Public Works and Government Services Canada

Travaux publics et Services gouvernementaux Canada

RETURN BIDS TO:
RETOURNER LES SOUMISSIONS À:
Bid Receiving
PWGSC
33 City Centre Drive
Suite 480
Mississauga
Ontario
L5B 2N5
Bid Fax: (905) 615-2095

SOLICITATION AMENDMENT
MODIFICATION DE L'INVITATION

The referenced document is hereby revised; unless otherwise indicated, all other terms and conditions of the Solicitation remain the same.

Ce document est par la présente révisé; sauf indication contraire, les modalités de l'invitation demeurent les mêmes.

Comments - Commentaires

Title - Sujet BLDG. MAINTENANCE SERVICES	
Solicitation No. - N° de l'invitation KW405-110691/A	**Amendment No. - N° modif.** 001
Client Reference No. - N° de référence du client KW405-11-0691	**Date** 2012-09-21
GETS Reference No. - N° de référence de SEAG PW-$TOR-212-5990	
File No. - N° de dossier TOR-1-34243 (212)	**CCC No./N° CCC - FMS No./N° VME**
Solicitation Closes - L'invitation prend fin at - à 02:00 PM on - le 2012-10-10	**Time Zone** **Fuseau horaire** Eastern Daylight Saving Time EDT
F.O.B. - F.A.B. **Plant-Usine:** ☐ **Destination:** ☑ **Other-Autre:** ☐	
Address Enquiries to: - Adresser toutes questions à: Shaw, Marian	**Buyer Id - Id de l'acheteur** tor212
Telephone No. - N° de téléphone (905) 615-2065 ( )	**FAX No. - N° de FAX** (905) 615-2060
Destination - of Goods, Services, and Construction: **Destination - des biens, services et construction:** DEPARTMENT OF THE ENVIRONMENT ADMINISTRATION NWRI 867 LAKESHORE ROAD, P.O BOX 5050 BURLINGTON, ONTARIO L7R 4A6	

Vendor/Firm Name and Address
Raison sociale et adresse du fournisseur/de l'entrepreneur

Instructions: See Herein

Instructions: Voir aux présentes

Delivery Required - Livraison exigée	**Delivery Offered - Livraison proposée**
Vendor/Firm Name and Address **Raison sociale et adresse du fournisseur/de l'entrepreneur** **Telephone No. - N° de téléphone** **Facsimile No. - N° de télécopieur**	
Name and title of person authorized to sign on behalf of Vendor/Firm (type or print) **Nom et titre de la personne autorisée à signer au nom du fournisseur/ de l'entrepreneur (taper ou écrire en caractères d'imprimerie)** **Signature**	**Date**

Issuing Office - Bureau de distribution

Public Works and Government Services Canada
Ontario Region
33 City Centre Drive
Suite 480
Mississauga
Ontario
L5B 2N5

Canada

Amendment Number 001 is being issued to make the following changes and provide questions and answers from the Mandatory Site Visit as well as provide answers to bidders questions received to date.

At TABLE OF CONTENTS, PART 5 - CERTIFICATIONS

Delete: 1. Code of Conduct Certifications - Consent to a Criminal Record Verification

Insert: 1. Code of Conduct Certifications - Certification Precedent to Contract Award

At Part 1 - GENERAL INFORMATION, At Article 2 Summary

Delete: Item (ii) in its entirety

Insert:

(ii) Period of Proposed Contract: The contract period will be for five (5) years estimated to start 1 December 2012 to 30 November 2017.

At PART 2 BIDDER INSTRUCTIONS

Delete: Article 1, Standard Instructions, Clauses and Conditions

Insert:

1. Standard Instructions, Clauses and Conditions

The 2003 (2012-07-11) Standard Instructions - Goods or Services - Competitive Requirements, are incorporated by reference into and form part of the bid solicitation.

The text under Subsection 4 of Section 01 - Code of Conduct and Certifications of 2003 referenced above is replaced by:

Bidders should provide, with their bid or promptly thereafter, a complete list of names of all individuals who are currently directors of the Bidder. If such a list has not been received by the time the evaluation of bids is completed, Canada will inform the Bidder of a time frame within which to provide the information. Failure to provide such a list within the required time frame will render the bid non-responsive. Bidders must always submit the list of directors before contract award.

Canada may, at any time, request that a Bidder provide properly completed and Signed Consent Forms *(Consent to a Criminal Record Verification form - PWGSC-TPSGC 229)* for any or all individuals named in the aforementioned list within a specified delay. Failure to provide such Consent Forms within the delay will result in the bid being declared non-responsive.

The text under Subsection 5 of Section 01- Code of Conduct and Certifications of 2003 referenced above is replaced by:

The Bidder must diligently maintain the list up-to-date by informing Canada in writing of any change occurring during the validity period of the bid, and must also provide Canada, when requested, with the corresponding Consent Forms. The Bidder will also be required to diligently maintain the list and when requested, provide Consent Forms during the period of any contract arising from this bid solicitation.

At Part 5 CERTIFICATIONS
Delete: Article 1, Code of Conduct Certifications - Consent to a Criminal Record Verification

Insert::
1. Code of Conduct Certifications - Certifications Required Precedent to Contract Award

1.1 Bidders should provide, with their bids or promptly thereafter, a complete list of names of all individuals who are currently directors of the Bidder. If such a list has not been received by the time the evaluation of bids is completed, the Contracting Authority will inform the Bidder of a time frame within which to provide the information. Bidders must submit the list of directors before contract award, failure to provide such a list within the required time frame will render the bid non-responsive.

The Contracting Authority may, at any time, request that a Bidder provide properly completed and Signed Consent Forms *(Consent to a Criminal Record Verification form - PWGSC-TPSGC 229)* for any or all individuals named in the aforementioned list within a specified delay. Failure to provide such Consent Forms within the delay will result in the bid being declared non-responsive.

At PART 7 - RESULTING CONTRACT CLAUSES

At Article 2.1 General Conditions
Delete: 2035 (2012-07-16), General Conditions - Higher Complexity - Services, apply to and form part of the Contract.

Insert:
2.1 General Conditions
2035 (2012-07-16), General Conditions - Higher Complexity - Services, apply to and form part of the Contract.

The text under Subsection 4 of Section 41 Code of Conduct and Certifications of 2030 referenced above is replaced by:

During the entire period of the Contract, the Contractor must diligently update, by written notice to the Contracting Authority, the list of names of all individuals who are directors of the Contractor whenever there is a change. As well, whenever requested by Canada, the Contractor must provide the corresponding Consent Forms.

At Article 4.1 Period of Contract
Delete: In its entirety
Insert:
4.1 Period of the Contract

The period of the Contract is from date of Contract (estimated to be 1 December 2012) to 30 November 2017 inclusive.

At Article 10, Priority of Documents
Delete: Item (b) in its entirety.

Insert: (b) the general conditions 2035 (2012--07-16) General Conditions - Higher Complexity - Services

At Annex A, STATEMENT OF WORK

At Article 8 Corrective Maintenance Work

Add:	Drafting Services	100 hours
	Professional Electrical Engineer(s)	30 hours
	Electrical Power Systems Coordinator	30 hours

At Appendix II - Scheduled Maintenance Specifications

At PM#4A

Add: Replacement of three Lead filters quarterly (Ships wing, Wildlife live room sink, and 4th floor south)

At PM#12

ADD: An annual inspection to be performed and an annual NDT (Non Destructive Test) by a qualified person.

At PM#15

Add: Thermographic Inspection Equipment List, which is attached.

At PM#17B

Delete: List PM#17B provided at the mandatory site visit.
Insert: List PM# 17B Heating Systems Pumps List which is attached.

At PM#18

Delete: 3. Replace belt as required and hand in old belt to TMU recording exhaust fan serviced
Insert: 3. Replace belt and hand in old belt to TMU recording exhaust fan serviced

At PM#20, At Seasonal Shut-down - November (Before chillers are taken off-line)

Delete: 4. Clean condenser tube bundles and provide eddy-current inspection of condenser tubes. Submit written report indicating results.
Insert: 4. Provide eddy-current inspection of the condenser and evaporator tubes. Submit written report indicating results.

At PM#26 Refrigeration Systems (capacity 5.4 tons/19 KW and up) Annual Leak Check:

Delete: Item 1 in its entirety.
Insert: 1. Conduct a leak test of all of the components of the refrigeration systems or air-conditioning systems listed here that come into contact with a halocarbon.

At PM#27

Delete: The word “three” in the first sentence before packaged.

At PM#32, at Item 1 first sentence

Delete: 28
Insert: 42

At PM#38, at Item 2

Delete: Include lubrication, replacement of belts and filters, cleaning of coils and seasonal start-ups.
Insert: Include leak test, lubrication, replacement of belts and filters, cleaning of coils and seasonal start-ups.

At Annex B, BASIS OF PAYMENT
At Year 1, Year 2, Year 3, Year 4 and Year 5

Delete: **YEAR 1: From 01 October 2012 to 30 September 2013**
YEAR 2: From 01 October 2013 to 30 September 2014
YEAR 3: From 01 October 2014 to 30 September 2015
YEAR 4: From 01 October 2015 to 30 September 2016
YEAR 5: From 01 October 2016 to 30 September 2017

Insert: **YEAR 1: From 01 December 2012 to 30 November 2013**
YEAR 2: From 01 December 2013 to 30 November 2014
YEAR 3: From 01 December 2014 to 30 November 2015
YEAR 4: From 01 December 2015 to 30 November 2016
YEAR 5: From 01 December 2016 to 30 November 2017

At Article 1.3 Corrective Maintenance Work: On an As and When Requested Basis - Tasks Authorization (TA)

ADD the following Trades Person to Year 1, Year 2, Year 3, Year 4 and Year 5

Trades Person	Firm Hourly Rate - Regular Hours	Firm Hourly Rate - Overtime (Mon-Sat)	Firm Hourly Rate - Sunday and Statutory Holidays
16. Drafting Services	$	$	$
17. Professional Electrical Engineer(s)	$	$	$
18. Electrical Power Systems Coordinator	$	$	$

At Article 1.4 Mark-Up
Delete: Item b) in its entirety.

Insert:
b) Mark-up, if any, on services, equipment and materials from subcontractors used in the facility in the performance of the Work. _____ %

At Annex F, EVALUATION CRITERIA

At Article 1.1. Mandatory Technical Criteria, Item 2
Delete d) On-Site Electrical Power Systems Co-ordinator

Insert: d) Electrical Power Systems Co-ordinator

At Annex G, CALCULATION OF PRICE FOR EVALUATING PURPOSES ONLY
At Year 1, Year 2, Year 3, Year 4 and Year 5

Delete: **YEAR 1: From 01 October 2012 to 30 September 2013**
YEAR 2: From 01 October 2013 to 30 September 2014
YEAR 3: From 01 October 2014 to 30 September 2015
YEAR 4: From 01 October 2015 to 30 September 2016
YEAR 5: From 01 October 2016 to 30 September 2017

Insert: **YEAR 1: From 01 December 2012 to 30 November 2013**
YEAR 2: From 01 December 2013 to 30 November 2014
YEAR 3: From 01 December 2014 to 30 November 2015
YEAR 4: From 01 December 2015 to 30 November 2016
YEAR 5: From 01 December 2016 to 30 November 2017

At Article 1.3 Corrective Maintenance Work:
ADD the following Trades Persons to Year 1, Year 2, Year 3, Year 4 and Year 5

Trades Persons	Estimated No. Hours	Firm Hourly Rate Regular Hours	Extended Price
16. Drafting Services	100	$_____	$_____
17. Professional Electrical Engineers	30	$_____	$_____
18. Electrical Power Systems Coordinator	30	$_____	$_____

At Year 1, Year 2, Year 3, Year 4 and Year 5

Delete: **Total for Item 1.3 (Sum of Extended Prices 1 through 15)**

Insert: **Total for Item 1.3 (Sum of Extended Prices 1 through 18)**

<u>Questions and Answers from Mandatory Site Visit and Bidders Conference</u>

Q1. Pricing, Annex B - will you be sending a revised document to reflect the new start date? Is it available in Excel?
A1. Annex B will not be amended to reflect the new start date. The revised start date of December 1, 2012 is an estimated date only. The contract when issued will reflect the actual start date. Annex B is not available in excel.

Q2. SOW, page 25 under General Lighting - can this work be done during working hours?
A2. The lights that need to be changed in the building are approximately 3,000 per year and 300 ballasts. Sometimes ballasts can be quite high, therefore a lift may be required. Environment Canada (EC) has their own lift, which can be used by the Contractor as long as the Contractor is certified. Work is to done during working hours. EC pays for ballasts and bulbs, however, the contractor is responsible for replacement work.

Q3. Who is responsible for disposal of ballast?
A3. There is a light bulb eater in the building which crushes the old bulbs, however the contractor is responsible for disposal of the drum. Ballast disposal will be the responsibility of the contractor.

Q4. Is there any PCB ballast in the building?
A4. No PCB ballasts in the building but if any come up, a corrective work order will be put in to cover the disposal.

Q5. Is there any bid bond required?
A5. No bid bond is required.

Q6. Drinking Fountain - is EC supplying the filters?
A6. No. Contractor will be required to supply filters.

Q7. What reports are to be generated?
A7. This is part of the PM Maintenance List. Reports are required for each PM.

Q8. What is the schedule for the PM?
A8. The schedule is detailed in the SOW.

Q9. #26 -it reads 9 months instead of annually - is this a typo?
A9. No. EC would like this done every 9 months as per the SOW to ensure federal halocarbons requirements are met.

Q10. Is there any PM for the dock leveler in the warehouse?
A10. No, this is not included as it is not part of the requirement.

Q11. Are all 110 Electrical panel labeled?
A11. Some are labeled. Some will need to be updated and this will be the contractors responsibility. Work can be done Saturday and Sunday or after hours

Q12. When is work to be done(for corrective maintenance only)?
A12. Mostly done during working hours unless specified in the TA to be done after h.

Q13. What are normal working hours?
A13. Normal working hours are 07:00 to 17:00 hours.

Q14. Is there a BAS system?
A14. This is a separate contract

Q15. Is there any shutdown in the summer?
A15. No.

Q16. #15 - Can we have a copy of Thermography and vibration report?
A16. Yes list of items to be scanned is provided, which is attached.

Q17. Is it possible to get a copy of the PM report as a sample?
A17. No, as it is a fairly large document. As an example refer to PM#7 list provided at site visit

Q18. Who supplies the belts for the roof fans?
A18. The contractor is responsible for supplying the belts.

Q19. PM#38 - Does EC provide oils and lubricants for refrigeration?
A19. The contractor is responsible for oils and lubricants.

Q20. PM #22 - Volt Distribution Panels - 1/3 of panels to be done at a time - is work to be done after hours?

A20. There are 400 panels around complex. This work will have to be done after normal working hours or on weekends.

Q21. What are the lock out procedures?

A21. It can be ECs procedures or the contractors procedures. However EC will specify this to the contractor.

The following Equipment Lists were provided to Bidders at the Site Visit:

PM#7 CCIW Air Handlers Reference List
#6A Cogen Cooling Tower
#6B Chiller Cooling Towers
Unit Heaters Locations PM#16
PM #17B Heating Systems Pump
Roof Fans Locations PM#18
PM#28 Compressed Air Systems Service Stock List
PM#33 Lifting Devices Inspection List
PM$34 Administration and Lab Building
PM#38 Refrigeration and Air Conditioning Systems

The following Equipment Lists are provided and attached to this amendment:

List PM# 17B Heating Systems Pumps List.
PM# 15 Thermographic Inspection Equipment List
Sample of Vibration Report
Critical Power Panels, Single Line Diagrams
Life Safety Panels, Single Line Diagram
Main Single Line Drawings
Admin & Lab R&D Boiler Room & Chiller Distribution, Single Line Diagram

Questions and Answers received to date

Q1 Who is the current incumbent service provider?

A1. Rondar Inc. Is the current contractor.

Q2. Who currently provides the janitorial, roads and grounds, elevator, fire detection/suppression and gas detection maintenance/annual certification at this facility and does the possibility exist for these services to be rolled into this contract? Are these services currently coordinated and managed by the TMU?

A2. No, these services will not be rolled into this contract.

Q.3 Summary (ii) Pg 4 of 51. The contract period is from 01 Oct, yet the solicitation only closes on the 10 Oct. Allowing time for your bid evaluation, notice of award/negotiations, mobilization and ramp-up should the contract start date not occur later this year?

A3. The contrct start date has been revised to read December 1, 2012, however, this is an estimated date only. The contract when issued will reflect the actual start date.

Q4. Part 7, 1.2.4 Periodic Usage Reports Pg 13 of 51. Is it possible to provide past usage reports (last 2 or 3 years) to provide an idea of the types of work, value of materials, types of rental equipment and if there is a annual pattern to the issuance of TA work? If the Usage Report is a new contract requirement this data can be provided in any other usable format

A4. The amount of hours under each trade is estimated at Annex A, Article 8 Corrective Maintenance Work. Work will fluctuate and is not guaranteed to be given to the on-site contractor.

Q5. Part 7, 6.2, 1. Limitation of Expenditure Pg 15 of 51. Can you provide the past total annual value of TA completed in 2011, 2010 and 2009?

A5. Please refer to the estimates provided at Annex A, Article 8 Corrective Maintenance Work.

Q6. Annex A, 4 Reporting & Records pg 2 of 46. Does the TMU current use a Computerized Maintenance Management System (CMMS) to manage equipment inventory, work history and current work status? What system is being used?

A6. The current system we use for corrective work is Access and is for TMU use only

Q7. Annex A, 5 General Requirements Pg 3 of 46. Is there any way to quantify how much monthly planned work is done outside of normal working hours per year?

A7. Work done after hours for the corrective work will vary depending on the work. For the scheduled maintenance, after hours work will be mostly for the annual shut-down and PM#22.

Q8. Annex A, 5 General Requirements Pg 3 of 46 and also Section 9.5 Specifications & Plans pg 5 of 46. There is mention of performing work for other tenants. Can historical values for this work be provided for the last 3 years? Are these other tenants government or are they private industry and can a list be provided?

A8. Most of the tenants are government departments within the building. Tenants make their own payment which is not charged against this contract. No estimates are available.

Q9. Annex A, 5 General Requirements Pg 3 of 46. What format are the existing drawings and O&M manuals, AutoCAD, mylar, MSWord or hard copy etc? Since there is no labour charge out rate for this service should one be provided for drafting services, or should it be included in the firm monthly rate? Can an estimated quantity of changes per year be provided.

A9. Existing drawings are in AutoCAD. We have added drafting services to the trade list for approximately 100 hours annually. Please refer to changes to the RFP detailed above.

Q10. Annex A, 9.6 Labour Rates. Will the requirements (no tool charges, no vehicle charges, no travel time charges) specified for contractor staff be extended to subcontractors when they are used to provide low volume specialized services on an unscheduled basis, for instance during an emergency call out?

A10. No, requirements will not be extended to subcontractors.

Q11. Annex A, D2 and Appendix I. Can additional equipment details (make/model/quantities) and a site plan and building drawings that show the location of the equipment be provided?

A11. Equipment lists were provided at the site visit.

Q12. Annex F, 1.1 Mandatory Technical Criteria, 2. The evaluation criteria states Professional Electrical Engineers and On-Site Electrical Power Systems Coordinator, however neither Appendix I or II call up these position requirements. Furthermore Annex B Basis of Payment does not provide for these positions unless they are rolled into the annual shut-down and/or firm monthly rate.

A12. The positions should be available on an as required basis but don't have to be on site. These position have been added to the trades as detailed in the revision above.

Q13. Annex B, Basis of Payment 1.4 Mark-Up, a). Can we indicate separately the contractors mark-up on materials provided by subcontractors in the provision corrective maintenance work on TA's.

A13. The contractors mark up on subcontractors should be on the total subcontractors invoice.

Q14. Does the contractor or the TMU coordinate with Ontario Hydro and/or the local municipality for the high voltage shut-down and who pays the corresponding fees?

A14. Scheduling and fees will be the responsibility of the contractor.

Q15. Can current single line electrical drawings be provided for bidding?

A15. Yes. Drawings are attached.

Q16. Can a past annual electrical report be provided as an example of the format, extent of information etc., for bidding.

A16. The SOW details what is needed for the reports. The amount of equipment is provided in the single line drawings.

Q17. The RFP closing date is stated as Oct. 10, 2012 @ 02:00pm on page 1 of 51 of the document. The contract start date is stated as (estimated) to start Oct. 1, 2012 in Part 1, General Information Section 2.(ii). Please confirm the RFP closing date.

A17. The contract start date has been revised as detailed in the changes above. There is no change to the RFP closing date.

Q18 We would like to return on site with our HVAC subcontractor and our Substation Maintenance Provider to review the site - who can we contact to arrange a 1 hour tour ?

A18. The Mandatory Site Visit was held on September 11, 2012. Bidders will not be given another appointment.

Q19. Please advise if Glycol and Refrigerant supply costs for the HVAC equipment category are to be included or if it is an extra to this maintenance proposal.

A19. Under **PM#39** Glycol loops, it states that the contractor will be using building stock for glycol. **PM#38** heading 2 we are changing it to read: include leak test, lubrication, replacement of belts and filters, cleaning of coils and seasonal start-ups. Which means the leak test will be included but if refrigerant is needed, it will be covered under a corrective work order.

All other terms and conditions remain unchanged.

PM# 17B HEATING SYSTEMS PUMPS

	PUMPS	LOCATION	# OF PUMPS	Comments
1	A&L HW	A&L 3rd	2	
2	A&L Glycol	A&L 3rd	2	
3	Induction	A&L 3rd	1	
4	A&L Rad	A&L 3rd	1	
5	A&L Terminal Reheat	A&L 3rd	1	
6	System#21	A&L 3rd	1	
7	System#27	A&L 3rd	2	
8	System#28	A&L 3rd	2	
9	System#31	A&L 3rd	4	
10	A&L CONDENSATE	A&L 3rd	2	
11	Ultra Trace Glycol	A&L PH	2	
12	Cogn HX PH	A&L PH	1	
13	System#2	R&D PH	1	
14	System#4	R&D PH	1	
15	W.W Rad	R&D PH	1	
16	W.W Unit Heater	R&D PH	1	

17	System#6 Reheat	R&D PH	1	

	PUMPS	LOCATION	# OF PUMPS	Comments
18	R&D Rad Zone	R&D PH	1	
19	R&D HW	R&D PH	2	
20	R&D Glycol	R&D PH	2	
21	Ecotox Glycol	R&D PH	1	
22	System#3	R&D PH	1	
23	System#5	R&D PH	1	
24	R&D CONDENSATE	R&D PH	2	
25	SYSTEM#1	R&D PH	2	
26	System#11	W.W Roof	1	
27	System#12	W.W Roof	1	
28	System#41HCP	H246	1	
29	HYD Rad CP	H246	1	
30	HYD Lab RHTP	H246	1	
31	System#53	WTC	1	
32	System#55	WTC	1	
33	System#56	WTC	1	

34	System#57	WTC	1	
35	WTC Glycol	WTC PH	2	P105,P106
36	WTC RAD	WTC PH	1	

	PUMPS	LOCATION	# OF PUMPS	Comments
37	WTC HCP	WTC PH	1	
38	WTC DHW CIRC	WTC PH	1	
39	WTC CONDENSATE	WTC BASEMENT	2	
40	COGN P1	BOILER ROOM	1	
41	FEEDWATER	BOILER ROOM	3	
42	CONDENSATE	BOILER ROOM	2	
43	DHW CIRC	BOILER ROOM	1	

Thermographic Inspection Equipment List

Outdoor Substation
Main Incoming Pole
Outdoor Main Switchgear
Main Transformers
Cable from Transformer to Main Substation
Boiler Room Substation – Main 600V Distribution T1 & T2
A&L Main Distribution
Critical Power Supply – 1
Life Safety Splitter – 1
R & D Distribution
Capacitor Distribution
Main T1
Chiller Distribution
Main T2
Boiler Room Distribution
Chiller Distribution
R & D
A & B Main Disconnect
Capacitor Distribution
Synchronizing Breaker
Portable Generator
Co-Gen Breaker
Main Critical Power Panel CCP – 1
Life Safety Splitter # 1
Boiler Room Substation – Main 600V Distribution Substation New Boiler SWBD
Hydraulics Lab Bus Duct
Spare
MCC-1
Tie Breaker
Hydraulics Lab MCC-9
Boiler Room Distribution Panel
Panel DPW
Main Critical Power Panel CPP-1
Critical Power Panel CPP-2
T1 A – Capacitor Bank & FD's
T1 B – Capacitor Bank & FD's
T2 A – Capacitor Bank & FD's
T2 B – Capacitor Bank & FD's
Life Safety Splitter # 1
Life Safety Panel 1 – LSP 1
Life Safety Panel 2 – LSP 2
30kVA TX Panel 2 – LSP 2
120 / 208V Distribution Panel 2 – LSP2
Boiler Room 120 / 208V Distribution
Exhaust Fan RFX – 1 1.5 HP
Boiler Room Floor
Boiler 1 Square D FD by Control, 600V 3Ø 30A
Boiler 2 Square D FD by Control, 600V 3Ø 30A
Boiler 3 Square D FD by Control, 600V 3Ø 30A
Funas 1 Panel, 600V 3Ø 600A
Funas 2 Panel, 600V 3Ø 600A
Main Breaker 1, 600V 3Ø 600A
Main Breaker 2, 600V 3Ø 600A
Tie Breaker, 600V 3Ø 1,600A
Chiller 1, 600V 3Ø 1,600A
Chiller 2, 600V 3Ø 1,600A
Circulating Pump # 2
Circulating Pump # 1
MCC1 Various Starters

Thermographic Inspection Equipment List

MCC1A Various Starters

Thermographic Inspection Equipment List

Boiler Room Lower Level
Fire Pump Control, 600V 3Ø 150A 50HP
Splitter, 600V 3Ø 100A
Square D FD 1, 600V 3Ø 60A
Square D FD 2, 600V 3Ø 60A
Square D FD 3, 600V 3Ø 60A
ITE FD No. Identification, 600V 3Ø 60A
LP-BD
MCC2 Various Starters
MCC101 Various Starters
Boiler Room West Wall
Moeller FD EF 606, 600V 3Ø 30A
Moeller FD EF 607, 600V 3Ø 30A
Moeller FD EF 608, 600V 3Ø 30A
Moeller FD EF 609, 600V 3Ø 30A
Boiler Room South Wall
Air Compressor # 1
Air Compressor # 2
Air Compressor # 3
460V Splitter
1,125kVA 600 / 460 Transformer
Square D 600V 200A Switch
112kVA Transformer 600 / 460V
Splitter
Square D 60A Switch
Boiler Room – Upper Level North Wall
R.O. Feed
R.O. Central Panel
PP2
PP3
Boiler Room – Upper Level East Wall
LP-B3
30kVA 30A FPE Disconnect
30kVA Transformer
Hydraulic Area
Power Panel No. 1, 600V 3Ø 200A
Westinghouse
FPE LP, 120 / 208V
LP 600 / 347V, 225A
Hammond 45kVA Transformer, 600V 3Ø 347V
2nd Floor H246
150kVA Transformer, 600V 3Ø 347V
LDP1 Various MCB, 120 / 208V 800A
LP 1K, 110 / 208V 100A
Relay Panel – R9
Square D FD No. Identification, 600V 3Ø 30A
MCC 9 Various Starters
New Wet Lab Mezzanine
CB-1
P1
Panel DPW
400A Transfer Switch
Panel DPEWL
SF-1
EF-1
Panel-EFA
Panel-EPA
75kVAT x 600/208
EF-2

Thermographic Inspection Equipment List

P-2
SF1-P3C
SF1-P4C
Panel 1G
Panel 1F
Fed from Panel LP-EPA
Cooler 2
Cooler 1
R & D Substation
MCC 3 Breaker, 600 3Ø 600A
WW 450kVA Transformer Breaker, 600V 3Ø 600A
Main Breaker 1, 600V 3Ø 800A
MCC 4 Breaker, 600V 3Ø 600A
Tie Breaker, 600V 3Ø
Main Breaker 2, 600V 3Ø 800A
Spare
Main 600V WW Breaker, 600V 3Ø 600A
R & D 450kVA Transformer North Wall
Main 600V Workshop Warehouse Distribution Panel
WW 450kVA Transformer, 600V 3Ø 120/208V
MIRUS 75kVA Transformer LP-R8, 208V 208A
MIRUS 75kVA Transformer LP-R1, 208V 208A
FPE Panel 600V Distribution, 600V 3Ø 100A LSP-3
45kVA Transformer 600 – 208Y / 120 LSP-3
200A Contactor for Critical Power Panel CPP – 3
R & D Critical Power Panel CPP – 3
TX for CRP – 2 600 / 208V
Panel CRP – 2 120 / 208V
200A 120 / 208V Distribution LSP-3
R & D 450kVA Transformer, 600V 3Ø 120 / 208V
FPE Panel R & D North End, 120 / 208V 1,600A
MCC3 Various Starters
R & D Penthouse Outside Substation
Siemens FD
Hammond 45kVA Transformer, 600V 3Ø 120 / 208V
R & D Penthouse Centre
Siemens FD R245 Power Panel, 208V 3Ø 200A
Moeller KM0080W21102D, 209V 3Ø 222A
Siemens UPS 208 Power Supply, 208V 3Ø 400A
FP 208 UPS Main Power, 208V 3Ø 400A
BEL Splitter, 600V 400A
Siemens FD No Identification, 208V 3Ø 60A
Siemens Load Centre Panel, 120 / 240V 3Ø 100A
Hammond Transformer, 600V 3Ø 120 / 208V 3Ø
Square D – R245 UPS
R & D Penthouse South End
Square D FD, 600V 3Ø 100A
FP FD Chiller # 2, 600V 3Ø 100A
FP FD Hot Water Circulating Pump, 600V 3Ø 30A
FP FD Circulating Pump 1, 208V 3Ø 30A
FP FD Circulating Pump 2, 208V 3Ø 30A
Square D FD Cold Water Recirculating, 600V
CEL Splitter, 208V 3Ø 225A
MCC4 Various Starters
Administration and Lab Substation – Main 600V Switchboard
MCC No. 7 Breaker, 600V 3Ø 600A
South Distribution Breaker 600V 3Ø 1,600A
Main Breaker Supplied from Transformer 1,600V 3Ø 1,600A
MCC 8 Breaker, 600V 3Ø 600A

Thermographic Inspection Equipment List

Tie Breaker, 600V 3Ø 1,600A
Main Breaker supplied from Transformer 2,600V 3Ø 1,600A
PP1 Breaker, 600V 3Ø 600A
Main Lac Emergency Distribution, 600V 3Ø 600A
MCC 6 Breaker, 600V 3Ø 1,600A
North Distribution Breaker, 600V 3Ø 1,600A
Administration and Lab Substation – 120/208 South Distribution – Life Safety Pan
LSP-4 600V 400A Distribution
Emergency North 150kVA 600 / 208Y / 120 Transformer
Emergency North 120 / 208 800A Distribution
Disconnect 1
Disconnect 2
Splitter
112kVA Transformer fed from MCC8
LDP-1, 2, 3 & 4
Main Disconnect for UPS for L727
LDP1 South West Breaker, 600V 3Ø 1,600A
LDP2 South East Breaker, 600V 3Ø 1,600A
208V Bus Duct South East Breaker, 600V 3Ø 600A
208V Bus Duct South West Breaker, 600V 3Ø 600A
1,000kVA Transformer, 600V 3Ø 120/208V
208V Bus Duct North East Breaker, 600V 3Ø 600A
400A Contactor 600V Feed for Critical Power Panel CPP – 4
A & L Critical Power Panel CPP – 4
CRP – 3 600V – 120 / 208V TX
Panel CRP – 3
LDP3 North West Breaker, 600V 3Ø 1,600A
LDP4 North East Breaker, 600V 3Ø 1,600A
208V Bus Duct North West
Administration and Lab – 3rd Floor
Siemens FD Atlas Compressor 1, 600V 3Ø 60A
Siemens FD Compressor 3, 600V 3Ø 60A
MCC6 Various Starters
MCC7 Various Starters
MCC8 Various Starters
Administration and Lab– 3rd Floor Outside Substation
Siemens FD Computer Room Emergency, 600V 3Ø 200A
Siemens FD LP 1P Training Room, 600V 3Ø 60A
Square D Compressor Room Power Supply, 600V 3Ø 100A
Splitter, 600V 3Ø 400A
75kVA Transformer, 600V 3Ø 120 / 208V
4th Floor North Service Corridor
West Bus Duct, 600V 3Ø
East Bus Duct, 600V 3Ø
Panel LDP – E2, 120 / 208V 3Ø 225A
4th Floor South Service Corridor
West Bus Duct, 600V 3Ø
East Bus Duct, 600V 3Ø
Panel LDP – E1, 120 / 208V 3Ø 225A
Penthouse
FPE Panel LDP – 8, 120 / 208V 3Ø
LP-8A, 120 / 208V 3Ø
Panel – E1, 600V 3Ø 225A
Westinghouse 225kVA Transformer, 600 / 208V 3Ø
Square D FD EF 154, 208V 3Ø 30A
FPE FD for MCC BJ. 208V 3Ø 60A
Cutler Hammer FD EF 107A, 1,208V 3Ø 30A
FPE FD for MCC B1, 208V 3Ø 60A
FPE FD for MCC BH, 208V 3Ø 60A

Thermographic Inspection Equipment List

FPE FD for MCC BH, 208V 3Ø 60A
FPE FD for MCC BF, 208V 3Ø 60A
Square D FD EF 26C, 208V 3Ø 30A
FPE FD EF 136, 208V 3Ø 30A
FPE FD for MCC BA, 208V 3Ø 30A
Square D FD EF 27A, 208V 3Ø 30A
FPE FD EF 164, 208V 3Ø 30A
FPE FD for MCC BB, 208V 3Ø 30A
Square D EF 137, 208V 3Ø 30A
Westinghouse FD EF 146, 208V 3Ø 30A
FPE FD for MCC BC, 208V 3Ø 60A
Westinghouse FD EF 147, 208V 3Ø 30A
FPE FD for MCC BD, 208V 3Ø 60A
Square D FD EF 47 / L634, 208V 3Ø 30A
Square D FD EF 17D, 208V 3Ø 30A
FPE FD EF 17D, 208V 3Ø 30A
FPE FD for MCC AD, 208V 3Ø 60A
Square D FD EF 167, 208V 3Ø 30A
Square D FD EF 17B, 208V 3Ø 30A
Westinghouse FD EF 166 / L730, 600V 3Ø 30A
Square D FD EF 16B, 208V 3Ø 30A
Square D FD EF 16, 208V 3Ø 30A
Square D FD EF 138, 208V 3Ø 30A
FPE FD for MCC AC, 208V 3Ø 60A
Square D FD EF 134, 208V 3Ø 30A
FPE FD for MCC AB, 208V 3Ø 60A
AB FD EF 4 / L407, 208V 3Ø 15A
FPE FD for MCC AA, 208V 3Ø 60A
Klockner Moeller EF2, 208V 3Ø 15A
Panel HVP – 8A, 600V 3Ø
FP FD for MCC AE, 208V 3Ø 60A
FP FD EF 132, 208V 3Ø 30A
FP FD EF 54, 208V 3Ø 30A
FP FD for MCC AF, 208V 3Ø 60A
Rex. Transformer 600/208V 3Ø 60A
FP FD for MCC AG, 208V 3Ø 60A
Cutler Hammer FD, 208V 3Ø 30A
FP FD for MCC AH, 208V 3Ø 60A
FP FD for MCC AI, 208V 3Ø 60A
Cutler Hammer FD P1, 208V 3Ø
FPE Disconnect for MCC AJ, 208V 3Ø 60A
Cutler Hammer FDUT EF1 EFC 4500 0P09, 600V 3Ø
Cutler Hammer FD P2, P3, 208V 3Ø
FPE Disconnect for MCC AK, 208V 60A
Square D FD EF 153, 208V 3Ø 30A
FPE FD for MCC BL, 208V 3Ø 60A
FPE FD for MCC BK, 208V 3Ø 60A
Square D FD EF 152, 208V 3Ø 30A
EF-19 L604
EF-18 L404
LP-8E Bk10
LP-8E
PP-E1
AI – Booster Supply Fan North
BI – Booster Supply Fan South
LI-ED35A Zone 3
Interconnecting Wiring
EI-EF17A Zone 2
FI-EF42A Zone 1 & 2

Thermographic Inspection Equipment List

GI-EF47A Zone 1
HI-EF48A
Transformer Westinghouse 30kVA 600 208/1120
MCC AA Various Starters
MCC AB Various Starters
MCC AC Various Starters
MCC AD Various Starters
MCC AE Various Starters
MCC AF Various Starters
MCC AG Various Starters
MCC AH Various Starters
MCC AI Various Starters
MCC AJ Various Starters
MCC AK Various Starters
MCC BA Various Starters
MCC BB Various Starters
MCC BC Various Starters
MCC BD Various Starters
MCC BE Various Starters
MCC BF Various Starters
MCC BG Various Starters
MCC BH Various Starters
MCC BI Various Starters
MCC BJ Various Starters
MCC BK Various Starters
MCC BL Various Starters
Machine Shop Area
Panel WWDP – 1, 120 / 208V 3Ø 800A
Panel WWDP – 2, 600V 3Ø 800A
Hammond 45kVA Transformer, 600V 3Ø 347V
347 LP, 347 / 600V 225A
MCC 5 Various Starters
Machine Shop Room W108
Fed from WWDP-1 FD's
LP-W3
LP-W3 Contactor
EF-412
EF-415
Fed from WWDP-2
Boat Shop Overhead Door
PP-W3
Panel PP – W2, 600V 3Ø 400A
FPE Switch, 600V 3Ø 400A
FPE FD, 120 / 208V 3Ø 200A
LP – W2, 120 / 208V 3Ø 225A
Machine Shop 107-B
LPW4A
LP-W4 FD's
LP-W4
PP-W4 FD's
PP-W4
Warehouse
Feeder WW Main 600V Disconnect
Tx No. 1 Finger Docks Disc. No. 8
Tx No. 2 Finger Docks Power
Tx No. 3 Finger Docks Disc. No. 7
Feeder PP WB
LR-W14
PP-W8

Thermographic Inspection Equipment List

Splitter
Boat Shop
PP – W5 Disconnect, 600V 3Ø 400A
Panel PP – W5, 600V 3Ø 400A
Wall Mount Transformer, 600V 3Ø 120 / 240V
LP – W5, 120 / 240V 100A
FPE FD No Identification, 240V 100A
FPE FD, 600V 3Ø 30A
LP – W6, 120 / 240V 225A
2nd Floor Electrical Room W230
WW Disconnect Panel 1, 120 / 208V 600A
Rex 225kVA Transformer, 600V 3Ø 120 / 208V
WW PP1, 600V 3Ø
Rex 45kVA Transformer, 600V 3Ø 120 / 208V
Panel D, 208 208/225A
Emergency Power WWE6 208 / 120V 3Ø
MCC 12 Various Starters
MCC 13 Various Starters
2nd Floor Electrical Room W245
45kVA Transformer, 600V 3Ø – 208 / 120V
Siemens FD W239EF, 240V 3Ø 30A
Siemens FD W251A, 600V 3Ø 30A
Siemens FD W251B, 600V 3Ø 30A
Siemens FD, 600V 3Ø 30A Compressor # 1
Siemens FD W236 EF, 240V 3Ø 30A
Siemens FD W239 EF, 240V 3Ø 30A
Siemens FD W238 EF, 240V 3Ø 30A
Square D FD, 600V 3Ø 60A
2nd Floor Electrical Room W245 (Within W250)
MCC 14 Various Starters
Waste Water Technology Centre (WTC)
PDF-1 Switchboard
600V Distribution
Life Safety Panel Transfer Switch
WTC Penthouse Life Safety Panel LSP-5 600V 225A
Tx for LP-E LP-EB 600V 120/208V LSP-5
Marcus Transformer 150kVA 600V 208/120
60A Disc. Ground Floor WTC High Bay Splitter
200A Contactor 600V Feed WTC Penthouse Critical Power
200A Disc.
Exhaust Fan No. 2 West Strobic No. 1
Exhaust Fan No. 1 West Strobic No. 1
Map Pilot Plant Mezz.
Sewage Pumps
Panel UP
Control Panel for Condensate Pump No. 1 & No.2 in Tunnel WTC
Panel LP-E2 Zenon Pump
Spare
WTC Penthouse Critical Power CPS-5
WTC Penthouse East Side
MCC 11 Various Starters
Outside H-241
Supply Fan S3
Return Fan S3
Splitter for S3
Relay panel R10
Splitter for Relay Panel R10

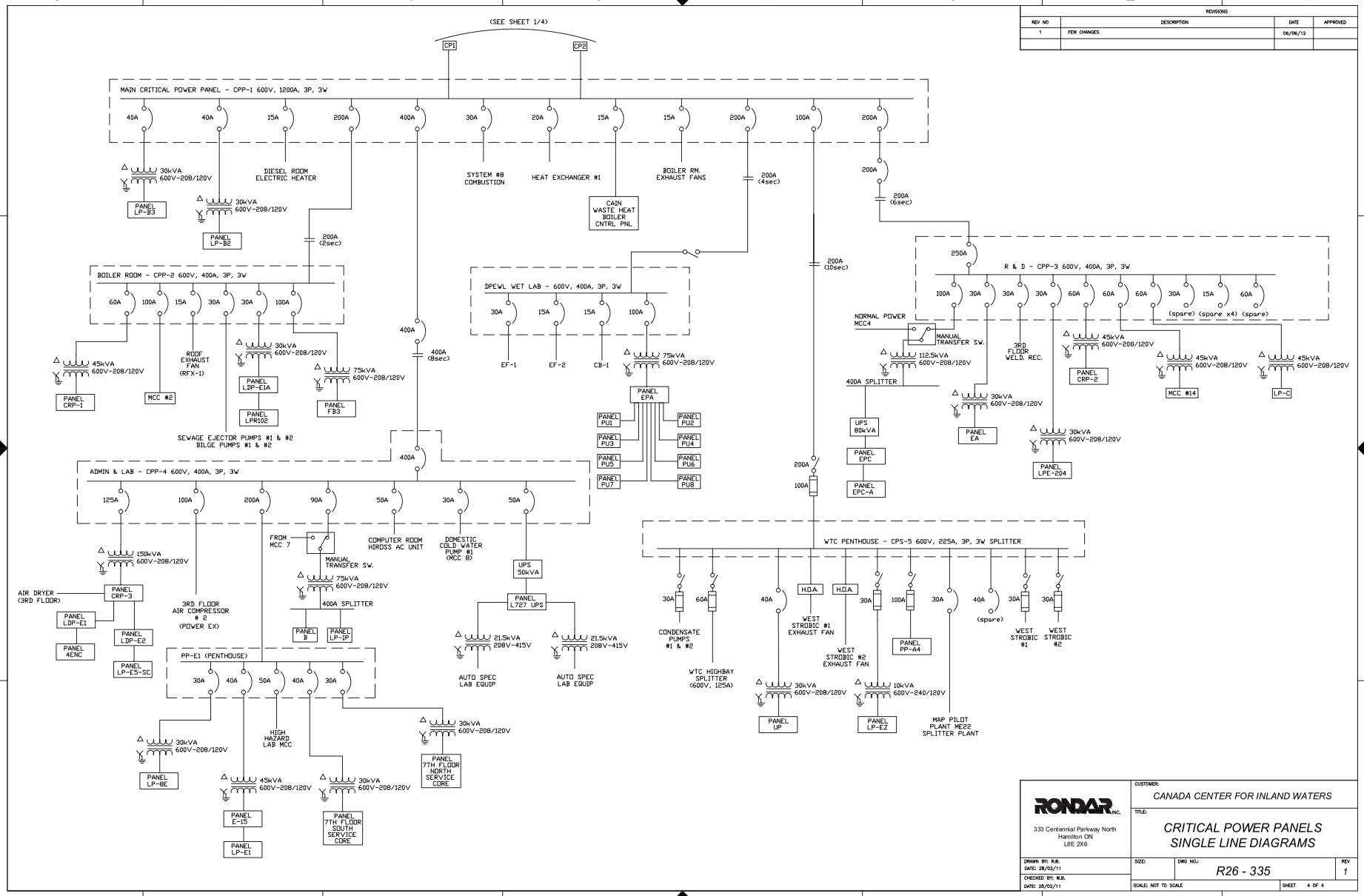

REVISIONS			
REV NO	DESCRIPTION	DATE	APPROVED
1	FEW CHANGES	06/06/12	

RONDAR INC.
333 Centennial Parkway North
Hamilton ON
L8E 2X6

DRAWN BY: R.B.
DATE: 28/02/11
CHECKED BY: W.B.
DATE: 28/02/11

CUSTOMER: CANADA CENTER FOR INLAND WATERS

TITLE: CRITICAL POWER PANELS SINGLE LINE DIAGRAMS

SIZE:
DWG NO.: R26 - 335
REV 1
SCALE: NOT TO SCALE
SHEET 4 OF 4

REVISIONS			
REV NO	DESCRIPTION	DATE	APPROVED
1	FEW CHANGES	06/06/12	

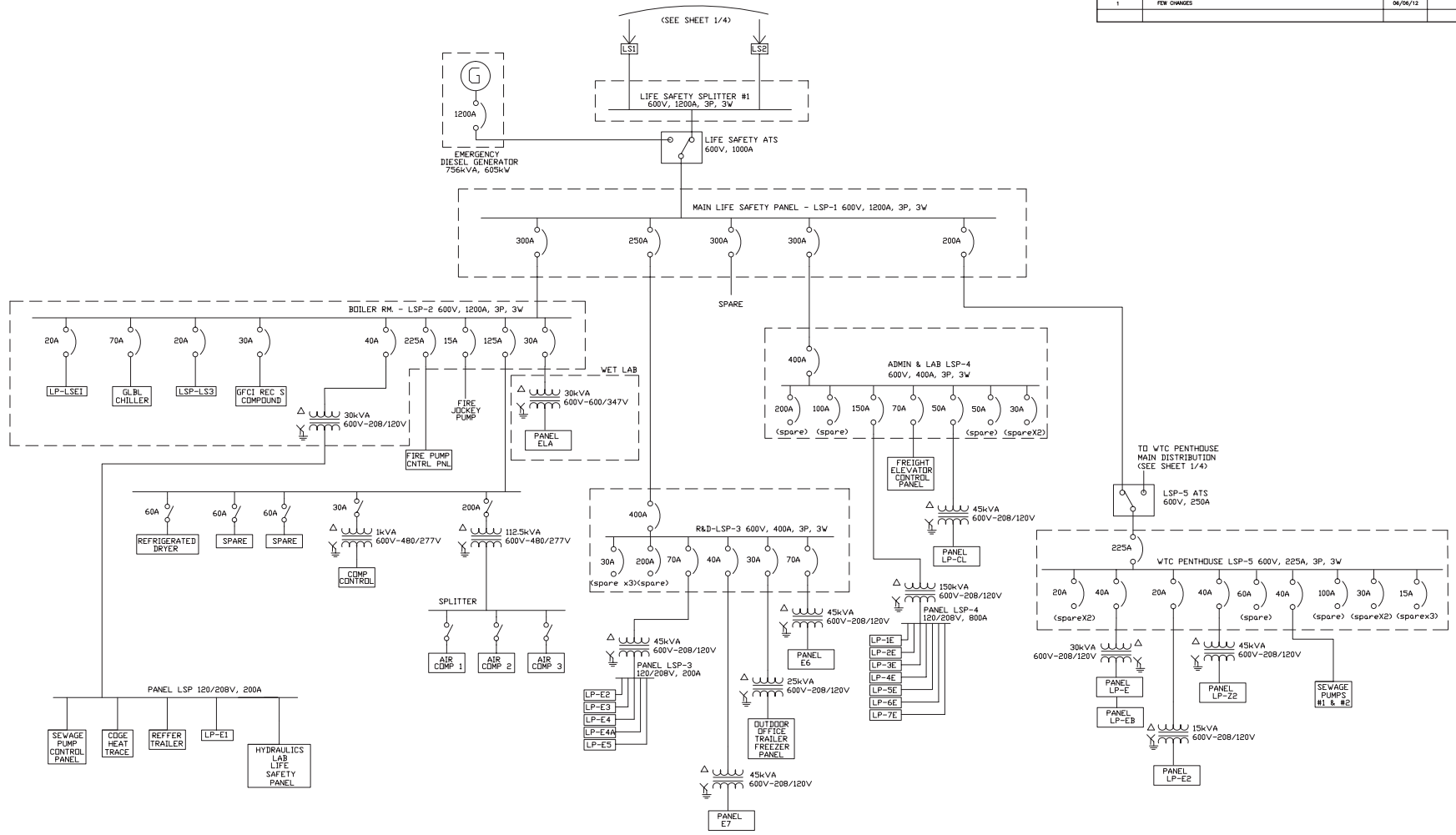

RONDAR INC.
333 Centennial Parkway North
Hamilton ON
L8E 2X6

CUSTOMER: CANADA CENTER FOR INLAND WATERS

TITLE: LIFE SAFETY PANELS SINGLE LINE DIAGRAM

DRAWN BY: R.B.
DATE: 24/01/11
CHECKED BY: W.B.
DATE: 28/02/11

SIZE:
DWG NO.: R26-335
REV 1
SCALE: NOT TO SCALE
SHEET 3 OF 4

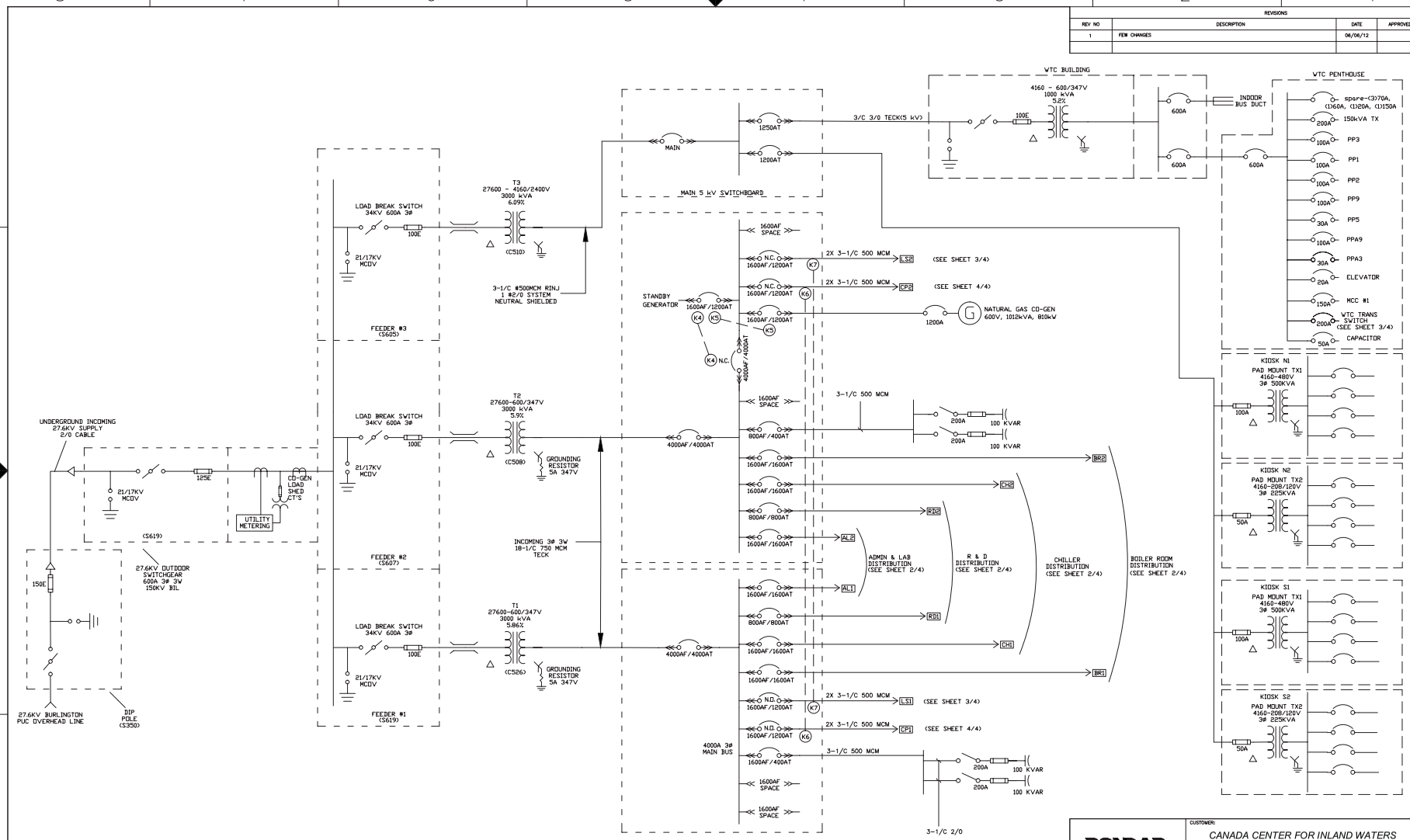

REVISIONS			
REV NO	DESCRIPTION	DATE	APPROVED
1	FEW CHANGES	06/06/12	

RONDAR INC.
333 Centennial Parkway North
Hamilton ON
L8E 2X6

CUSTOMER: CANADA CENTER FOR INLAND WATERS

TITLE: MAIN SINGLE LINE DRAWING

DRAWN BY: R.B.
DATE: 24/01/11
CHECKED BY: W.B.
DATE: 28/02/11

SIZE:
DWG NO.: R26-335
REV 1
SCALE: NOT TO SCALE
SHEET 1 OF 4

REVISIONS			
REV NO	DESCRIPTION	DATE	APPROVED
1	FEW CHANGES	06/06/12	

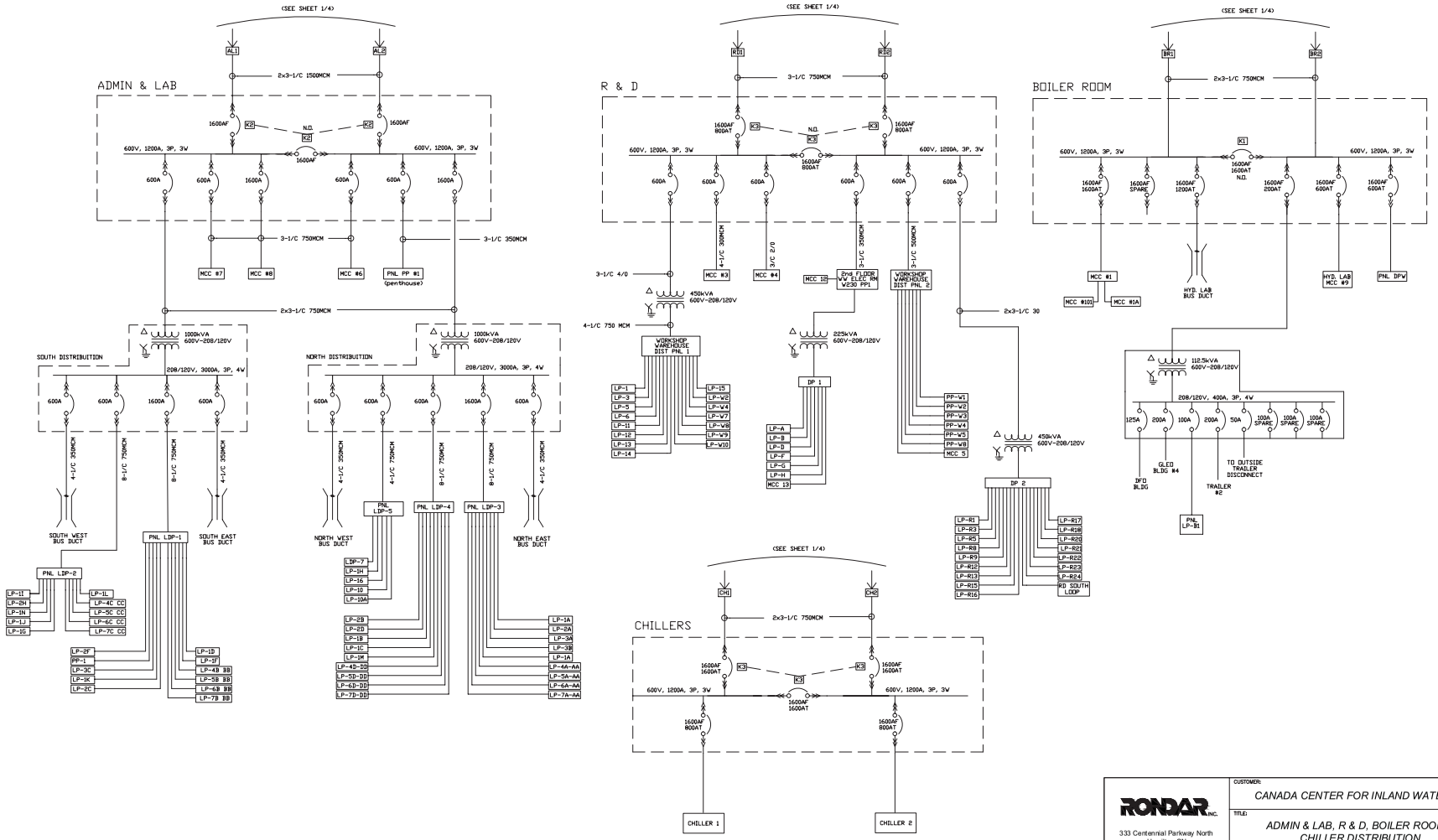

RONDAR INC.
333 Centennial Parkway North
Hamilton ON
L8E 2X6

CUSTOMER: CANADA CENTER FOR INLAND WATERS

TITLE: ADMIN & LAB, R & D, BOILER ROOM & CHILLER DISTRIBUTION SINGLE LINE DIAGRAM

DRAWN BY: R.B.
DATE: 25/01/11
CHECKED BY: W.B.
DATE: 28/02/11

SIZE:
DWG NO.: R26-335
REV 1
SCALE: NOT TO SCALE
SHEET 2 OF 4

MACHINERY RELIABILITY REPORT

Inland Waters Annual Vibration Survey

FOR DATA COLLECTED AT INLAND WATERS ON SEPTEMBER 30, 2011

NIS – (Not in service (previous report (if any) left for trending and your information)

OK – (Unit operating within spec for this run speed and application)

Warning – (1st alarm level – usually tagged for trending and no usually action required)

Alert – (Reached low alarm level – extra data gathered for analysis - may require visual inspection)

Fault – (Exceeded one or more alarms – may require immediate attention and/or replacement)

EQUIPMENT	STATUS	FINDINGS	NOTES - SUGGESTIONS
SYSTEM # 28 FANS & MOTORS			
#28 Supply Fan & Motor	OK	Everything seems to have settled in nicely on this unit since installation and balancing.	Slight axial movement but not of concern at this time and lower than previous readings.
#28 Return Fan & Motor	OK	Fan and Motor operating within spec as related to vibration for this run speed and application.	(Fan bearing access only via grease nipples). Continue to monitor machinery reliability (vibration) on regular basis.
SYSTEM #31 FANS & MOTORS			
#31 Supply Fan & Motor	OK	Fan and Motor operating within spec as related to vibration for this run speed and application.	Continue to monitor machinery reliability (vibration) on regular basis.
#31 Return Fan & Motor	OK	Fan and Motor operating within spec as related to vibration for this run speed and application.	Continue to monitor machinery reliability (vibration) on regular basis. **Note:** *No access to non-drive-end bearing. Permanent mounted accelerometer wired to a termination box for future checks suggested.*
SYSTEM #27 FANS & MOTORS			
#27Supply Fan & Motor	Warning	Same as 2009 findings: Some early bearing activity at fan non-drive-end.	Tagged for trending purposes only and for comparison to next collected data at next survey – no action required.
#27 Return Fan & Motor	OK	Fan and Motor operating within spec as related to vibration for this run speed and application.	Continue to monitor machinery reliability (vibration) on a regular basis.
SYSTEM #1 FANS & MOTORS			
Machine	**Status**	**Findings**	**Notes**
#1 Supply Fan & Motor	OK	Fan and Motor operating within spec as related to vibration for this run speed and application.	Continue to monitor machinery reliability (vibration) on a regular basis.

#1 Return Fan & Motor	OK	Fan and Motor operating within spec as related to vibration for this run speed and application.	Continue to monitor machinery reliability (vibration) on a regular basis.
SYSTEM #5 SUPPLY FAN & MOTOR			
#5 Supply Fan & Motor	Warning	**Fan:** Early bearing activity at fan non-drive-end. **Motor:** Increased vertical vibration at drive end of motor.	**Fan:** Tagged for trending purposes will compare to next survey – no action required. **Motor:** Inspect belt tension and hold down hardware.
SYSTEM #25 ADMIN FAN & MOTOR			
#25 Supply Fan & Motor	OK	Fan and Motor operating within spec as related to vibration for this run speed and application.	Continue to monitor machinery reliability (vibration).
#25 Return Fan & Motor	Not checked for 2011 OK	(2010 report) Fan and Motor operating within spec as related to vibration for this run speed and application.	Continue to monitor machinery reliability (vibration).
SYSTEM #23 AUD SUPPLY FANS & MOTORS			
#23 Supply Fan & Motor	Warning	Motor operating within spec as related to vibration for this run speed and application.	Warning status for early bearing outer race activity at fan non-drive-end.
#23 Return Fan & Motor	OK	Fan and Motor operating within spec as related to vibration for this run speed and application.	Continue to monitor machinery reliability (vibration).
SYSTEM #52 SUPPLY FAN & MOTOR			
#52 Supply Fan & Motor	OK	Fan and Motor operating within spec as related to vibration for this run speed and application.	Continue to monitor machinery reliability (vibration).
SYSTEM #6 SUPPLY MALL FAN & MOTOR			
#6 Supply Fan & Motor	OK	Fan and Motor operating within spec as related to vibration for this run speed and application.	Continue to monitor machinery reliability (vibration).