Public Works and Government Services Canada

Travaux publics et Services gouvernementaux Canada

RETURN BIDS TO:
RETOURNER LES SOUMISSIONS À:

Bid Receiving - PWGSC / Réception des soumissions - TPSGC
11 Laurier St. / 11, rue Laurier
Place du Portage , Phase III
Core 0A1 / Noyau 0A1
Gatineau
Québec
K1A 0S5
Bid Fax: (819) 997-9776

SOLICITATION AMENDMENT
MODIFICATION DE L'INVITATION

The referenced document is hereby revised; unless otherwise indicated, all other terms and conditions of the Solicitation remain the same.

Ce document est par la présente révisé; sauf indication contraire, les modalités de l'invitation demeurent les mêmes.

Comments - Commentaires

Title - Sujet REPAIR AND OVERHAUL SUPPORT SERVICE	
Solicitation No. - N° de l'invitation W8482-116492/A	**Amendment No. - N° modif.** 006
Client Reference No. - N° de référence du client W8482-116492	**Date** 2012-08-09
GETS Reference No. - N° de référence de SEAG PW-$$ML-002-22827	
File No. - N° de dossier 002ml.W8482-116492	**CCC No./N° CCC - FMS No./N° VME**
Solicitation Closes - L'invitation prend fin at - à 02:00 PM on - le 2012-08-31	**Time Zone** **Fuseau horaire** Eastern Daylight Saving Time EDT
F.O.B. - F.A.B. **Plant-Usine:** ☑ **Destination:** ☐ **Other-Autre:** ☐	
Address Enquiries to: - Adresser toutes questions à: Wright, Muriel	**Buyer Id - Id de l'acheteur** 002ml
Telephone No. - N° de téléphone (819) 956-4886 ( )	**FAX No. - N° de FAX** (819) 956-0897
Destination - of Goods, Services, and Construction: **Destination - des biens, services et construction:**	

Vendor/Firm Name and Address
Raison sociale et adresse du fournisseur/de l'entrepreneur

Instructions: See Herein

Instructions: Voir aux présentes

Delivery Required - Livraison exigée	**Delivery Offered - Livraison proposée**
Vendor/Firm Name and Address **Raison sociale et adresse du fournisseur/de l'entrepreneur** **Telephone No. - N° de téléphone** **Facsimile No. - N° de télécopieur**	
Name and title of person authorized to sign on behalf of Vendor/Firm (type or print) **Nom et titre de la personne autorisée à signer au nom du fournisseur/ de l'entrepreneur (taper ou écrire en caractères d'imprimerie)** **Signature**	**Date**

Issuing Office - Bureau de distribution

Marine Machinery and Services / Machineries et services maritimes
11 Laurier St. / 11, rue Laurier
6C2, Place du Portage
Gatineau
Québec
K1A 0S5

Canada

AMENDMENT 005 TO THE SOLICITATION IS ISSUED TO DISTRIBUTE THE **FOURTH (4TH) SET** OF QUESTIONS AND ANSWERS TO ALL BIDDERS.

Question 1:
Must bidders bid on all four (4) groups of pumps?

Answer 1:
Bidders are invited to bid on more than one (1) group of pumps but are not required to bid on all four (4) groups of pumps.

Question 2:
A question has arisen regarding Question 2 of Amendment 4.

It would appear the answer provided to this question directs one to remove the pump, identified by NSN 4320-21-856-0175 and EAC 27348, from the list of Group #4(Ingersoll-Dresser) Pumps.

There is, however, no direction to remove the pump in question from the list Group #4 Pumps identified in ANNEX B – "Groups of Items and Forecasts" of the RFP documents.

Could you please confirm if it is Canada's intention to remove the pump in question from the list of Group #4 Pumps and that ref to the pump in question should be deleted from ANNEX B?

Answer 2:
Yes.

At **ANNEX "B",** page 4 of 4
DELETE: PUMP UNIT, CENTRIFUGAL, NSN 4320-21-856-0175

Question 3:
Pricing:

To date, the following directions has been received:

1) A major overhaul shall include replacement of the nine parts referenced in Annex A, 3.3.8.1 through 3.3.8.9.

2) A major overhaul of a pump shall not normally be undertaken. Amendment 2, Reply 1 instead provides instruction that only items 5, 6, and 8 of Annex A, Section 3.3.8 shall be replaced. All remaining parts shall be assessed and replaced as required.

3) Annex E requires pricing for the Major Overhaul of each pump be provided, with major overhaul defined as per point 1 above.

4) Amendment 3 adds an additional Annex E-1 which requires pricing for repair of re-usable components, items 1, 2, 3, 4, 7 and 9 of Annex A, Section 3.3.8.

With only major overhaul pricing and repair pricing being requested to date, it will be difficult to determine the final price of a routine overhaul (items 5, 6 and 8).

Should Canada not request additional pricing under Annex E which defines the price of the "basic" overhaul as defined in item 2, above (replacement of items 5, 6 and 8)?

Answer 3:
Items 5, 6, 8, and 9 are to be replaced during major overhaul under normal conditions. Item 9 may be re-used only if in exceptional condition and even then the wear rings must be replaced.

Yes, Canada should request pricing for "basic" overhaul. See revised Annex E, attached.

Question 4:
Amendment 4, Question 3: The answer to question 3 is acknowledged and it is understood a Chesterton Type 180 mechanical seal is used on all main fire pumps. However, more detail is required as to the specifics of the mechanical seal.

Is Canada able to provide specifications related to the Chesterton Type 180 mechanical seal?

Answer 4:
See two (2) drawings attached.

Question 5.
The data in appendix 3 table 2 provided in amendment 004 does not agree with the data in appendix 7.

Please clarify the required test data. See attachment.

Answer 5:
Appendix 3, table 2 is the correct data. Appendices 5 and 7 have been revised to match it.

Question 6:
Amendment 004 answer to question 3 states Chesterton type 180 mechanical seal is now used on all main fire pumps.

Please specify the drawing number for the Chesterton type 180 seal to be used in order to clarify the seal material construction.

Answer 6:
See two (2) drawings attached.

Question 7:
Amendment 004 answer to question 4 provided revised table 1 and 2 of appendix 3 to annex A, but does not confirm that the requirements have been met previously without requiring waivers.

Please confirm that the noise and vibration test specs have been met previously as a post Repair / Overhaul test requirement without a waiver.

Answer 7:
The HAL class ships have for the majority of cases met the airborne noise and vibration levels required in Table 1 and Table 2 of Appendix 3 to Annex A for the last 5 or so years.

Question 8:
Annex A, Appendix 3's Table 2 vs Performance Sheets (Appendices 4, 5, 6, & 7 to Annex A):

Amendment 4 issued on 16-July-2012 contains a Table 2 entitled "Halifax Class Machinery R&O Power Average Vibration Requirements".

Amendment 4 modifies Table 2 as originally issued on page 15 of Appendix 3 to Annex A.

The details provided in Appendix 3's Table 2 conflict with the details provided in the respective pump's Performance Sheets.

Where conflicts exist, which document will take precedence?

Answer 8:
Appendix 3, table 2 takes precedence. Respective pump performance sheets have been revised to match it.

Question 9:
The list of pumps provided in Appendix 3's Table 2 is not exhaustive of the Halifax-class pumps covered by the RFP.

Please confirm that in instances where Appendix 3's Table 2 is silent on a particular Halifax-class pump, the performance criteria for that pump, as specified in Annex A, Appendices 4, 5, 6, or 7, shall be applicable?

Answer 9:
Confirmed.

Question 10:
Greater clarity is hereby requested regarding Amendment 4, Question 4.

Please confirm the vibration levels listed in Annex A, Appendix 7 have been met in previous R&O tests without the need for concessions from the Department of National Defence/ Royal Canadian Navy.

Answer 10:
The vibration levels DND is requesting be met are firm. Previous R&O test data is irrelevant.

Question 11:
Annex A, Appendix 1, Section 4.1 versus Annex A, Appendix 3, Figure 3:

Section 4.1 of Appendix 1 specifies: "Two measurements are required at each point, one in a direction radial to the centre of rotation, the other in an axial direction parallel to the centre of rotation. If other directions are required, they will be specified."

Figure 3 of Appendix 3 references more than two measurements.

Please confirm all measurements identified in Figure 3 of Appendix 3 to Annex A are required only for Halifax-class pumps and the two measurements referenced in section 4.1 of Appendix 1 to Annex A are applicable to all Iroquois-class pumps.

Answer 11:
Confirmed.

Question 12:
Please confirm that the following are to be included in the bid price.

These items are listed in specification sheets but not listed in the lead sheets to App 5 & 7, nor in Annex B.

Group #2:	Pump, Rotary	4320 12 314 5773	SNH210R40D12.1W3

Answer 12:
It is to be included in the bid price. The pump has been added to group #2.

At Annex B, add: Pump, Rotary	4320 12 314 5773	SNH210R40D12.1W3

Question 13:
Amendment #4 provided a replacement to Appendix 3 to Annex A, and provides revised airborne noise and "average " vibration requirements for the Halifax Class machinery. The vibration levels for the Jockey Pump (EAC 27-931) was changed from 84 to 86 in this revised Appendix 3. However, if one reviews the data in Appendix 7 to Annex A for EAC 27931 (HFX Class-Jockey Pump) the vibration levels are totally different and there is no 8K Octave Band requirement. Similarly, EAC 25548 (IMO Fuel Oil Boost Pump) has conflicting values between Appendix 3 and Appendix 5. These performance requirements are critical as they will be used by the NDQAR to release or reject the R&O of each pump and/or motor and thus any over specification may make it impossible for the contractor to meet the vibration levels and will require the contractor to incur unreasonable costs.

Please clarify which vibration levels are to be used: those in Appendix 3, or the readings provided in Appendices 4, 5, 6 and 7.

Answer 13:
Appendix 3 takes precedence where applicable. However, where there was conflicting information, Appendices 4, 5, 6, and 7 have been updated to match what is stated in Appendix 3.

Question 14:
Further, it is understood that the original Halifax Class pump vibration requirements were granted waivers and that revised vibration specifications were issued and have been in use for a considerable period.

Please confirm that the listed specifications (Appendix 3, 4, 5, 6, 7) are the amended (by waiver or specification change) version.

Answer 14:
Confirmed.

Question 15:
Quality Assurance (Mandatory): Please confirm that if the bidder is registered as ISO 9001: 2008 and submits its registration, that the requirements of RFP Part 3, Section I, paragraph 1.9 and Annex F, page 4/6 - Quality Assurance have been met.

Answer 15:
Confirmed.

Question 16:
Appendix 3, Para 5.1.3 states "Accelerometers shall be attached to metal blocks that shall be permanently welded or brazed to the machine's structure at the specified locations." It is assumed that the required "permanently welded in place" test blocks already exist and will be installed on the machine as received.

If the machine is received with missing, damaged or incorrectly located accelerometer test blocks, will installation of new ferrous cylindrical flat surfaced disks 1" in diameter, 5/16" thick, ground flat and installed using a two part epoxy vice the "Drill and Tap Method" or "Stud Welding Procedure" identified in Appendix 2 be acceptable?

Answer 16:
The pumps should arrive with all blocks in place, however from time to time some will show up missing blocks.

The procedures shall be followed as written in the RFP without exception.

Question 17:
Please confirm that the following components shall not be replaced as part of the major overhaul. As instructed in Amendment No. 2, "1. Reply"

3.3.8.7 Shaft sleeve (where fitted);

3.3.8.9 Impeller(s) and impeller wear ring(s) (where fitted);

Answer 17:
Refer to question 3.

Question 18:
I believe Annex 3, table 1 is still not attainable based on the FAT for the production units.

Will PWGS provide the actual levels obtained without waiver ?

Since the contractor is required to invest in the overhaul until these levels are met, this becomes very important to the bid.

Answer 18:
No, PWGSC will not provide the actual levels obtained without waiver.

Question 19:
Please confirm that Canada will accept functionally equivalent parts, as long as it can be demonstrated that these parts meet or exceed all contractual and technical requirements of the solicitation.

Answer 19:
Canada will only accept OEM parts.

Question 20:
We would like to propose a Limitation of Liability to a maximum definitive amount that is acceptable to both Canada and ... (the bidder) ... and we would request that the agreed figure is incorporated in the full text of the Articles of Agreement.

Answer 20:
Under PART 7 - RESULTING CONTRACT CLAUSES, page 36 of 36
ADD the following clause:

N0001C Limitation of Contractor's Liability for Damages to Canada 2008-05-12

1. This section applies despite any other provision of the Contract and replaces the section of the general conditions entitled "Liability". Any reference in this section to damages caused by the Contractor also includes damages caused by its employees, as well as its subcontractors, agents, and representatives, and any of their employees.

2. Whether the claim is based in contract, tort, or another cause of action, the Contractor's liability for all damages suffered by Canada caused by the Contractor's performance of or failure to perform the Contract is limited to $ CONTRACT VALUE. This limitation of the Contractor's liability does not apply to:

a.any infringement of intellectual property rights; or

b.any breach of warranty obligations.

3. Each Party agrees that it is fully liable for any damages that it causes to any third party in connection with the Contract, regardless of whether the third party makes its claim against Canada or the Contractor. If Canada is required, as a result of joint and several liability, to pay a third party in respect of damages caused by the Contractor, the Contractor must reimburse Canada for that amount.

RESULTING FROM POLICY CHANGE INTRODUCED 11 JULY 2012:

Under PART 2 - BIDDER INSTRUCTIONS, article **1. Standard Instructions and Conditions**, p. 5/36
DELETE: 2003 2012-03-02
INSERT: 2003 2012-07-11 *(see Article 01)*

Under PART 5 - CERTIFICATIONS, p. 16/36
INSERT the following clause:

2. Code of Conduct Certifications - Consent to a Criminal Record Verification

2.1 Bidders must submit with their bid, by the bid solicitation closing date:

(a) a complete list of names of all individuals who are currently directors of the Bidder;

(b) a properly completed and signed form Consent to a Criminal Record Verification (PWGSC-TPSGC 229), for each individual named in the list.

Under PART 7 - RESULTING CONTRACT CLAUSES, article 2.1 **General Conditions**, p.22/36
DELETE: 2035 2012-03-02
INSERT: 2035 2012-07-11 *(see Article 41)*

ALL OTHER TERMS AND CONDITIONS OF THE SOLICITATION REMAIN UNCHANGED.

ANNEX E
To W8482-11-6492
BASIS OF PAYMENT / PRINCIPES DE PAIEMENT
FISCAL YEAR - ANNÉE FINANCIÈRE 2012-2013

Price Grid Sheet - Feuille de cotation

(Firm Hourly Rates & Firm Prices, as applicable – Prix ferme et taux horaire pour tous les NNO, si applicable)

GROUP - GROUPE # 1, 2, 3 & 4

DESCRIPTION	
Firm price for application of ceramic coating (if applicable) – Prix ferme pour l'application d'une couche de céramique (si applicable)	

DESCRIPTION	
Firm Houly Labour Rate for Modifications, MRPs & In plant reduction to spares - (B.1.1.b) - Taux horaire ferme pour les réparations hors norme, modifications, équipes mobiles de réparation & réduire en pièces détachées.	

DESCRIPTION	
Firm Markup for Parts & Materiel to carry out modifications and MRPs - (B.1.1b) - Majoration ferme pour les pièces et le matériel pour les modifications et les équipes mobiles de réparation.	Fixed at 15%

DESCRIPTION	
Firm Composite Hourly Labour rate for TSOW 3.35, 3.2.6, 3.2.7 & 3.2.8 activities for all groups of pumps - (B.1.1.c) - Taux horaire composé pour les tâches ÉTE 3.2.5, 3.2.6, 3.2.7 & 3.2.8 pour tous les groupes de pompes	

DESCRIPTION	
Firm Fixed Price to conduct additonal noise and vibration readings for HALIFAX Class equipment - (B.1.1.d) - Prix ferme pour effectuer les mesures additionnelles du bruit et de la vibration pour les équipements de la Classe HALIFAX.	Include in Firm Fixed Price as applicable

ANNEX E
To W8482-11-6492
BASIS OF PAYMENT / PRINCIPES DE PAIEMENT
FISCAL YEAR - ANNÉE FINANCIÈRE 2012-2013

Price Grid Sheet - Feuille de cotation

(Indicate Group # and complete for each NSN per group – Indiquer le Groupe et completer pour chaque NNO)

GROUP - GROUPE #

DESCRIPTION	**NSN**	PIÈCE-PART #
Firm Price for Basic Overhaul Prix ferme pour réparation & révision de base Firm Price for Major Overhaul - (B.1.1a) - Prix ferme pour réparation & révision complète		

DESCRIPTION	**NSN**	PIÈCE-PART #
Firm Price for Basic Overhaul Prix ferme pour réparation & révision de base Firm Price for Major Overhaul - (B.1.1a) - Prix ferme pour réparation & révision complète		

DESCRIPTION	**NSN**	PIÈCE-PART #
Firm Price for Basic Overhaul Prix ferme pour réparation & révision de base Firm Price for Major Overhaul - (B.1.1a) - Prix ferme pour réparation & révision complète		

DESCRIPTION	**NSN**	PIÈCE-PART #
Firm Price for Basic Overhaul Prix ferme pour réparation & révision de base Firm Price for Major Overhaul - (B.1.1a) - Prix ferme pour réparation & révision complète		

DESCRIPTION	**NSN**	PIÈCE-PART #
Firm Price for Basic Overhaul Prix ferme pour réparation & révision de base Firm Price for Major Overhaul - (B.1.1a) - Prix ferme pour réparation & révision complète		

DESCRIPTION	**NSN**	PIÈCE-PART #
Firm Price for Basic Overhaul Prix ferme pour réparation & révision de base Firm Price for Major Overhaul - (B.1.1a) - Prix ferme pour réparation & révision complète		

APPENDIX 5
To: ANNEX A To W8482-116492
Dated: 5 Nov 2010

PERFORMANCE SHEETS – GROUP #2 (IMO & WARREN)

~~DESCRIPTION~~	~~NSN~~	~~PART NO.~~	~~MANUFACTURER~~	~~EAC~~
~~PUMP, ROTARY~~	~~4320 01 291 3867~~	~~3DAX-218~~	~~Imo Industries~~	~~25314~~
~~PUMP UNIT, ROTARY~~	~~4320 21 850 0190~~	~~SG4677~~	~~Imo Industries~~	~~25314~~
~~MOTOR, AC~~	~~6105 21 859 7991~~	~~1225-3~~	~~General Dynamics~~	~~25314~~
~~PUMP UNIT, ROTARY~~	~~4320 21 850 0072~~	~~SG-4661~~	~~Imo Industries~~	~~25316~~
~~PUMP, ROTARY~~	~~4320 21 871 8737~~	~~SF10521~~	~~Imo Industries~~	~~25316~~
~~MOTOR, AC~~	~~6105 21 842 2827~~	~~3286-3~~	~~General Dynamics~~	~~25316~~
~~PUMP UNIT, ROTARY~~	~~4320 21 850 0019~~	~~SG-4667~~	~~Imo Industries~~	~~25322~~
~~PUMP UNIT,CENTRIFUGAL~~	~~4320 21 858 3305~~	~~6-DMVS-14~~	~~Warren Pump Inc~~	~~25325~~
~~PUMP UNIT, ROTARY~~	~~4320 21 904 1357~~	~~SN210-40~~	~~Allweiler AG~~	~~25545~~
~~MOTOR, AC~~	~~6105 21 903 5890~~	~~X6099D~~	~~Etatech Ind.~~	~~25545~~
~~PUMP UNIT, ROTARY~~	~~4320 01 289 6347~~	~~SF10909~~	~~Imo Industries~~	~~25548~~
~~PUMP, ROTARY~~	~~4320 01 289 6835~~	~~SF10910~~	~~Imo Industries~~	~~25548~~
~~MOTOR, AC~~	~~6105 01 289 5905~~	~~SC0228-3~~	~~Reliance Electric~~	~~25548~~
~~MOTOR, AIR~~	~~2895 01 147 1097~~	~~4401RM/VRM224~~	~~Ingersoll-Rand~~	~~25549~~
~~PUMP UNIT, ROTARY~~	~~4320 01 289 6736~~	~~SF10896~~	~~Imo Industries~~	~~25549~~
~~PUMP, ROTARY~~	~~4320 01 289 6834~~	~~SF10897~~	~~Imo Industries~~	~~25549~~
~~MOTOR, AC~~	~~6105 01 292 0074~~	~~SC0223-5~~	~~Reliance Electric~~	~~25549~~
~~PUMP,ROTARY~~	~~4320 01 296 4239~~	~~E-854~~	~~Warren Pump Inc~~	~~27900~~
~~PUMP UNIT, ROTARY~~	~~4320 21 856 0322~~	~~FX4LE312~~	~~Imo Industries~~	~~39107~~
~~PUMP UNIT, ROTARY~~	~~4320 01 296 4189~~	~~E-860~~	~~Warren Pump Inc~~	~~39168~~
~~PUMP, ROTARY~~	~~4320 01 298 2426~~	~~E-853~~	~~Warren Pump Inc~~	~~39168~~
~~MOTOR, AC~~	~~6105 01 300 2443~~	~~801633-038~~	~~Reliance Electric~~	~~39168~~

DESCRIPTION	NSN	PART NO.	MANUFACTURER	EAC
PUMP, ROTARY	4320 01 291 3867	3DAX-218	Imo Industries	25314
PUMP UNIT, ROTARY	4320 21 850 0190	SG4677	Imo Industries	25314
MOTOR, AC	6105 21 859 7991	1225-3	General Dynamics	25314
PUMP UNIT, ROTARY	4320 21 850 0072	SG-4661	Imo Industries	25316
PUMP, ROTARY	4320 21 871 8737	SF10521	Imo Industries	25316
MOTOR, AC	6105 21 842 2827	3286-3	General Dynamics	25316
PUMP UNIT, ROTARY	4320 21 850 0019	SG-4667	Imo Industries	25322
PUMP UNIT,CENTRIFUGAL	4320 21 858 3305	6-DMVS-14	Warren Pump Inc	25325

PERFORMANCE SHEETS – GROUP #2 (IMO & WARREN)

PUMP UNIT, ROTARY	4320 21 904 1357	SN210-40	Allweiler AG	25545
PUMP UNIT, ROTARY	4320-12-314-5773	**SNH210R40D12.1W3**	Allweiler AG	25545
MOTOR, AC	6105 21 903 5890	X6099D	Etatech Ind.	25545
PUMP UNIT, ROTARY	4320 01 289 6347	SF10909	Imo Industries	25548
PUMP, ROTARY	4320 01 289 6835	SF10910	Imo Industries	25548
MOTOR, AC	6105 01 289 5905	SC0228-3	Reliance Electric	25548
MOTOR, AIR	2895 01 147 1097	4401RM/VRM224	Ingersoll-Rand	25549
PUMP UNIT, ROTARY	4320 01 289 6736	SF10896	Imo Industries	25549
PUMP, ROTARY	4320 01 289 6834	SF10897	Imo Industries	25549
MOTOR, AC	6105 01 292 0074	SC0223-5	Reliance Electric	25549
PUMP,ROTARY	4320 01 296 4239	E-854	Warren Pump Inc	27900
PUMP UNIT, ROTARY	4320 21 856 0322	FX4LE312	Imo Industries	39107
PUMP UNIT, ROTARY	4320 01 296 4189	E-860	Warren Pump Inc	39168
PUMP, ROTARY	4320 01 298 2426	E-853	Warren Pump Inc	39168
MOTOR, AC	6105 01 300 2443	801633-038	Reliance Electric	39168

PERFORMANCE SHEETS – GROUP #2 (IMO & WARREN)

EAC 25314

IRO CLASS FUEL OIL BOOST PUMP

NSN	P/N	DESCRIPTION	NSCM
4320-21-850-0190	SG4677	Pump Unit, Rotary	16712
4320-01-291-3867	3DAX-218	Pump, Rotary	59180
6105-21-859-7991	1225-3	Motor, AC	95402

EQUIPMENT CONFIGURATION CHECKLIST

Pump Unit Rotary, consists pump, motor, bracket, and coupling.

Pump Rotary consists of pump only.

Motor, AC consists of the electric motor only.

PERFORMANCE TEST CRITERIA

PUMP

Discharge Pressure	35 PSIG
Suction Lift	15 in. Hg
Flow	50 IGPM

MOTOR

Voltage	440 Volts
Current	3 Amps
Power	2.3 Kilowatts (Max.)
Speed	1750 RPM

PERFORMANCE TEST NOTES

Operate unit for eight hours after readings have stabilised at rated conditions.

PERFORMANCE SHEETS – GROUP #2 (IMO & WARREN)

EAC 25314

VIBRATION LEVELS

Octave Band Frequency (Hz)	Maximum Level (VdB)	Previous Test Levels (reference only)
16	95	80
31.5	98	82
63	99	78
125	96	73
250	93	80
500	90	83
1K	87	84
2K	84	90
4K	81	77

VIBRATION TEST NOTES

Motor Vibration Category: B

Vibration Block Locations for Fuel Oil Boost Pump

Vibration block locations are as indicated on the attached drawing.

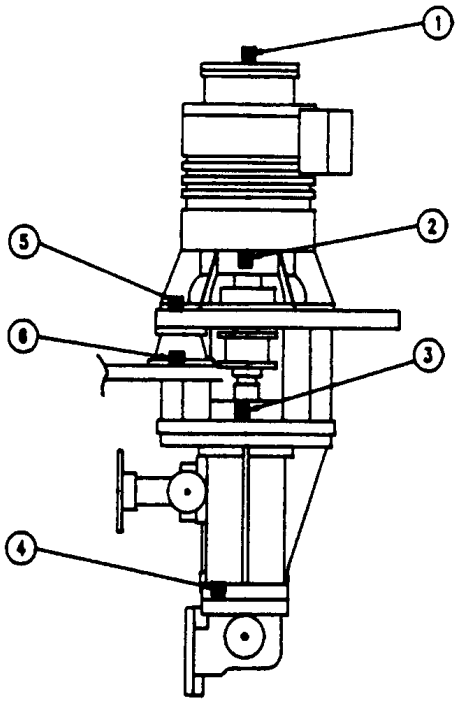

PERFORMANCE SHEETS – GROUP #2 (IMO & WARREN)

EAC 25316

IRO CLASS FUEL OIL TRANSFER PUMP

NSN	P/N	DESCRIPTION	NSCM
4320-21-850-0072	SG-4661	Pump Unit, Rotary	16712
4320-21-871-8737	SF10521	Pump, Rotary	16712
6105-21-842-2827	3286-3	Motor, AC	95402

EQUIPMENT CONFIGURATION CHECKLIST

Pump Unit Rotary, consists of pump, motor, bracket, and coupling.

Pump Rotary, consist of the pump only.

Motor, AC, consists of the electric motor only.

PERFORMANCE TEST CRITERIA

PUMP

Discharge Pressure	80 PSIG
Suction Lift	18 Inch Hg
Flow	191 IGPM

MOTOR

Voltage	440 Volts
Current	26 Amps
Power	15 kW (MAX)
Speed	1750 RPM

PERFORMANCE TEST NOTES

Operate unit for eight hours after readings have stabilised at rated conditions.

PERFORMANCE SHEETS – GROUP #2 (IMO & WARREN)

EAC 25316

VIBRATION LEVELS

Octave Band Frequency (Hz)	Maximum Level (VdB)	Previous Test Levels (reference only)
16	95	102
31.5	98	93
63	99	105
125	96	95
250	93	94
500	90	97
1K	87	97
2K	84	100
4K	81	94

VIBRATION TEST NOTES

VA readings to be taken at end of eight hour run.

Motor vibration category: A

Vibration Block Locations for Fuel Transfer Pump

Vibration block locations are as indicated on the attached drawing.

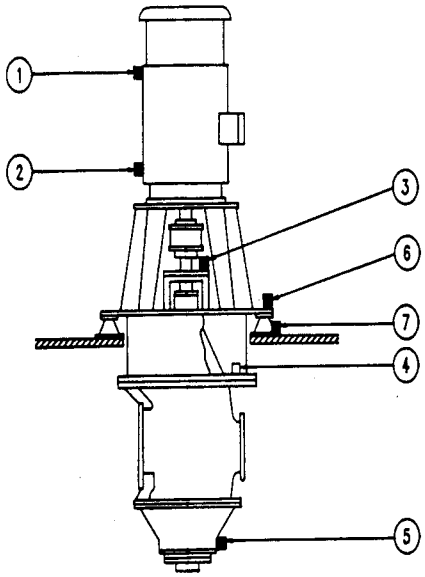

PERFORMANCE SHEETS – GROUP #2 (IMO & WARREN)

EAC 25322

IRO CLASS STANDBY LUBE OIL PUMP

NSN	P/N	DESCRIPTION	NSCM
4320-21-850-0019	SG-4667	Pump Unit, Rotary	16712

EQUIPMENT CONFIGURATION CHECKLIST

Pump Unit Rotary, consists pump, motor, bracket, and coupling.

PERFORMANCE TEST CRITERIA

PUMP

Discharge Pressure	70 PSIG
Suction Lift	10 in. Hg
Capacity @ 1750 RPM	453 IGPM
Capacity @ 870 RPM	175 IGPM
Suction Temperature	140^0 F
Liquid Pumped	Lube Oil
Viscosity	135 - 5000 SSU

MOTOR

Rating	50/25 H.P.
Speed (Sync)	1800/900
Voltage	440 Volts
Current	60 Amps
Power	39.2 kW (Max.)

PERFORMANCE TEST NOTES

The unit is to be operated at both high and low speed at the rated discharge pressure to prove the required flow rates.

PERFORMANCE SHEETS – GROUP #2 (IMO & WARREN)

EAC 25322

VIBRATION LEVELS

Octave Band Frequency (Hz)	Maximum Level (VdB)	Previous Test Levels (reference only)
16	95	94
31.5	98	96
63	99	97
125	96	110
250	93	107
500	90	102
1K	87	95
2K	84	93
4K	81	92

VIBRATION TEST NOTES

Vibration readings are to be taken with unit operating at high speed.

Motor Vibration Category: A

Vibration Block Locations for Standby Lube Oil Pump

Vibration block locations are as indicated on the attached drawing.

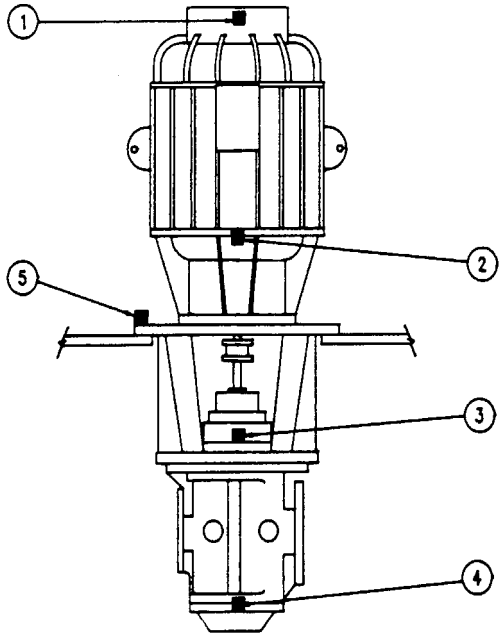

PERFORMANCE SHEETS – GROUP #2 (IMO & WARREN)

EAC 25325

PUMP UNIT CENTRIFUGAL

NSN	P/N	DESCRIPTION	NSCM
4320-21-858-3305	6DMVS14	Pump Unit, Centrifugal	63857

EQUIPMENT CONFIGURATION CHECKLIST

Pump Unit Rotary, consists of the pump, electric motor, and coupling.

PERFORMANCE TEST CRITERIA

PUMP

Flow	850 IGPM
Discharge Pressures	34 PSIG
Suction Lift	Flooded

MOTOR

Rating	30 BHP
Speed (Synchronous)	1195 RPM
Frame Size	507VY
Volts	440
Hertz	60
Phase	3

PERFORMANCE TEST NOTES

Record following data hourly for 4 hours: flow rate; discharge pressure; inlet pressure, inlet temperature, speed; volts; amps; K watts; power factor; and time.

PERFORMANCE SHEETS – GROUP #2 (IMO & WARREN)

EAC 25325

VIBRATION LEVELS

Octave Band Frequency (Hz)	Maximum Level (VdB)	Previous Test Levels (reference only)
16	95	100
31.5	98	90
63	99	78
125	96	84
250	93	85
500	90	87
1K	87	82
2K	84	82
4K	81	75

VIBRATION TESTING NOTES

Vibration readings are to be taken while operating unit at design flow only on blocks 1, 2, 3 and 4 as shown below.

Motor Vibration Category: A

Vibration Block Locations for Auxiliary Circ Pump

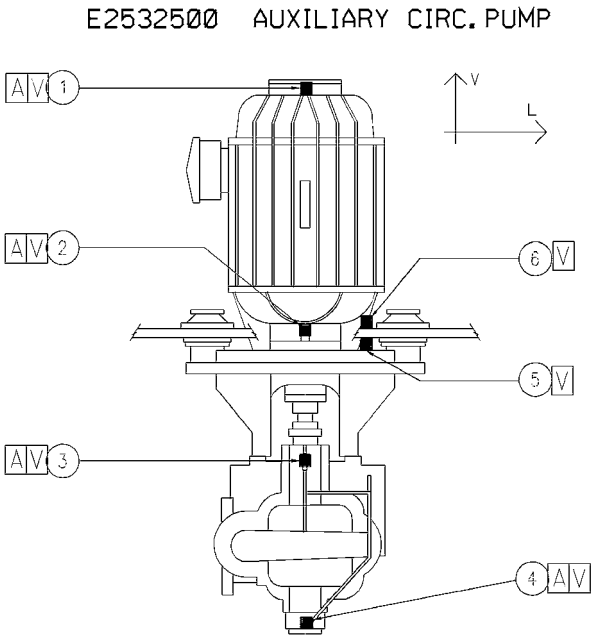

PERFORMANCE SHEETS – GROUP #2 (IMO & WARREN)

EAC 25545

PTR CLASS - FUEL SERVICE PUMP

NSN	P/N	DESCRIPTION	NSCM
4320-21-904-1357	SN210-40	Pump Unit, Rotary	D8860
4320-12-314-5773	SNH210R40D12.1W3	Pump, Rotary	D8860
6105-21-903-5890	X6099D	Motor, AC	36539

EQUIPMENT CONFIGURATION CHECKLIST

Pump Unit Rotary, consist of the pump, motor, coupling, base plate, and pump relief valve.

Pump Rotary, consists of pump and pump relief valve.

Motor, AC, consists of the electric motor.

PERFORMANCE TEST CRITERIA

PUMP

Discharge Pressure	360 PSIG
Suction Lift	0 FT
Flow	30 IGPM

MOTOR

Voltage	440 Volts
Current	22 Amps
Speed	1750 RPM

PERFORMANCE TEST NOTES

Pump is to be operated for eight hours after readings have stabilised.

APPENDIX 5
To: ANNEX A To W8482-116492
Dated: 5 Nov 2010

PERFORMANCE SHEETS – GROUP #2 (IMO & WARREN)

EAC 25545

VIBRATION LEVELS

Octave Band Frequency (Hz)	Maximum Level (VdB)	Previous Test Levels (reference only)
16	95	89
31.5	98	103
63	99	96
125	96	86
250	93	84
500	90	89
1K	87	88
2K	84	79
4K	81	87

VIBRATION TEST NOTES

Vibration readings to be taken while unit operating at rated conditions.

Motor Vibration Category: A

Vibration block locations for the Fuel Service Pump are as indicated on the attached drawing.

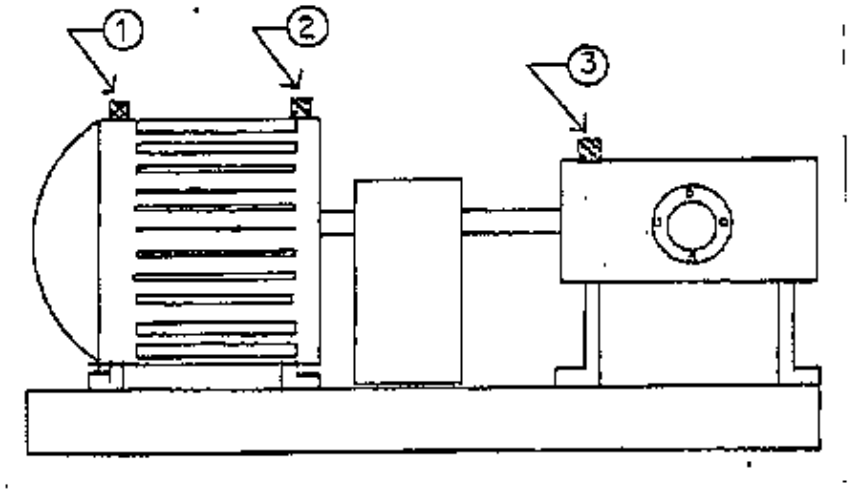

PERFORMANCE SHEETS – GROUP #2 (IMO & WARREN)

EAC 25548

HFX CLASS FUEL OIL BOOST & TRANSFER PUMPS

NSN	P/N	DESCRIPTION	NSCM
4320-01-289-6347	SF10909	Pump Unit, Rotary	59180
4320-01-289-6835	SF10910	Pump, Rotary	59180
6105-01-289-5905	SC0228-3	Motor, AC	50380

EQUIPMENT CONFIGURATION CHECKLIST

Pump Unit, Rotary consists of the pump end, motor, bracket and coupling

Pump, Rotary consists of the pump end only.

Motor, AC consists of the electric motor only.

PERFORMANCE TEST CRITERIA

PUMP

At 1150 RPM	17^{M3}/Hr @ 3.3 Bar
At 575 RPM	$5.5^{M3/}$Hr @ 3.6 Bar
Discharge (Total Head)	3.9 Bar
Suction Lift	0.6 Bar

MOTOR

Rating	5.6 and 2.8 kW, 440V, 3 Phase, 60 Hz
Shaft Speed	1150 and 575 RPM

PERFORMANCE TEST NOTES

1. When the test oil has stabilised for 32 SSU, operate the unit four hours at low speed and four hours at high speed at the rated discharge pressures to prove the required flow rates.

2. In addition to the maximum vibration levels required below, noise and vibration readings shall be taken in accordance to the test procedures and specifications provided in Appendix A3 of Annex A. The maximum acceptable noise and vibration limits that must be achieved on the complete pump unit are provided in Tables 1 and 2 of the fore mentioned Appendix.

PERFORMANCE SHEETS – GROUP #2 (IMO & WARREN)

EAC 25548

~~**VIBRATION LEVELS**~~

~~Octave Band Frequency (Hz)~~	~~Maximum Level (VdB)~~	~~Previous Test Levels (reference only)~~
~~31.5~~	~~98~~	~~73~~
~~63~~	~~99~~	~~87~~
~~125~~	~~96~~	~~85~~
~~250~~	~~93~~	~~88~~
~~500~~	~~90~~	~~90~~
~~1K~~	~~87~~	~~93~~
~~2K~~	~~84~~	~~96~~
~~4K~~	~~81~~	~~98~~

VIBRATION TEST NOTES

Vibration readings are to be taken with unit operating at high speed, design flow only on blocks 1, 2, 3 and 4 as shown below.

Motor vibration category: B

Vibration Block Locations for Fuel Oil Boost and Transfer Pump

Vibration block locations are as indicated on the attached drawing.

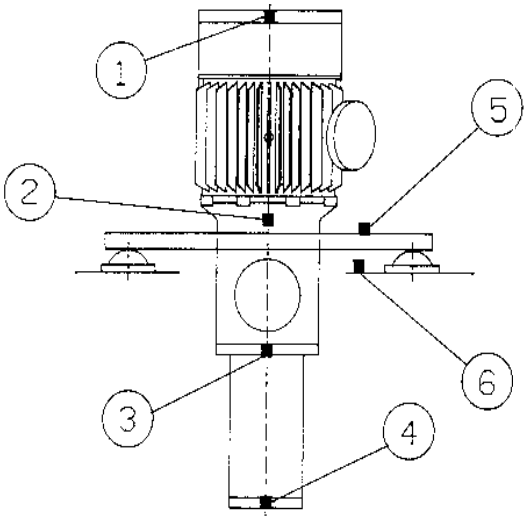

PERFORMANCE SHEETS – GROUP #2 (IMO & WARREN)

EAC 25549

HFX CLASS MAIN LUBE OIL PUMP

NSN	P/N	DESCRIPTION	NSCM
4320-01-289-6736	SF10896	Pump Unit, Rotary	59180
4320-01-289-6834	SF10897	Pump, Rotary	59180
6105-01-292-0074	SC0223-5	Motor, AC	50380
2895-01-147-1097	4401RM/VRM244	Motor, Air	30760

EQUIPMENT CONFIGURATION CHECKLIST

Pump Unit Rotary, consists of the pump, electric motor, air motor, brackets and couplings.

Pump Rotary, consists of the pump end only.

Motor, AC, consists of the electric motor only.

Motor Air, consist of the air motor only.

PERFORMANCE TEST CRITERIA

PUMP

Electric Motor at 1770 RPM	125M^3/Hr (550 USGPM)
Electric Motor at 880 RPM	47M^3/Hr (207 USGPM)
Air Motor at 1550 RPM	110M^3/Hr (480 USGPM)

Discharge Pressures (Total Head)

Electric Motor at 1770 RPM	4.4 BARS (64 PSIG)
Electric Motor at 880 RPM	4.4 BARS (64 PSIG)
Air Motor at 1550 RPM	3.5 BARS (51 PSIG)
Suction Lift	0.3 BARS (9" HG)

Brake Horsepower

Electric Motor at 1770 RPM	32 BHP
Electric Motor at 880 RPM	14.5 BHP
Air Motor at 1550 RPM	24.7 BHP

PERFORMANCE SHEETS – GROUP #2 (IMO & WARREN)

EAC 25549

ELECTRIC MOTOR

Rating	50/25 HP
Speed (Synchronous)	1800/900 RPM
Volts	440
Hertz	60
Phase	3

AIR MOTOR

Speed	1550 RPM
Air Consumption	480 SCFM
Air Supply	70 PSI

PERFORMANCE TEST NOTES

1. When the test oil has stabilised for 100 SSU, operate the unit four hours at low speed & four hours at high speed at the rated discharge pressures to prove required flow rates.

2. Record following data hourly: flow rate; discharge pressure; inlet pressure, inlet temperature, speed; volts; amps; K watts; power factor; and time.

3. In addition to the maximum vibration levels required below, noise and vibration readings shall be taken in accordance to the test procedures and specifications provided in Appendix A3 of Annex A. The maximum acceptable noise and vibration limits that must be achieved on the complete pump unit are provided in Tables 1 and 2 of the fore mentioned Appendix.

PERFORMANCE SHEETS – GROUP #2 (IMO & WARREN)

EAC 25549

~~**VIBRATION LEVELS**~~

~~Octave Band Frequency (Hz)~~	~~Maximum Level (VdB)~~	~~Previous Test Levels (reference only)~~
~~31.5~~	~~98~~	~~83~~
~~63~~	~~99~~	~~92~~
~~125~~	~~96~~	~~95~~
~~250~~	~~93~~	~~98~~
~~500~~	~~90~~	~~100~~
~~1K~~	~~87~~	~~103~~
~~2K~~	~~84~~	~~107~~
~~4K~~	~~81~~	~~77~~

VIBRATION TEST NOTES

Vibration readings are to be taken while operating at high speed.

Motor Vibration Category: A

Vibration Block Locations for Main Lube Oil Pump

Vibration block locations are as indicated on the attached drawing.

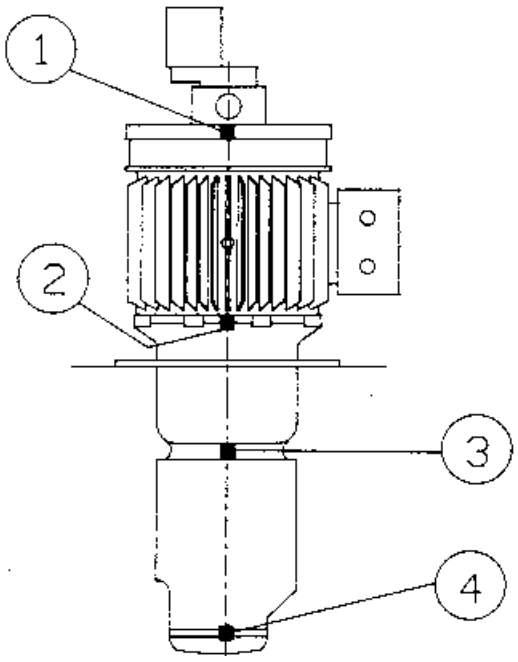

PERFORMANCE SHEETS – GROUP #2 (IMO & WARREN)

EAC 27900

PUMP ROTARY

NSN	P/N	DESCRIPTION	NSCM
4320-01-296-4239	E-854	Pump, Rotary	63857

EQUIPMENT CONFIGURATION CHECKLIST

Pump Rotary, consists of the pump only.

PERFORMANCE TEST CRITERIA

PUMP

Flow	20.5 IGPM
Discharge Pressures	29
Suction Lift	10"HG

PERFORMANCE TEST NOTES

1. Record following data hourly for 4 hours: flow rate; discharge pressure; inlet pressure, inlet temperature and speed.

2. Pump is provided without prime mover. Test facility to be set up to drive pump at specified parameters.

3. In addition to the maximum vibration levels required below, noise and vibration readings shall be taken in accordance to the test procedures and specifications provided in Appendix A3 of Annex A. The maximum acceptable noise and vibration limits that must be achieved on the complete pump unit are provided in Tables 1 and 2 of the fore mentioned Appendix.

PERFORMANCE SHEETS – GROUP #2 (IMO & WARREN)

EAC 27900

VIBRATION LEVELS

Octave Band Frequency (Hz)	Maximum Level (VdB)	Previous Test Levels (reference only)
31.5	98	92
63	99	95
125	96	92
250	93	92
500	90	95
1K	87	95
2K	84	85
4K	81	82

VIBRATION TESTING NOTES

Vibration readings are to be taken while operating unit at design flow only on blocks 1, 2, 3 and 4 as shown below.

Motor Vibration Category: B

Vibration Block Locations for Feed Transfer Pump

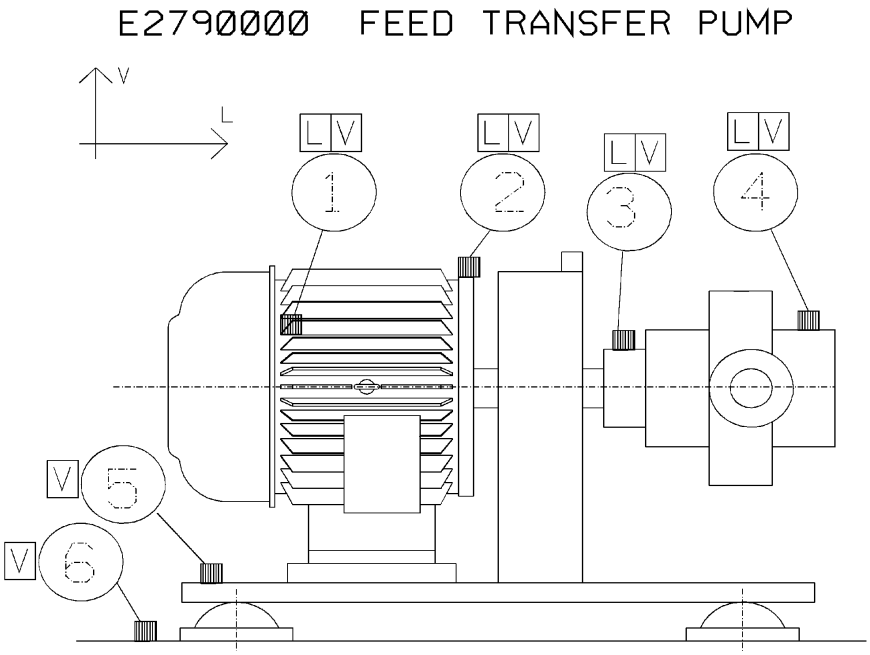

PERFORMANCE SHEETS – GROUP #2 (IMO & WARREN)

EAC 39107

IRO CLASS - JP5 FUEL SUPPLY PUMP

NSN	P/N	DESCRIPTION	NSCM
4320-21-856-0322	FX4LE312	Pump Unit, Rotary	16712

EQUIPMENT CONFIGURATION CHECKLIST

Pump Unit Rotary, consists of the pump, coupling, motor, resilient mounts and base plate.

PERFORMANCE TEST CRITERIA

PUMP

Discharge Pressure	115 PSIG
Suction Lift	10" HG
Flow	125 IGPM

MOTOR

Voltage	440 VOLTS
Current	26 AMPS
Power	19.8 KILOWATTS (MAX)
Speed	1750 RPM

PERFORMANCE TEST NOTES

Operate the unit for eight hours after readings have stabilised at rated conditions.

PERFORMANCE SHEETS – GROUP #2 (IMO & WARREN)

EAC 39107

VIBRATION LEVELS

Octave Band Frequency (Hz)	Maximum Level (VdB)	Previous Test Levels (reference only)
16	95	104
31.5	98	100
63	99	102
125	96	102
250	93	102
500	90	96
1K	87	100
2K	84	81
4K	81	86

VIBRATION TEST NOTES

VA readings to be recorded during the eight-hour performance run.

Motor vibration category: A

Vibration Block Locations for JP5 Fuel Supply Pump

Vibration block locations are as indicated on the attached drawing.

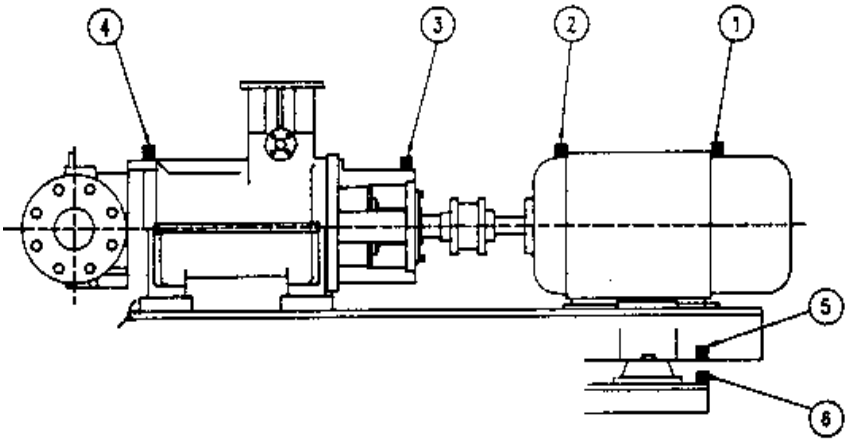

PERFORMANCE SHEETS – GROUP #2 (IMO & WARREN)

EAC 39168

HFX CLASS JP-5 FUEL SUPPLY PUMP

NSN	P/N	DESCRIPTION	NSCM
4320-01-296-4189	E-860	Pump Unit, Rotary	63857
4320-01-298-2426	E-853	Pump, Rotary	63857
6105-01-300-2443	801633-038	Motor, AC	50380

EQUIPMENT CONFIGURATION CHECKLIST

Pump Unit Rotary, consists of base plate, pump, coupling, and motor.

Pump Rotary, consists of the pump only.

Motor, AC consists of the electric motor only.

PERFORMANCE TEST CRITERIA

PUMP

Pump Speed	1750 RPM
Capacity	38.5 - 40.8 M^3
Suction Lift	-0.30 Bar G
Discharge Pressure	9.4 Bar G

MOTOR

Rating	25 HP
Speed	1750 RPM

PERFORMANCE TEST NOTES

1. Pump casing to be hydrostatic tested to 225 PSIG for 15 minutes prior to assembling.

2. Rated Application Conditions: Liquid Turbine Aviation Fuel, Viscosity 33 - 47 SSU.

3. In cases where test viscosity does not correspond to specified viscosity for service, the contractor will calculate and correlate test data to specified operating conditions.

4. Unit is to be run for eight hours at rated conditions. The mechanical seal faces are to be seated (i.e. no leakage) by the end of the test period.

5. In addition to the maximum vibration levels required below, noise and vibration readings shall be taken in accordance to the test procedures and specifications provided in Appendix A3 of Annex A. The maximum acceptable noise and vibration limits that must be achieved on the complete pump

unit are provided in Tables 1 and 2 of the fore mentioned Appendix.

~~**VIBRATION LEVELS**~~

~~Octave Band Frequency (Hz)~~	~~Maximum Level (VdB)~~	~~Previous Test Levels (reference only)~~
~~31.5~~	~~98~~	~~96~~
~~63~~	~~99~~	~~92~~
~~125~~	~~96~~	~~82~~
~~250~~	~~93~~	~~72~~
~~500~~	~~90~~	~~62~~
~~1K~~	~~87~~	~~62~~
~~2K~~	~~84~~	~~62~~
~~4K~~	~~81~~	~~62~~

VIBRATION TEST NOTES

VA readings to be recorded during the eight-hour performance run. Vibration readings are to be taken while operating unit at design flow only on blocks 1, 2, 3, and 4 as shown below.

Motor vibration category: A

Vibration Block Locations for JP5 Fuel Supply Pump

Vibration block locations are as indicated on the attached drawing.

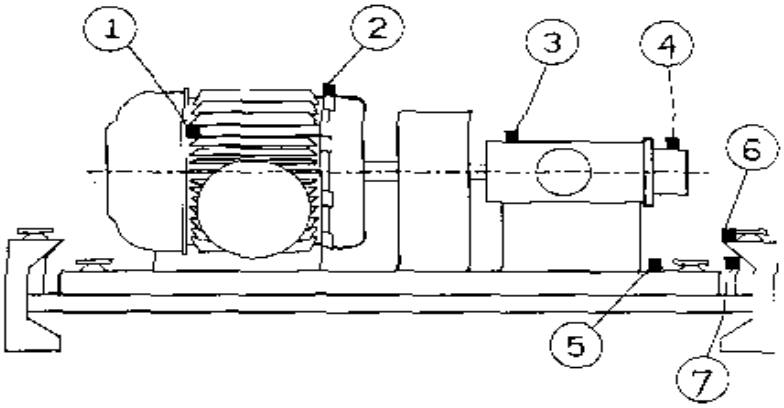

PERFORMANCE SHEETS – GROUP #4 (INGERSOLL-DRESSER)

DESCRIPTION	NSN	PART NO.	MANUFACTURER	EAC
PUMP,CENTRIFUGAL	4320-21-904-1991	FF704103	Ingersoll-Dresser	25534
PUMP,CENTRIFUGAL	4320-21-904-1992	FF704204	Ingersoll-Dresser	25534
PUMP UNIT,CENTRIFUGAL	4320 21 856 0286	3NVMK50	Ingersoll-Dresser	27334
PUMP UNIT,CENTRIFUGAL	4320 21 856 0290	1-1-2NVMK20	Ingersoll-Dresser	27335
PUMP UNIT,CENTRIFUGAL	4320-21-904-1983	15487N18 or 13869N18	Ingersoll-Dresser	27876
PUMP,CENTRIFUGAL	4320-21-907-5967	FF704191	Ingersoll-Dresser	27877
PUMP UNIT,CENTRIFUGAL	4320-21-904-1976	Ff704100-0	Ingersoll-Dresser	27878
PUMP UNIT,CENTRIFUGAL	4320-21-904-1965	FF704106-0	Ingersoll-Dresser	27879
PUMP UNIT,CENTRIFUGAL	4320-21-904-1985	FF704112-0	Ingersoll-Dresser	27880
PUMP UNIT,CENTRIFUGAL	4320-21-904-1989	FF704118-0	Ingersoll-Dresser	27931
PUMP UNIT,CENTRIFUGAL	4320-21-904-1973	FF704109-0	Ingersoll-Dresser	39164

PERFORMANCE SHEETS – GROUP #4 (INGERSOLL-DRESSER)

EAC 25534

HFX CLASS - GEAR DRIVEN MAIN SEA WATER PUMP

NSN	P/N	DESCRIPTION	NSCM
4320-21-904-1991	FF704103	Pump, Centrifugal (Stbd)	05563
4320-21-904-1992	FF704204	Pump, Centrifugal (Port)	05563

EQUIPMENT CONFIGURATION CHECKLIST

Pump, Centrifugal consists of pump only.

PERFORMANCE TEST CRITERIA

Flow	175 M^3/HR
Total Head	0.81 Bar
Shaft Speed	1200 RPM
Motor Rating	7 BHP

PERFORMANCE TEST NOTES

Driver not supplied. Test facility to be set up to demonstrate performance.

VIBRATION LEVELS

Octave Band Frequency (Hz)	Maximum Level (VdB)
31.5	97
63	100
125	97
250	93
500	90
1K	87
2K	83
4K	80

VIBRATION TESTING NOTES

VA testing to be done on test base plate (to be fitted with VA blocks) mounted via resilient mounts sized according to weight.

PERFORMANCE SHEETS – GROUP #4 (INGERSOLL-DRESSER)

EAC 27334

IRO CLASS - MAIN FIRE PUMP

NSN	P/N	DESCRIPTION	NSCM
4320-21-856-0286	3NMK50	Pump Unit, Centrifugal	05563

EQUIPMENT CONFIGURATION CHECKLIST

Pump Unit, Centrifugal, consists of the pump, electric motor, and coupling.

PERFORMANCE TEST CRITERIA

Flow	325 IGPM
Discharge Pressures	125 PSIG
Suction Lift	Flooded

MOTOR

Rating	50 BHP
Speed (Synchronous)	3535 RPM
Volts	440
Amps	61
Hertz	60
Phase	3

PERFORMANCE TEST NOTES

Record following data hourly for 4 hours: flow rate; discharge pressure; inlet pressure, inlet temperature, speed; volts; amps; K watts; power factor; and time.

PERFORMANCE SHEETS – GROUP #4 (INGERSOLL-DRESSER)

EAC 27334

VIBRATION LEVELS

Octave Band Frequency (Hz)	Maximum Level (VdB)
31.5	100
63	103
125	100
250	105
500	104
1K	96
2K	102
4K	100

VIBRATION TESTING NOTES

Vibration readings are to be taken while operating at design flow only on blocks 1, 2, 3 and 4 as shown below.

Motor Vibration Category: A

Vibration Block Locations for 280 CL Main Fire Pump

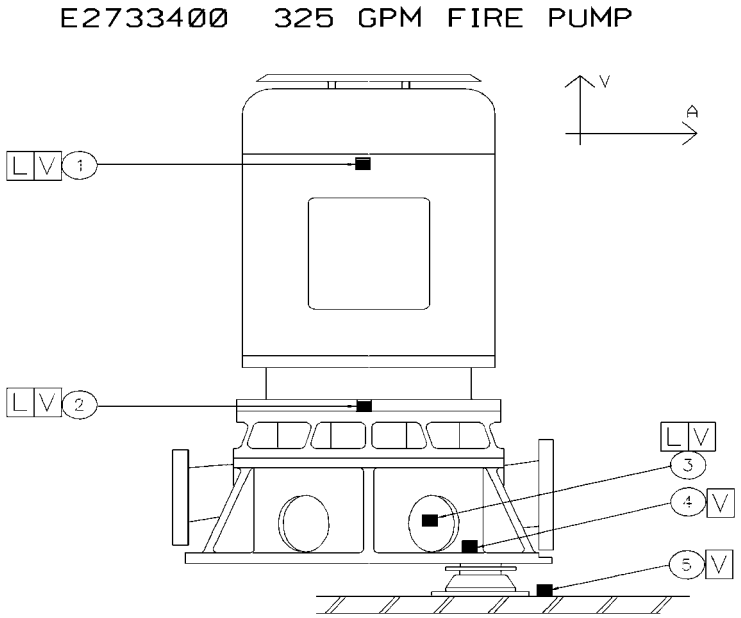

PERFORMANCE SHEETS – GROUP #4 (INGERSOLL-DRESSER)

EAC 27335

IRO CLASS - JOCKEY FIRE PUMP

NSN:	P/N	ITEM NAME	NSCM
4320-21-856-0290	1-1-2NVMK20	Pump Unit, Centrifugal	05563

EQUIPMENT CONFIGURATION CHECKLIST

Pump Unit, Centrifugal, consists of the pump, electric motor, and coupling.

PERFORMANCE TEST CRITERIA

PUMP

Flow	100 IGPM
Discharge Pressures (Total Head)	125PSIG
Suction Lift	Flooded

MOTOR

Rating	20 BHP
Speed (Synchronous)	3535 RPM
Frame Size	286PX
Volts	440
Amps	24.5
Hertz	60
Phase	3

PERFORMANCE TEST NOTES

Record following data hourly for 4 hours: flow rate; discharge pressure; inlet pressure, inlet temperature, speed; volts; amps; K watts; power factor; and time.

PERFORMANCE SHEETS – GROUP #4 (INGERSOLL-DRESSER)

EAC 27335

VIBRATION LEVELS

Octave Band Frequency (Hz)	Maximum Level (VdB)
31.5	97
63	100
125	97
250	102
500	101
1K	93
2K	99
4K	97

VIBRATION TESTING NOTES

Vibration readings are to be taken while operating at design flow only on blocks 1, 2, 3 and 4 as shown below.

Motor Vibration Category: A

Vibration Block Locations for 280 CL Jockey Fire Pump

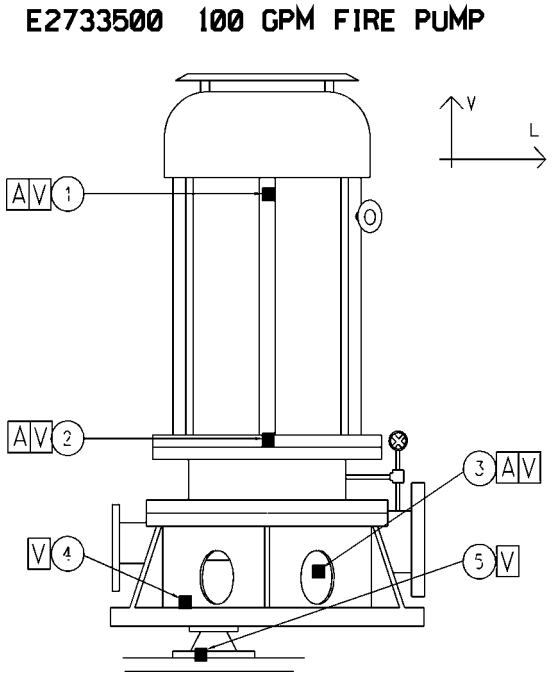

PERFORMANCE SHEETS – GROUP #4 (INGERSOLL-DRESSER)

EAC 27348

PUMP UNIT CENTRIFUGAL

NSN:	P/N	ITEM NAME	NSCM
4320-21-856-0175	FF-701,272	Pump Unit, Centrifugal	05563
4310-21-852-4187	MD2L	Vacuum Pump Unit, Rotary	42280

EQUIPMENT CONFIGURATION CHECKLIST

Pump Unit Centrifugal, consists of the pump, motor and primer pump.

Vacuum Pump Unit consists of the primer pump end only.

PERFORMANCE TEST CRITERIA

PUMP

Flow	50 IGPM
Discharge Pressures	50 PSIG
Suction Head	7-15psia

PRIMER PUMP

Pump Capacity	11 cubic feet per min
Vacuum	10 in HG
BHP	1.0
Seal Water Flow	1/8 IGPM Minimum

MOTOR

Rating	7.5 BHP
Speed (Synchronous)	3600 RPM
Frame Size	215 NY
Volts	440
Amps	9.3
Hertz	60
Phase	3

PERFORMANCE TEST NOTES

Record following data hourly for 4 hours: flow rate; discharge pressure; inlet pressure, inlet temperature, primer pump vacuum, speed; volts; amps; K watts; power factor; and time.

PERFORMANCE SHEETS – GROUP #4 (INGERSOLL-DRESSER)

EAC 27348

VIBRATION LEVELS

Octave Band Frequency (Hz)	Maximum Level (VdB)
31.5	110
63	110
125	100
250	105
500	105
1K	104
2K	110
4K	90

VIBRATION TESTING NOTES

Vibration readings are to be taken while operating unit at design only on blocks 1, 2, 3, 4 and 5 as shown below.

Motor Vibration Category: B

Vibration Block Locations for Fresh Water Pump

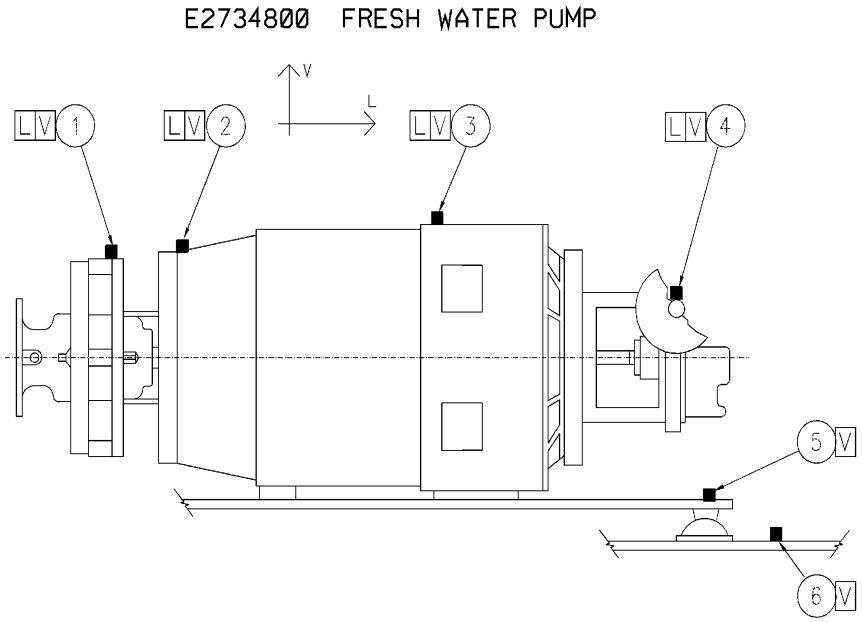

PERFORMANCE SHEETS – GROUP #4 (INGERSOLL-DRESSER)

EAC 27876

HFX CLASS - MOTOR DRIVEN FIRE PUMP

NSN	P/N	DESCRIPTION	NSCM
4320-21-904-1983	15487N18 or 13869N18	Pump Unit, Centrifugal	05563

EQUIPMENT CONFIGURATION CHECKLIST

Pump Unit Centrifugal consists of pump and motor.

PERFORMANCE TEST CRITERIA

PUMP

Flow	146 M^3/HR
Total Head	10 Bar

MOTOR

Rating	75 HP
Speed (Synchronous)	3550 RPM
Volts	440
Amps	85
Hertz	60
Phase	3

PERFORMANCE TEST NOTES

1. The contractor shall test the hydraulic performance and vibration levels of each pump and motor on a suitable test loop.

2. Pump characteristic curves will be produced. Specific readings will be taken as close as possible to the specified points for each pump.

3. In addition to the maximum vibration levels required below, noise and vibration readings shall be taken in accordance to the test procedures and specifications provided in Appendix A3 of Annex A. The maximum acceptable noise and vibration limits that must be achieved on the complete pump unit are provided in Tables 1 and 2 of the fore mentioned Appendix.

PERFORMANCE SHEETS – GROUP #4 (INGERSOLL-DRESSER)

EAC 27876

~~VIBRATION LEVELS~~

~~Octave Band Frequency (Hz)~~	~~Maximum Level (VdB)~~
~~31.5~~	~~91~~
~~63~~	~~94~~
~~125~~	~~91~~
~~250~~	~~102~~
~~500~~	~~96~~
~~1K~~	~~90~~
~~2K~~	~~92~~
~~4K~~	~~94~~

VIBRATION TEST NOTES

Motor Vibration Category: A

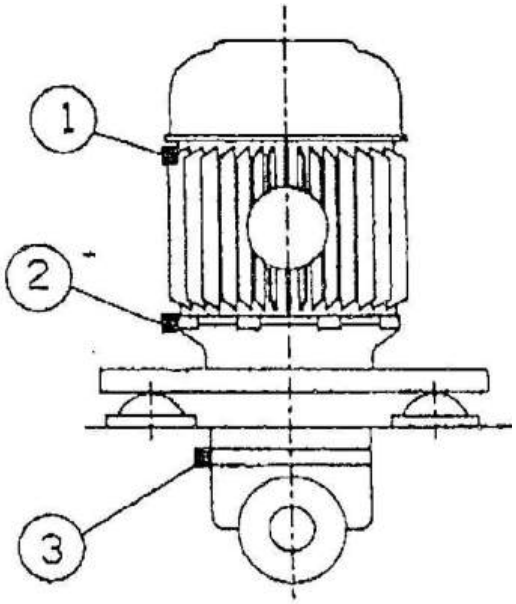

Vibration block locations are as indicated on the attached drawing.

Block 1: On motor body/frame, left side (when facing terminal box cover), 1 inch below fan hood.

Block 2: On motor drive end head flange, left side.
Block 3: On pump support head flange, left side.

PERFORMANCE SHEETS – GROUP #4 (INGERSOLL-DRESSER)

EAC 27877

HFX CLASS - DIESEL DRIVEN FIRE PUMP

NSN	P/N	DESCRIPTION	NSCM
4320-21-907-5967	FF704191	Pump, Centrifugal	05563

EQUIPMENT CONFIGURATION CHECKLIST

Pump, Centrifugal consists of pump only.

PERFORMANCE TEST CRITERIA

Flow	146 M^3/HR
Total Head	10 Bar
Shaft Speed	2700 RPM
Motor Rating	75 HP

PERFORMANCE TEST NOTES

Diesel driver not supplied. Test facility to be set up to demonstrate performance.

VIBRATION LEVELS

Octave Band Frequency (Hz)	Maximum Level (VdB)
31.5	109
63	105
125	95
250	100
500	92
1K	92
2K	88
4K	88

VIBRATION TESTING NOTES

VA testing to be done on test base plate (to be fitted with VA blocks) mounted via resilient mounts sized according to weight.

PERFORMANCE SHEETS – GROUP #4 (INGERSOLL-DRESSER)

EAC 27878

HFX CLASS - MAIN FRESH WATER PUMP

NSN	P/N	DESCRIPTION	NSCM
4320-21-904-1976	FF704100-0	Pump Unit, Centrifugal	05563

EQUIPMENT CONFIGURATION CHECKLIST

Pump Unit Centrifugal consists of pump and motor.

PERFORMANCE TEST CRITERIA

PUMP

Flow	0.55 M^3/HR
Total Head	0.55 Bar

MOTOR

Rating	0.5 HP
Speed (Synchronous)	1800 RPM
Volts	440
Amps	0.8
Hertz	60
Phase	3

PERFORMANCE TEST NOTES

The contractor shall test the hydraulic performance and vibration levels of each pump and motor on a suitable test loop.

PERFORMANCE SHEETS – GROUP #4 (INGERSOLL-DRESSER)

EAC 27878

VIBRATION LEVELS

Octave Band Frequency (Hz)	Maximum Level (VdB)
31.5	90
63	92
125	89
250	85
500	83
1K	80
2K	77
4K	74

VIBRATION TEST NOTES

Motor Vibration Category: C

Vibration blocks to be mounted on pump base plate.

PERFORMANCE SHEETS – GROUP #4 (INGERSOLL-DRESSER)

EAC 27879

HFX CLASS - MAIN FRESH WATER PUMP

NSN	P/N	DESCRIPTION	NSCM
4320-21-904-1965	FF704106-0	Pump Unit, Centrifugal	05563

EQUIPMENT CONFIGURATION CHECKLIST

Pump Unit Centrifugal consists of pump end, vacuum pump, motor, piping, and check, flex and relief valves.

PERFORMANCE TEST CRITERIA

PUMP

Flow	14 M^3/HR
Total Head	4 Bar

MOTOR

Rating	7.5 HP
Speed (Synchronous)	3550 RPM
Volts	440
Amps	9.1
Hertz	60
Phase	3

PERFORMANCE TEST NOTES

1. Performance of priming pump to be demonstrated with 7 M suction. Fresh water pump to maintain prime after initial priming.

2. The contractor shall test the hydraulic performance and vibration levels of each pump and motor on a suitable test loop.

3. Pump characteristic curves will be produced. Specific readings will be taken as close as possible to the specified points for each pump.

4. In addition to the maximum vibration levels required below, noise and vibration readings shall be taken in accordance to the test procedures and specifications provided in Appendix A3 of Annex A. The maximum acceptable noise and vibration limits that must be achieved on the complete pump unit are provided in Tables 1 and 2 of the fore mentioned Appendix.

PERFORMANCE SHEETS – GROUP #4 (INGERSOLL-DRESSER)

EAC 27879

~~**VIBRATION LEVELS**~~

~~Octave Band Frequency (Hz)~~	~~Maximum Level (VdB)~~
~~31.5~~	~~87~~
~~63~~	~~90~~
~~125~~	~~88~~
~~250~~	~~93~~
~~500~~	~~93~~
~~1K~~	~~94~~
~~2K~~	~~95~~
~~4K~~	~~92~~

VIBRATION TEST NOTES

Motor Vibration Category: B

Vibration block locations are as indicated on the attached drawing.

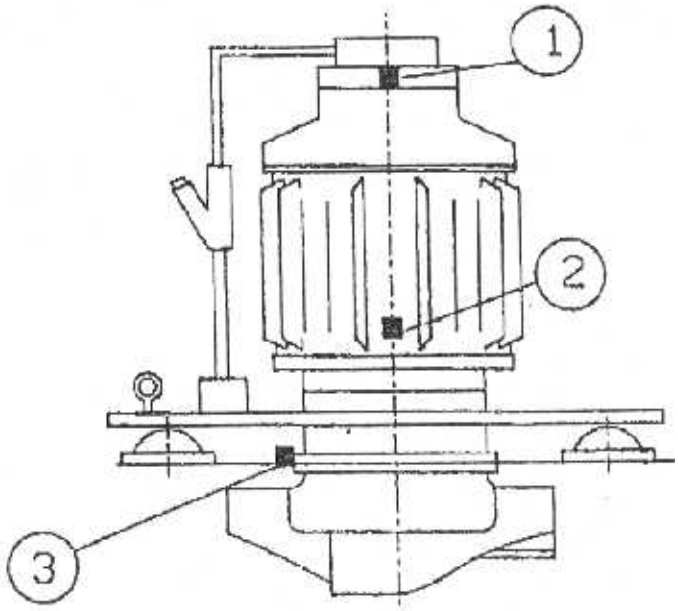

Block 1: On motor non-drive end, top flange, back side (when facing the terminal box cover)
Block 2: On motor body / frame, 1 inch above drive end head flange, back side.
Block 3: On pump support head flange, right side.

PERFORMANCE SHEETS – GROUP #4 (INGERSOLL-DRESSER)

EAC 27880

HFX CLASS - AULILIARY SEA WATER CIRCULATING PUMP

NSN	P/N	DESCRIPTION	NSCM
4320-21-904-1985	FF704112-0	Pump Unit, Centrifugal	05563

EQUIPMENT CONFIGURATION CHECKLIST

Pump Unit Centrifugal consists of pump and motor.

PERFORMANCE TEST CRITERIA

PUMP

Flow	154 M^3/HR
Total Head	1.2 Bar

MOTOR

Rating	10 HP
Speed (Synchronous)	1150 RPM
Volts	440
Amps	14
Hertz	60
Phase	3

PERFORMANCE TEST NOTES

1. The contractor shall test the hydraulic performance and vibration levels of each pump and motor on a suitable test loop.

2. Pump characteristic curves will be produced. Specific readings will be taken as close as possible to the specified points for each pump.

3. The contractor shall demonstrate the watertight integrity of the auxiliary seawater circulating pump motor. He will carry out a vacuum/pressure test, which will demonstrate that the Auxiliary Seawater Circulating Pump is water proof to a depth of 15 ft. while running.

4. In addition to the maximum vibration levels required below, noise and vibration readings shall be taken in accordance to the test procedures and specifications provided in Appendix A3 of Annex A. The maximum acceptable noise and vibration limits that must be achieved on the complete pump unit are provided in Tables 1 and 2 of the fore mentioned Appendix.

PERFORMANCE SHEETS – GROUP #4 (INGERSOLL-DRESSER)

EAC 27880

~~**VIBRATION LEVELS**~~

~~Octave Band Frequency (Hz)~~	~~Maximum Level (VdB)~~
~~31.5~~	~~90~~
~~63~~	~~92~~
~~125~~	~~89~~
~~250~~	~~85~~
~~500~~	~~83~~
~~1K~~	~~80~~
~~2K~~	~~77~~
~~4K~~	~~74~~

VIBRATION TEST NOTES

Motor Vibration Category: B

Vibration block locations are as indicated on the attached drawing.

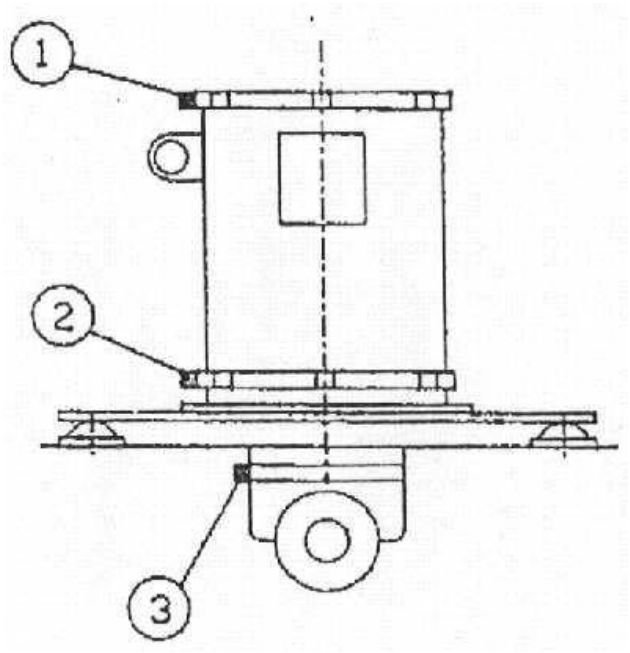

Block 1: On motor non-drive end, head flange, left side (when facing the terminal box cover)
Block 2: On motor drive end head flange, left side.
Block 3: On pump support head flange, left side.

PERFORMANCE SHEETS – GROUP #4 (INGERSOLL-DRESSER)

EAC 27931

HFX CLASS - JOCKEY FIRE PUMP

NSN	P/N	DESCRIPTION	NSCM
4320-21-904-1989	FF7044118-0	Pump Unit, Centrifugal	05563

EQUIPMENT CONFIGURATION CHECKLIST

Pump Unit Centrifugal consist of pump and motor

PERFORMANCE TEST CRITERIA

PUMP

Flow	80 M^3/HR
Total Head	10 Bar

MOTOR

Rating	50 HP
Speed (Synchronous)	3550 RPM
Volts	440
Amps	58
Hertz	60
Phase	3

PERFORMANCE TEST NOTES

1. The contractor shall test the hydraulic performance and vibration levels of each pump and motor on a suitable test loop.

2. Pump characteristic curves will be produced. Specific readings will be taken as close as possible to the specified points for each pump.

3. In addition to the maximum vibration levels required below, noise and vibration readings shall be taken in accordance to the test procedures and specifications provided in Appendix A3 of Annex A. The maximum acceptable noise and vibration limits that must be achieved on the complete pump unit are provided in Tables 1 and 2 of the fore mentioned Appendix.

APPENDIX 7
To: ANNEX A To W8482-116492
Dated: 5 Nov 2010

PERFORMANCE SHEETS – GROUP #4 (INGERSOLL-DRESSER)

EAC 27931

~~**VIBRATION LEVELS**~~

~~Octave Band Frequency (Hz)~~	~~Maximum Level (VdB)~~
~~31.5~~	~~91~~
~~63~~	~~94~~
~~125~~	~~91~~
~~250~~	~~96~~
~~500~~	~~90~~
~~1K~~	~~91~~
~~2K~~	~~98~~
~~4K~~	~~92~~

VIBRATION TEST NOTES

Motor Vibration Category: A

Vibration block locations are as indicated on the attached drawing.

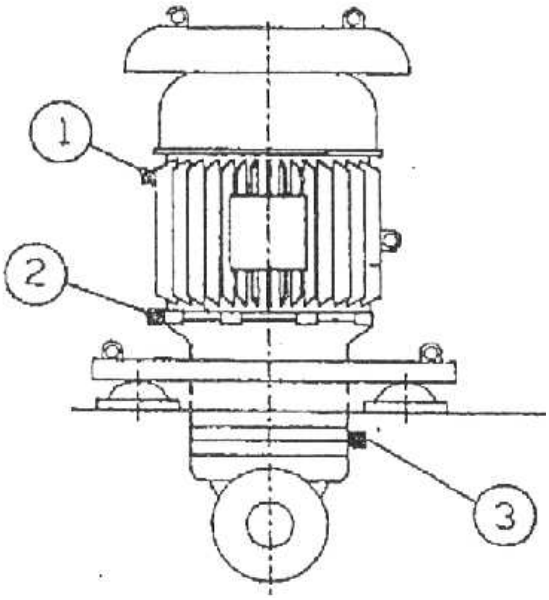

Block 1: On motor body/frame, left side (when facing terminal box cover), 1 in below fan hood.
Block 2: On motor drive end head flange, left side.
Block 3: On pump support head flange, right side.

PERFORMANCE SHEETS – GROUP #4 (INGERSOLL-DRESSER)

EAC 39164

HFX CLASS - HELO WASHDOWN PUMP

NSN	P/N	DESCRIPTION	NSCM
4320-21-904-1973	FF704109-0	Pump Unit, Centrifugal	05563

EQUIPMENT CONFIGURATION CHECKLIST

Pump Unit Centrifugal consists of pump and motor.

PERFORMANCE TEST CRITERIA

PUMP

Flow	2.4 M^3/HR
Total Head	5 Bar

MOTOR

Rating	5 HP
Speed (Synchronous)	3550 RPM
Volts	440
Amps	6.3
Hertz	60
Phase	3

PERFORMANCE TEST NOTES

The contractor shall test the hydraulic performance and vibration levels of each pump and motor on a suitable test loop.

Pump characteristic curves will be produced. Specific readings will be taken as close as possible to the specified points for each pump.

PERFORMANCE SHEETS – GROUP #4 (INGERSOLL-DRESSER)

EAC 39164

VIBRATION LEVELS

Octave Band Frequency (Hz)	Maximum Level (VdB)
31.5	87
63	90
125	86
250	90
500	82
1K	77
2K	74
4K	70

VIBRATION TEST NOTES

Motor Vibration Category: B

Vibration block locations are as indicated on the attached drawing.

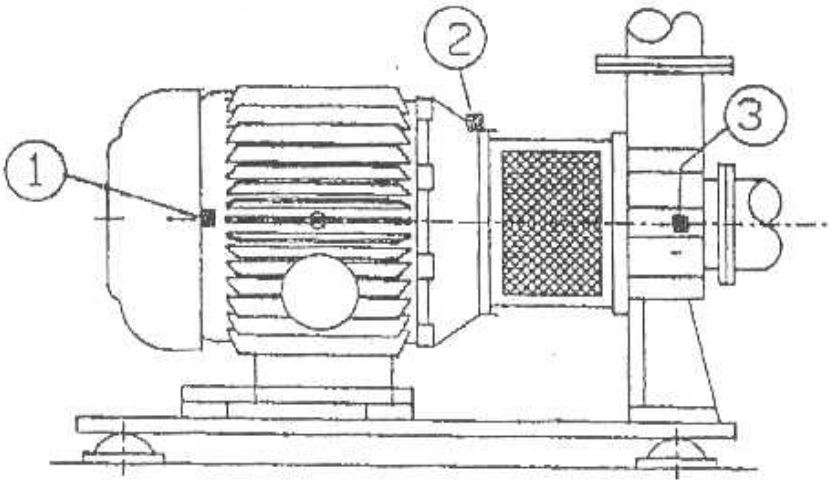

Block 1: On motor non-drive end housing, front side (when facing the terminal box cover), on boss 2 inches above cooling ribs.
Block 2: On motor drive end coupling flange, top side.
Block 3: On pump impeller casing, front side.

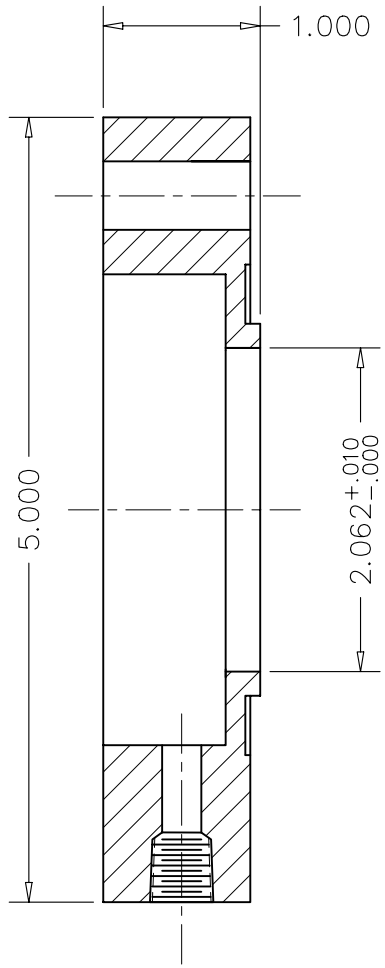

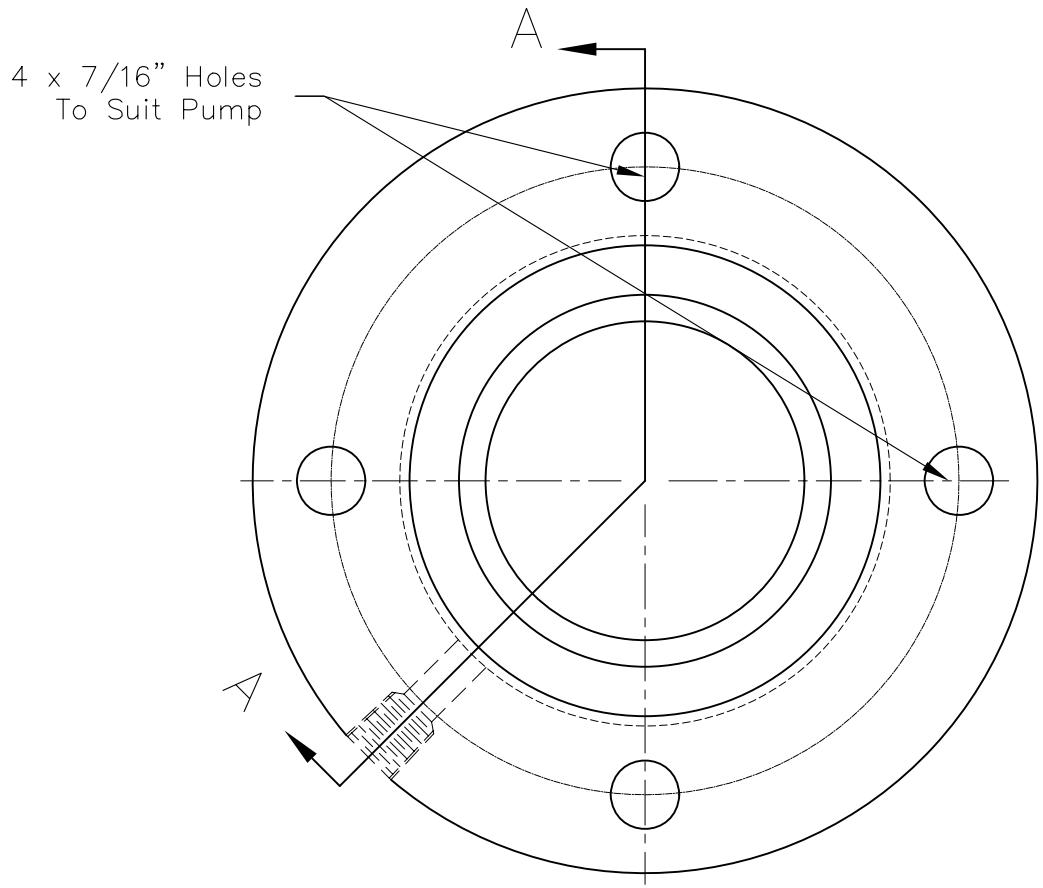

Sect A-A

P/N 901169

316 STAINLESS STEEL

Index	Nomenclature	REV. Rev	ECO Date	By	Checked By	Dept. Mgr.	Modifications

Affected Documents | Scale: 1=1 | Any documented scale ratio is for reference only.

All Tolerances to follow:

ISO 2768	−1	& −2
Machining	m	K
Weldments	v	–
Sheet Metal	v	–

Castings, ISO 8062

Unless Otherwise Indicated

Surface Finish Ref: ISO 1302

Welding Symbols: ANSI Y32.3

CAUTION: This is a metric drawing. All dimensions are in millimeters unless otherwise indicated.

(First Angle Projection)

R & D CUSTOM FABRICATION
P.O. Box 25036
Halifax, Nova Scotia.
Canada, B3M 4H4

Checked By: | Filename: | Date No. Issued:

DRAWING # 901169

Border Size 3

ADAPTER FOR 180-16 SEAL
HULL & FIRE PUMP

MATERIAL: 316 SS

REV 6

Creation Date: 11/19/00 | By: JIM MISENER | Filename: | MMA Version: | AUTOCAD

Plotter Time Stamp – –