Public Works and Government Services Canada

Travaux publics et Services gouvernementaux Canada

RETURN BIDS TO:
RETOURNER LES SOUMISSIONS À:
Bid Receiving - PWGSC / Réception des soumissions - TPSGC
11 Laurier St. / 11, rue Laurier
Place du Portage, Phase III
Core 0A1 / Noyau 0A1
Gatineau, Québec K1A 0S5
Bid Fax: (819) 997-9776

SOLICITATION AMENDMENT
MODIFICATION DE L'INVITATION

The referenced document is hereby revised; unless otherwise indicated, all other terms and conditions of the Solicitation remain the same.

Ce document est par la présente révisé; sauf indication contraire, les modalités de l'invitation demeurent les mêmes.

Comments - Commentaires

Vendor/Firm Name and Address
Raison sociale et adresse du fournisseur/de l'entrepreneur

Issuing Office - Bureau de distribution
Vehicles & Industrial Products Division
11 Laurier St./11, rue Laurier
7A2, Place du Portage, Phase III
Gatineau, Québec K1A 0S5

Title - Sujet TRUCKS, DUMP, CLASS 8, HEAVY	
Solicitation No. - N° de l'invitation W8476-134004/A	**Amendment No. - N° modif.** 007
Client Reference No. - N° de référence du client W8476-134004	**Date** 2013-03-20
GETS Reference No. - N° de référence de SEAG PW-$$HP-539-61601	
File No. - N° de dossier hp539.W8476-134004	**CCC No./N° CCC - FMS No./N° VME**
Solicitation Closes - L'invitation prend fin at - à 02:00 PM on - le 2013-04-03	**Time Zone** **Fuseau horaire** Eastern Daylight Saving Time EDT
F.O.B. - F.A.B. Specified Herein - Précisé dans les présentes **Plant-Usine:** ☐ **Destination:** ☐ **Other-Autre:** ☑	
Address Enquiries to: - Adresser toutes questions à: Cafferty, Kathy	**Buyer Id - Id de l'acheteur** hp539
Telephone No. - N° de téléphone (819) 956-5917 ( )	**FAX No. - N° de FAX** ( ) -
Destination - of Goods, Services, and Construction: **Destination - des biens, services et construction:**	

Instructions: See Herein

Instructions: Voir aux présentes

Delivery Required - Livraison exigée	**Delivery Offered - Livraison proposée**
Vendor/Firm Name and Address **Raison sociale et adresse du fournisseur/de l'entrepreneur** **Telephone No. - N° de téléphone** **Facsimile No. - N° de télécopieur**	
Name and title of person authorized to sign on behalf of Vendor/Firm (type or print) **Nom et titre de la personne autorisée à signer au nom du fournisseur/ de l'entrepreneur (taper ou écrire en caractères d'imprimerie)** **Signature** **Date**	

Canada

1. This Solicitation Amendment 007 is raised to delete Annex “B” - Purchase Description in its entirety and to insert a revised Annex “B” - Purchase Description.

2. All references to Annex “B” - Purchase Description - Class 8 Heavy Trucks dated 16 November 2012 throughout the entire solicitation must be amended to read Annex “B” Purchase Description - Class 8 Heavy Trucks dated 05 March 2013.

ALL OTHER TERMS AND CONDITIONS OF THIS SOLICITATION REMAIN UNCHANGED.

05 March 2013

PURCHASE DESCRIPTION

FOR

CLASS 8 HEAVY TRUCKS

1. SCOPE

1.1 Scope - This Purchase Description describes the requirements for **4x2, 6x4 and 6x6** Class 8 Heavy Trucks.

1.2 Instructions - The following instructions apply to this Purchase Description:

(a) Requirements, which are identified by the word "***shall***", are mandatory. Deviations will not be permitted;

(b) Requirements identified by "***shall***$^{(E)}$" are mandatory. The Technical Authority will consider substitutes/alternatives for acceptance as an Equivalent;

(c) Requirements identified with a "will" define actions to be performed by Canada and require no action/obligation on the Contractor's part;

(d) Where "***shall***", "***shall***$^{(E)}$", or "will" are not used, the information provided is for guidance only;

(e) In this document "provided" ***shall*** mean "provided and installed";

(f) Where technical certification is required, a copy of the certification or an acceptable proof of compliance ***shall*** be provided upon request;

(g) Metric measurements ***shall*** be used to define the requirement. Other measurements are for reference only and may not be exact conversions; and

(h) Dimensions stated as nominal ***shall*** be treated as approximate dimensions. Nominal dimensions reflect a method by which materials or products are generally identified for sale commercially, but which differ from the actual dimensions.

1.2.1 Definitions - The following definitions apply to the interpretation of this Purchase Description:

(a) "Technical Authority" - The government official responsible for technical content of this requirement;

(b) "Equivalent" - A standard, means, or component type, which has been accepted by the Technical Authority as meeting the specified requirements for form, fit, function and performance;

(c) "Proof of Compliance" - A document such as a brochure, a third party test report, a report generated by third party software, or a certificate of attestation signed by a senior representative of the Original Equipment Manufacturer (such as a certified engineer)

indicating the performance and/or feature specified;

(d) “Curb Weight” - The weight of a ground vehicle that includes fuel, lubricants, coolant and on-vehicle materiel including dump box or dump spreader, front plow and side wing. This excludes payload;

(e) “Payload” - The actual weight of cargo and passengers being carried on the vehicle (Gross Vehicle Weight (GVW) - Curb weight = payload). It includes the passengers and cargo weight. The cargo weight is to be calculated as follows: The dump box cubic yard X gravel and sand weight (1,224 kg - 2700 lbs per cubic yard); and

(f) “Vehicle” – Is a complete vehicle equipped with equipment variants, and/or accessories, as detailed in Configuration Capability Tables and Requirement Summary Table.

1.3 CONFIGURATION CAPABILITY TABLES - The following table details the **minimum** design requirements, which ***shall*** be met.

TABLE 1 – CONFIGURATION A - TRUCK, 4X2, DUAL WHEELS					
	GVWR	GAWR FRONT	GAWR REAR	PAYLOAD	TOWED LOAD
WEIGHT RATINGS KG (LBS)	16,329 (36,000)	6,350 (14,000)	9,979 (22,000)	Item I 6,350 (14,000) Note: Configuration A equipped with 3.97 m^3 (5.2 yd^3) dump/spreader & reversible plow	6,804 (15,000)
VEHICLE TOP SPEED	105 km/h (65 mph)				
VEHICLE GRADEABILITY	31.6 Percent at 3.2 km/h (2 mph)				
FRAME RBM (Pounds-inch)	3,700,200				
ENGINE HP	350				

TABLE 2 – CONFIGURATION B - TRUCK, 6x4, DUAL WHEELS					
	GVWR	GAWR FRONT	GAWR REAR	PAYLOAD	TOWED LOAD
WEIGHT RATINGS KG (LBS)	26,762 (59,000)	9,072 (20,000)	17,690 (39,000)	Item II 11,022 (24,300) Note: Configuration B equipped with 6.88 cu m (9 yd^3) dump, reversible plow & side wing	6,804 (15,000)
VEHICLE TOP SPEED	105 km/h (65 mph)				
VEHICLE GRADEABILITY	31.6 Percent at 3.2 km/h (2 mph)				
TANDEM SPACING	Nominal 54-Inches				
FRAME RBM (Pounds-inch)	3,700,200				
ENGINE HP	400				

TABLE 3 – CONFIGURATION C - TRUCK, 6X6, DUAL WHEELS						
	GVWR	GAWR FRONT	GAWR REAR	LIFT AXLE	PAYLOAD	TOWED LOAD
WEIGHT RATINGS KG (LBS)	29,937 (66,000)	9,072 (20,000)	20,865 (46,000)	If required for load distribution	Item III 14,696 (32,400) Note: Configuration C equipped with 9.17 m^3 (12 yd^3) dump/spreader, one way plow & side wing	13,608 (30,000)
VEHICLE TOP SPEED	105 km/h (65 mph)					
VEHICLE GRADEABILITY	31.6 Percent at 3.2 km/h (2 mph)					
FRAME RBM (Pounds-inch)	3,700,200					
ENGINE HP	420					

TABLE 4 – CONFIGURATION D – TRUCK, 6x4, DUAL WHEELS						
	GVWR	GAWR FRONT	GAWR REAR	LIFT AXLE	PAYLOAD	TOWED LOAD
WEIGHT RATINGS KG (LBS)	32,659 (72,000)	8,164 (18,000)	18,144 (40,000)	If required for load distribution	Item IV 17,146 (37,800) Note: Configuration D equipped with 10.7 m^3 (14 yd^3) dump	13,608 (30,000)
VEHICLE TOP SPEED	105 km/h (65 mph)					
VEHICLE GRADEABILITY	31.6 Percent at 3.2 km/h (2 mph)					
FRAME RBM (Pounds-inch)	3,700,200					
ENGINE HP	450					

TABLE 5 - CONFIGURATION E – TRUCK, 6x4, DUAL WHEELS						
	GVWR	GAWR FRONT	GAWR REAR	LIFT AXLE	PAYLOAD	TOWED LOAD
WEIGHT RATINGS KG (LBS)	39,009 (86,000)	9,072 (20,000)	20,865 (46,000)	9,072 (20,000)	24,494 (54,000) Note: Configuration E equipped with 16.82 m^3 (20 yd^3) w/ heavy-duty electric vibrator	13,608 (30,000)
VEHICLE TOP SPEED	105 km/h (65 mph)					
VEHICLE GRADEABILITY	31.6 Percent at 3.2 km/h (2 mph)					
FRAME RBM (Pounds-inch)	3,800,400					
ENGINE HP	455					

1.4 REQUIREMENT SUMMARY TABLE – The contractor ***shall*** provide the equipment options for each Item as requested in the **REQUIREMENT SUMMARY TABLE:**

Table 6														
	Item	Config_ uration	Equipment Options										Qty	Destination
			1	2	3	4	5	6	7	8	9	10		
			Lift Axle	6.88 m^3 (9 yd^3) Dump Body	10.7 m^3 (14 yd^3) Dump Body	16.82 m^3 (20 yd^3) Dump Body with a Heavy Duty Electric Vibrator	3.97 m^3 (5.2 yd^3) Dump/ Spreader	9.17 m^3 (12 yd^3) Dump/ Spreader	Drive Frame & Front Hitch	One Way Plow	Reversible Plow	Side Wing		
Para #			3.7.14.1	4.1	4.2	4.3	4.4	4.5	4.6	4.7	4.8	4.9		
	I	A 4x2					✓		✓		✓		1	Kingston
	II	B 6x4		✓					✓		✓	✓	1	Petawawa
													2	Edmonton
													1	St Jean
	III	C 6x6	If required					✓	✓	✓		✓	2	Petawawa
	IV	D 6x4	If required		✓								2	Petawawa
	V	E 6x4	✓			✓							2	Kingston

2. APPLICABLE DOCUMENTS

2.1 **NOT ALLOCATED** - (Government Furnished Documents)

2.2 **Other Publications** - The following documents form part of this Purchase Description. Effective dates ***shall*** be those in effect upon the date of manufacture. Sources are as shown:

Transport Canada Consolidation of the Motor Vehicle Safety Act and Motor Vehicle Safety Regulations (MVSR) and all applicable revisions TP4360E

Canadian Communication Group - Publishing
Ottawa, Canada, K1A 0S9

SAE Handbook

Society of Automotive Engineers Inc.,
400 Commonwealth Drive, Warrendale, PA, 15096

Year Book

Tire and Rim Association Inc.,
3200 West Market Street, Akron, Ohio, 44313

Highway Traffic Act

www.e.laws.gov.on.ca
O.Reg.413/05

3. CHASSIS REQUIREMENTS

3.1 **Standard Design** - The vehicle design ***shall***:

(a) **Latest Model** - Be the manufacturer's latest model;

(b) **Industry Acceptability** - Have demonstrated industry acceptability by having been manufactured and sold commercially for at least 5 years;

(c) **Engineering Certification** - Have engineering certification available, upon demand, for this vehicle/equipment from the original manufacturers of major drive train components and major equipment systems and assemblies;

(d) **Regulations** - Conform to all applicable laws, regulations and industry standards governing manufacture, safety, noise levels and pollution in effect in Canada at time of manufacture;

(e) **Published Ratings** - Not have system and component capacities increased above published ratings (i.e. product or component brochures); and

(f) **Standard Components** - Include all components, equipment and accessories normally supplied for the model offered, although they may not be specifically described in this Purchase Description.

3.2 **Operating Conditions** - Vehicles, of specified GVWR/GCWR, ***shall*** operate safely and efficiently in year round conditions, including mud, snow and ice and in the temperature range of -40°C to 37°C (-40°F to 98°F).

3.3 **Vehicle Safety Regulations** - The vehicle ***shall*** meet the provisions of the Canada Motor Vehicle Safety Act in effect upon the date of manufacture of the vehicle. The completed vehicle ***shall*** have Safety Compliance Certification Label with a **National Safety Mark (NSM)**, as a seal of compliance. The contractor ***shall*** submit, upon request, the variant equipment integrator NSM certification number as a proof of registration with Transport Canada as a final stage manufacturer.

3.4 **Performance** - The vehicle ***shall*** have the following minimum performance capabilities:

(a) Top geared road speed, identified as **"VEHICLE TOP SPEED"** in the **CONFIGURATION CAPABILITY TABLE**;

(b) Vehicle gradeability, identified as **"VEHICLE GRADEABILITY"** in the **CONFIGURATION CAPABILITY TABLE**; and

(c) The Contractor ***shall*** provide a computer generated vehicle performance prediction analysis with the Technical Information Questionnaire for each truck configuration, as detailed in the Configuration Capability Tables. Analysis ***shall*** be performed with the power train specified and a fully loaded vehicle. A fully loaded vehicle is a vehicle having a Gross Vehicle Weight Rating identified as "GVWR" in the CONFIGURATION CAPABILITY TABLE.

3.5 **Ratings -** The vehicle ***shall*** have the following minimum ratings:

(a) Weight ratings, identified as **"GVWR", "GAWR FRONT"** and "**GAWR REAR"** in the **CONFIGURATION CAPABILITY TABLE**; and

(b) **"TOWED LOAD"** in the **CONFIGURATION CAPABILITY TABLE**.

3.6 **Dimensions** - The following nominal dimensions ***shall*** be provided:

(a) The tandem axle spacing dimension, identified as **"TANDEM SPACING"** in the **CONFIGURATION CAPABILITY TABLES**.

3.6.1 **Dimensions** – If a lift axle is provided, the contractor ***shall*** provide the axle spacing from front Axle to lift axle, lift axle to first tandem axle, and the tandem axle Spacing as indicated in the Technical Information Questionnaire.

3.7 **Vehicle Requirements**

3.7.1 **Engine** – The engine provided ***shall***:

(a) **Diesel Engine** - Be diesel powered;

(b) **Turbocharged** – Be turbocharged;

(c) **Electronically Controlled** – Be electronically controlled with a speed limiter that can be changed by the dealer; and

(d) **Power** – Have a minimum power rating as indicated in the **CONFIGURATION CAPABILITY TABLES**.

3.7.2 Engine Components - The engine ***shall*** include:

(a) **Air Filter** - A replaceable air filter;

(b) **Cooling System** - A cooling system that includes a thermostatic fan; and

(c) **Engine Compression Brake** - An internal engine compression brake system.

3.7.3 Exhaust System - The vehicle ***shall***(E) be equipped with an exhaust system including a vertical stack that clears the body roof line and fitted with an exhaust elbow.

3.7.4 Fuel Fired Preheat System – The vehicle ***shall*** be equipped with a Fuel Fired Preheat System that ***shall*** preheat the vehicle by heating the engine coolant. The system ***shall***:

(a) **Components** - Consist of all components required for the preheating of engine coolant and insulated cab and include a 7 day timer and control system, and all fittings, hoses and controls required for the efficient operation of the system;

(b) **Operate Independently** - Operate independently or while the engine is operating. Fuel ***shall*** be drawn from the engine fuel tank;

(c) **Fuel Type** - Operate on all diesel formulations suitable for installed engine; and

(d) **Power Requirement** - Operate without requirement for power from outside vehicle.

3.7.5 Fuel Reservoir - The vehicle fuel delivery system ***shall*** include a fuel reservoir system that is mounted on heavy-duty support brackets. The capacity ***shall*** be a minimum of 352 liters (93 US gallons). The tanks ***shall***(E) not interfere with the operation of any equipment installed on the vehicles and ***shall***(E) not disturb the balance of the weight configuration.

3.7.6 Cold Weather Starting Aids - The vehicle ***shall*** be equipped with:

(a) **Block Heater** - A 120-volt AC block heater of a wattage recommended by the engine manufacturer;

(b) **Fuel Filter** - A fuel filter/water separator incorporating a thermostatically controlled heater;

(c) **Oil Pre-Heater** - 120 Volt oil pre-heater;

(d) **Fuel Heater** - A self-regulating in-line fuel heater to warm the fuel before it enters the fuel filter(s) and to maintain the fuel temperatures above the waxing/gelling point during cold weather operation; and

Note: The following fuel heater is provided as guidance – Fuel Pro.

(e) **Winter Bra** – An attachable winter front.

3.7.7 Automatic Transmission (6 Speed) - The vehicle ***shall*** be equipped with a automatic transmission having at least 6 forward speeds.

3.7.8 Power Take-OFF(PTO) – The PTO ***shall***(E) be transmission mounted.

3.7.9 Hydraulic System – A hydraulic system ***shall*** be provided. The hydraulic system ***shall*** have:

(a) Hydraulic hoses that comply with the requirements of SAE J517. Rubber grommets ***shall***(E) be used to protect the hoses where they pass through metal components;

(b) A hydraulic reservoir that is equipped with a fluid level sight gauge. The filler opening ***shall***(E) be the vented type and fitted with a replaceable strainer;

(c) A set of control levers of the pneumatic feathering proportional type to operate the plow (as required). All lines to the valve assembly ***shall***(E) be sufficient to allow an operator wearing gloves to safely activate them;

(d) A bank of hydraulic control valves located outside of the cab to operate plow (as required). All lines to the valve assembly ***shall***(E) be colour coded for ease of maintenance;

(e) An in-circuit hydraulic filter assembly equipped with a filter condition indicator. The filter assembly ***shall*** be positioned so as to allow filter changes without a complete loss of hydraulic fluid from the reservoir; and

(f) A tandem pump - One circuit to operate the spreader conveyor belt and spinner and another circuit to operate the hoist and plow systems. This is only applicable to dump/spreader with plow configuration **(applicable to vehicles equipped with dump spreader and plow combination)**.

3.7.10 Steering - The vehicle ***shall*** be equipped with a power assisted steering system with a telescopic/tilt steering column.

3.7.11 Brakes - The brakes system ***shall***:

(a) **Brake System** - Be a full air actuated service break system and spring actuated parking brake system that comply with Motor Vehicle Safety Regulation (MVSR) 121.1 of the Canadian Motor Vehicle Safety Standard (CMVSS);

(b) **ABS** - Include at least a 4-channel anti-lock (ABS) brake system;

(c) **S-cam** - Be S-cam type air brakes with automatic slack adjusters on all wheels;

(d) **Air Compressor** - Include a minimum 0.42 cubic metre per minute (15 cfm) air compressor;

(e) **Wet Tank** - Include a wet tank reservoir capable of being recharged using a quick disconnect fitting for charging air system;

(f) **Automatic Air Dryer** - Include an automatic air dryer;

(g) **Heated Expello Valve** - Be equipped with heated expello valve on the wet tanks and manual pull type on the dry tanks. The air tank ***shall***(E) be equipped with pull type drain connected with cable and could be reached from outside of the vehicle;

(h) **Dust Shields** - Include brake housing dust shields and visual brake stroke indicators on all wheels; and

(i) **Emergency Brake Chambers** - Include emergency brake chambers on any rear axle(s).

3.7.12 Wheels and Tires - The vehicle ***shall*** be equipped with steel-belted, tubeless radial tires. The tires ***shall*** be mounted on aluminium hub pilot disc wheels that are balanced to preclude wheel shimmy at all vehicle speeds. The tires ***shall*** be highway on the front axle and mud and snow on the rear axles for configurations A, B, D & E. All tires ***shall*** be mud and snow for configuration C.

3.7.13 Suspension - The vehicle ***shall*** be equipped with:

(a) **Front Spring Suspension** – A spring suspension on the front axle;

(b) Rear spring suspension for configuration A and rear rubber block suspension for configurations B to E. The rear axle ***shall***[E] be equipped with a stabilizer bar; and

(c) **Shock Absorbers** - Shock absorbers on all axles. It is acceptable not to equip the rear axle on configuration A and the lift axle, if applicable, with shock absorbers.

3.7.14 Axles - The vehicle ***shall*** be equipped with Manufacturer's Standard I-Beam front axle and single speed tandem rear drive axles. The following axle configuration and equipment ***shall***[E] be provided:

(a) **Front Axle Setback** – Be provided with the manufacturer's standard I-Beam front axle; and

(b) **Differential -** Driver controlled differential locks on rear axle(s).

3.7.14.1 Option 1 - Lift Axle – If a lift axle is required for load distribution purpose, the axle ***shall*** be an air lift self steer. The axle ***shall*** have:

(a) A capacity as detailed in the Configuration Capability Table under "Lift Axle";

(b) Air suspension;

(c) Controls located inside the cab. The controls can only be operated when the 4-way flashers are activated; and

(d) A device that prevents lifting the axle or altering the weight when the truck is travelling at a speed over 60 km per hr.

3.7.15 Frame - The vehicle frame rails ***shall***:

(a) Be constructed of at least 120,000 psi High Strength Steel and a RBM as identified as **"FRAME RBM",** as detailed in the **CONFIGURATION CAPABILITY TABLE**.

3.7.16 Cab – The vehicle ***shall*** be equipped with:

(a) **Conventional Cab** - A conventional cab with rear visibility windows;

(b) **Driver's Seat** – A driver's seat. The driver's seat ***shall*** be a high-back air suspended seat with cloth inserts and retractable 3-point seat belt assembly;

(c) **Passenger's Seat** – A passenger seat. The passenger seat ***shall*** be a high-back air suspended seat with cloth inserts and a retractable 3-point seat belt assembly;

(d) **Rear View Mirrors** - Two aerodynamic, heavy-duty, heated, motorized, rear view mirrors. Each mirror ***shall***[E] include a convex section. Mirror glass ***shall*** be replaceable, adjustable from inside the cab and include a heating element;

Note: The following heavy-duty west coast mirrors dimensions are provided as guidance: 15 by 40 cm (6 by 16 inches). The following convex mirrors dimensions are provided as guidance: 20 cm (8 inches) diameter.

(e) **Sun Visors** - Two rotating and pivoting interior sun visors;

(f) **Dark Upholstery**;

(g) **Coat Hooks**;

(h) **Mats** – Removable waterproof mats for easy cleaning;

(i) **Armrests** – As a minimum molded Armrests on both doors and one armrest per seat;

(j) **Premium Insulation** - Premium insulation in the cab including the floor(s);

(k) **Air Conditioning** - A factory installed, air conditioning system;

(l) **Visibility Equipment** - A visibility window in the front lower portion of the right hand door of the cab **OR** a look-down mirror mounted at the top of the right hand door of the cab;

(m) **Power Windows and locks** - Electrically powered windows and locks in both doors;

(n) **Trim** - Manufacturer's standard interior trim;

(o) **Stereo** - An AM/FM radio with CD player;

(p) **Air Horns** - Air horn(s). If air horns are mounted on the roof, then snow shields ***shall*** be provided;

(q) **Tinted Windshield** - Tinted windshield to reduce solar heating effects; and

(r) **Exterior Sun Visor** - An exterior sun visor.

3.7.17 **Controls and Instruments** - The vehicle ***shall*** be equipped with:

(a) **Windshield Spray** - Electric windshield washer sprayer;

(b) **Windshield Wipers** - Intermittent windshield wipers;

(c) **Cruise Control** - Cruise control system with a fast idle feature;

(d) **Tachometer**;

(e) **Odometer**;

(f) **Coolant Temp** - Coolant temperature gauge with a high coolant temperature indicator;

(g) **Trans Temp** - Transmission temperature gauge with a high transmission temperature indicator;

(h) **Oil pressure** - Oil pressure gauge with a low engine oil pressure indicator;

(i) **Electrical Meter** - Voltmeter or ammeter;

(j) **Air Pressure** - Low air pressure indicator;

(k) **Reverse Warning** - Back up alarm;

(l) **Differential Indicator** – A differential lock engagement indicator; and

(m) **PTO Indicator** – A PTO engagement indicator.

3.7.18 Electrical System - The vehicle ***shall*** be equipped with **LED** lights (note vehicle's definition in paragraph 1.2.1 (f)). The electrical system ***shall*** include:

(a) **Halogen headlights**;

(b) Clearance lights, stop lights, turn signals and tail lights that comply with the Highway Traffic Regulations;

(c) **Circuit Protection** - All circuits protected from overload;

(d) **Electrical Insulation** - Insulating grommets where wiring passes through metal; and

(e) **Beacon Light – Amber** - Amber strobe beacons mounted one on each side of the cab roof or cab shield, as applicable. The light ***shall*** be focused and locked at an angle between 4 and 10 degrees above the horizontal.

3.7.19 Alternator – The vehicle's alternator ***shall*** have an output of at least 200 Amperes.

3.7.20 Batteries – The vehicle ***shall*** be supplied with maintenance free batteries which ***shall*** have a minimum rating of 2500 CCA.

3.7.21 Hoist - The vehicle (for all Items) ***shall*** be equipped with a telescopic hydraulically operated hoist. The hoist ***shall***:

(a) **Lifting Force** - Provide sufficient lifting force on the loaded dump body at the commencement of lift at a hydraulic pressure not exceeding 80 percent of the rated system pressure;

(b) **Tipping Angle** - Have a designed tipping angle of 50 ± 2 degrees;

(c) **Hoist Control** - Have a cab mounted hoist control for raising and lowering the dump body. This control ***shall*** be separated from any other snow plow and spreader controls, as applicable;

(d) **Operation While in Motion** - Be capable of being operated while the truck is in motion;

(e) **Pressure Relief Device** - Be equipped with a pressure relief device to prevent overloading the hydraulic system when the hoist has reached the end of the stroke;

(f) **Hoist Safety** - Include a safety mechanism to prevent the body tipping beyond the design limit;

(g) **Lubrication** - Include lubrication fittings on universal joints, slip joints and steady bearings which require lubrication; and

(h) **Nitrated Rod** – have a nitrate treated hydraulic rod.

3.7.22 Miscellaneous Equipment - The vehicle ***shall*** be equipped with the following:

(a) **License Plate Mounting** - License plate mounting provision, front and rear. The Rear licence plate ***shall***[(E)] be illuminated;

(b) **Mud Flaps** - Front and rear mud flaps. The rear mud flaps ***shall*** be attached to the dump box;

(c) **Tow Hooks** - Tow hooks mounted at the front and at the rear, hooks and mountings of sufficient strength to permit the recovery of the vehicle; and

(d) **Pintle Hook and Trailer Brake Control** - A duplex pintle hook including a trailer brake control. The trailer brake control ***shall***[(E)] be mounted at the operator's station on or near the steering column. The pintle hook ***shall*** have the following features:

(i) The pintle hook ***shall*** withstand a minimum of 4,445 kg (9,800 lbs) vertical load and 20,412 kg (45,000 lbs) Gross Trailer Weight. The safety chain towing shackles ***shall*** have drawbar pull capacity of at least 4,563 kg (10,000 lbs) and installed on both sides of the pintle hook; and

Note: The following pintle hook Make and Model is provided as guidance – Heavy-duty swivel type (Holland – Model PH 760) with model TH-850 trailer safety chain towing shackle.

(ii) In case a plate is required for the pintle hook installation, the plate ***shall*** be fabricated using steel. Stress analysis ***shall*** be conducted to confirm the ability of the plate to withstand the maximum towed load requirement as indicated in the **CONFIGURATION CAPABILITY TABLES.** The analysis result ***shall*** be provided to the Technical Authority on request. A line drawing for the plate design ***shall*** be provided to Technical Authority on

request. The line drawing ***shall*** detail the location of the following components:

1. The licence plate;
2. LED licence plate light and guard;
3. Two shackles;
4. The airline connectors (dummy glad hands secured by chain);
5. Seven-pin trailer connector with ABS
6. Trailer receptacle – **No need to install trailer receptacle for this requirement.**

The following pintle hook plate line drawing is provided as guidance:

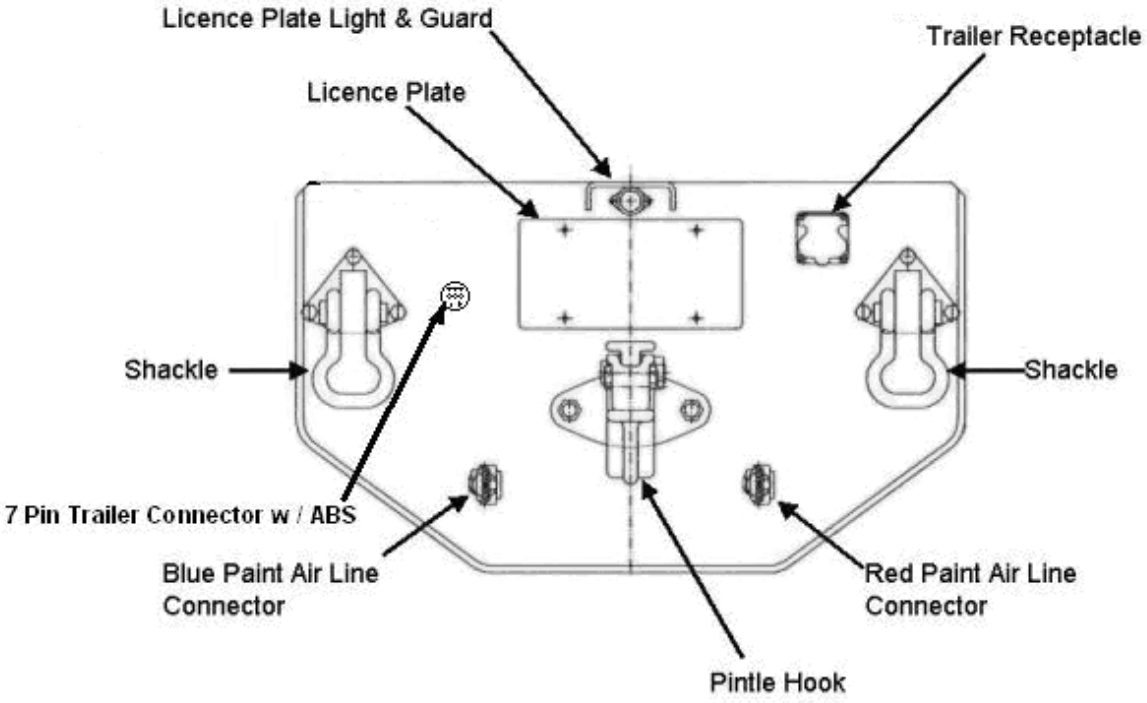

Figure 1 Pintle Hook Plate

3.7.23 Paint - The following paint procedure ***shall***[E] be followed for the vehicle including the cab chassis and variant systems, as applicable:

(a) **Manufacturer's Painting Method** - Paint applied in accordance with the paint manufacturer's recommendations and the manufacturer's best production procedures, rendering a durable finish and a smooth appearance, free from runs, sags and orange peel; and

(b) **Phosphate Treatment** - A phosphate treatment plus primer or an E-coat system on all ferrous metals, followed by a minimum of one coat of paint and a clear coat.

3.7.24 Paint Colour – The vehicle ***shall*** be painted high visibility yellow. The chassis components may be painted the manufacturer's standard colour. Plows ***shall*** be painted the manufacturer's standard colour.

3.7.25 Corrosion Protection – The following ***shall*** be applied to the vehicle:

(a) **Rust Proofing** - Aftermarket rust proofing provided in addition to standard factory rust proofing. The treatment will normally be applied within the first year of service. The treatment date will be directed by the Technical Authority to optimize seasonal rust prevention benefits. If not demanded prior to delivery, a pre-paid certificate authorizing treatment at an aftermarket outlet ***shall*** be provided with the vehicle.

(b) **Rust Preventative** - All metal surfaces treated with a rust preventative oily film product having the following properties;

(i) Moisture displacing;

(ii) Creeping (capillary action);

(iii) Low solvent content;

(iv) Compatibility with rubbers, plastics and all other materials used in automotive construction;

(v) Non toxic;

(vi) Minimal dripping;

(c) **Salt Spray Endurance Test** - Written proof of a twelve hour ASTM B117 salt spray endurance test certification by an independent test laboratory. Krown Rust Kontrol and Rust Check products have been previously certified, proof not required.

(d) **Application Areas** - The application includes, but is not limited to the underside of fenders and hood, enclosed and boxed-in sections, seams, mouldings, crevices, weld points, underbody and exposed exterior brackets;

(e) **Warranty Documentation** - A decal and warranty papers accompanying each vehicle; and

(f) **Availability** – The corrosion protection system ***shall*** be widely available across Canada or available through mobile services.

Note: the following corrosion protection systems are provided as guidance:

Krown Rust Kontrol or Rust Check products.

3.7.26 Corrosion Resistant Materials – The vehicle ***shall***(E):

(a) **Rivets** - Be manufactured with stainless steel, zinc plated or hot dipped galvanized aluminium rivets, and plastic black oxide brass fasteners; and

(b) **Corrosion Protection Design** - Be designed to prevent galvanic corrosion.

3.7.27 Lubricants, Hydraulic Fluids and Fittings - The vehicle ***shall***(E):

(a) Axles, transmission and differentials ***shall*** be furnished with synthetic lubricant. The synthetic lubricant ***shall*** be approved by components manufacturer and furnished by the OEM; and

(b) The vehicle ***shall*** operate satisfactorily on Canadian Forces Supply Line lubricants including synthetic lubricants. This includes 15W40 and SAE 75W90. Vehicle hydraulic systems ***shall***(E) operate using DEXRON III.

3.7.28 Identification - The following information ***shall***(E) be permanently affixed in a conspicuous and protected location:

(a) **Manufacturer Identification** - The manufacturer's name, model number, serial number and model year; and

(b) **Loading Ratings** - The GVWR, GCWR and GAWR ratings (as applicable).

3.7.29 Warning and Instruction Plates - The vehicle ***shall***(E) be equipped with warning and equipment operation instruction plates that are in accordance SAE J115. The Plates ***shall*** be within easy view of the operator, be bilingual (English and French) and/or make use of graphic symbols, as much as possible, as defined in SAE J1362.

4. Equipment Variant Options -

4.1 Option 2 – **Dump Body** (applicable to Item II) - As requested in the **Requirement Summary Table**, the vehicle ***shall*** be equipped with a dump body that has a nominal water level volume of **6.88 m^3** (**9 yd^3**). The body ***shall***:

(a) **Height** - Have a nominal height in the range of 66 to 102 cm (26 to 40 inches), however the height of the side wall above ground level ***shall*** not exceed 2.59 meters (102 inches).

(b) **Width** - Have a nominal width in the range of 213 to 234 cm (84 to 92 inches).

(c) **Panels** - Have front panels and side panels. The panels ***shall***(E) be constructed of 4.5 mm (3/16 inch) Hardox 450. Ribs ***shall***(E) be sloped to prevent accumulation of corrosive material;

(d) **Floor** - Have a floor supported by at least two long members and cross members. The floor ***shall***(E) be constructed of 6.3 mm (1/4-inch) Hardox 450 and;

(e) **Tailgate** - Include a double-acting type tailgate designed for top and bottom opening with a tailgate latch. The tailgate ***shall***[(E)] be constructed of 6.3 mm (1/4-inch) Hardox 450. Combination spreading and drop chains ***shall*** be provided. Tailgate ***shall***[(E)] be air-operated and controlled by a switch mounted in the cab;

(f) **Tire Chain Clearance** - Include clearance for tire chains;

(g) **Cab Shield** - Include a manufacturer's standard half-sized cab shield, braced to prevent buckling;

(h) **Safety Bar** - Include a safety bar (painted a high visibility colour) designed to hold the dump body in the "UP" position during maintenance operations;

(i) **Cover** - Include a fully retractable air or electrically operated cover that is controlled by a switch mounted in the cab;

(j) **Reflectors** - Include reflectors mounted on rear and sides of the dump body;

(k) **Lights** - Include LED sealed clearance lights, LED rear stop lights, LED tail lights, and LED directional lights inset at the rear of the dump body. These lights ***shall*** be wired to work simultaneously with the vehicle lighting system;

(l) **Paint** - Be painted the same colour as the vehicle;

(m) **Welded Body** - Have a continuously welded body;

(n) **Side Ladder** - Have a fold-up ladder on the left front side of the dump box. The ladder steps ***shall*** be manufactured of non-slip material; and

(o) **Apron –** Include an apron at the rear of the dump body to dispel material further away from the vehicle when dumping.

4.2 **Option 3** – **Dump Body** (applicable to Item IV) - As requested in the **Requirement Summary Table**, the vehicle ***shall*** be equipped with a dump body that has a nominal water level volume of **10.7 m^3**(**14 yd^3**). The dumb body ***shall*** have items **4.1(a)** through **4.1(o),** inclusive.

4.3 **Option 4** – **16.82 m^3 (20 yd^3) Dump Body** (applicable to Item V) - As requested in the **Requirement Summary Table**, the vehicle ***shall*** be equipped with **16.82 m^3 (20 yd^3)** dump body. The dump body ***shall*** be 6.25 m (20.5 ft) nominal. The dumb body ***shall*** have items **4.1(a)** through **4.1(o),** inclusive. The vehicle ***shall*** be equipped with a **heavy duty electric vibrator**.

4.4 **Option 5** - **Dump/Spreader** (applicable to Item I) - As requested in the **Requirement Summary Table**, the vehicle ***shall*** be equipped with a dump body that has a nominal water level volume of 3.97 m^3 (**5.2 yd^3**). The dump/spreader ***shall*** be capable of discharging and spreading aggregate (i.e. urea, salt and sand) ahead of the rear wheels during winter operations. The spreader ***shall*** not hinder the ability of dumping material to the rear of the vehicle as a conventional dump body. The dump/spreader ***shall***:

(a) **Dump Properties** – Have items **4.1(a)** through **4.1(o),** inclusive;

(b) **Side-Dumping Shell** - Include an inner side-dumping shell for spreader operation. The grease lines for the hinges ***shall***(E) be routed to the outside of the long members for ease of lubrication;

(c) **Strength** - Have the front, side and tailgate panels constructed of at least 3 mm (10 GA) high tensile steel. Ribs ***shall***(E) be sloped to prevent accumulation of corrosive material;

(d) **Conveyor** - Include a chain driven conveyor for moving the aggregate to the front chute and spinner. The conveyor tension ***shall***(E) be provided by grease activated rams;

(e) **Conveyor Floor** - Have the conveyor floor, conveyor cover and dump body floor constructed of at least 6.3 mm (1/4-inch) high tensile steel and be supported by at least two long members;

(f) **Polymer Lined Chute** - Include a polymer lined chute and poly material spinner mounted on the left front corner of the dump body;

(g) **Spotlight** - Include an LED white spotlight to illuminate the spinner. The spotlight ***shall*** be controlled by a separately identified switch in the cab unless it is illuminated automatically when the spinner is actuated;

(h) **Control System** - Include an electronic spreader control system that is controlled from the cab. The control system ***shall***(E) be a Dickie-John system that encompasses:

(i) A conveyor speed proportioning valve;

(ii) A spinner speed proportioning valve;

(iii) An electronic application rate sensor;

(iv) An electronic vehicle speed sensor;

(v) Digital console controller and alarm; and

(i) **Screen –** Include a screen to break up salt loaded in the dump body.

4.5 **Option 6** - **Dump/Spreader** (applicable to Item III) - As requested in the **Requirement Summary Table**, the vehicle ***shall*** be equipped with a dump body that has a nominal water level volume of **9.17 m^3 (12 yd^3) dump body/spreader**. The dumb body ***shall*** have items **4.4(a)** through **4.4(i),** inclusive.

4.6 **Option 7** - **Drive Frame & Front Hitch** - As requested in the **Requirement Summary Table**, the vehicle shall be equipped with drive frame and front hitch **(applicable to Items I, II & III) -** The drive frame and the front hitch ***shall***:

(a) **Quick Mounting** - Be the quick low mounting type with power tilt capability, with controls inside the cab, for trucks equipped with hoods that swing open towards the front;

(b) **Quick Disconnect Couplings** - Have hydraulic lines equipped with quick disconnect couplings. All couplings ***shall*** have rubber cover caps;

(c) **Reversing Mechanism** - Include a suitably mounted full power hydraulically operated reversing mechanism capable of reversing the plow from right to left during snow clearing mode;

(d) **Power Angle Cylinders** – Include power angle cylinders of suitable diameter and are protected from impact by a cushion valve;

(e) **Power Lift Cylinder** - Include a power lift cylinder of suitable diameter;

(f) **Nitrated Rod** – Include nitrate treated hydraulic rods;

(g) **Oscillating Plate** – Include a reinforced oscillating plate to enable the plow to follow the contours of the road surface;

(h) **Self-Leveling** – Include a self-leveling device capable of keeping the cutting edge of the moldboard parallel to the road surface while in the carrying position;

(i) **Front Support Plates** - Include front support plates of at least 13 mm (1/2 inch) thick steel that are set back as far as possible along the truck chassis frame rails in order to provide optimum support; and

(j) **Headlights** - Include rubber shock mounted rectangular quartz-halogen headlights with integrated directional lights positioned to provide additional lighting during plowing operations and to illuminate the frontal area when the plow is raised.

4.7 **Option 8 - One-Way Snow Plow** – Applicable to item III - As requested in the **Requirement Summary Table**, the vehicle ***shall*** be equipped with a One-Way snow plow. The plow ***shall***:

(a) Be equipped with a high speed continuous curve poly material type moldboard assembly that includes upper horizontal support, lower horizontal support and vertical ribs. The moldboard ***shall*** be adjustable to allow for various cutting edge attack angles and have following nominal dimensions:

(i) Nose height - 81 cm (32 inches);

(ii) Discharge height - 157 cm (62 inches);

(iii) Overall length - 3.35 metres (11 feet);

(iv) Clearing path - 2.7 metres (9 feet); and

(v) Thickness of moldboard material - 9 mm (3/8 inch).

(b) Include a compression type trip mechanism for absorbing road shocks;

(c) Include a multi-section carbide steel cutting blade;

(d) Include at least two moldboard shoes;

(e) Include two height adjustable skid shoe assemblies;

(f) Include high coloured visibility plow marker attached to each end of the plow; and

(g) Be equipped with **Nitrogen Ride Control System** - The system ***shall*** be connected to the plow lift cylinder in order to absorb the shock loads transferred to the truck front axle, suspension and chassis when the plow is in the carry position. The system is requested in order to increase plow truck stability at work and during breaking.

4.8 **Option 9** - **Reversible Plow** – Applicable to items I & II - As requested in the **Requirement Summary Table**, the vehicle ***shall*** be equipped with a 3.3 meter (11-foot) nominal reversible snow plow. The snow plow ***shall***:

(a) Be equipped with a high speed continuous curve poly material type moldboard assembly that includes an upper horizontal support, a lower horizontal support and vertical ribs. The moldboard ***shall***(E) be adjustable to allow for various cutting edge attack angles and ***shall***(E) have the following nominal dimensions:

(i) Overall height - 106 cm (42 inches);

(ii) Overall length - 3.35 meter (11 feet);

(iii) Thickness of moldboard material - 9 mm (3/8 inch);

(b) Include a compression type trip cutting edge assembly with a multi-section carbide steel cutting blade;

(c) Include at least two moldboard shoes;

(d) Be equipped with two height adjustable skid shoe assemblies;

(e) Be equipped with abrasive resistant steel curb (scuff) shoes mounted at each extremity of the blade;

(f) Be equipped with left and right markers; and

(g) Be equipped with **Nitrogen Ride Control System** - The system ***shall*** be connected to the plow lift cylinder in order to absorb the shock loads transferred to the truck front axle, suspension and chassis when the plow is in the carry position. The system is requested to increase plow truck stability at work and during breaking.

4.9 **Option 10** - **Side Wing Plow** – Applicable to items II & III - As requested in the **Requirement Summary Table**, the vehicle ***shall*** be equipped with a side wing plow. The side wing plow ***shall***:

(a) **Moldboard** - Be equipped with a continuous curve poly material type moldboard assembly that includes upper horizontal support, lower horizontal support and vertical ribs;

(b) **Benching Operations** - Be capable of performing limited benching operations at a horizontal height of at least 25 cm (10 inches);

(c) **Dimensions** - Have the following nominal dimensions:

(i) Height at the front end - 76 cm (30 inches);

(ii) Height at discharge end - 96 cm (38 inches);

(iii) Overall length of - 3.35 meters (11 feet);

(iv) Thickness of moldboard material - 9 mm (3/8 inch);

(d) **Carbide Cutting Edge** - Include a carbide cutting edge;

(e) **Front Plow Interference** - Not interfere with the operation of the front plow;

(f) **Dump body Interference –** Not interfere with the operation of the dump body;

(g) **Engine Hood Interference** – Not interfere with the opening of the engine hood or be designed such that one person can easily and safely manipulate the system to allow opening of the hood. A single opening on the driver side such as a hood hatch to provide access to all routine maintenance checks including air filter changes without opening the hood will be acceptable;

(h) **Overlap** - Overlap the cutting path of the plow to ensure that a ridge of snow is not left between the plow and the wing;

(i) **Quick Mounting Posts** - Include front and rear-mounting posts designed for the quick mounting and dismounting of the wing and brace. The front post ***shall*** not interfere with opening of the vehicle hood on trucks equipped with hoods that tilt forward;

(j) **Hydraulic lifting** - Include a power (up and down) hydraulically operated lifting and lowering mechanism;

(k) **Wing Travel Position** – Be designed such that the operator can see out the right side window while the side plow is in the up position;

(l) **Side Plow Angle of Attack** – Have a hydraulically adjustable arm to change the angle between the blade and the vehicle;

(m) **Safety Chain** - Include a safety chain arrangement to secure the nose of the wing in the event of break away;

(n) **Stowed Safety Chain** - Include a safety chain arrangement to secure the wing when in the stowed position;

(o) **Road Shock Protection** - Include a trip mechanism for protection against road shock;

(p) **Quick Disconnect Couplings** - Include hydraulic lines that are equipped with quick disconnect couplings;

(q) **Flood light** – Include a white flood light on the rear side wing post installed on an adjustable bracket. The light ***shall*** be controlled with a switch on the dash;

(r) **Convex mirror** – Include convex mirror mounted on the right fender or right post to view the plow;

(s) **Nitrated Rod** – Have nitrate treated hydraulic rods; and

(t) **Visibility Markers** – Include coloured visibility plow marker attached to each end of the plow.

5. Deliverable Information – The Contractor ***shall*** provide the Deliverable Information in accordance with the terms of the contract.

5.1 Equipment Manuals – Drive train manuals such as engine, transmission and axles/differentials ***shall*** be provided with the chassis manuals (manuals as available from the component manufacturer). The following additional manuals ***shall*** be provided:

(a) **Operator's/Owner's Manuals** – Operator's manuals ***shall*** be furnished in a bilingual format or as 2 manuals in a single binder (one English, one French). **A hard copy of the Operator's manual *shall* be delivered with each vehicle**;

(b) **Parts Manuals** – The Parts Manuals ***shall*** be in English (French translation is desirable);

(c) **Maintenance (Shop Repair) Manuals** - The Maintenance (Shop Repair) Manual ***shall*** be in English (French translation is desirable);

(d) Manuals on CD/DVD-ROM or online will be acceptable. The operator's manual ***shall*** be provided as detailed in paragraph 5.1 (a).

(e) **Variant Equipment Manuals** – Variant equipment are assemblies not produced by the Prime manufacturer that are added to the vehicle, which have their own set of manuals. This ***shall*** include:

(i) Operating Instructions;

(ii) Parts Manual;

(iii) Maintenance Manual (Shop Repair); and

(f) **Sample Manuals** – A set of Sample Manuals, including all of the above manuals. The sample manuals ***shall*** be delivered to the Technical Authority 15 working days before delivery of vehicles. Sample manuals will not be returned. The Technical Authority will provide manual approval or comments within 30 days;

5.2 Data Summary – The Contractor ***shall*** provide a bilingual English/French Data Summary to the Technical Authority for each complete vehicle make/model furnished. The Contractor ***shall*** complete Data Summary by filling in the required data and an electronic picture into a Data Summary template provided by the Technical Authority.

5.3 Photographs – The contractor ***shall*** provide the Technical Authority with two (2) digital pictures for each complete vehicle, one of the left front three-quarter view, and one of the right rear three-quarter view. All pictures ***shall*** be taken with a clear uncluttered background. The picture size ***shall*** be at least 4 Mega pixels.

5.4 Warranty Letter – The contractor ***shall*** provide a copy of the completed bilingual English/French Warranty Letter with each vehicle shipped in the format approved by the Technical Authority. The Contractor ***shall*** send a copy of the completed Warranty Notification Letter to the Technical Authority for each vehicle shipped, at shipment. A copy of the Warranty Letter ***shall*** be forwarded to the Technical Authority in electronic format.

5.5 Line Setting Ticket – The Contractor ***shall*** provide a Line Setting Ticket, or equivalent, describing the components provided on the cab and chassis. One copy of the Line Setting Ticket ***shall*** accompany each completed vehicle to the final delivery point. The Contractor ***shall*** produce a Supplement listing for all Non-Production Line components and systems included in the Contract. The Supplement ***shall*** indicate the name of the component or system and the company (name and address) where it is to be installed on the cab and chassis. One copy of the Line Setting Ticket and one copy of the Supplement ***shall*** be forwarded to the Technical Authority as soon as they are available.

5.6 Familiarization – Familiarization ***shall*** be provided for the complete vehicle. A Contractor representative ***shall*** provide a minimum of three hours of Operator familiarization training to a maximum of eight persons and a minimum of three hours of Maintainer familiarization training to a maximum of eight parsons. A proof of familiarization instruction completion ***shall*** be provided through a Familiarization Instruction Completion From. The Form ***shall*** be completed and signed by an authorized representative. The form ***shall*** accompany the payment invoice. Familiarization instructions ***shall*** be available in both official languages for destinations in the Province of Quebec or as requested by the Technical Authority. The Technical Authority will provide Familiarization Instruction Completion Form template.

6. QUALITY ASSURANCE PROVISIONS

6.1 Quality System Requirements- The Quality System ***shall*** be in compliance with the SACC manual Clause(s) indicated in the Solicitation/Contract. The contractor ***shall*** be responsible for the Quality System. The Quality Assurance Representative (QAR) will assure that the contractor is providing a Quality System.

6.2 **Performance and Verification Testing**- The first vehicle of each Configuration to be delivered ***shall*** be examined and performance tested by the contractor, under real or equivalent load and operating conditions, to ensure item by item conformance to specified requirements. The QAR and/or the Technical Authority may witness this testing and operate the unit sufficiently to assess the handling characteristics. The contractor ***shall*** have a fully equipped vehicle weighed on certified scales, total weight and weight on each axle ***shall*** be furnished.

6.2.1 The remaining vehicles ***shall*** be tested by the contractor with or without load to check general performance and operation.

05 March 13

APPENDIX "1"

TECHNICAL INFORMATION QUESTIONNAIRE

1. SCOPE.

1.1 SCOPE- This Questionnaire covers technical information to be supplied by a contractor. This information is required by the Technical Authority for technical assessment of equipment offered. If a paragraph item does not apply to the Configuration, insert NA in response.

NOTE: IT IS THE CONTRACTORS RESPONSIBILITY TO CLARIFY OUTSTANDING TECHNICAL ISSUES, BY WRITTEN REQUEST, TO THE CONTRACTING OFFICER PRIOR TO BID SUBMISSION.

PURCHASE DESCRIPTION PARAGRAPHS

ITEM I

1.3 CONFIGURATION CAPABILITY TABLE

TABLE 1 – CONFIGURATION A - TRUCK, 4X2, DUAL WHEELS					
	GVWR	GAWR FRONT	GAWR REAR	PAYLOAD	TOWED LOAD
WEIGHT RATINGS KG (LBS)				Item I Note: Configuration A equipped with 3.97 m^3 (5.2 yd^3) dump/spreader & reversible plow	
VEHICLE TOP SPEED					
VEHICLE GRADEABILITY					
FRAME RBM (Pounds-inch)					
ENGINE HP					

3.1 Standard Design

Complies? Yes_____No_____

(a) Chassis Make and Model _____

3.2 Operating Conditions

Complies? Yes_____No_____

3.3 Vehicle Safety Regulations

Complies? Yes_____No_____

NSM certification number_____

3.4 Performance

Complies? Yes_____No_____

(c) Computer Generated vehicle performance prediction included?

Yes_____No_____

3.5 Ratings

Complies? Yes_____No_____

3.6 Dimensions

Complies? Yes_____No_____

3.6.1 Dimensions (Applicable to Vehicles Equipped with Lift Axle) – N/A

3.7.1 Engine

Complies? Yes_____No_____

3.7.2 Engine Components

Complies? Yes_____No_____

3.7.3 Exhaust System

Complies? Yes_____No_____

3.7.4 Fuel Fired Preheat System

Complies? Yes_____No_____

System Make, Model & Capacity _____

3.7.5 Fuel Reservoir

Complies? Yes_____No_____

Fuel Reservoir Capacity _____ litres/or_____ US Gallons

3.7.6 Cold Weather Starting Aids

Complies? Yes_____No_____

(a) Block Heater Make, Model & Capacity _____

(d) Fuel Heater Make & Model _____

3.7.7 Automatic Transmission (6 Speed) - Complies? Yes_____No_____

Make/Model _____

Number of Speeds _____

3.7.8 Power Take-OFF(PTO)

Complies? Yes_____No_____

3.7.9 Hydraulic System

Complies? Yes_____No_____

3.7.10 Steering

Complies? Yes_____No_____

3.7.11 Brakes

Complies? Yes_____No_____

(d) Air Compressor Size_____liter/min (cfm)

(f) Automatic Air Dryer Make/Model _____

3.7.12 Wheels and Tires

Complies? Yes_____No_____

Front wheel Make _____ Size _____ Rated Capacity_____

Rear wheel Make _____ Size _____ Rated Capacity_____

Front Tires Make _____ Size _____ Rated Capacity_____

Tread Pattern_____

Rear Tires Make _____ Size _____ Rated Capacity_____

Tread Pattern _____

3.7.13 Suspension

Complies? Yes_____No_____

Front Make/Model/Type _____

Rating _____ kg/or _____lbs

Rear Make/ Model/Type _____

Rating _____ kg/or _____lbs

3.7.14 Axles

Complies? Yes_____No_____

Front Make/Model/Type _____

Rating _____ kg/or _____lbs

Rear Make/ Model _____

Rating _____ kg/or _____lbs

3.7.14.1 Option 1: Lift Axle – N/A

3.7.15 Frame

Complies? Yes_____No_____

Steel Strength _____ psi

RBM _____in-lbs

3.7.16 Cab

Complies? Yes_____No_____

3.7.17 Controls and Instruments

Complies? Yes_____No_____

3.7.18 Electrical System

Complies? Yes_____No_____

3.7.19 Alternator

Complies? Yes_____No_____

Alternator Output _____Amperes

3.7.20 Batteries

Complies? Yes_____No_____

Batteries – Qty _____ Total CCA _____

3.7.21 Hoist

Complies? Yes_____No_____

(a) Lifting Force _____ _____ _____

3.7.22 Miscellaneous Equipment

Complies? Yes_____No_____

3.7.23 Paint

Complies? Yes_____No_____

3.7.24 Paint Colour

Complies? Yes_____No_____

3.7.25 Corrosion Protection

Complies? Yes_____No_____

3.7.26 Corrosion Resistant Materials

Complies? Yes_____No_____

3.7.27 Lubricants, Hydraulic Fluids and Fittings

Complies? Yes_____No_____

3.7.28 Identification

Complies? Yes_____No_____

3.7.29 Warning and Instruction Plates

Complies? Yes_____No_____

4. Equipment Variant Options

4.1 Option 2: Dump Body 6.88 m^3 (9 yd^3) – N/A

4.2 Option 3: Dump Body 10.7 m^3 (14 yd^3) – N/A

4.3 Option 4: Dump Body 16.8 m^3 (20 yd^3) with Heavy Duty Electric Vibrator – N/A

4.4 Option 5: Dump Body/Spreader – 3.97 m^3 (5.2 yd^3)

Complies? Yes_____No_____

Make, Model & Capacity _____

4.5 Option 6: Dump Body/Spreader – 9.17 m^3 (12 yd^3)- N/A

4.6 Option 7: Drive Frame & Front Hitch

Complies? Yes_____No_____

Hitch Make & Model _____

4.7 Option 8: One Way Snow Plow – N/A

4.8 Option 9: Reversible Plow

Complies? Yes_____No_____

Plow Make & Model _____

4.9 Option 10: Side Wing Plow – N/A

5.1 Equipment Manuals

(a) **Operator's Manual**

Will be provided as requested? Yes___No_____

(b) **Parts Manual**
Will be provided as requested? Yes___No_____

(c) **Maintenance (Shop Repair) Manual**

Will be provided as requested? Yes_____No_____

(e) **Variant Equipment Manuals**

Will be provided as requested? Yes_____No_____

(f) **Sample Manuals**

Will be provided as requested? Yes_____No_____

5.2 **Data Summary**

Will be provided as requested? Yes_____No_____

5.3 **Photographs**

Will be provided as requested? Yes_____No_____

5.4 **Warranty Letter**

Will be provided as requested? Yes_____No_____

5.5 **Line Setting Ticket**(Cab and Chassis)

Will be provided as requested? Yes_____No_____

5.6 **Familiarization**

Will be provided as requested? Yes_____No_____

Item I: WEIGHT DISTRIBUTION ANALYSIS
Configuration A
Equipped with 3.97 m^3 (5.2 yd^3) Dump/Spreader & Reversible Plow

A weight distribution analysis ***shall*** be performed to verify proper axle loading for a fully loaded vehicle considering minimum mandatory requirement for Gross Axle Weight Ratings, Gross Vehicle Weight Rating and payload as requested in paragraph 1.3.

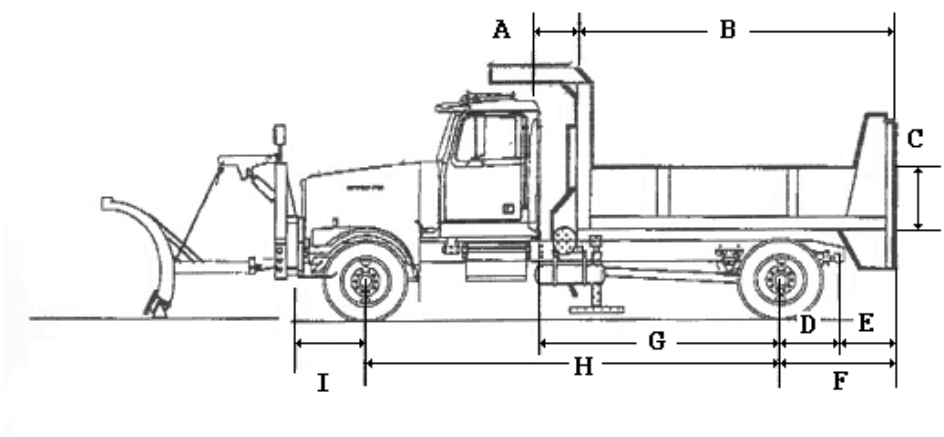

A = Cab to Box
B = Box Exterior Length
C = Box Height
D = Center Wheel to Center Hinge
E = Center Hinge to Box End
F = Center Axle to Box End
G = Cab to Axle
H = Wheelbase
I = Bumper to Front Axle
***** = Box Width

A	_____	in	**F**	_____	in
B	_____	in	**G**	_____	in
C	_____	in	**H**	_____	in
D	_____	in	**I**	_____	in
E	_____	in	*****	_____	in

COMPLETED VEHICLE CURB WEIGHT

Front Axle Curb Weight	_____	lbs
Rear Axle Curb Weight	_____	lbs

COMPLETED FULLY LOADED VEHICLE

Payload	_____	lbs
Percent Payload Transfer to Front Axle	_____	%
Front Gross Axle Weight (GAW)	_____	lbs
Rear Gross Axle Weight (GAW)	_____	lbs

TRUCK RATINGS

Front Gross Axle Weight Rating (GAWR)	_____	lbs
Rear Gross Axle Weight Rating (GAWR)	_____	lbs

Conformance Certificate If the vehicle and equipment offered do not conform exactly to the requirements of this purchase description, any deviation ***shall*** be listed below. If there are no deviations, this fact ***shall*** be stated below.

_____

_____

_____

_____

_____

_____

_____

_____

_____

_____

_____

_____

_____

_____

_____

_____

_____

_____

_____

FIRM NAME_____

ADDRESS_____

NAME _____ TITLE_____

TELEPHONE NUMBER _____ FAX NUMBER_____

SIGNATURE _____ DATE_____

ITEM II

1.3 CONFIGURATION CAPABILITY TABLE

TABLE 2 – CONFIGURATION B - TRUCK, 6x4, DUAL WHEELS					
	GVWR	GAWR FRONT	GAWR REAR	PAYLOAD	TOWED LOAD
WEIGHT RATINGS KG (LBS)				Item II Note: Configuration B equipped with 6.88 cu m (9 yd^3) dump, reversible plow & side wing	
VEHICLE TOP SPEED					
VEHICLE GRADEABILITY					
TANDEM SPACING					
FRAME RBM (Pounds-inch)					
ENGINE HP					

TA

3.1 Standard Design

Complies? Yes_____No_____

(a) Chassis Make and Model _____

3.2 Operating Conditions

Complies? Yes_____No_____

3.3 Vehicle Safety Regulations

Complies? Yes_____No_____

NSM certification number_____

3.4 Performance

Complies? Yes_____No_____

(c) Computer Generated vehicle performance prediction included?

Yes_____No_____

3.5 Ratings

Complies? Yes_____No_____

3.6 Dimensions

Complies? Yes_____No_____

3.6.1 Dimensions (Applicable to Vehicles Equipped with Lift Axle) – N/A

3.7.1 Engine

Complies? Yes_____No_____

3.7.2 Engine Components

Complies? Yes_____No_____

3.7.3 Exhaust System

Complies? Yes_____No_____

3.7.4 Fuel Fired Preheat System

Complies? Yes_____No_____

System Make, Model & Capacity _____

3.7.5 Fuel Reservoir

Complies? Yes_____No_____

Fuel Reservoir Capacity _____ litres/or_____ US Gallons

3.7.6 Cold Weather Starting Aids

Complies? Yes_____No_____

(a) Block Heater Make, Model & Capacity _____

(d) Fuel Heater Make & Model _____

3.7.7 Automatic Transmission (6 Speed) - Complies? Yes_____No_____

Make/Model _____

Number of Speeds _____

3.7.8 Power Take-OFF(PTO)

Complies? Yes_____No_____

3.7.9 Hydraulic System

Complies? Yes_____No_____

3.7.10 Steering

Complies? Yes_____No_____

3.7.11 Brakes

Complies? Yes_____No_____

(d) Air Compressor Size_____liter/min (cfm)

(f) Automatic Air Dryer Make/Model _____

3.7.12 Wheels and Tires

Complies? Yes_____No_____

Front wheel Make _____ Size _____ Rated Capacity_____

Rear wheel Make _____ Size _____ Rated Capacity_____

Front Tires Make _____ Size _____ Rated Capacity_____

Tread Pattern_____

Rear Tires Make _____ Size _____ Rated Capacity_____

Tread Pattern _____

3.7.13 Suspension

Complies? Yes_____No_____

Front Make/Model/Type _____

Rating _____ kg/or _____lbs

Rear Make/ Model/Type _____

Rating _____ kg/or _____lbs

3.7.14 Axles

Complies? Yes_____No_____

Front Make/Model/Type _____

Rating _____ kg/or _____lbs

Rear Make/ Model _____

Rating _____ kg/or _____lbs

3.7.14.1 Option 1: Lift Axle – N/A

3.7.15 Frame

Complies? Yes_____No_____

Steel Strength _____ psi

RBM _____in-lbs

3.7.16 Cab

Complies? Yes_____No_____

3.7.17 Controls and Instruments

Complies? Yes_____No_____

3.7.18 Electrical System

Complies? Yes_____No_____

3.7.19 Alternator

Complies? Yes_____No_____

Alternator Output _____Amperes

3.7.20 Batteries

Complies? Yes_____No_____

Batteries – Qty _____ Total CCA _____

3.7.21 Hoist

Complies? Yes_____No_____

(a) Lifting Force _____ _____ _____

3.7.22 Miscellaneous Equipment

Complies? Yes_____No_____

3.7.23 Paint

Complies? Yes_____No_____

3.7.24 Paint Colour

Complies? Yes_____No_____

3.7.25 Corrosion Protection

Complies? Yes_____No_____

3.7.26 Corrosion Resistant Materials

Complies? Yes_____No_____

3.7.27 Lubricants, Hydraulic Fluids and Fittings

Complies? Yes_____No_____

3.7.28 Identification

Complies? Yes_____No_____

3.7.29 Warning and Instruction Plates

Complies? Yes_____No_____

4. Equipment Variant Options

4.1 <u>Option 2</u>: Dump Body 6.88 m^3 (9 yd^3)

Complies? Yes_____No_____

Make, Model & Capacity _____

4.2 <u>Option 3</u>: Dump Body 10.7 m^3 (14 yd^3) – N/A

4.3 <u>Option 4</u>: Dump Body 16.8 m^3 (20 yd^3) with Heavy Duty Electric Vibrator – N/A

4.4 <u>Option 5</u>: <u>Dump Body/Spreader</u> – 3.97 m^3 (5.2 yd^3) – N/A

4.5 <u>Option 6</u>: <u>Dump Body/Spreader</u> – 9.17 m^3 (12 yd^3) – N/A

4.6 <u>Option 7</u>: <u>Drive Frame & Front Hitch</u>

Complies? Yes_____No_____

Hitch Make & Model _____

4.7 <u>Option 8</u>: <u>One Way snow Plow</u> – N/A

4.8 <u>Option 9</u>: <u>Reversible Plow</u>

Complies? Yes_____No_____

Plow Make & Model _____

4.9 <u>Option 10</u>: <u>Side Wing Plow</u>

Complies? Yes_____No_____

Plow Make & Model _____

5.1 <u>Equipment Manuals</u>

(a) **Operator's Manual**

Will be provided as requested? Yes___No_____

(b) **Parts Manual**
Will be provided as requested? Yes___No_____

(c) **Maintenance (Shop Repair) Manual**

Will be provided as requested? Yes_____No_____

(e) **Variant Equipment Manuals**

Will be provided as requested? Yes_____No_____

(f) **Sample Manuals**

Will be provided as requested? Yes_____No_____

5.2 Data Summary

Will be provided as requested? Yes_____No_____

5.3 Photographs

Will be provided as requested? Yes_____No_____

5.4 Warranty Letter

Will be provided as requested? Yes_____No_____

5.5 Line Setting Ticket(Cab and Chassis)

Will be provided as requested? Yes_____No_____

5.6 Familiarization

Will be provided as requested? Yes_____No_____

Item II: WEIGHT DISTRIBUTION ANALYSIS
Configuration B Equipped with
6.88 cu m (9 yd^3) Dump, Reversible Plow & Side Wing

A weight distribution analysis ***shall*** be performed to verify proper axle loading for a fully loaded vehicle considering minimum mandatory requirement for Gross Axle Weight Ratings, Gross Vehicle Weight Rating and payload as requested in paragraph 1.3.

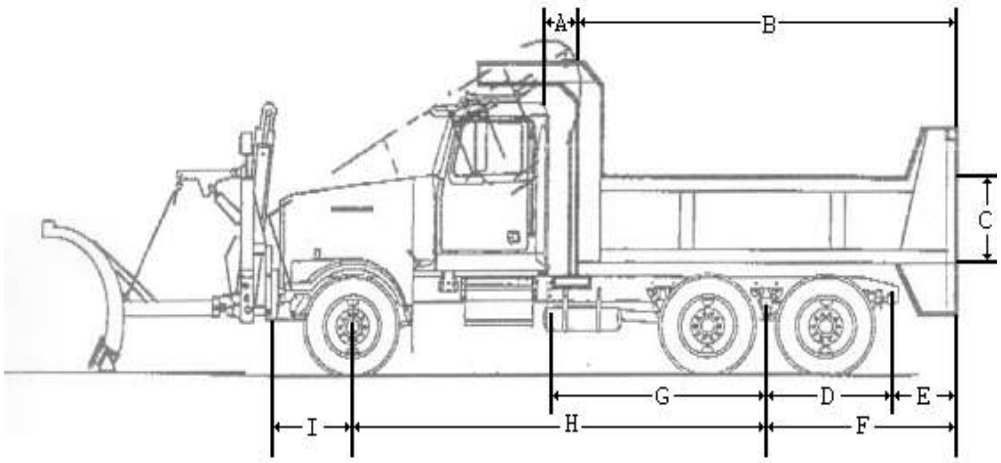

A = Cab to Box
B = Box Exterior Length
C = Box Height
D = Center Wheel to Center Hinge
E = Center Hinge to Box End
F = Center Axle to Box End
G = Cab to Axle
H = Wheelbase
I = Bumper to Front Axle
***** = Box Width

A	_____	in	**F**	_____	in
B	_____	in	**G**	_____	in
C	_____	in	**H**	_____	in
D	_____	in	**I**	_____	in
E	_____	in	*****	_____	in

COMPLETED VEHICLE CURB WEIGHT

Front Axle Curb Weight	_____	lbs
Rear Axle Curb Weight	_____	lbs

COMPLETED FULLY LOADED VEHICLE

Payload	_____	lbs
Percent Payload Transfer to Front Axle	_____	%
Front Gross Axle Weight (GAW)	_____	lbs
Rear Gross Axle Weight (GAW)	_____	lbs

TRUCK RATINGS

Front Gross Axle Weight Rating (GAWR)	_____	lbs
Rear Gross Axle Weight Rating (GAWR)	_____	lbs

Conformance Certificate If the vehicle and equipment offered do not conform exactly to the requirements of this purchase description, any deviation ***shall*** be listed below. If there are no deviations, this fact ***shall*** be stated below.

_____

_____

_____

_____

_____

_____

_____

_____

_____

_____

_____

_____

_____

_____

_____

_____

_____

_____

_____

FIRM NAME_____

ADDRESS_____

NAME _____ TITLE_____

TELEPHONE NUMBER _____ FAX NUMBER_____

SIGNATURE _____ DATE_____

ITEM III

1.3 CONFIGURATION CAPABILITY TABLE

TABLE 3 – CONFIGURATION C - TRUCK, 6X6, DUAL WHEELS						
	GVWR	GAWR FRONT	GAWR REAR	LIFT AXLE	PAYLOAD	TOWED LOAD
WEIGHT RATINGS KG (LBS)				If required for load distribution	Item III Note: Configuration C equipped with 9.17 m^3 (12 yd^3) dump/spreader, one way plow & side wing	
VEHICLE TOP SPEED						
VEHICLE GRADEABILITY						
FRAME RBM (Pounds-inch)						
ENGINE HP						

3.1 Standard Design

Complies? Yes_____No_____

(a) Chassis Make and Model _____

3.2 Operating Conditions

Complies? Yes_____No_____

3.3 Vehicle Safety Regulations

Complies? Yes_____No_____

NSM certification number_____

3.4 Performance

Complies? Yes_____No_____

(c) Computer Generated vehicle performance prediction included?

Yes_____No_____

3.5 Ratings

Complies? Yes_____No_____

3.6 Dimensions

Complies? Yes_____No_____

3.6.1 Dimensions (Applicable to Vehicles Equipped with Lift Axle)

Complies? Yes_____No_____

3.7.1 Engine

Complies? Yes_____No_____

3.7.2 Engine Components

Complies? Yes_____No_____

3.7.3 Exhaust System

3.7.4 Fuel Fired Preheat System

Complies? Yes_____No_____

System Make, Model & Capacity _____

3.7.5 Fuel Reservoir

Complies? Yes_____No_____

Fuel Reservoir Capacity _____ litres/or_____ US Gallons

3.7.6 Cold Weather Starting Aids

Complies? Yes_____No_____

(a) Block Heater Make, Model & Capacity _____

(d) Fuel Heater Make & Model _____

3.7.7 Automatic Transmission (6 Speed) - Complies? Yes_____No_____

Make/Model _____

Number of Speeds _____

3.7.8 Power Take-OFF(PTO)

Complies? Yes_____No_____

3.7.9 Hydraulic System

Complies? Yes_____No_____

3.7.10 Steering

Complies? Yes_____No_____

3.7.11 Brakes

Complies? Yes_____No_____

(d) Air Compressor Size_____liter/min (cfm)

(f) Automatic Air Dryer Make/Model _____

3.7.12 Wheels and Tires

Complies? Yes_____No_____

Front wheel Make _____ Size _____ Rated Capacity_____

Rear wheel Make _____ Size _____ Rated Capacity_____

Front Tires Make _____ Size _____ Rated Capacity_____

Tread Pattern_____

Rear Tires Make _____ Size _____ Rated Capacity_____

Tread Pattern _____

3.7.13 Suspension

Complies? Yes_____No_____

Front Make/Model/Type _____

Rating _____ kg/or _____lbs

Rear Make/ Model/Type _____

Rating _____ kg/or _____lbs

3.7.14 Axles

Complies? Yes_____No_____

Front Make/Model/Type _____

Rating _____ kg/or _____lbs

Rear Make/ Model _____

Rating _____ kg/or _____lbs

3.7.14.1 Option 1: Lift Axle - If required for load distribution

Complies? Yes_____No_____

Rating _____ kg/or _____lbs

Make/ Model _____

Wheel Make _____ Size _____ Rated Capacity_____

Tire Make _____ Size _____ Rated Capacity _____

3.7.15 Frame

Complies? Yes_____No_____

Steel Strength _____ psi

RBM _____in-lbs

3.7.16 Cab

Complies? Yes_____No_____

3.7.17 Controls and Instruments

Complies? Yes_____No_____

3.7.18 Electrical System

Complies? Yes_____No_____

3.7.19 Alternator

Complies? Yes_____No_____

Alternator Output _____Amperes

3.7.20 Batteries

Complies? Yes_____No_____

Batteries – Qty _____ Total CCA _____

3.7.21 Hoist

Complies? Yes_____No_____

(a) Lifting Force _____ _____ _____

3.7.22 Miscellaneous Equipment

Complies? Yes_____No_____

3.7.23 Paint

Complies? Yes_____No_____

3.7.24 Paint Colour

Complies? Yes_____No_____

3.7.25 Corrosion Protection

Complies? Yes_____No_____

3.7.26 Corrosion Resistant Materials

Complies? Yes_____No_____

3.7.27 Lubricants, Hydraulic Fluids and Fittings

Complies? Yes_____No_____

3.7.28 Identification

Complies? Yes_____No_____

3.7.29 Warning and Instruction Plates

Complies? Yes_____No_____

4. Equipment Variant Options

4.1 Option 2: Dump Body 6.88 m^3 (9 yd^3) – N/A

4.2 Option 3: Dump Body 10.7 m^3 (14 yd^3) – N/A

4.3 Option 4: Dump Body 16.8 m^3 (20 yd^3) with Heavy Duty Electric Vibrator – N/A

4.4 Option 5: Dump Body/Spreader – 3.97 m^3 (5.2 yd^3) - N/A

4.5 Option 6: Dump Body/Spreader – 9.17 m^3 (12 yd^3)

Complies? Yes_____No_____

Make, Model & Capacity _____

4.6 Option 7: Drive Frame & Front Hitch

Complies? Yes_____No_____

Hitch Make & Model _____

4.7 Option 8: One Way Snow Plow

Complies? Yes_____No_____

Plow Make & Model _____

4.8 Option 9: Reversible Plow – N/A

4.9 Option 10: Side Wing Plow

Complies? Yes_____No_____

Plow Make & Model _____

5.1 Equipment Manuals

(a) **Operator's Manual**

Will be provided as requested? Yes___No___ ____

(b) **Parts Manual**
Will be provided as requested? Yes___No___ ____

(c) **Maintenance (Shop Repair) Manual**

Will be provided as requested? Yes_____No_____

(e) **Variant Equipment Manuals**

Will be provided as requested? Yes_____No_____

(f) **Sample Manuals**

Will be provided as requested? Yes_____No_____

5.2 **Data Summary**

Will be provided as requested? Yes_____No_____

5.3 **Photographs**

Will be provided as requested? Yes_____No_____

5.4 **Warranty Letter**

Will be provided as requested? Yes_____No_____

5.5 **Line Setting Ticket**(Cab and Chassis)

Will be provided as requested? Yes_____No_____

5.6 **Familiarization**

Will be provided as requested? Yes_____No_____

Item III: WEIGHT DISTRIBUTION ANALYSIS
Configuration C Equipped with
Lift Axle, 9.17 m^3 (12 yd^3) Dump/Spreader, One Way Plow & Side Wing

A weight distribution analysis ***shall*** be performed to verify proper axle loading for a fully loaded vehicle considering minimum mandatory requirement for Gross Axle Weight Ratings, Gross Vehicle Weight Rating and payload as requested in paragraph 1.3.

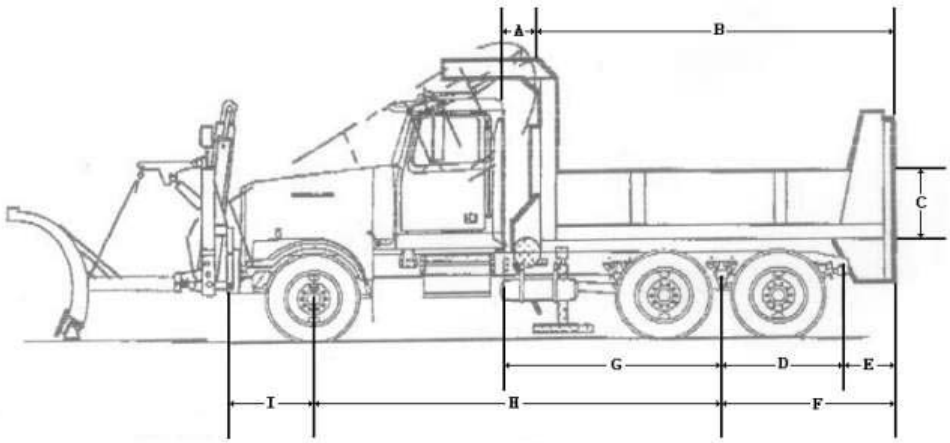

A = Cab to Box
B = Box Exterior Length
C = Box Height
D = Center Wheel to Center Hinge
E = Center Hinge to Box End
F = Center Axle to Box End
G = Cab to Axle
H = Wheelbase
I = Bumper to Front Axle
***** = Box Width

A	_____	in	**F**	_____	in
B	_____	in	**G**	_____	in
C	_____	in	**H**	_____	in
D	_____	in	**I**	_____	in
E	_____	in	*****	_____	in

VEHICLE CURB WEIGHT

Front Gross Axle Weight (GAW)	_____	lbs
Rear Gross Axle Weight (GAW)	_____	lbs

COMPLETED FULLY LOADED VEHICLE

Payload	_____	lbs
Percent Payload Transfer to Front Axle	_____	%
Front Gross Axle Weight (GAW)	_____	lbs
Rear Gross Axle Weight (GAW)	_____	lbs

TRUCK RATINGS

Front Gross Axle Weight Rating (GAWR)	_____	lbs
Rear Gross Axle Weight Rating (GAWR)	_____	lbs

WEIGHT DISTRIBUTION ANALYSIS (IF A LIFT AXLE IS INSTALLED)

A weight distribution analysis ***shall*** be performed to verify proper axle loading for a fully loaded vehicle considering minimum mandatory requirement for Gross Axle Weight Ratings, Gross Vehicle Weight Rating and payload as requested in paragraph 1.3.

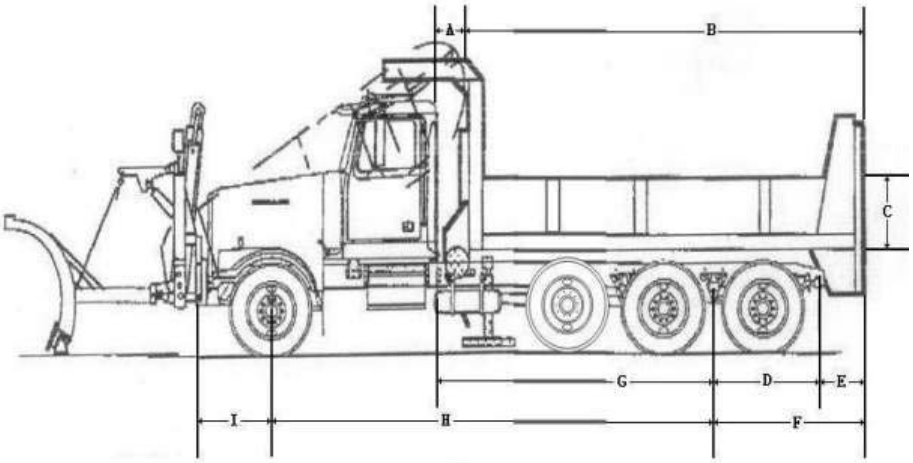

A = Cab to Box
B = Box Exterior Length
C = Box Height
D = Center Wheel to Center Hinge
E = Center Hinge to Box End
F = Center Axle to Box End
G = Cab to Axle
H = Wheelbase
I = Bumper to Front Axle
***** = Box Width

A	_____	in	**F**	_____	in
B	_____	in	**G**	_____	in
C	_____	in	**H**	_____	in
D	_____	in	**I**	_____	in
E	_____	in	*****	_____	in

COMPLETED VEHICLE CURB WEIGHT

Front Axle Curb Weight	_____	lbs
Rear Axle Curb Weight	_____	lbs

COMPLETED FULLY LOADED VEHICLE

Payload	_____	lbs
Percent Payload Transfer to Front Axle	_____	%
Front Gross Axle Weight (GAW)	_____	lbs
Rear Gross Axle Weight (GAW)	_____	lbs

TRUCK RATINGS

Front Gross Axle Weight Rating (GAWR)	_____	lbs
Rear Gross Axle Weight Rating (GAWR)	_____	lbs

Axle Spacing (IF A LIFT AXLE IS INSTALLED)

A weight distribution analysis ***shall*** be performed to verify proper axle loading.

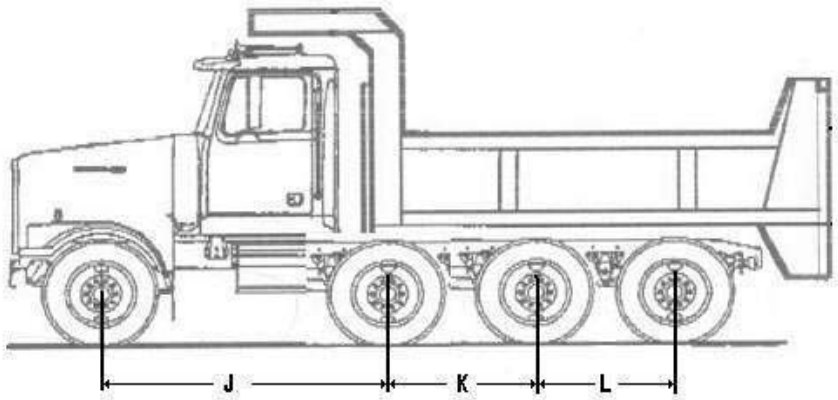

J = Front Axle to Lift Axle

K = Lift Axle to First Tandem Axle

L = Tandem Spacing

J _____ cm (in)

K _____ cm (in)

L _____ cm (in)

Conformance Certificate If the vehicle and equipment offered do not conform exactly to the requirements of this purchase description, any deviation ***shall*** be listed below. If there are no deviations, this fact ***shall*** be stated below.

_____

_____

_____

_____

_____

_____

_____

_____

_____

_____

_____

_____

_____

_____

_____

_____

_____

_____

_____

FIRM NAME_____

ADDRESS_____

NAME _____ TITLE_____

TELEPHONE NUMBER _____ FAX NUMBER_____

SIGNATURE _____ DATE_____

ITEM IV

1.3 CONFIGURATION CAPABILITY TABLE

TABLE 4 – CONFIGURATION D – TRUCK, 6x4, DUAL WHEELS						
	GVWR	GAWR FRONT	GAWR REAR	LIFT AXLE	PAYLOAD	TOWED LOAD
WEIGHT RATINGS KG (LBS)				If required for load distribution	Item IV Note: Configuration D equipped with 10.7 m^3 (14 yd^3) dump	
VEHICLE TOP SPEED						
VEHICLE GRADEABILITY						
FRAME RBM (Pounds-inch)						
ENGINE HP						

3.1 Standard Design

Complies? Yes_____No_____

(a) Chassis Make and Model _____

3.2 Operating Conditions

Complies? Yes_____No_____

3.3 Vehicle Safety Regulations

Complies? Yes_____No_____

NSM certification number_____

3.4 Performance

Complies? Yes_____No_____

(c) Computer Generated vehicle performance prediction included?

Yes_____No_____

3.5 Ratings

Complies? Yes_____No_____

3.6 Dimensions

Complies? Yes_____No_____

3.6.1 Dimensions (Applicable to Vehicles Equipped with Lift Axle)

Complies? Yes_____No_____

3.7.1 Engine

Complies? Yes_____No_____

3.7.2 Engine Components

Complies? Yes_____No_____

3.7.3 Exhaust System

Complies? Yes_____No_____

3.7.4 Fuel Fired Preheat System

Complies? Yes_____No_____

System Make, Model & Capacity _____

3.7.5 Fuel Reservoir

Complies? Yes_____No_____

Fuel Reservoir Capacity _____ litres/or_____ US Gallons

3.7.6 Cold Weather Starting Aids

Complies? Yes_____No_____

(a) Block Heater Make, Model & Capacity _____

(d) Fuel Heater Make & Model _____

3.7.7 Automatic Transmission (6 Speed) - Complies? Yes_____No_____

Make/Model _____

Number of Speeds _____

3.7.8 Power Take-OFF(PTO)

Complies? Yes_____No_____

3.7.9 Hydraulic System

Complies? Yes_____No_____

3.7.10 Steering

Complies? Yes_____No_____

3.7.11 Brakes

Complies? Yes_____No_____

(d) Air Compressor Size_____liter/min (cfm)

(f) Automatic Air Dryer Make/Model _____

3.7.12 Wheels and Tires

Complies? Yes_____No_____

Front wheel Make _____ Size _____ Rated Capacity_____

Rear wheel Make _____ Size _____ Rated Capacity_____

Front Tires Make _____ Size _____ Rated Capacity_____

Tread Pattern_____

Rear Tires Make _____ Size _____ Rated Capacity_____

Tread Pattern _____

3.7.13 Suspension

Complies? Yes_____No_____

Front Make/Model/Type _____

Rating _____ kg/or _____lbs

Rear Make/ Model/Type _____

Rating _____ kg/or _____lbs

3.7.14 Axles

Complies? Yes_____No_____

Front Make/Model/Type _____

Rating _____ kg/or _____lbs

Rear Make/ Model _____

Rating _____ kg/or _____lbs

3.7.14.1 Option 1: Lift Axle – If required for load distribution

Complies? Yes_____No_____

Rating _____ kg/or _____lbs

Make/ Model _____

Wheel Make _____ Size _____ Rated Capacity_____

Tire Make _____ Size _____ Rated Capacity _____

3.7.15 Frame

Complies? Yes_____No_____

Steel Strength _____ psi

RBM _____in-lbs

3.7.16 Cab

Complies? Yes_____No_____

3.7.17 Controls and Instruments

Complies? Yes_____No_____

3.7.18 Electrical System

Complies? Yes_____No_____

3.7.19 Alternator

Complies? Yes_____No_____

Alternator Output _____Amperes

3.7.20 Batteries

Complies? Yes_____No_____

Batteries – Qty _____ Total CCA _____

3.7.21 Hoist

Complies? Yes_____No_____

(a) Lifting Force _____ _____ _____

3.7.22 Miscellaneous Equipment

Complies? Yes_____No_____

3.7.23 Paint

Complies? Yes_____No_____

3.7.24 Paint Colour

Complies? Yes_____No_____

3.7.25 Corrosion Protection

Complies? Yes_____No_____

3.7.26 Corrosion Resistant Materials

Complies? Yes_____No_____

3.7.27 Lubricants, Hydraulic Fluids and Fittings

Complies? Yes_____No_____

3.7.28 Identification

Complies? Yes_____No_____

3.7.29 Warning and Instruction Plates

Complies? Yes_____No_____

4. Equipment Variant Options

4.1 Option 2: Dump Body 6.88 m^3 (9 yd^3) – N/A

4.2 Option 3: Dump Body 10.7 m^3 (14 yd^3)

Complies? Yes_____No_____

Make, Model & Capacity _____

4.3 Option 4: Dump Body 16.8 m^3 (20 yd^3) with Heavy Duty Electric Vibrator – N/A

4.4 Option 5: Dump Body/Spreader – 3.97 m^3 (5.2 yd^3) – N/A

4.5 Option 6: Dump Body/Spreader – 9.17 m^3 (12 yd^3) – N/A

4.6 Option 7: Drive Frame & Front Hitch – N/A

4.7 Option 8: One Way Snow Plow – N/A

4.8 Option 9: Reversible Plow – N/A

4.9 Option 10: Side Wing Plow – N/A

5.1 Equipment Manuals

(a) **Operator's Manual**

Will be provided as requested? Yes___No_____

(b) **Parts Manual**
Will be provided as requested? Yes___No_____

(c) **Maintenance (Shop Repair) Manual**

Will be provided as requested? Yes_____No_____

(e) **Variant Equipment Manuals**

Will be provided as requested? Yes_____No_____

(f) **Sample Manuals**

Will be provided as requested? Yes_____No_____

5.2 Data Summary

Will be provided as requested? Yes_____No_____

5.3 Photographs

Will be provided as requested? Yes_____No_____

5.4 Warranty Letter

Will be provided as requested? Yes_____No_____

5.5 Line Setting Ticket(Cab and Chassis)

Will be provided as requested? Yes_____No_____

5.6 Familiarization

Will be provided as requested? Yes_____No_____

Item IV: WEIGHT DISTRIBUTION ANALYSIS
Configuration D Equipped with 10.7 m^3 (14 yd^3) Dump Body

A weight distribution analysis ***shall*** be performed to verify proper axle loading for a fully loaded vehicle considering minimum mandatory requirement for Gross Axle Weight Ratings, Gross Vehicle Weight Rating and payload as requested in paragraph 1.3.

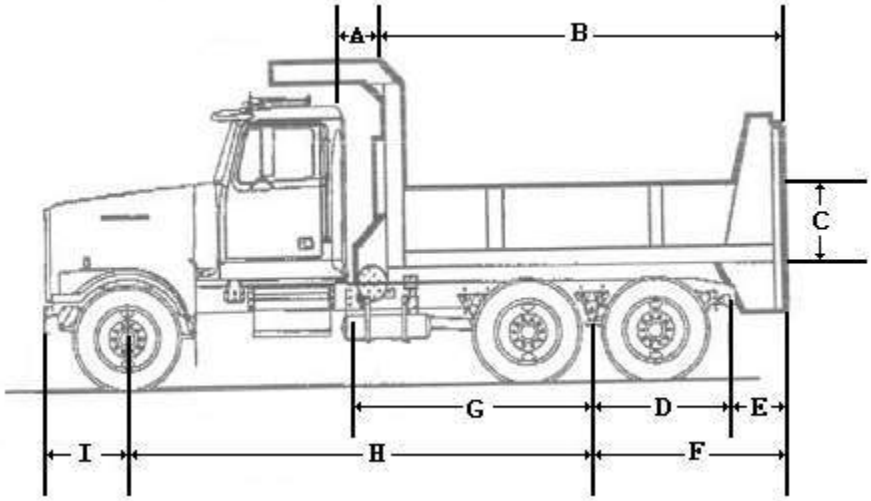

A = Cab to Box
B = Box Exterior Length
C = Box Height
D = CenterWheel to Center Hinge
E = Center Hinge to Box End
F = Center Axle to Box End
G = Cab to Axle
H = Wheelbase
I = Bumper to Front Axle
***** = Box Width

A	_____	in	**F**	_____	in
B	_____	in	**G**	_____	in
C	_____	in	**H**	_____	in
D	_____	in	**I**	_____	in
E	_____	in	*****	_____	in

VEHICLE CURB WEIGHT

Front Gross Axle Weight (GAW)	_____	lbs
Rear Gross Axle Weight (GAW)	_____	lbs

COMPLETED FULLY LOADED VEHICLE

Payload	_____	lbs
Percent Payload Transfer to Front Axle	_____	%
Front Gross Axle Weight (GAW)	_____	lbs
Rear Gross Axle Weight (GAW)	_____	lbs

TRUCK RATINGS

Front Gross Axle Weight Rating (GAWR)	_____	lbs
Rear Gross Axle Weight Rating (GAWR)	_____	lbs

WEIGHT DISTRIBUTION ANALYSIS (IF A LIFT AXLE IS INSTALLED)

A weight distribution analysis ***shall*** be performed to verify proper axle loading for a fully loaded vehicle considering minimum mandatory requirement for Gross Axle Weight Ratings, Gross Vehicle Weight Rating and payload as requested in paragraph 1.3.

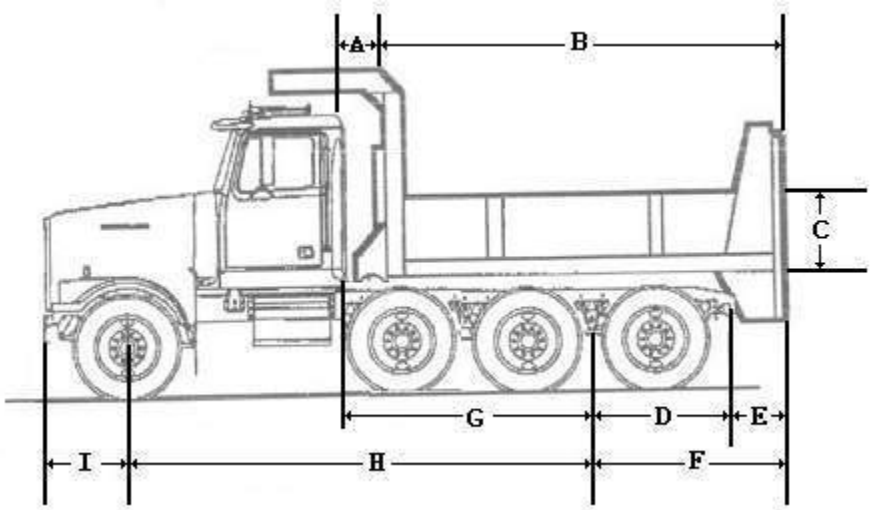

A = Cab to Box
B = Box Exterior Length
C = Box Height
D = Center Wheel to Center Hinge
E = Center Hinge to Box End
F = Center Axle to Box End
G = Cab to Axle
H = Wheelbase
I = Bumper to Front Axle
***** = Box Width

A	_____	in	**F**	_____	in
B	_____	in	**G**	_____	in
C	_____	in	**H**	_____	in
D	_____	in	**I**	_____	in
E	_____	in	*****	_____	in

COMPLETED VEHICLE CURB WEIGHT

Front Axle Curb Weight	_____	lbs
Rear Axle Curb Weight	_____	lbs

COMPLETED FULLY LOADED VEHICLE

Payload	_____	lbs
Percent Payload Transfer to Front Axle	_____	%
Front Gross Axle Weight (GAW)	_____	lbs
Rear Gross Axle Weight (GAW)	_____	lbs

TRUCK RATINGS

Front Gross Axle Weight Rating (GAWR)	_____	lbs
Rear Gross Axle Weight Rating (GAWR)	_____	lbs

Axle Spacing

A weight distribution analysis ***shall*** be performed to verify proper axle loading.

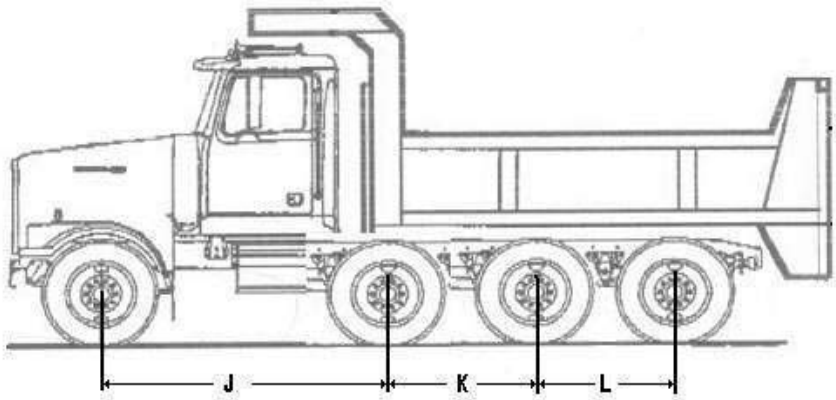

J = Front Axle to Lift Axle

K = Lift Axle to First Tandem Axle

L = Tandem Spacing

J _____ cm (in)

K _____ cm (in)

L _____ cm (in)

Conformance Certificate If the vehicle and equipment offered do not conform exactly to the requirements of this purchase description, any deviation ***shall*** be listed below. If there are no deviations, this fact ***shall*** be stated below.

_____

_____

_____

_____

_____

_____

_____

_____

_____

_____

_____

_____

_____

_____

_____

_____

_____

_____

_____

FIRM NAME_____

ADDRESS_____

NAME _____ TITLE_____

TELEPHONE NUMBER _____ FAX NUMBER_____

SIGNATURE _____ DATE_____

ITEM V

1.3 CONFIGURATION CAPABILITY TABLE

TABLE 5 - CONFIGURATION E – TRUCK, 6x4, DUAL WHEELS						
	GVWR	GAWR FRONT	GAWR REAR	LIFT AXLE	PAYLOAD	TOWED LOAD
WEIGHT RATINGS KG (LBS)					Note: Configuration E equipped with 16.82 m^3 (20 yd^3) complete with heavy duty electric vibrator	
VEHICLE TOP SPEED						
VEHICLE GRADEABILITY						
FRAME RBM (Pounds-inch)						
ENGINE HP						

3.1 Standard Design

Complies? Yes_____No_____

(a) Chassis Make and Model _____

3.2 Operating Conditions

Complies? Yes_____No_____

3.3 Vehicle Safety Regulations

Complies? Yes_____No_____

NSM certification number_____

3.4 Performance

Complies? Yes_____No_____

(c) Computer Generated vehicle performance prediction included?

Yes_____No_____

3.5 Ratings

Complies? Yes_____No_____

3.6 Dimensions

Complies? Yes_____No_____

3.6.1 Dimensions (Applicable to Vehicles Equipped with Lift Axle)

Complies? Yes_____No_____

3.7.1 Engine

Complies? Yes_____No_____

3.7.2 Engine Components

Complies? Yes_____No_____

3.7.3 Exhaust System

3.7.4 Fuel Fired Preheat System

Complies? Yes_____No_____

System Make, Model & Capacity _____

3.7.5 Fuel Reservoir

Complies? Yes_____No_____

Fuel Reservoir Capacity _____ litres/or_____ US Gallons

3.7.6 Cold Weather Starting Aids

Complies? Yes_____No_____

(a) Block Heater Make, Model & Capacity _____

(d) Fuel Heater Make & Model _____

3.7.7 Automatic Transmission (6 Speed) - Complies? Yes_____No_____

Make/Model _____

Number of Speeds _____

3.7.8 Power Take-OFF(PTO)

Complies? Yes_____No_____

3.7.9 Hydraulic System

Complies? Yes_____No_____

3.7.10 Steering

Complies? Yes_____No_____

3.7.11 Brakes

Complies? Yes_____No_____

(d) Air Compressor Size_____liter/min (cfm)

(f) Automatic Air Dryer Make/Model _____

3.7.12 Wheels and Tires

Complies? Yes_____No_____

Front wheel Make _____ Size _____ Rated Capacity_____

Rear wheel Make _____ Size _____ Rated Capacity_____

Front Tires Make _____ Size _____ Rated Capacity_____

Tread Pattern_____

Rear Tires Make _____ Size _____ Rated Capacity_____

Tread Pattern _____

3.7.13 Suspension

Complies? Yes_____No_____

Front Make/Model/Type _____

Rating _____ kg/or _____lbs

Rear Make/ Model/Type _____

Rating _____ kg/or _____lbs

3.7.14 Axles

Complies? Yes_____No_____

Front Make/Model/Type _____

Rating _____ kg/or _____lbs

Rear Make/ Model _____

Rating _____ kg/or _____lbs

3.7.14.1 Option 1: Lift Axle – If required for load distribution

Complies? Yes_____No_____

Rating _____ kg/or _____lbs

Make/ Model _____

Wheel Make _____ Size _____ Rated Capacity_____

Tire Make _____ Size _____ Rated Capacity _____

3.7.15 Frame

Complies? Yes_____No_____

Steel Strength _____ psi

RBM _____in-lbs

3.7.16 Cab

Complies? Yes_____No_____

3.7.17 Controls and Instruments

Complies? Yes_____No_____

3.7.18 Electrical System

Complies? Yes_____No_____

3.7.19 Alternator

Complies? Yes_____No_____

Alternator Output _____Amperes

3.7.20 Batteries

Complies? Yes_____No_____

Batteries – Qty _____ Total CCA _____

3.7.21 Hoist

Complies? Yes_____No_____

(a) Lifting Force _____ _____ _____

3.7.22 Miscellaneous Equipment

Complies? Yes_____No_____

3.7.23 Paint

Complies? Yes_____No_____

3.7.24 Paint Colour

Complies? Yes_____No_____

3.7.25 Corrosion Protection

Complies? Yes_____No_____

3.7.26 Corrosion Resistant Materials

Complies? Yes_____No_____

3.7.27 Lubricants, Hydraulic Fluids and Fittings

Complies? Yes_____No_____

3.7.28 Identification

Complies? Yes_____No_____

3.7.29 Warning and Instruction Plates

Complies? Yes_____No_____

4. Equipment Variant Options

4.1 Option 2: Dump Body 6.88 m^3 (9 yd^3) – N/A

4.2 Option 3: Dump Body 10.7 m^3 (14 yd^3) – N/A

4.3 Option 4: Dump Body 16.8 m^3 (20 yd^3) with Heavy Duty Electric Vibrator

Complies? Yes_____No_____

Dump Body Make, Model & capacity _____

Electric Vibrator Make & Model _____

4.4 Option 5: Dump Body/Spreader – N/A

4.5 Option 6: Dump Body/Spreader – 9.17 m^3 (12 yd^3) – N/A

4.6 Option 7: Drive Frame & Front Hitch – N/A

4.7 Option 8: One Way Snow Plow – N/A

4.8 Option 9: Reversible Plow – N/A

4.9 Option 10: Side Wing Plow – N/A

5.1 Equipment Manuals

(a) **Operator's Manual**

Will be provided as requested? Yes___No_____

(b) **Parts Manual**
Will be provided as requested? Yes___No_____

(c) **Maintenance (Shop Repair) Manual**

Will be provided as requested? Yes_____No_____

(e) **Variant Equipment Manuals**

Will be provided as requested? Yes_____No_____

(f) **Sample Manuals**

Will be provided as requested? Yes_____No_____

5.2 Data Summary

Will be provided as requested? Yes_____No_____

5.3 Photographs

Will be provided as requested? Yes_____No_____

5.4 Warranty Letter

Will be provided as requested? Yes_____No_____

5.5 Line Setting Ticket(Cab and Chassis)

Will be provided as requested? Yes_____No_____

5.6 Familiarization

Will be provided as requested? Yes_____No_____

Item V: WEIGHT DISTRIBUTION ANALYSIS
Configuration E Equipped with Lift Axle &
16.82 m^3 (20 yd^3)Dump and electric vibrator

A weight distribution analysis ***shall*** be performed to verify proper axle loading for a fully loaded vehicle considering minimum mandatory requirement for Gross Axle Weight Ratings, Gross Vehicle Weight Rating and payload as requested in paragraph 1.3.

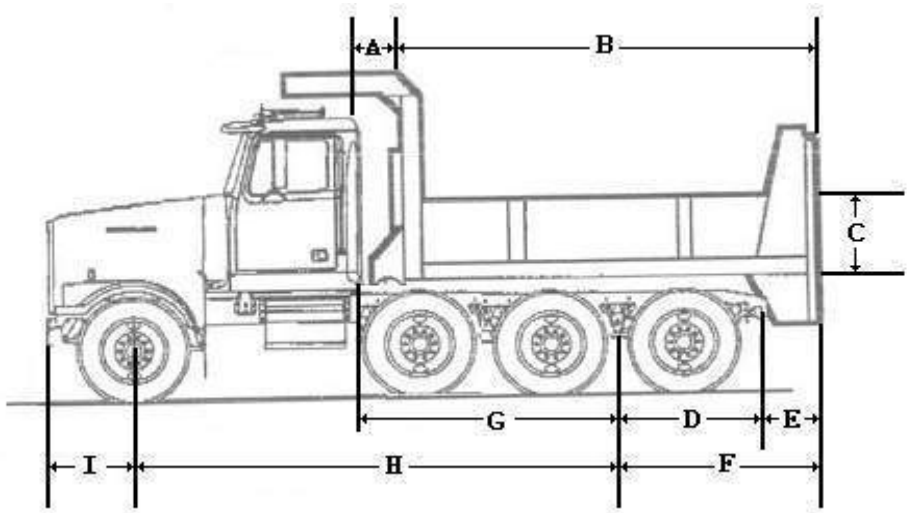

A = Cab to Box
B = Box Exterior Length
C = Box Height
D = Center Wheel to Center Hinge
E = Center Hinge to Box End
F = Center Axle to Box End
G = Cab to Axle
H = Wheelbase
I = Bumper to Front Axle
***** = Box Width

A	_____	in	**F**	_____	in
B	_____	in	**G**	_____	in
C	_____	in	**H**	_____	in
D	_____	in	**I**	_____	in
E	_____	in	*****	_____	in

COMPLETED VEHICLE CURB WEIGHT

Front Axle Curb Weight	_____	lbs
Rear Axle Curb Weight	_____	lbs

COMPLETED FULLY LOADED VEHICLE

Payload	_____	lbs
Percent Payload Transfer to Front Axle	_____	%
Front Gross Axle Weight (GAW)	_____	lbs
Rear Gross Axle Weight (GAW)	_____	lbs

TRUCK RATINGS

Front Gross Axle Weight Rating (GAWR)	_____	lbs
Rear Gross Axle Weight Rating (GAWR)	_____	lbs

Axle Spacing

A weight distribution analysis ***shall*** be performed to verify proper axle loading.

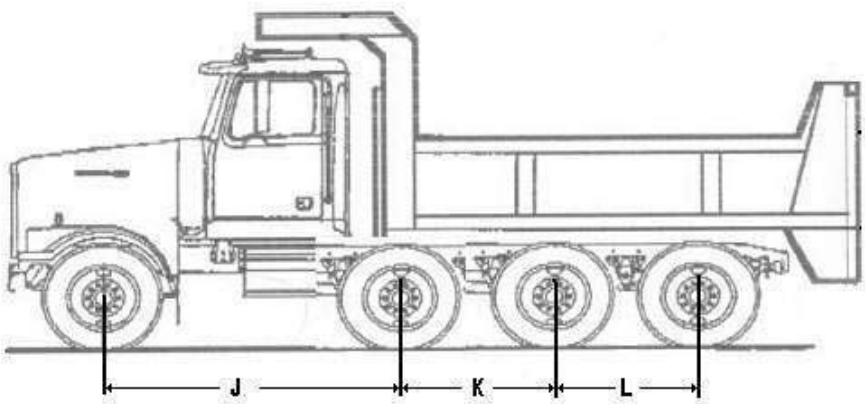

J = Front Axle to Lift Axle

K = Lift Axle to First Tandem Axle

L = Tandem Spacing

J _____ cm (in)

K _____ cm (in)

L _____ cm (in)

Conformance Certificate If the vehicle and equipment offered do not conform exactly to the requirements of this purchase description, any deviation ***shall*** be listed below. If there are no deviations, this fact ***shall*** be stated below.

_____

_____

_____

_____

_____

_____

_____

_____

_____

_____

_____

_____

_____

_____

_____

_____

_____

_____

_____

FIRM NAME_____

ADDRESS_____

NAME _____ TITLE_____

TELEPHONE NUMBER _____ FAX NUMBER_____

SIGNATURE _____ DATE_____