REPORT ANY ERRORS OR OMISSIONS TO DRAFTING OFFICE

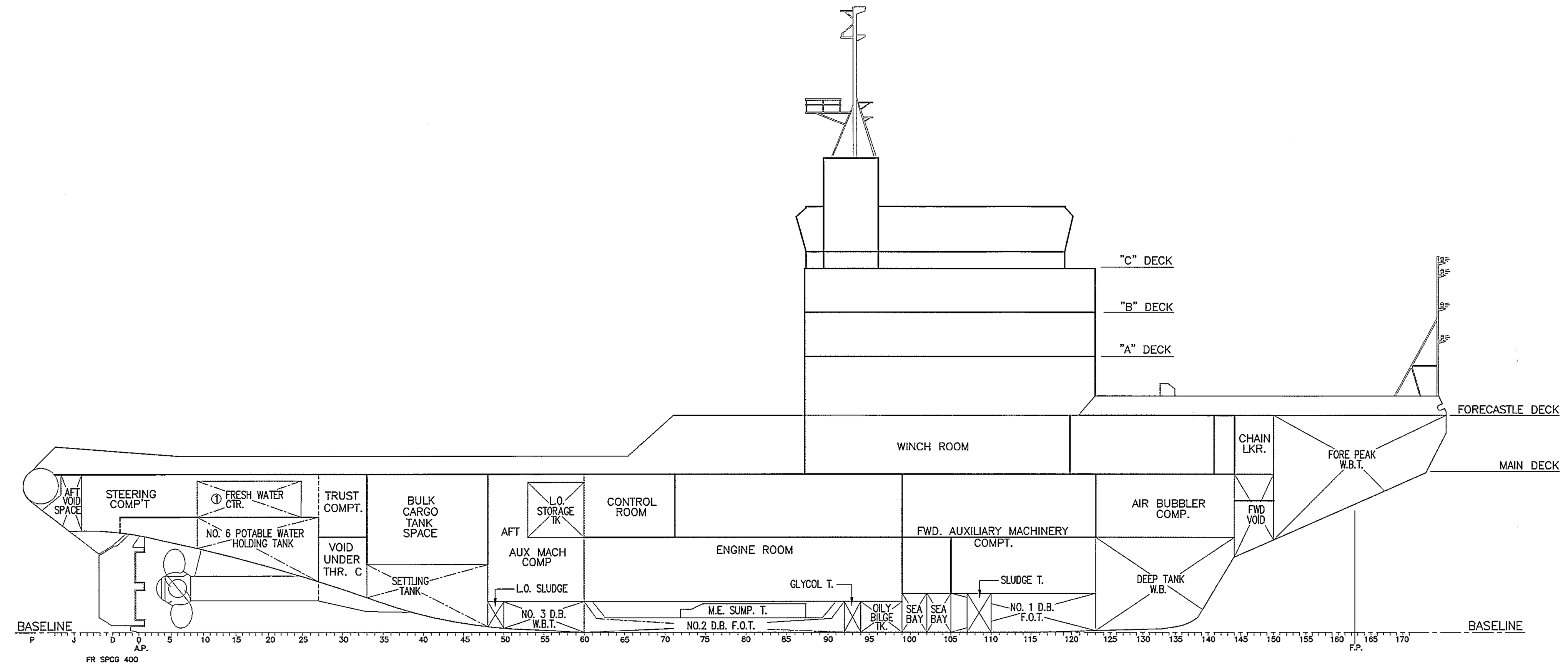

PROFILE

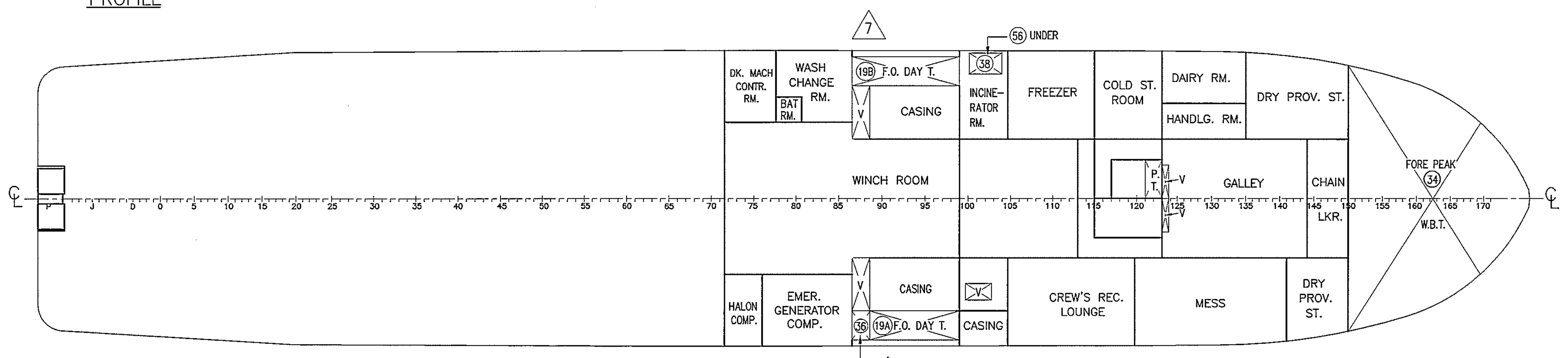

MAIN DECK

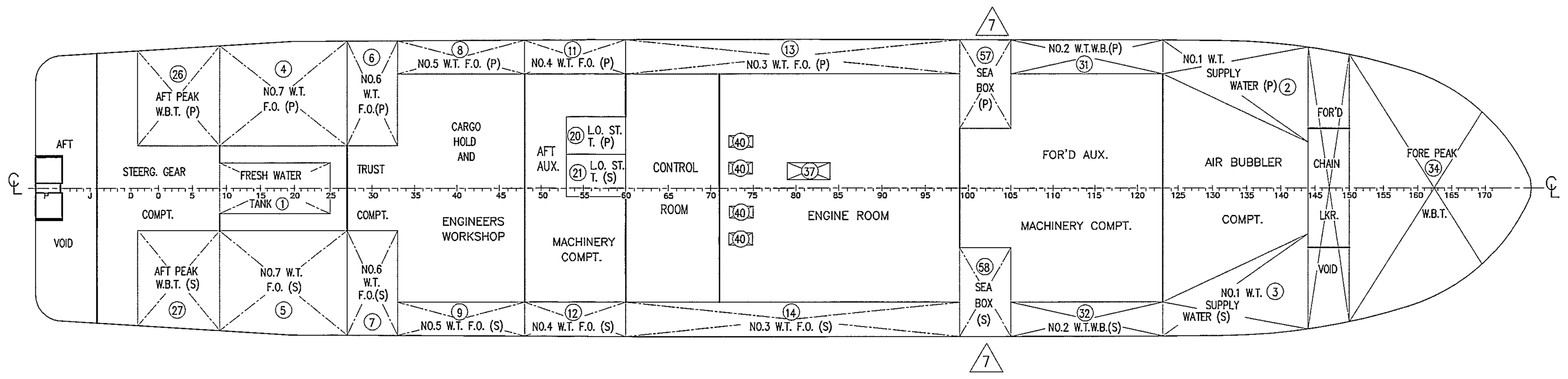

BELOW MAIN DECK

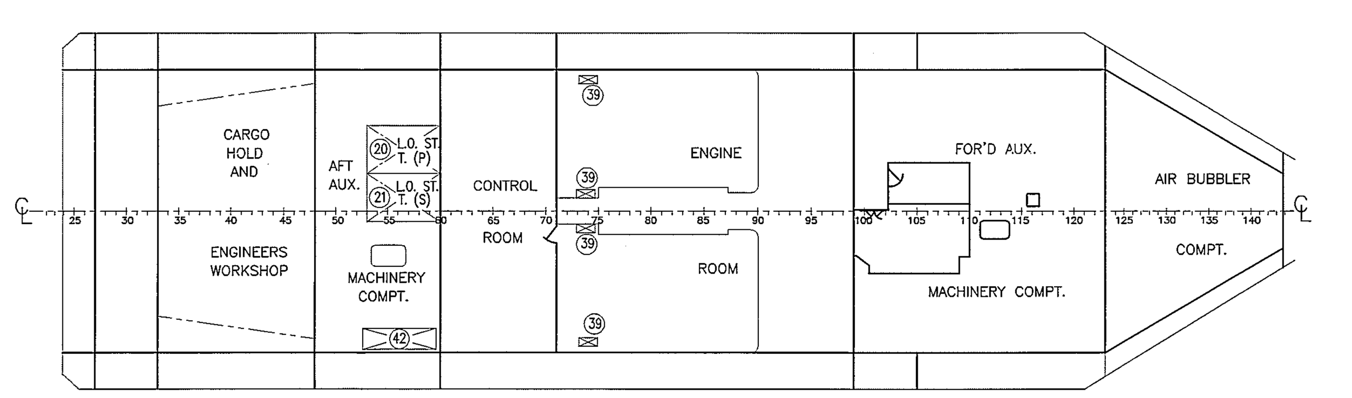

MACHINERY FLAT

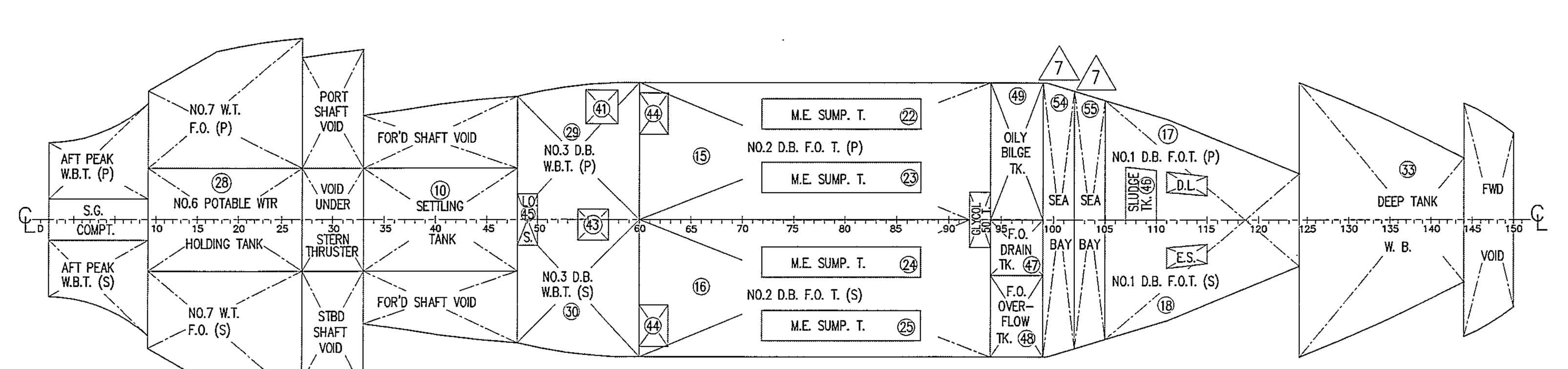

BELOW TANK TOP

TANK CAPACITIES

TANKS	No.	TANK		LOCATION FRAME No.	CAPACITY M³	CAPACITY T	K.G. A/BL	L.C.G. A ⊕ F − M +	T.C.G. P ℄ C − M +	F.S.MNT MAX TM
FRESH WATER		S.G. = 1.000		FRESH WATER TANKS				MIDSHIP AT 0.100M AFT FR 80		
	1	FRESH WATER TANK	CENTRE	9 – 25	41.95	41.95	8.34	−30.65	0.00	14.6
	2	SEE S.W. BALLAST TANK								
	3	SEE S.W. BALLAST TANK								
	28	#6 POTABLE FRESH WATER HOLDING TANK	CENTRE	9 – 27	107.31	107.31	5.71	−29.64	0.00	80.1
		TOTAL FRESH WATER TANKS (100% FULL)			149.26	149.26				
FUEL OIL TANKS		S.G. = 0.860		FUEL OIL TANKS				MIDSHIP AT 0.100M AFT FR 80		
	4	#7 WING F.O. TANK	PORT	9 – 27	170.16	146.34	7.73	−29.73	−5.03	116.9
	5	#7 WING F.O. TANK	STBD	9 – 27	171.22	147.25	7.74	−29.73	5.01	120.6
	6	#6 WING F.O. TANK	PORT	27 – 33	65.74	56.54	8.02	−24.88	−5.39	49.5
	7	#6 WING F.O. TANK	STBD	27 – 33	66.37	57.08	8.03	−24.89	5.37	51.7
	8	#5 WING F.O. TANK	PORT	33 – 48	100.56	86.48	5.89	−19.55	−7.11	4.4
	9	#5 WING F.O. TANK	STBD	33 – 48	100.56	86.48	5.89	−19.55	7.11	4.4
	10	#4 D.B. F.O. TANK – SETTLING TANK	CENTRE	33 – 48	104.65	90.00	2.68	−19.29	0.00	67.2
	11	#4 WING F.O. TANK	PORT	48 – 60	84.24	72.45	5.61	−12.92	−7.38	2.9
	12	#4 WING F.O. TANK	STBD	48 – 60	86.88	74.72	5.68	−12.99	7.37	3.3
	13	#3 WING F.O. TANK	PORT	60 – 99	267.51	230.06	5.91	− 0.15	−7.48	12.4
	14	#3 WING F.O. TANK	STBD	60 – 99	264.88	227.80	5.89	− 0.10	7.49	12.1
	15	#2 D.B. F.O. TANK	PORT	60 – 94	127.01	109.23	0.81	− 1.28	−3.47	72.0
	16	#2 D.B. F.O. TANK	STBD	60 – 94	127.01	109.23	0.81	− 1.28	3.47	72.0
	17	#1 D.B. F.O. TANK	PORT	105 – 123	71.34	61.35	1.31	16.65	−2.37	57.9
	18	#1 D.B. F.O. TANK	STBD	105 – 123	79.98	68.78	1.31	16.40	2.24	63.4
	19A	FUEL OIL – DAY TANK	STBD	89 – 99	30.45	26.19	11.62	7.10	7.63	2.5
	19B	FUEL OIL – DAY TANK	PORT	87 – 99	36.54	31.42	11.62	6.60	−7.63	3.0
		TOTAL FUEL OIL TANKS (98% FULL)			1955.10	1681.39				
LUBE OIL TANKS		S.G. = 0.900		LUB OIL TANKS				MIDSHIP AT 0.100M AFT FR 80		
	20	L.O. STORAGE TANK	PORT	53 – 60	24.98	22.49	7.60	−11.65	−2.90	3.1
	21	L.O. STORAGE TANK	STBD	53 – 60	24.98	22.49	7.60	−11.65	−0.63	3.1
	22	#1 M.E. LUB OIL SUMP TANK	PORT	73 – 88	7.03	6.32	1.46	0.47	−4.99	1.2
	23	#2 M.E. LUB OIL SUMP TANK	STBD	73 – 88	7.03	6.32	1.46	0.47	−1.99	1.2
	24	#3 M.E. LUB OIL SUMP TANK	PORT	73 – 88	7.03	6.32	1.46	0.47	1.99	1.2
	25	#4 M.E. LUB OIL SUMP TANK	STBD	73 – 88	7.03	6.32	1.46	0.47	4.99	1.2
		TOTAL LUB OIL TANKS (98% FULL)			78.08	70.26				
S.W. BALLAST TANKS		S.G. = 1.025		S.W. BALLAST TANKS				MIDSHIP AT 0.100M AFT FR 80		
	2	#1 BALLAST WING TANK	PORT	123 – 144	97.92	100.37	8.33	26.29	−5.67	83.2
	3	#1 BALLAST WING TANK	STBD	123 – 144	97.92	100.37	8.33	26.29	5.67	83.2
	26	AFT PEAK W.B. TANK	PORT	−3 – 9	71.87	73.66	8.44	−36.14	−4.30	76.0
	27	AFT PEAK W.B. TANK	STBD	−3 – 9	72.44	74.25	8.45	−36.13	4.48	78.3
	28	SEE FRESH WATER TANKS								
	29	#3 D.B. W.B. TANK	PORT	48 – 60	55.22	56.60	1.15	−12.56	−3.11	115.0
	30	#3 D.B. W.B. TANK	STBD	48 – 60	55.22	56.60	1.15	−12.56	3.11	115.0
	31	#2 WING W.B. TANK	PORT	105 – 123	186.60	191.27	5.32	17.30	−6.29	6.6
	32	#2 WING W.B. TANK	STBD	105 – 123	186.60	191.27	5.32	17.30	6.29	6.6
	33	DEEP W.B. TANK	CENTRE	123 – 144	239.36	245.35	3.89	24.44	0.00	1092.2
	34	FORE PEAK W.B. TANK	CENTRE	150 – STEM	457.76	469.20	11.19	36.13	0.00	1655.6
		TOTAL S.W. BALLAST TANKS (100% FULL)			1520.91	1558.93				
ENGINEERS TANKS				ENGINEERS TANKS				MIDSHIP AT 0.100M AFT FR 80		
	35	NOT USED								
	36	EMERGY GEN F.O. TANK – 98%	STBD	87 – 89	6.09	5.23	11.62	4.10	7.63	0.5
	37	JACKET WATER HEADER TANK	1 OFF	79 – 84	2.00	2.00	8.60	0.85	−1.20	0.18
	38	FRESH WATER HEADER TANK	1 OFF	100 – 105	2.00	2.00	12.51	11.35	−7.98	0.18
	39	M.E. INJECTOR F.W. OBS/ EXP TANKS	4 OFF	73 – 75	1.20 *	1.20 *	7.25	−3.11	0.00	0.03 *
	40	M.E. CYL L.O. TANKS	4 OFF	72 – 74	1.37 *	1.23 *	8.74	−3.40	0.00	0.09 *
	41	GEARBOX L.O. STORAGE TANK	PORT	55 – 58	5.06	4.56	4.30	−11.65	−5.45	0.38
	42	MISC L.O. TANK UNIT	5 OFF	52 – 60	5.43 *	4.88 *	7.18	−11.90	7.18	0.26 *
	43	CPP SYSTEM STORAGE TK	1 OFF	54 – 57	4.95	4.46	4.30	−12.15	0.30	0.38
	44	LIPS C.P.P. HYDR PUMP TANKS, PORT & STBD	2 OFF	60 – 63	6.21 *	5.59 *	2.79	−9.15	0.30	1.62 *
		* FOR ALL TANKS								
MISCELLANEOUS TANKS				MISCELLANEOUS TANKS				MIDSHIP AT 0.100M AFT FR 80		
	45	LUB OIL SLUDGE TANK	CENTRE	48 – 50	3.91	3.52	1.21	−15.39	0.00	1.4
	46	FUEL PURIFIERS AND OWS SLUDGE TANK	PORT	107 – 110	8.63	8.63	1.25	14.34	−1.21	1.8
	47	FUEL OIL DRAIN TANK	INNER STBD	94 – 99	12.51	10.76	1.00	8.35	1.31	3.4
	48	FUEL OIL OVERFLOW TANK	OUTER STBD	94 – 99	16.81	14.45	1.10	8.34	4.60	10.8
	49	OILY BILGE RETENTION TANK	PORT	94 – 99	29.32	25.22	1.06	8.34	−3.20	50.8
	50	MAIN ENGINE TREATED WATER TANK	CENTRE	92 – 94	5.07	5.56	0.99	6.60	0.00	1.7
FRESH WATER				SEA BAYS				MIDSHIP AT 0.100M AFT FR 80		
	54	SEA BAY – AFT		99 – 102	45.35	46.48	1.34	10.35	0.00	305.5
	55	SEA BAY – FWD		102 – 105	43.94	45.04	1.35	11.85	0.00	305.5
	56	INCINERATOR SLUDGE TANK	PORT	100 – 105						
	57	SEA BOX – PORT, INNER AND OUTER		99 – 105						
	58	SEA BOX – STBD, INNER AND OUTER		99 – 105						

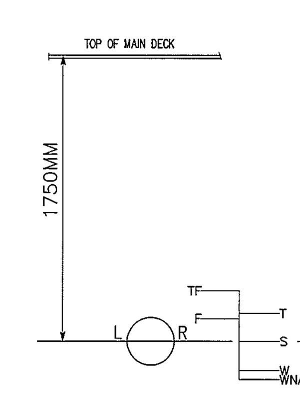

TF 309MM ABOVE S
F 137MM ABOVE S
T 172MM ABOVE S
W 172MM BELOW S
WNA 222MM BELOW S

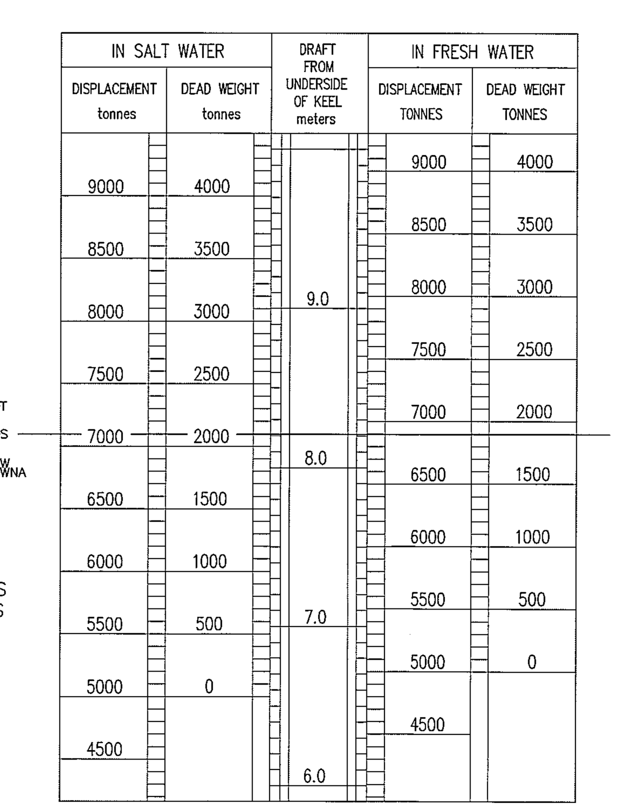

GENERAL PARTICULARS

LENGHT OVERALL	88.00 M
LENGTH B.P.	75.00 M
BREADTH MLD (MAIN DECK)	17.50 M
BREADTH EXTREME (OVER FENDERS)	17.82 M
DRAFT DEEP (DESIGN)	8.30 M
DRAFT SUMMER	8.27 M
DRAFT ICEBREAKING (WINTER)	8.10 M
DEPTH MLD (MAIN DECK)	10.00 M
DEPTH MLD (FORCLE DECK)	13.50 M
TONNAGE GROSS	4233.71
NET	1955.64
PORT OF REGISTRY B.C.	OTTAWA

REVISION TABLE

NO:	ZONE:	DATE:	BY:	APPROVAL:	DESCRIPTION:
7	10B,D–H	01/05/00	PMH	–	MADE CHANGES AS PER COMMENTS BY CHIEF ENGINEER BLAIR GILHEN
6	12G,3EN	04/01/00	PMH	–	CHANGED #6 TANK FR WBT TO POTABLE FW HOLDING TK. AND CHANGED DRAWING NUMBER FROM 00–00–14 TO T131027
5	–	27/07/99	C.J.G.	–	REVISED TO DATE
4	–	20/03/98	D.H.	–	MODIFIED BY DFO/CCG
3	–	26/03/97	MT	–	SCANNED AND VECTORIZED BY OTTAWA
2	–	02/09/83	BYC	–	DEADWEIGHT SCALE CHANGED
1	–	06/83	A.	–	ORGINAL ISSUE FROM BURRARD YARROWS CORP.

REF NO.	DWG NO.	TITLE
–	–	–

REFERENCE DRAWINGS

FISHERIES and OCEANS CANADA — PÊCHES ET OCÉANS CANADA

COAST GUARD MARITIMES — GARDÉ CÔTIERE MARITIMES

VESSEL: C.C.G.S. TERRY FOX

TITLE:

TANK CAPACITY PLAN

APPROVALS AGENCY	REPRESENT	DATE
CCG	–	DD/MM/YY
TC	–	DD/MM/YY
CLASSSo	–	DD/MM/YY
–	–	DD/MM/YY

DRAWN BY: DEREK HART — DATE 20/03/98

CHECKED: – — DATE DD/MM/YY

FILENAME: T131027001R7 — SCALE: 1:200

SHIPYARD DWG NO: 00–00–14 — SHIPYARD: BURRARD YARROWS CORP.

SIZE AO — CCG DWG NO.: T131027 — REV: 7 — SHEET: 1/1

FILE: U:\DFOVESSELS\TERRY FOX\GENERAL\ARRANGEMENT\T131027001R7

VECTOR DIR - T131027001R7-LAYOUT1.PLT - T131027001R7-LAYOUT1.PLT - 3/18/2009 3:19:48 PM