Correctional Service Canada
Service correctionnel Canada

SAFETY, RESPECT AND DIGNITY FOR ALL

LA SÉCURITÉ, LA DIGNITÉ ET LE RESPECT POUR TOUS

Technical Considerations

GO AND GI PROJECTS

SECURE BUILDING ENVELOPE FOR GI BUILDING AT MAXIMUM SECURITY INSTITUTIONS

V1. 16 March 2012

Canada

TABLE OF CONTENTS

Secure Perimeter Building Materials

The GI buildings with the secure building envelop are located in non inmate areas of the maximum security institutions. They are not intended to have any inmate activity or visits to the building. The secure building envelop is intended to resist unwanted access from the exterior. There are no added secure separations within the building. All other interior finishes remain as defined in the regular performance specs for the GI buildings.

To meet the security needs of the GI building the perimeter walls the following elements are required:

1. Walls will be reinforced with 14 Gauge (2.03 mm) steel plates secured directly to the outside of the structure of the building and on both levels.
2. All perimeter windows on both levels will be covered by a security screen panels secured directly to the structure of the building.
3. All perimeter doors will be institutional security type doors with security hardware. All door frames will be secured directly to the building structure.

The following information that is extracted from CSC Technical Criteria is provided as a guide to the requirements to secure the perimeter of this building.

A-2 ARCHITECTURE – BUILDING CONSTRUCTION

1. SCOPE

This section outlines security requirements for exterior walls, which form a part of the structure and enclosure of a building in a correctional institution.

2. RELATED SECTIONS

A–3 – Grilles, Screens & Modesty Barriers
A–5 – Doors and Frames
A–6 – Detention Hardware

The requirement for the wall of the secure envelope is to apply a 14 Gauge steel plate to the exterior wall that is secured directly to the building structure. Masonry systems may be proposed as alternates to meet the wall security requirements. The following drawing is a sample wall assembly. These are **SAMPLE DETAILS ONLY**.

SAMPLE WALL FOR GI BUILDING WITH 14 GA. STEEL PLATE REQUIREMENT INCLUDED.

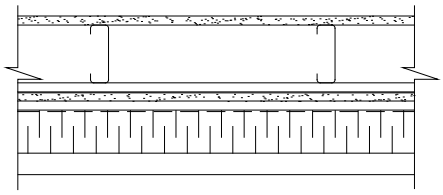

ULC DES W424
16mm TYPE "X" GYPSUM BOARD
102mm x 1.5mm THK. STRUCT'L STL. STUDS AT 400 O/C,
GALV. 14 GA.(2.03mm) STEEL SECURITY PLATE MECHANICALLY FASTENED W/ SECURITY SCREWS @ 300 o/c
13mm GLASS MAT EXTERIOR SHEATHING FOR UNIT "J", & 2ND. FLOOR UNITS "A" & "E"
RUBBERIZED MEMBRANE
75mm 'Z' GIRTS HORIZONTALLY AT SPACING TO EQUAL WIDTH OF INSULATION PANELS
75mm RIGID INSULATION
38mm PREFIN. MTL. SIDING (VERTICALLY)

A-3 ARCHITECTURE – GRILLES, SCREENS & MODESTY BARRIERS

1. SCOPE

This section identifies the requirements for all grilles and modesty barriers used in correctional institutions.

2. RELATED SECTIONS

2.1 Technical Criteria Document sections:

A–2 – Building Construction
A–5 – Doors
A–6 – Hardware

2.2 Standards

2.2.1 ASTM Standards

- A627-03 – Test Methods for Tool-Resisting Steel Bars, Flats, and Shapes for Detention and Correctional Facilities
- F2322-03 – Test Methods for Physical Assault on Vertical Fixed Barriers for Detention and Correctional Facilities

3. DEFINITIONS

Structural Quality Steel: Steel rods, flats and shapes, including tubing, used for security purposes conforming to *CAN/CSA G40.20-04/G40.21-04 (R2009)*[1], Grade 300W or to *ASTM A36/A36M-08*[2].

4. SECURITY MESH GRILLES

As this type of window grille provides a moderate resistance to attack, the design must provide clear evidence of any tempering. Security mesh should be used so that any tempering or damages cannot be simply the result of an involuntary "accident". There must be no removable part or loose section resulting from breakage having a sharp edge or that can be used as a weapon.

[1] CAN/CSA G40.20-04/G40.21-04 (R2009) – General Requirements for Rolled or Welded Structural Quality Steel/Structural Quality Steel

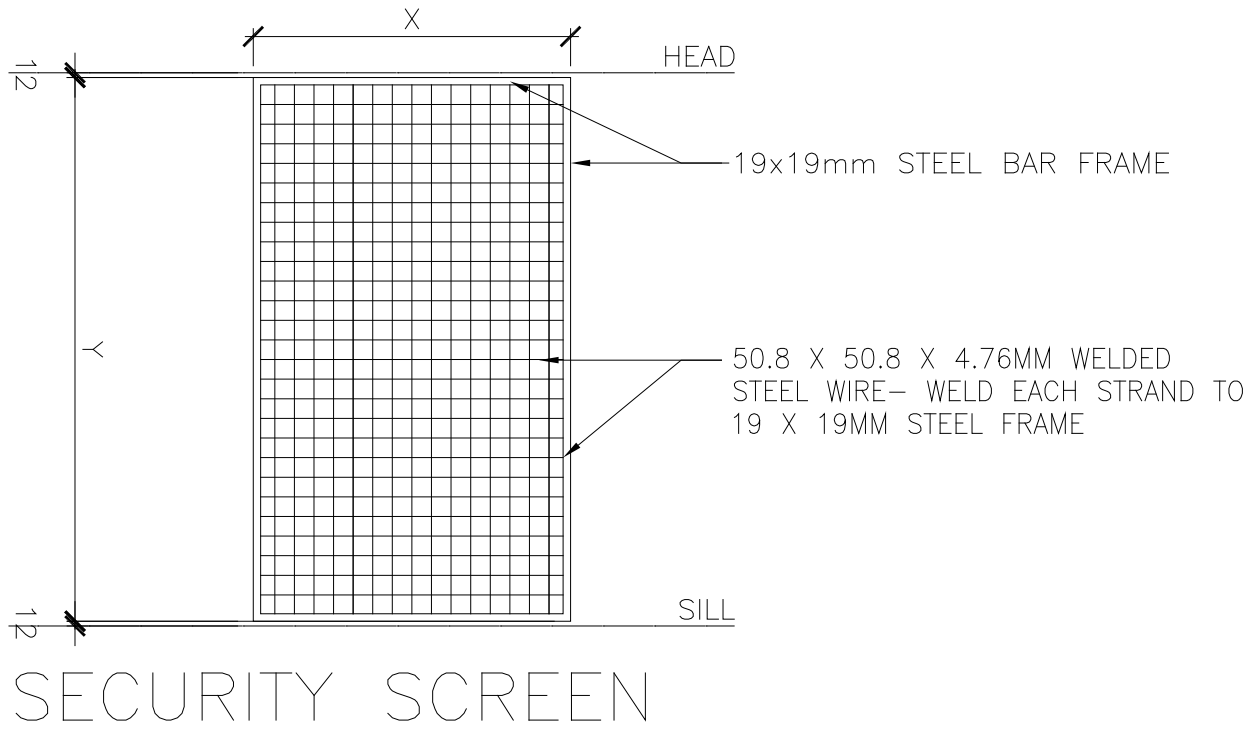

TYPICAL ELEVATION

The security screens are to be secured directly to the building structure directly and minimum interval of 300mm.

Screens will be finished to withstand exterior elements to resist ware and corrosion.

The following drawings illustrate two sample installation details. One secured to masonry structure and one to structural steel frame. These are **SAMPLES DETAILS ONLY.**

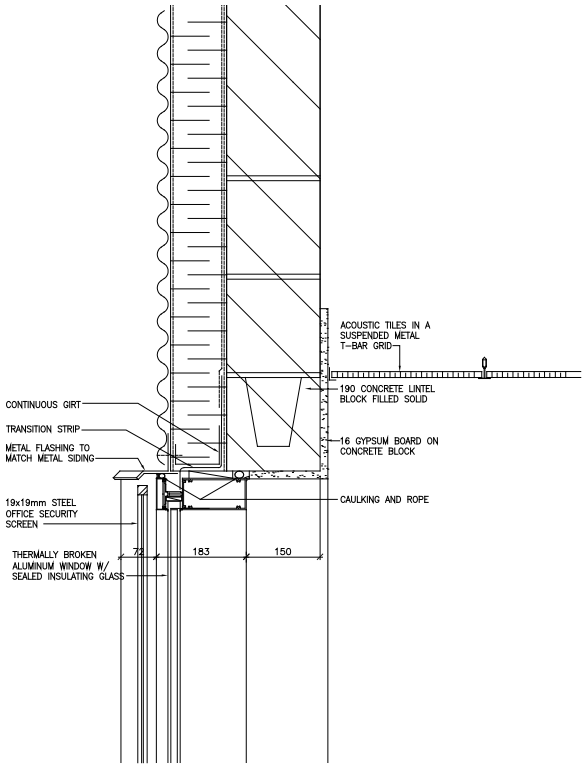

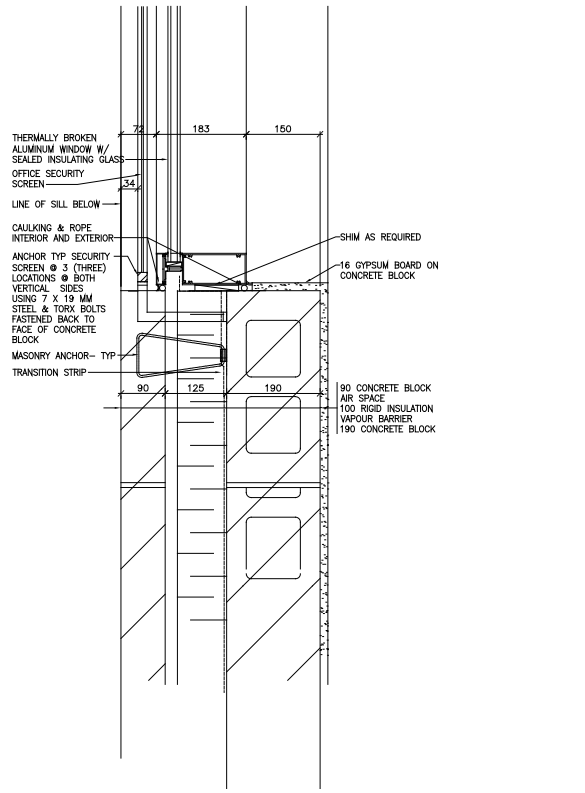

SAMPLE WALL SECTION 1

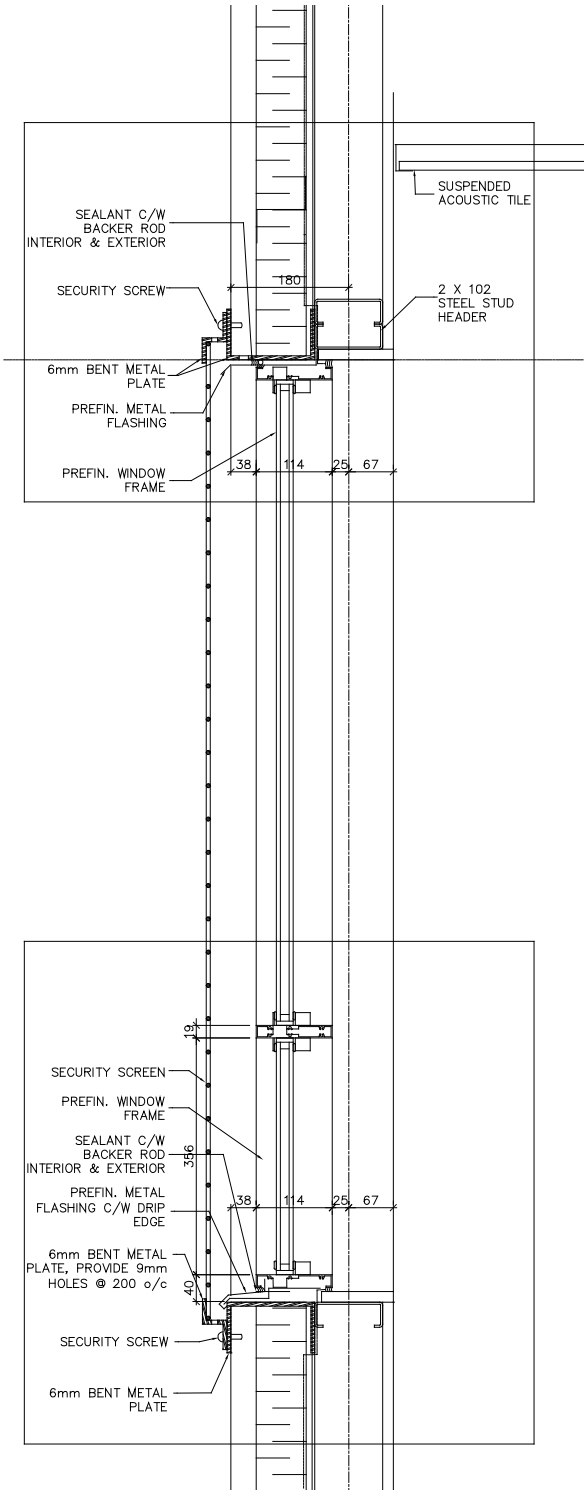

SAMPLE WALL SECTION 2

A–5 ARCHITECTURE – DOORS & FRAMES

1. SCOPE

This section identifies the requirements for all doors and frames used in correctional institutions.

2. RELATED SECTIONS

2.1 Technical Criteria Document sections:

A–3 – Grilles, Screens & Modesty Barriers
A–6 – Hardware

2.2 CSC/PWC Specifications

08 34 63 Detention hollow metal frames, doors, and door frames (11193 before 2004)
- 08 34 63.13 Steel Detention Doors and Frames
- 08 34 63.16 Steel Plate Detention Doors and Frames
- 08 34 63.33 Detention Door Frame Protection

08 71 63 Detention Door Hardware (11192 before 2004)
11 19 13 Detention Pass-Through Doors

2.3 Standards

2.3.1 <u>ANSI/BHMA – American National Standard</u>
- A156.4-2008–Doors Controls – Closers, Oct. 2008
- A156.14-2007–Sliding and Folding Door Hardware, Sept. 2007

2.3.2 <u>NAAMM HMMA – National Association of Architectural Metal Manufacturers</u>
- 801-05–Glossary of Terms for Hollow Metal Doors & Frames, 8d, 2005
- 802-07–Manufacturing of Hollow Metal Doors & Frames, 8d, May 2007
- 803-08–Steel Tables, 8d, December 2008
- 805-10–Recommended Selection and Usage Guide for Hollow Metal Doors & Frames, 8d
- 810-09–Hollow Metal Doors, 8d
- 820-08–Hollow Metal Frames, 8d
- 830-02–Hardware Selection for Hollow Metal Doors & Frames, 8d, Jan. 2002
- 831-97–Hardware Locations for Hollow Metal Doors & Frames, 8d, May 1997
- 841-07–Tolerances and Clearances for Commercial Hollow Metal Doors & Frames, 8d, June 12, 2007
- 850-00–Fire-Rated Hollow Metal Doors & Frames, 3rd Edition, 8d, Feb. 2000
- 861-06–Guide Specifications for Commercial Hollow Metal Doors & Frames, 6th Edition, 8d, December 5, 2006
- 862-03–Guide Specifications for Commercial Security Hollow Metal Doors & Frames, 8d, August 26, 2003
- 863-04–Guide Specifications for Detention Security Hollow Metal Doors & Frames, 8d, January 26, 2005
- 867-06–Guide Specifications for Commercial Laminated Core Hollow Metal Doors & Frames, 8d, March 27, 2006
- 890-06–Technical Summary Hollow Metal

2.3.3 <u>ASTM Standards</u>
- F1450-05–Test Methods for Hollow Metal Swinging Door Assemblies for Detention Facilities *(under revision - 2011)*
- F1577-05–Test Methods for Detention Locks for Swinging Doors
- F1592-05–Test Methods for Detention Hollow Metal Vision Systems
- F1643-05–Test Methods for Detention Sliding Door Locking Device Assembly

- F1758-05–Test Methods for Detention Hinges Used on Detention-Grade Swinging Doors
- F1915-05–Test Methods for Glazing for Detention Facilities

3. DOOR CLASSIFICATIONS

3.1 Detention Doors and Frames (DD)

Detention doors and frames exceed heavy duty commercial grade construction and are used to restrict or control the movement of persons for security reasons.

4. DOOR STYLE

ALL PERIMETER DOORS TO BE **D** STYLE minimum dimension of 900*2100

Main door must be equipped with BF operator suitable for detention door.

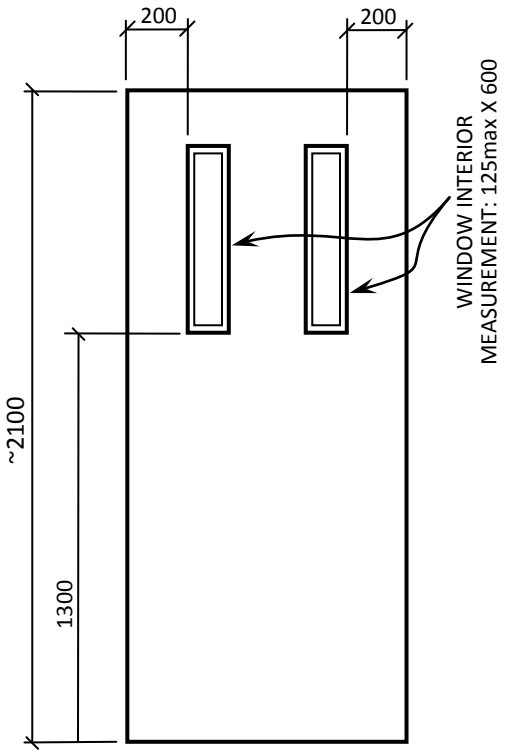

5. DOOR FUNCTIONS

5.1 Movement

5.1.1 A swing (**SG**) movement allows a door to rotate on a vertical axis. The vertical axis of rotation being the centerline of the hinge rods or "pins", or using a center pivot set. The swing of doors shall be in accordance with good architectural practice when security is not a consideration.

5.2 Locking

5.2.1 A Manual Lock (**LM**) is activated by a manually turned key or device.

5.3 Operation

5.3.1 Manual (**M**) operation indicates that the opening or closing of a door is manually executed. Daily operations of this building to be reviewed with institution.

6. GENERAL CRITERIA

- Door thickness: 50mm (2 inches)
- Skin thickness: 2mm (14 gauge)
- Frame thickness: 2.3mm (12 gauge) where no core filling included in wall detailing to secure fames to structure.
- Frame thickness: 2mm (14 gauge). There is no need to use a thicker gauge when the frame is backed by grout or concrete having been set in place before the CIP pour or block work.
- Fabrication: according to standard HMMA 863-04 for hollow steel detention doors which ensures that doors are reinforced at the strike as well as other critical areas.
- Testing: according to ASTM F1450-05 for static, rack, and impact loads. Doors meeting these tests with a skin gauge of 2mm satisfy the required performance for CSC doors.
- Doors are to be ASTM F1450-05 Grade 2
- Frames are to be ASTM F11592 Grade 1
- Glazing in doors for 125mm (5 inch) viewing ports: 12mm (0.5 inch) Non treated float or plate safety glass: 6mm /3mil PVB interlayer/ 6mm.

A-6 ARCHITECTURE – HARDWARE

1. SCOPE

This section is a guide for the selection and specification of all hardware for correctional institutions.

2. RELATED SECTIONS

2.1 Technical Criteria Document

A–5 – Doors and Frames

2.2 CSC/PWC Specifications (NMS–CSC Masterformat2010 Sections)

08 34 63 – Detention hollow metal frames, doors, and door frames[3]

- 08 34 63.13 – Steel Detention Doors and Frames
- 08 34 63.16 – Steel Plate Detention Doors and Frames
- 08 34 63.33 – Detention Door Frame Protection

08 71 63 – Detention Door Hardware[4]

2.3 Detention Hardware Testing Standards

ASTM F1450–05 – Test Methods for Hollow Metal Swinging Door Assemblies for Detention Facilities

ASTM F1577–05 – Test Methods for Detention Locks for Swinging Doors

ASTM F1643–05 – Test Methods for Detention Sliding Door Locking Device Assembly

ASTM F1758–05 – Test Methods for Detention Hinges Used on Detention-Grade Swinging Doors

3. DEFINITIONS

3.1 Detention Hardware (DH): Hardware used for containment and against forced intrusion at Medium and Maximum Institutions. Such hardware shall be of a design and type which provides reliable operation and which prevents and inhibits tampering. Detention hardware shall be used for Detention doors and grilles. Detention Hardware latches are always manually controlled using a key and electromechanically or pneumatically remotely controlled. The different levels of Detention Hardware are:

DH2 – Maximum Security Detention Hardware for swinging door. Often referred by the manufacturers as High Security.

4. DETENTION HARDWARE

4.1 Lock Mounting

Lock mountings are used to fasten certain Detention locks to steel or grille doors in a manner which will assure absolute security from tampering, resistance to wear and tear, and allowance for the removal of locks for cleaning and repairs. Lock mountings shall be used for all Detention locks as recommended by the manufacturer.

5.1.1 Protective pipe collar with a continuous weld must be used when a lock cylinder protrudes by more than 8 mm beyond the face of the frame.

5.1.2 All lock mountings used in situations exposed to weather shall be galvanized and provided with weep holes in the bottom to drain off moisture condensed in the lock or in the mounting.

---

[3] Previous version (<2004): Section 11193 – Detention Doors, Panels and Frames

[4] Previous version (<2004): Section 11192 – Detention Hardware

4.2 Hinges

Ball bearing Detention hinges shall be used for doors with Detention locks; such heavy duty hinges shall be used for swing doors on cells, corridors, entrances, and for other normal sized doors. Two hinges (one pair) shall be used for doors weighing up to 110 kg; three hinges (a pair and a half) shall be used for doors which are heavier. Light duty Detention hinges are to be used for access panels, key cabinets and control cabinet doors. Two hinges (one pair) shall be used for doors or steel plates weighing 70 kg or less.

4.3 Keying

5.3.1 All locks shall be keyed individually and shall have a maximum of three keys supplied for each lock. Each key shall be stamped with a code number and date; all keys for Detention hardware locks shall be delivered in a sealed container to the designated CSC representative.

5.3.2 All locks will be delivered in the unlocked position for ease of installation.

5.3.3 No master keying or construction keying shall be allowed for Detention hardware.

4.4 Fastening Devices

Fastening devices used in inmate areas shall include security screws, security nuts, rivets, spanner screws or other equally secure devices, depending on the particular installation or level of security required.

4.5 Finish Hardware for Detention Doors

4.5.1 Detention doors equipped with Detention hardware may require some finish hardware items such as door closers, silencers, kick plates etc. All such hardware shall be heavy duty commercial grade.

4.5.2 Door closers shall be installed in a manner which will prevent dismantling.

4.5.3 All double doors to have astragals and/or lock guard plates to prevent saw blades from being used on locks.

5. HARDWARE SCHEDULE

A proposed hardware schedule shall be submitted for review by CSC at the 66% working drawing stage. CSC/CSI Specification Section 08 71 63 – Detention Door Hardware (pre-2004, 11192 Security Hardware) shall be used to develop this hardware schedule.