VACUSAN

CERTIFIED DRAWING

Date Nov 30/84 Signed By

Vacusan reserves the right to alter details shown in this drawing at Vacusan's option in as far as such alterations will not effect the integrity of the Vacuum Collection System as specified by Vacusan.

TO BE MADE FROM 3/16" STEEL
EPOXY LINED
OUTSIDE: RED OXIDE PRIMAR

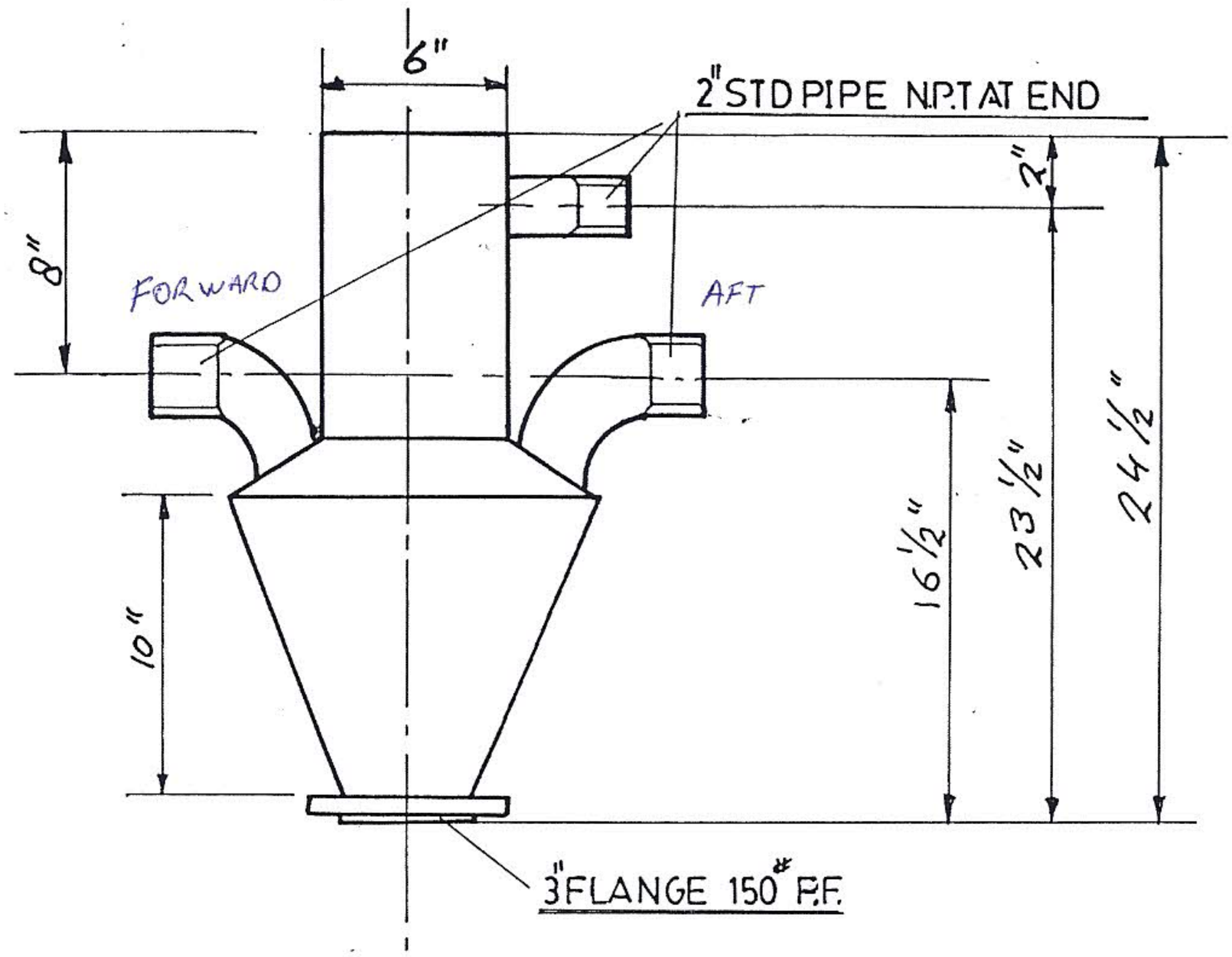


ELEVATION

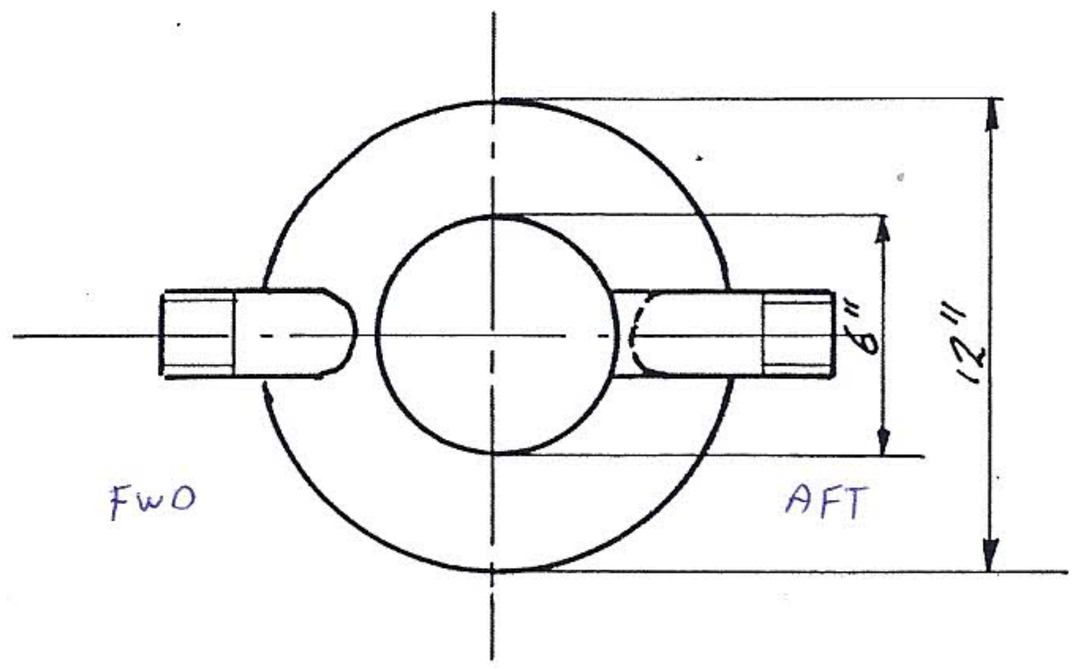


PLAN

VACUSAN

SEPERATOR

CCG NAVAIDS VESSELS

| Design CH | Drawn | Checked | Approved CH | Scale |
|---|---|---|---|---|
| Date 16/02/84 | Proj. No. | Dwg. No. 200149 | | Rev. 2 |

SSS-1 mar-92