PROPRIETARY INFORMATION
THIS DOCUMENT CONTAINS PROPRIETARY INFORMATION AND IS SUBMITTED UPON THE EXPRESS CONDITION THAT THE INFORMATION CONTAINED HEREIN WILL NOT BE USED DIRECTLY OR INDIRECTLY IN ANY WAY DETRIMENTAL TO THE INTERESTS OF LO-REZ VIBRATION CONTROL LTD.

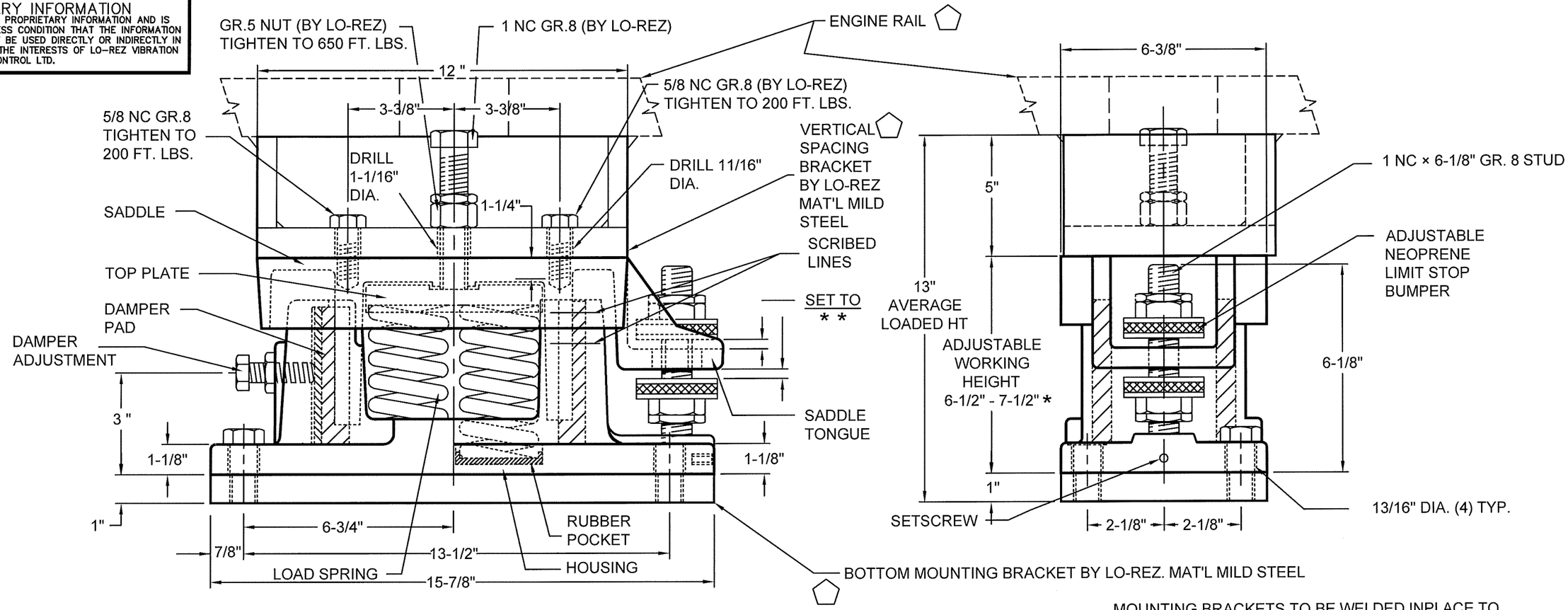


MOUNTING BRACKETS TO BE WELDED INPLACE TO SHIPS GIRDER AND ENGINE RAIL.

* * AS INDICATED IN APPLICABLE INSTRUCTION MANUAL

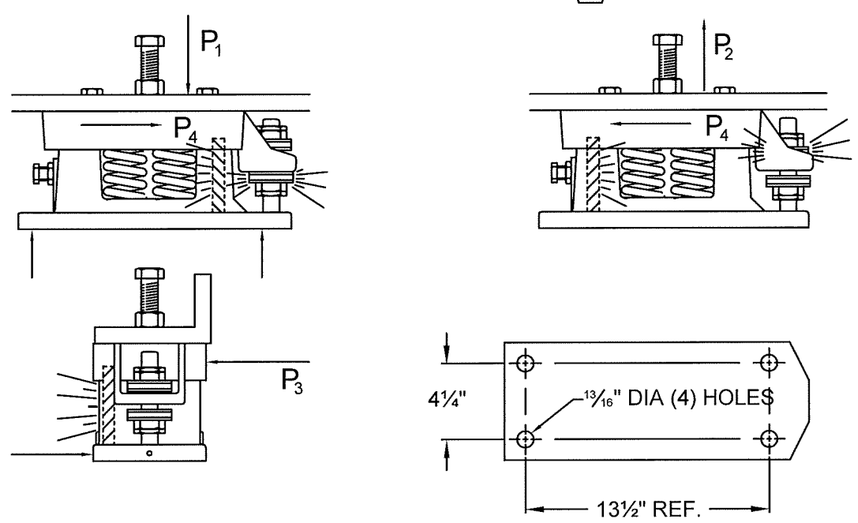


## OVERLOAD CAPACITIES (INTERMITTENT G-LOAD)

$P_1$ MAX. DOWNWARD LOAD CAPACITY OF LIMIT STOP = 15000 LBS.

$P_2$ MAX. UPWARD LOAD LOAD CAPACITY OF LIMIT STOP = 15000 LBS.

$P_3$ MAX. LATERAL LOAD CAPACITY = 12000 LBS.

$P_4$ MAX. LONGITUDINAL LOAD CAPACITY = 12000 LBS.

LOAD SPRINGS ARE SEATED IN RUBBER POCKETS. THERE IS NO METAL-TO-METAL CONTACT BETWEEN SADDLE AND HOUSING

WEIGHT 82 LBS WITHOUT BRACKETS

| ITEM No. | PART NO. | DESCRIPTION | QTY. |
|---|---|---|---|

BILL OF MATERIALS

| | |
|---|---|
| CUSTOMER | CANADIAN COAST GUARD |
| CUST. JOB # | |
| CUST. P.O. # | |
| PROJECT | CCGS GEORGE PEARKES |
| LO-REZ JOB # | J6933 |

EXCEPT AS NOTED TOLERANCES ARE

FRACTIONAL ± 1/64"

DECIMAL ± .005"

ANGULAR ±

LO-REZ VIBRATION CONTROL LTD.
VANCOUVER CANADA

**BR4-MS ISOLATOR**
HEAVY DUTY
OVERALL DIMENSIONS

| SCALE | DATE | BY | APPROVED |
|---|---|---|---|
| NONE | JULY 2009 | RAH | |

**DWG. No. F-1450-5**

| REV. | DESCRIPTION | DATE | BY |
|---|---|---|---|

REVISIONS

PROPRIETARY INFORMATION
THIS DOCUMENT CONTAINS PROPRIETARY INFORMATION AND IS SUBMITTED UPON THE EXPRESS CONDITION THAT THE INFORMATION CONTAINED HEREIN WILL NOT BE USED DIRECTLY OR INDIRECTLY IN ANY WAY DETRIMENTAL TO THE INTERESTS OF LO-REZ VIBRATION CONTROL LTD.

| ISOLATOR | SPRING * |
|---|---|
| BR4-MS-6000 | 2 x 1200 LB<br>2 x 1750 LB |
| BR4-MS-11000 | 4 x 2500 LB OUT<br>4 x 250LB INNER |
| BR4-MS-10000 | 4 x 2500 LB |
| BR4-MS-10000 | 4 x 2500 LB |
| BR4-MS-8000 | 4 x 2000 LB |
| BR4-MS-3600 | 4 x 900 LB |

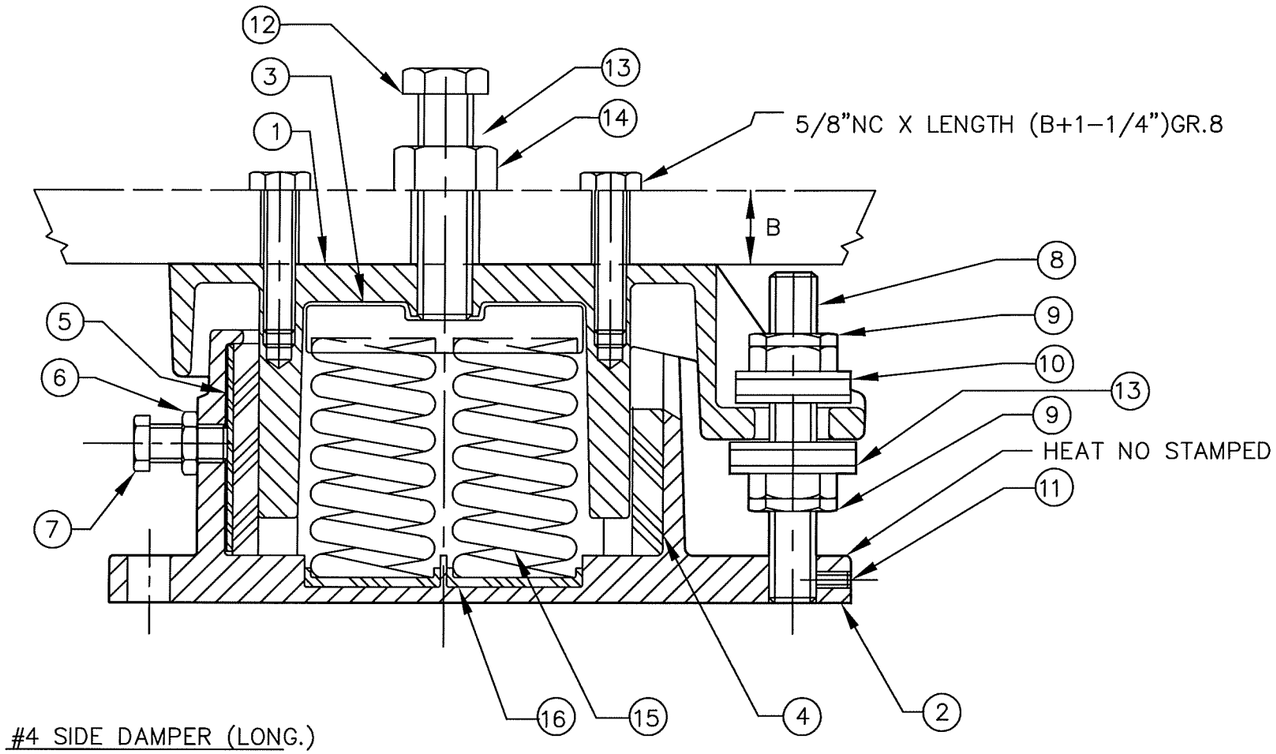


#4 SIDE DAMPER (LONG.)

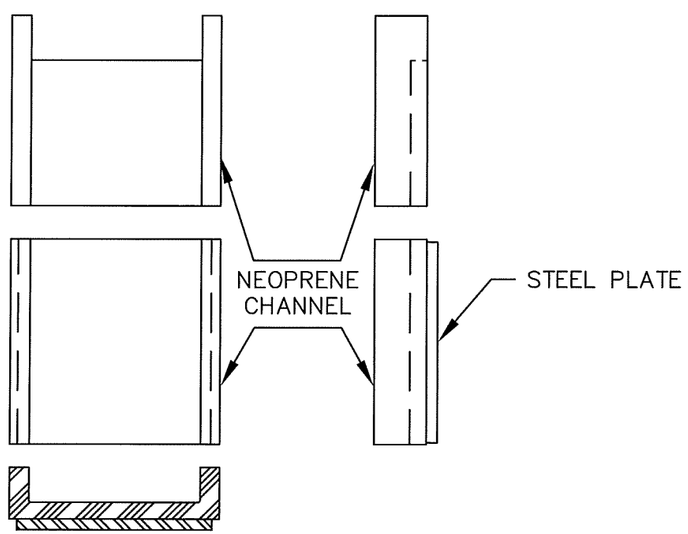


#5 SIDE DAMPER ASSY

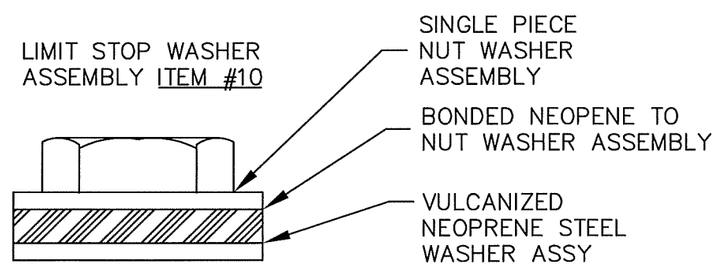


| ITEM No. | PART No. | DESCRIPTION | QTY. | REMARKS |
|---|---|---|---|---|
| 16 | F-1407-1 | SPRING CUP | 4 | NEOPRENE |
| 15 | * | SPRING | 4 | SEE CHART |
| 14 | | NUT, HEAVY HEX | 1 | 1 NC GR.5 |
| 13 | F-1406-2 | L/S NUT WSHR ASSY | 1 | SEE DET. |
| 12 | | BOLT,HEX HEAD | 1 | 1NCx5 GR.8 |
| 11 | | S.H.SETSCREW | 1 | 5/16NC x 1" |
| 10 | F-1406-1 | L/S NUT WSHR ASSY | 1 | SEE DET. |
| 9 | | JAM NUT | 2 | 1 NC |
| 8 | | LIMIT STOP STUD | 1 | 1NC x 6-1/8 |
| 7 | | BOLT, HEX HEAD | 1 | 5/8NCx1-3/8 |
| 6 | | JAM NUT, HEX | 1 | 5/8 NC |
| 5 | F-1405-1 | SIDE DAMPER ASSY | 1 | NEOPRENE |
| 4 | F-1404-1 | SIDE DAMPER | 1 | NEOPRENE |
| 3 | F-1403-1 | TOP PLATE | 1 | DUCT. IRON |
| 2 | F-1401-1 | HOUSING | 1 | DUCT. IRON |
| 1 | F-1402-1 | SADDLE | 1 | DUCT. IRON |

BILL OF MATERIALS

| | |
|---|---|
| CUSTOMER | CANADIAN COAST GUARD |
| CUST. JOB | |
| CUST. P.O. | |
| PROJECT | GEORGE PEARKES |
| LO-REZ JOB | J6933 |

EXCEPT AS NOTED TOLERANCES ARE

FRACTIONAL ±
DECIMAL ±
ANGULAR ±

LO-REZ VIBRATION CONTROL LTD.
VANCOUVER CANADA

# BR4-MS ISOLATOR GENERAL ASSEMBLY

| SCALE | DATE | BY | APPROVED |
|---|---|---|---|
| NONE | JULY 97 | RAH | |

DWG. No. F-1420-3

| REV. | DESCRIPTION | DATE | BY |
|---|---|---|---|

REVISIONS