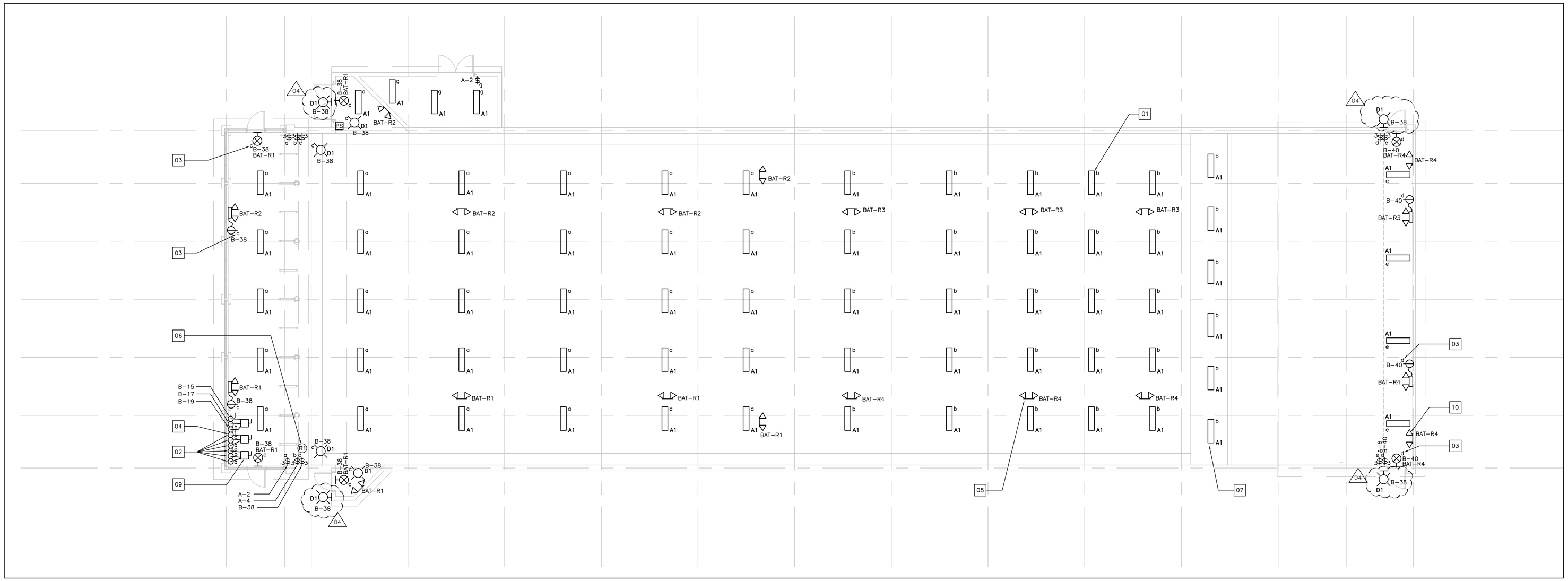

3 LIGHTING LAYOUT
E210 1:100

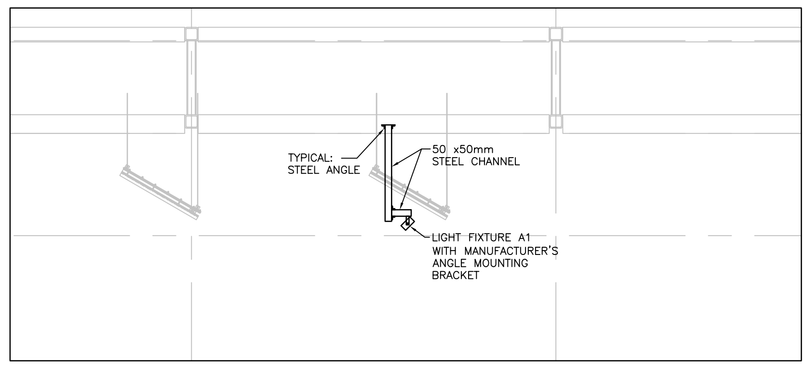

2 TYPE A1 LIGHT FIXTURE MOUNTING DETAIL
E210 E210 1:50

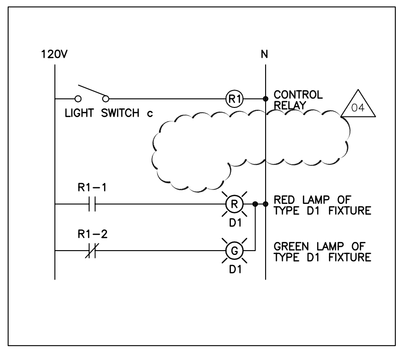

4 SAFETY/NOTIFICATION WIRING SCHEMATIC
E210 E210 N.T.S.

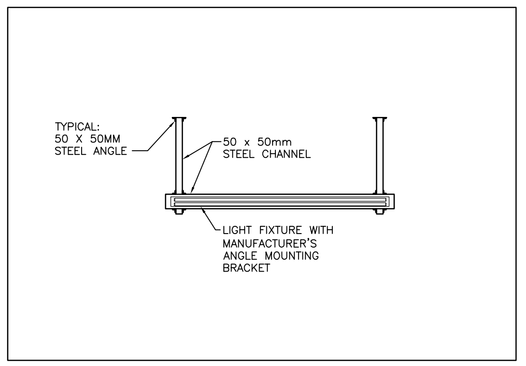

5 TYPE A1 LIGHT FIXTURE MOUNTING DETAIL
E210 E210 N.T.S.

GENERAL NOTES:

01 REFER TO DRAWING E-1-2 FOR EXTERIOR BUILDING MOUNTED LIGHTS AND CONTROLS. INSTALL LIGHTS AS INDICATED AND CONNECT TO CIRCUITS AS PER PANEL SCHEDULE OF DRAWING E-201.

02 REFER TO DRAWING E-220 FOR ELECTRICAL SYMBOLS LEGEND.

ELECTRICAL DRAWING LIST	
NUMBER	TITLE
E-210	FIRING RANGE ELECTRICAL LIGHTING LAYOUT
E-220	TRAINING BUILDING ELECTRICAL LIGHTING, POWER & SYSTEMS LAYOUTS

DRAWING NOTES:

01 TYPICAL:
PROVIDE 4' FLUORESCENT LIGHT FIXTURE C/W ANGLE MOUNTING BRACKET FOR LIGHTING OVER RANGE SHOOTING AREA. ANGLE LIGHT FIXTURE AT 45° AND SECURE TO STEEL CHANNEL. REFER TO DETAILS 1 AND 2 OF THIS DRAWING. SUSPEND LIGHT FIXTURE IN BULLET TRAP CORRIDOR AND AT SHOOTING PLATFORM TO 2450mm A.F.F.

02 TECK90 CABLES FOR LIGHTING CIRCUITS FROM TRAINING BUILDING. RUN WIRING TO LIGHT FIXTURES THROUGH ASSOCIATED LIGHT SWITCH. REFER TO DRAWING E-1-1.

03 TYPICAL:
PROVIDE POWER FOR EXTERIOR RATED BATTERY UNIT RECEPTACLE AND EXIT SIGN FROM LINE SIDE OF CORRESPONDING LIGHT SWITCH.

04 TECK90 CABLE FOR PHOTOCELL CONTROLLED EXTERIOR WALL MOUNTED LIGHT FIXTURES. REFER TO DRAWING E-1-2 FOR LOCATION OF LIGHT FIXTURES.

05 RESERVED. 04

06 PROVIDE A DUAL VOLTAGE RELAY WITH 120V COIL AND ONE (1) 120V NORMALLY CLOSED CONTACT AND ONE (1) 120V NORMALLY OPEN CONTACT FOR TYPE D1 LIGHT FIXTURES. INSTALL RELAY IN CSA TYPE 1 ENCLOSURE MOUNTED TO WALL ABOVE NORTH-WEST LIGHT SWITCHES. CONNECT RELAY AS PER SCHEMATIC DIAGRAM DETAIL 4.

07 TYPICAL:
COORDINATE LIGHTING LOCATIONS WITH STRUCTURAL FOR OPTIMUM LIGHTING COVERAGE. PROVIDE MOCK UP FOR APPROVAL BY DEPARTMENTAL REPRESENTATIVE.

08 TYPICAL:
PROVIDE 50 X 50mm CHANNEL WITH 50 X 50mm STEEL ANGLE BRACKETS SECURED TO STRUCTURE SIMILAR TO DETAIL 5/E-210 TO SUSPEND EMERGENCY LIGHTING, COORDINATE LOCATIONS ON SITE WITH DEPARTMENTAL REPRESENTATIVE.

09 PROVIDE 3-POLE NON-FUSED DISCONNECT SWITCHES, ONE (1) FOR EACH GROUP OF THREE (3) CIRCUITS OF THE SAME VOLTAGE FROM THE TRAINING BUILDING.

10 TYPICAL:
AIM REMOTE EMERGENCY LAMP HEAD AT WARNING SIGN ON DOOR INSTRUCTING OCCUPANTS TO PULL EMERGENCY MANUAL PULL STATION TO RELEASE THE ELECTROMAGNETIC LOCK IN THE EVENT OF AN EMERGENCY. COORDINATE EXACT LOCATION AND WORDING OF SIGN WITH DOOR HARDWARE CONTRACTOR.

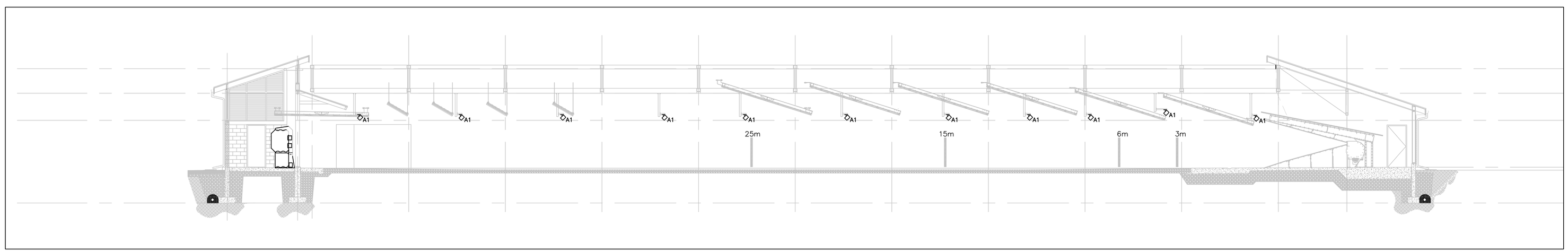

1 BUILDING SECTION
E210 1:100

Public Works and Government Services Canada
Travaux publics et Services gouvernementaux Canada

NORR Limited
An Ingenium Group Company
20 Gore Street, Unit 101
Kingston, ON, Canada K7L 2L1
www.norr.com

NORR
ARCHITECTS | ENGINEERS | PLANNERS

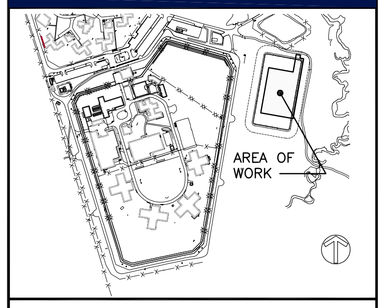

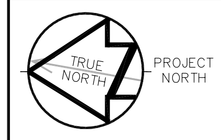

revision		date
04	ISSUED FOR ADDENDUM #1	13-01-04
03	ISSUED FOR BID	12-11-27
02	ISSUED FOR 99% REVIEW	12-11-16
01	ISSUED FOR 50% REVIEW	12-10-12

Do not scale drawings.
Verify all dimensions and conditions on site and immediately notify the Departmental Representative of all discrepancies.

A Detail No. / No. du détail
B drawing no. – where detail required / dessin no. – où détail exigé
C drawing no. – where detailed / dessin no. – où détaillé

project title / titre du projet
Gravenhurst Ontario
Correctional Service of Canada
Fenbrook Institution
2000 Beaver Creek Drive,
FENBROOK INSTITUTION
FIRING RANGE & TRAINING BUILDING

drawing title / titre du dessin
FIRING RANGE
ELECTRICAL LIGHTING LAYOUT

drawn by / dessine par: S.SCHWENDEMANN
designed by / conc par: S.SCHWENDEMANN
approved by / approuve par: M.SWAYNE
bid / offre: M. PISTARELLI — project manager / administrateur de projets
project date / date du projet: 2013-01-04
project no. / no. du projet: R.052544.001
drawing no. / dessine no.: E-210

GSC-B1 DATE PLOTTED: PLOT SCALE: CAD FILE: