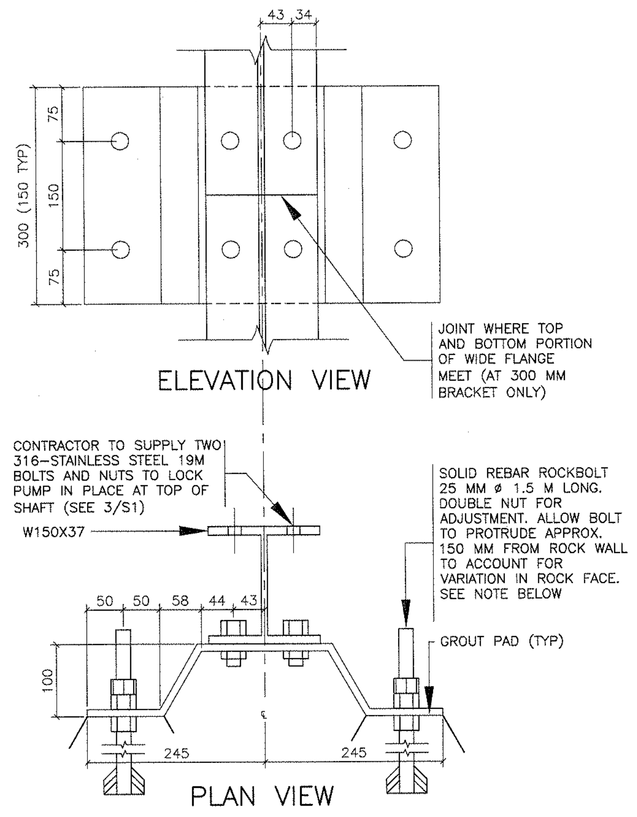

NOTE: 1. ALL PLATE 13 MM THICK U/N
2. JOINT IN WIDE FLANGE OCCURS ONLY AT 300 MM MIDDLE BRACKET

DETAIL – WALL BRACKET (4/S1)

SCALE : 1:5

0mm 100 200 300 400 500mm

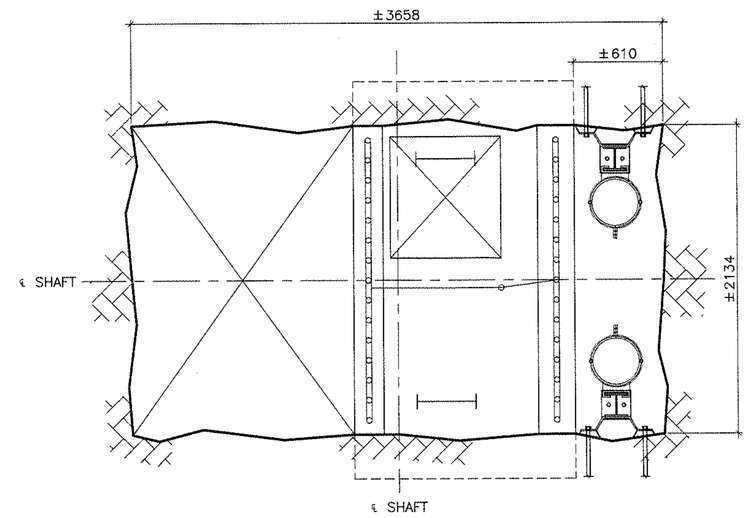

NOTE: ENSURE 1200 MM EMBEDMENT FOR ALL ROCK BOLTS

PLAN – PUMP SHAFT (2/S1)

SCALE : 1:25

0mm 500mm 1000m 1500m 2000m 2500m

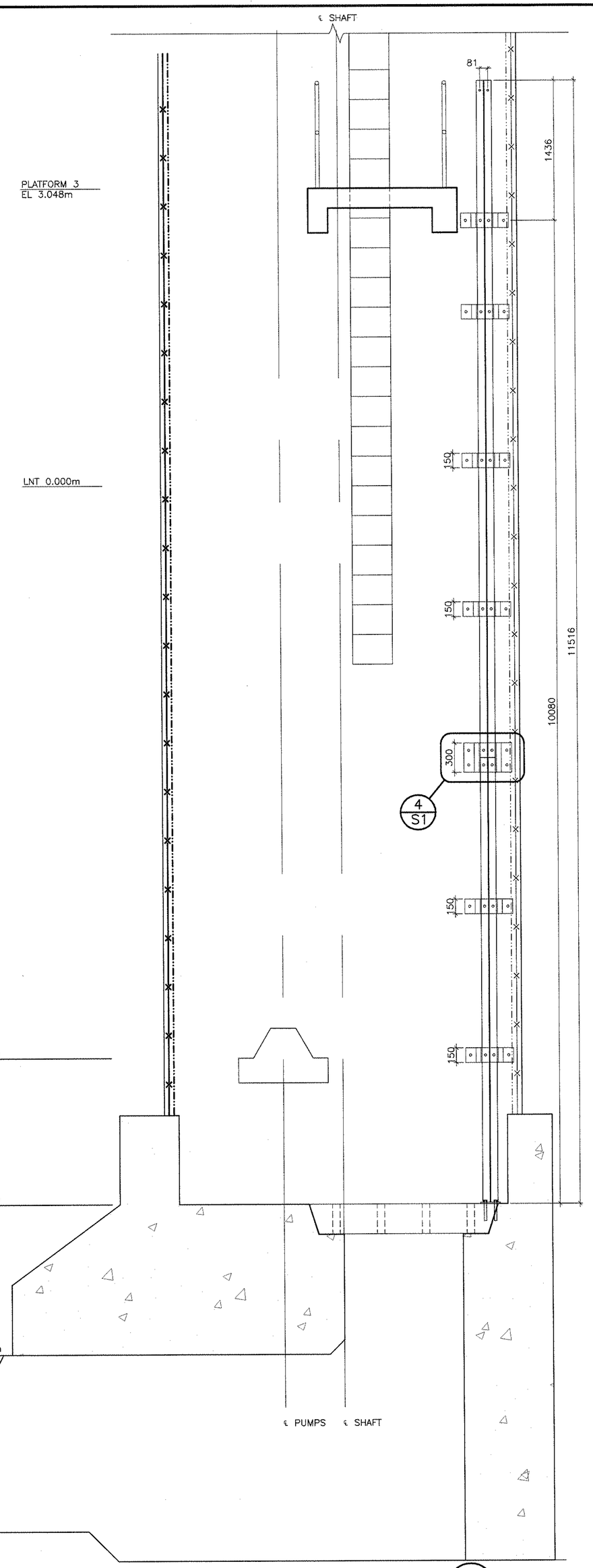

ELEVATION – PUMP SHAFT (1/S1)

SCALE : 1:25

0mm 500mm 1000m 1500m 2000m 2500m

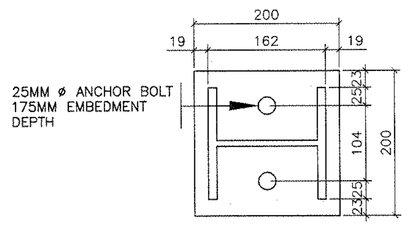

NOTE: ALL PLATE 13 MM THICK U/N

DETAIL – BASE PLATE (5/S1)

SCALE : 1:5

0mm 100 200 300 400 500mm

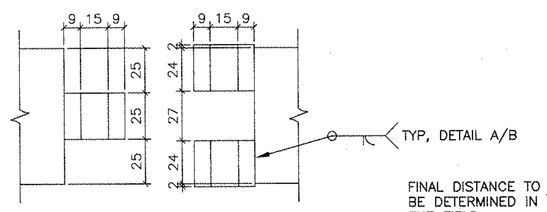

DETAIL A

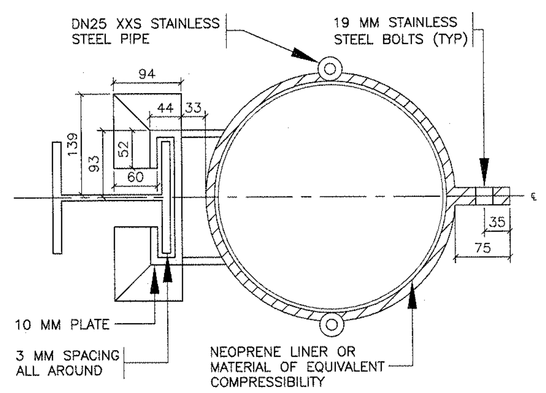

SECTION D–D

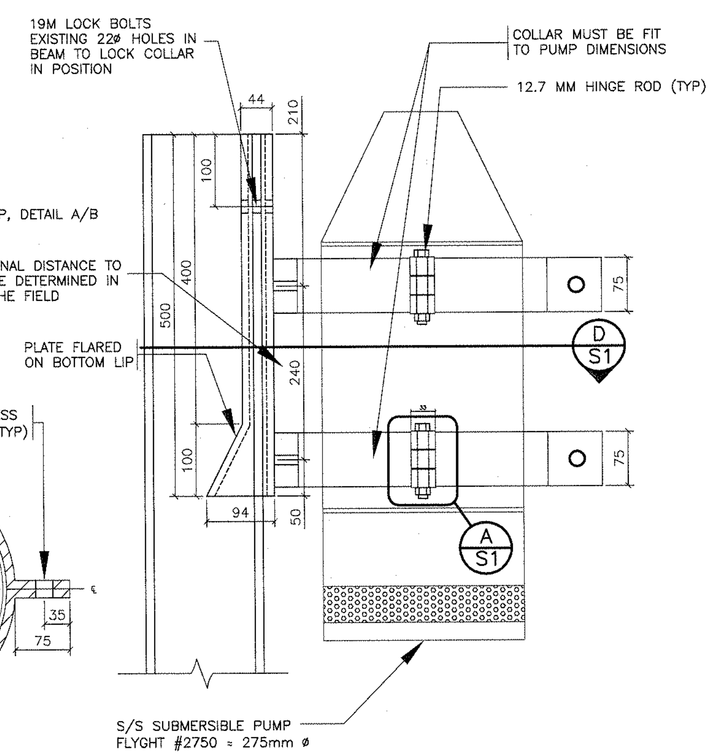

NOTE: ALL PLATE 13 MM THICK U/N

DETAIL – PUMP COLLAR (3/S1)

SCALE : 1:5

0mm 100 200 300 400 500mm

NOTE: 1. ALL 316 STAINLESS STEEL BEAMS, PLATES & ASSOCIATED NUTS, BOLTS & WASHERS ASSOCIATED WITH THE SS BEAM INSTALLATION ARE GOVERNMENT SUPPLIED.
2. CONTRACTOR SHALL SUPPLY ALL PLATES, PIPES, STRUCTURAL SHAPES, BOLTS, NUTS AND WASHERS FOR PIPE COLLAR. ALL SHALL BE 316 STAINLESS STEEL.
3. CONTRACTOR SHALL SUPPLY AND INSTALL ALL ROCK BOLTS AND ASSOCIATED NUTS, PLATES AND/OR WASHERS AS FOLLOWS:
A) ROCK BOLTS SHALL BE GALVANIZED SOLID DEFORMED BAR WITH NO LESS THAN 300 MM OF COARSE THREAD SUITABLE FOR TENSIONING BY MEANS OF HEXAGONAL NUTS.
B) THE DEFORMED STEEL BARS SHALL BE 25 MM DIAMETER WITH AN UINSTALLED LENGTH OF ROCK BOLTS SHALL BE 1.2 M.
C) EACH ROCK BOLT SHALL HAVE:
I) GALVANIZED BEVELLED HARDENED STEEL WASHERS (MIN. 2 PER BOLT).
II) A GALVANIZED HEXAGONAL NUTS (MIN. 3 PER BOLT).
III) A MECHANICAL ANCHOR.
D) THE STEEL FOR NUTS AND WASHERS, SHALL CONFORM TO ASTM A325 AND FOR BEARING PLATES CSA G40.21, GRADE 33G OR EQUIVALENT. GALVANIZING SHALL CONFORM TO CSA G164.

Public Works and Government Services Canada / Travaux Publics et Services gouvernementaux Canada

NOTES:
1. DO NOT SCALE FROM DRAWING.
2. CONTRACTOR MUST VERIFY ALL DIMENSIONS AND CONDITIONS ON SITE PRIOR TO PROCEEDING WITH ANY PORTION OF THIS WORK.

revisions		date
1	ISSUED FOR TENDER	JUL 16 2013

project / projet: SS GUIDE BEAMS INSTALLATION NAFC

drawing / dessin: SECTION, PLAN AND DETAILS

designed / conçu: PWGSC STAFF
date
drawn / dessiné: D.SOOLEY
date: JUNE 08, 2013
approved / approuvé: July 17/13
date
Tender / Soumission: July 17/13
PWGSC Project Manager / Administrateur de projets TPSGC

project number / no. du projet: R.058758.001

drawing no. / no. du dessin: S1

PWGSC B1 (2004)

E-DRM/GDD-E: 450416