TYPICAL DATA COMMUNICATIONS SYSTEM SCHEMATIC NOTE LEGEND:

1. EXISTING FLOOR MOUNT RACK IN SPECIFIED LAN ROOM TO REMAIN.
2. EXISTING CAT. 5e PATCH PANELS. REMOVE ALL CAT. 5e JACKS AND CABLING MADE AVAILABLE THROUGH THIS RENOVATION. ELECTRICAL CONTRACTOR TO RECONFIGURE EXISTING CAT. 5e PATCH PANELS WITH THE SLOTS MADE AVAILABLE THROUGH THIS RENOVATION PLUS 54 EXISTING UNUSED SLOTS IN PATCH PANELS TO MAKE CONTINUOUS ACTIVE ROWS IN EXISTING PATCH PANELS. REMOVE AND TURN OVER UNUSED PATCH PANELS TO DEPARTMENTAL REPRESENTATIVE. ALL MODIFIED TERMINATIONS SHALL BE NORD X, 25 YEAR RE-CERTIFIED.
3. EXISTING CAT. 6A PATCH PANEL WITH 32 OPEN SLOTS AVAILABLE FOR NEW TERMINATIONS TO BE COMPLETED BY CONTRACTOR.
4. NEW CAT. 6A PATCH PANELS AS SPECIFIED. PROVIDE NUMBER AS REQUIRED WITH 25% SPARE.
5. RUN CABLES TO RACK IN NEW CONDUITS STUBBED THROUGH CEILING SPACE.
6. DATA COMMUNICATIONS CABLE. REFER TO SPECIFICATIONS FOR TYPE. RUN ALL CABLING IN CABLE TRAY AS SPECIFIED.
7. RUN CABLE TO WALL OUTLETS AND SYSTEMS FURNITURE IN CONDUIT STUBBED INTO CEILING SPACE. CONDUIT SHALL RUN TO WITHIN 1m OF CABLE TRAY.
8. DATA OUTLET C/W COVERPLATE AS SPECIFIED. PROVIDE QUANTITY OF JACKS IN EACH OUTLET AS INDICATED ON FLOOR PLANS.
9. SURFACE MOUNT SYSTEMS FURNITURE DATA OUTLET AS SPECIFIED. ROUTE CABLING THROUGH SERVICE PANEL IN FURNITURE, EXIT FURNITURE AT BASE FEED LOCATION, INTO WALL BOX, UP CONDUIT TO CEILING SPACE, RUN IN CABLE TRAY TO LAN ROOM. REFER TO PLANS FOR NUMBER AND LOCATION OF FURNITURE MOUNTED OUTLETS.

PATCH CABLE. PROVIDE 2 PATCH CABLES FOR EVERY DROP INSTALLED. PROVIDE THE FOLLOWING:

LENGTH	QUANTITY
2135mm	60% PER TERMINATED JACKS IN PATCH PANELS. (TYPICAL) – BLUE IN COLOUR
2135mm	20% PER TERMINATED JACKS IN PATCH PANELS. (TYPICAL) – ORANGE IN COLOUR
2135mm	10% PER TERMINATED JACKS IN PATCH PANELS. (TYPICAL) – WHITE IN COLOUR
2135mm	10% PER TERMINATED JACKS IN PATCH PANELS. (TYPICAL) – GREEN IN COLOUR

TYPICAL SECOND FLOOR DATA COMMUNICATIONS SYSTEM SCHEMATIC GENERAL NOTES:

ELECTRICAL CONTRACTOR TO REMOVE ALL EXISTING DATA COMMUNICATIONS CABLING BACK TO EXISTING PATCH PANELS AT EXISTING FLOOR MOUNT RACKS. REMOVAL OF CABLING, OUTLETS AND RECONFIGURATION OF EXISTING PATCH PANELS MUST BE PERFORMED WHILE DEPARTMENTAL REPRESENTATIVE IS ON SITE TO ENSURE CORRECT CABLING AND OUTLETS ARE REMOVED AND RECONFIGURED.

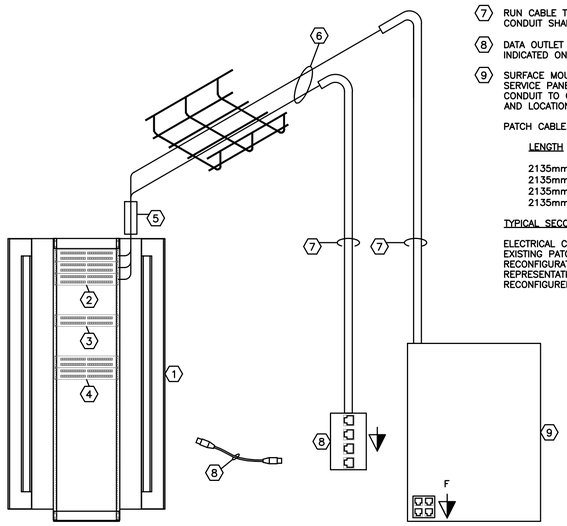

1 / E3.1 TYPICAL SECOND FLOOR DATA COMMUNICATIONS SYSTEM SCHEMATIC
SCALE NTS

TYPICAL VOICE COMMUNICATIONS SYSTEM SCHEMATIC NOTE LEGEND:

1. EXISTING RISER CABLE FROM MAIN FLOOR TO REMAIN.
2. EXISTING BUILDING TELEPHONE DEMARCATION EQUIPMENT ON SECOND FLOOR TO REMAIN.
3. NEW WALL MOUNT IDC/IDC VOICE CONNECTORS AS SPECIFIED.
4. EXISTING EQUIPMENT PLYWOOD TO REMAIN.
5. RUN CABLES TO TERMINATING EQUIPMENT IN NEW CONDUIT SLEEVES THROUGH CEILING.
6. VOICE COMMUNICATIONS CABLE, RUN IN CABLE TRAY AS SPECIFIED.
7. RUN CABLE TO WALL OUTLET IN CONDUIT STUBBED INTO CEILING SPACE. CONDUIT SHALL RUN TO WITHIN 1m OF CABLE TRAY.
8. VOICE OUTLET C/W COVERPLATE AS SPECIFIED. PROVIDE QUANTITY OF JACKS IN EACH OUTLET AS INDICATED ON FLOOR PLANS.
9. SURFACE MOUNT SYSTEMS FURNITURE VOICE OUTLET AS SPECIFIED. ROUTE CABLING THROUGH SERVICE PANEL IN FURNITURE, EXIT FURNITURE AT BASE FEED LOCATION, INTO WALL BOX, UP CONDUIT TO CEILING SPACE, RUN IN CABLE TRAY TO LAN ROOM. REFER TO PLANS FOR NUMBER AND LOCATION OF FURNITURE MOUNTED OUTLETS.
10. EXISTING GROUND TO REMAIN.

TYPICAL SECOND FLOOR VOICE COMMUNICATIONS SYSTEM SCHEMATIC GENERAL NOTES:

ELECTRICAL CONTRACTOR TO REMOVE ALL EXISTING VOICE COMMUNICATIONS CABLING AND RISER CABLES BACK TO EXISTING BICS BLOCKS AT EQUIPMENT PLYWOODS AND PATCH PANELS AT EXISTING FLOOR MOUNT RACKS. REMOVAL OF CABLING, OUTLETS AND RECONFIGURATION OF EXISTING PATCH PANELS MUST BE PERFORMED WHILE DEPARTMENTAL REPRESENTATIVE IS ON SITE TO ENSURE CORRECT CABLING AND OUTLETS ARE REMOVED AND RECONFIGURED.

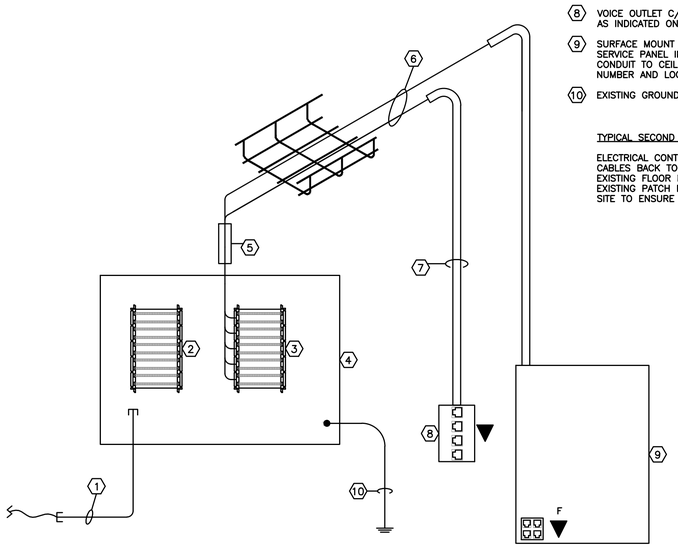

2 / E3.1 TYPICAL SECOND FLOOR VOICE COMMUNICATIONS SYSTEM SCHEMATIC
SCALE NTS

TYPICAL CABLE TELEVISION COMMUNICATIONS SYSTEM SCHEMATIC NOTE LEGEND:

1. EXISTING RISER CABLE TO REMAIN.
2. EXISTING CABLE TELEVISION EQUIPMENT DEMARCATION EQUIPMENT LOCATED ON SECOND FLOOR TO REMAIN..
3. EXISTING EQUIPMENT PLYWOOD TO REMAIN.
4. RUN CABLES TO EQUIPMENT PLYWOOD IN EXISTING CONDUIT SLEEVES THROUGH CEILING.
5. CO-AX CABLE, RUN IN CABLE TRAY AS SPECIFIED. COIL AN ADDITIONAL 3m OF CABLING FOR UTILITY CONNECTION.
6. RUN CABLE TO WALL OUTLET IN CONDUIT STUBBED INTO CEILING SPACE. CONDUIT SHALL RUN TO WITHIN 1m OF CABLE TRAY.
7. CABLE TELEVISION OUTLET C/W COVERPLATE AS SPECIFIED.
8. EXISTING GROUND TO REMAIN.

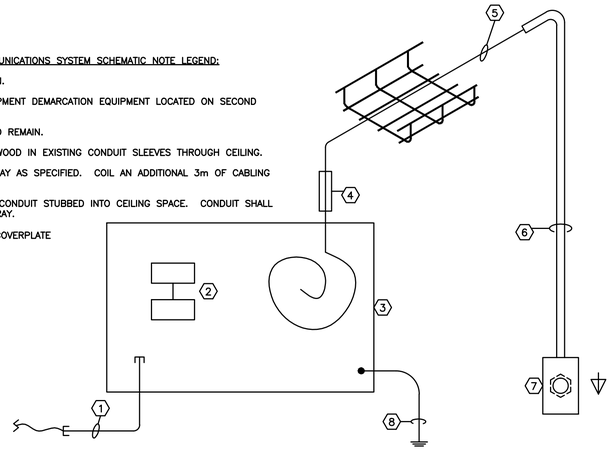

3 / E3.1 CABLE TELEVISION CABLING SCHEMATIC
SCALE NTS

TYPICAL RADIO COMMUNICATIONS SYSTEM SCHEMATIC NOTE LEGEND:

1. EXISTING FLOOR MOUNT RACK IN SECOND FLOOR RADIO ROOM TO REMAIN.
2. TERMINATE NEW OUTLET AT EXISTING PATCH PANEL IN EXISTING RACK.
3. DATA OUTLET IN BOARDROOM 210.02 C/W COVERPLATE IN RECESSED FLOOR POKE THROUGH.
4. DATA COMMUNICATIONS CABLE RUN IN 21mm CONDUIT FROM POKE THROUGH, ON UNDERSIDE OF FIRST FLOOR STRUCTURE TO SECOND RADIO ROOM. CORE FLOOR AND WALLS AS REQUIRED. REFER TO SPECIFICATIONS FOR CABLING AND POKE THROUGH TYPE. COMPLETE CORING AND WORK IN ADJACENT TENANT SPACES BETWEEN THE HOURS OF 5:00PM AND 7:00AM OR ON WEEKENDS. SCHEDULE WORK PRIOR TO BEGINNING WITH DEPARTMENTAL REPRESENTATIVE.
5. PATCH CABLE. PROVIDE 2 PATCH CABLES FOR EVERY DROP INSTALLED. PROVIDE THE FOLLOWING:

LENGTH	QUANTITY
2135mm	1 PER TERMINATED JACKS IN PATCH PANELS. (TYPICAL) – GREEN IN COLOUR
2135mm	1 PER TERMINATED JACKS IN PATCH PANELS. (TYPICAL) – BLUE IN COLOUR

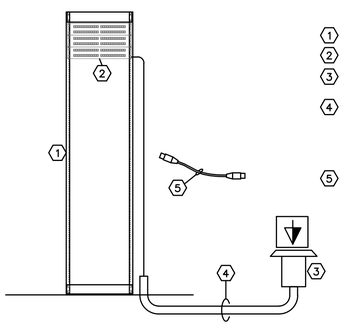

4 / E3.1 TYPICAL RADIO COMMUNICATIONS SYSTEM SCHEMATIC
SCALE NTS

MOUNTING ELEVATION DETAIL NOTES:

DEVICES SHOWN ON THE DRAWINGS AS GROUPED AT A COMMON LOCATION SHALL BE INSTALLED SYMMETRICALLY ABOUT A VERTICAL CENTERLINE. ANY DEVIATION FROM THE MOUNTING ELEVATIONS SHOWN SHALL BE CONFIRMED WITH THE ARCHITECT & ENGINEER PRIOR TO ROUGH IN.

COORDINATE DEVICE INSTALLATION WITH ALL TRADES PRIOR TO ROUGH IN.

REVIEW ARCHITECTURAL ROOM ELEVATION DETAILS PRIOR TO COMMENCING ROUGH IN.

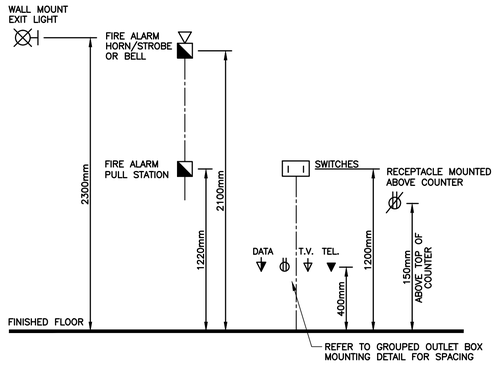

5 / E3.1 TYPICAL MOUNTING ELEVATION DETAIL
SCALE NTS

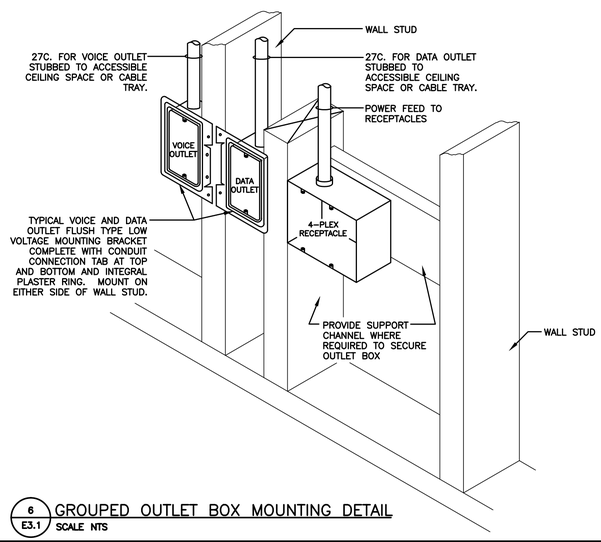

6 / E3.1 GROUPED OUTLET BOX MOUNTING DETAIL
SCALE NTS

PWGSC – A1 – 841X594

0 10 20 30 40 50 60 70 80 90 100mm

Public Works and Government Services Canada / Travaux publics et Services gouvernementaux Canada

REAL PROPERTY SERVICES
Western Region

ASSOCIATION OF PROFESSIONAL ENGINEERS OF SASKATCHEWAN
CERTIFICATE OF AUTHORIZATION
ALFA ENGINEERING LTD.
NUMBER 14
PERMISSION TO CONSULT HELD BY:
DISCIPLINE ELECTRICAL — SASK. REG. No. 6938 — SIGNATURE

PROFESSIONAL ENGINEER
B.C. NOVAK
MEMBER 6438
13 06 26
YR. MN. DAY
SASKATCHEWAN

revisions	description	date

Client
R.050172.002
FOR
PWGSC

project title
OFFICE RENOVATIONS
REGINA, SASKATCHEWAN

approved by
designed by PLJ
drawn by PLJ
PWGSC Project Manager MJ
PWGSC, Architectural and Engineering Resources Manager KD
Client KL
drawing title
DETAILS

project no.	sheet	revision no.
R.050172.001	E3.1	