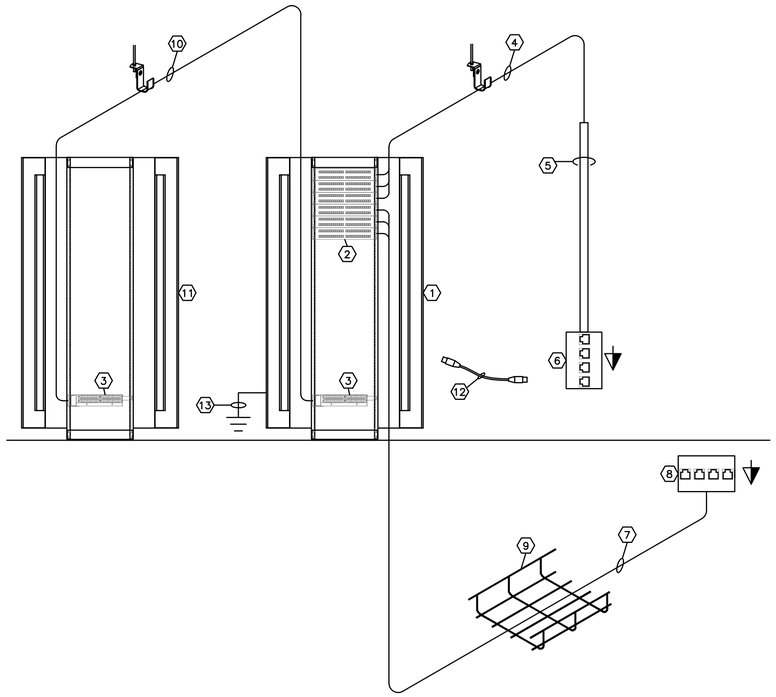


1 / E3.2 TYPICAL MAIN FLOOR DATA COMMUNICATIONS SYSTEM SCHEMATIC
SCALE NTS

TYPICAL MAIN FLOOR DATA COMMUNICATIONS SYSTEM SCHEMATIC NOTE LEGEND:

1. NEW FLOOR MOUNT RACK AS SPECIFIED.
2. PATCH PANEL AS SPECIFIED.
3. RACK MOUNT FIBRE PATCH PANEL AS SPECIFIED.
4. DATA COMMUNICATIONS CABLE AS SPECIFIED. RUN IN CEILING SPACE, LAID NEATLY IN CABLE HOOKS AS SPECIFIED.
5. RUN CABLE TO WALL OUTLET IN CONDUIT STUBBED INTO CEILING SPACE.
6. DATA OUTLET C/W COVERPLATE AS SPECIFIED. PROVIDE QUANTITY OF JACKS IN EACH OUTLET AS INDICATED ON FLOOR PLANS.
7. DATA COMMUNICATIONS CABLE AS SPECIFIED. RUN IN FLOOR SPACE, RUN IN CABLE TRAY AS SPECIFIED.
8. FLOOR MOUNTED DATA OUTLET C/W COVERPLATE AS SPECIFIED, INSTALLED BELOW RAISED FLOOR. PROVIDE QUANTITY OF JACKS IN EACH OUTLET AS INDICATED ON FLOOR PLANS.
9. EXISTING CABLE TRAY IN RAISED FLOOR SYSTEM. PROVIDE NEW LENGTHS OF CABLE TRAY AS NOTED ON DRAWINGS.
10. 12/24 STRAND SINGLE MODE FIBRE OPTIC CABLE AS SPECIFIED. RUN IN 13mm FLEXIBLE, PVC JACKETED, METAL CONDUIT, IN CEILING SPACE BETWEEN FLOOR MOUNT RACKS. LAY CABLE NEATLY IN CABLE HOOKS AS SPECIFIED. RUN FIBRE TO EXISTING FLOOR MOUNT RACK THROUGH ADJACENT TENANT SPACES BETWEEN THE HOURS OF 5:00PM AND 7:00AM OR ON WEEKENDS. SCHEDULE WORK PRIOR TO BEGINNING WITH DEPARTMENTAL REPRESENTATIVE.
11. EXITING FLOOR MOUNT RACK IN ROOM 112.02 TO REMAIN.
12. PATCH CABLE. PROVIDE TWO (2) PATCH CABLES FOR EVERY DROP INSTALLED. PROVIDE THE FOLLOWING:

| LENGTH | QUANTITY |
|---|---|
| 2135mm | 60% PER TERMINATED JACKS IN PATCH PANELS. (TYPICAL) – BLUE IN COLOUR |
| 2135mm | 20% PER TERMINATED JACKS IN PATCH PANELS. (TYPICAL) – ORANGE IN COLOUR |
| 2135mm | 10% PER TERMINATED JACKS IN PATCH PANELS. (TYPICAL) – WHITE IN COLOUR |
| 2135mm | 10% PER TERMINATED JACKS IN PATCH PANELS. (TYPICAL) – GREEN IN COLOUR |
| 3050mm | 50% PER TERMINATED JACKS AT DESKS. (TYPICAL) – GREEN IN COLOUR |
| 3050mm | 50% PER TERMINATED JACKS AT DESKS. (TYPICAL) – BLUE IN COLOUR |

13. #6 TO BUILDING GROUND.

TYPICAL MAIN FLOOR DATA COMMUNICATIONS SYSTEM SCHEMATIC GENERAL NOTES:

ELECTRICAL CONTRACTOR TO REMOVE ALL EXISTING DATA COMMUNICATIONS CABLING BACK TO EXISTING PATCH PANELS AT EXISTING FLOOR MOUNT RACKS. REMOVAL OF CABLING AND OUTLETS MUST BE PERFORMED WHILE DEPARTMENTAL REPRESENTATIVE IS ON SITE TO ENSURE CORRECT CABLING AND OUTLETS ARE REMOVED.

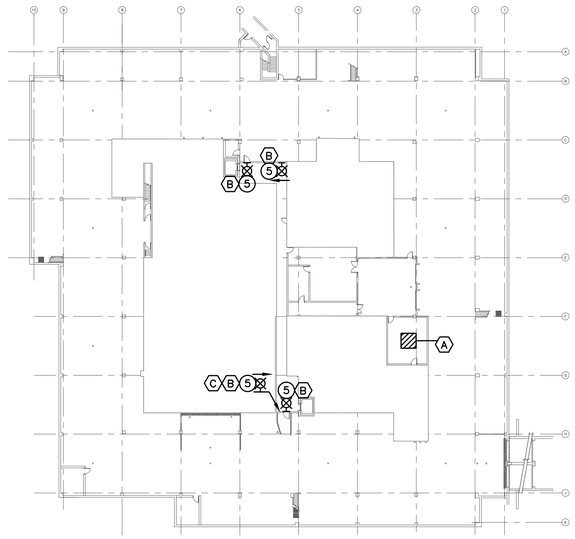


3 / E3.2 BASEMENT FLOOR KEY PLAN
SCALE 1:500

BASEMENT KEY PLAN NOTE LEGEND:

A. EXISTING FLOOR MOUNT RACK IN ROOM 003.08 TO REMAIN. INSTALL NEW RISER CABLE AND PATCH PANELS AS PER TYPICAL MAIN FLOOR VOICE COMMUNICATIONS SYSTEM SCHEMATIC, DETAIL 2/E3.2.
B. CONNECT NEW EXIT LIGHT FIXTURES TO THE EXISTING BASEMENT EMERGENCY POWER EXIT LIGHT CIRCUIT.
C. INSTALL NEW EXIT LIGHT WITH DIRECTIONAL ARROW AT END OF CORRIDOR.

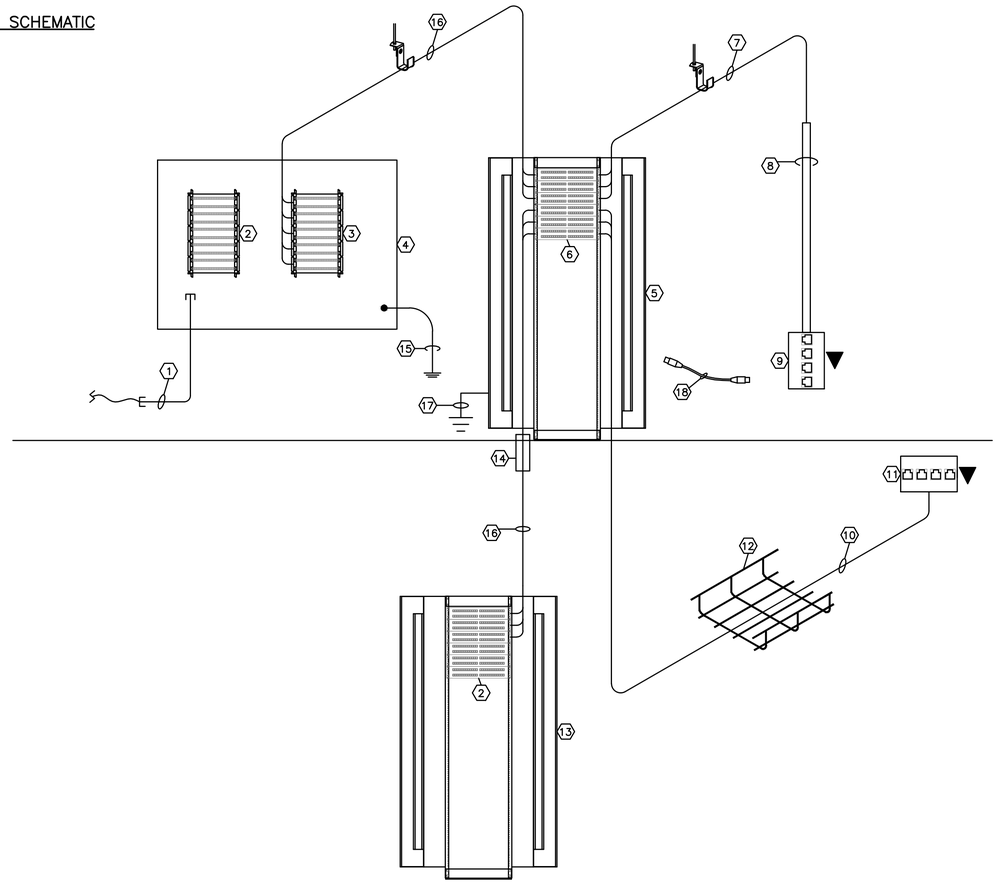


2 / E3.2 TYPICAL MAIN FLOOR VOICE COMMUNICATIONS SYSTEM SCHEMATIC
SCALE NTS

TYPICAL MAIN FLOOR VOICE COMMUNICATIONS SYSTEM SCHEMATIC NOTE LEGEND:

1. EXISTING BUILDING ENTRY CABLE TO REMAIN.
2. EXISTING BUILDING TELEPHONE DEMARCATION EQUIPMENT IN ROOM TO REMAIN.
3. NEW WALL MOUNT IDC/IDC VOICE CONNECTORS AS SPECIFIED.
4. EXISTING EQUIPMENT PLYWOOD IN ROOM 100.21 TO REMAIN.
5. NEW FLOOR MOUNT RACK AS SPECIFIED.
6. PATCH PANEL AS SPECIFIED.
7. VOICE COMMUNICATIONS CABLE AS SPECIFIED. RUN IN CEILING SPACE, LAID NEATLY IN CABLE HOOKS AS SPECIFIED.
8. RUN CABLE TO WALL OUTLET IN CONDUIT STUBBED INTO CEILING SPACE.
9. VOICE OUTLET C/W COVERPLATE AS SPECIFIED. PROVIDE QUANTITY OF JACKS IN EACH OUTLET AS INDICATED ON FLOOR PLANS.
10. VOICE COMMUNICATIONS CABLE AS SPECIFIED. RUN IN FLOOR SPACE, RUN IN CABLE TRAY AS SPECIFIED.
11. FLOOR MOUNTED VOICE OUTLET C/W COVERPLATE AS SPECIFIED, INSTALLED BELOW RAISED FLOOR. PROVIDE QUANTITY OF JACKS IN EACH OUTLET AS INDICATED ON FLOOR PLANS.
12. EXISTING CABLE TRAY IN RAISED FLOOR SYSTEM. PROVIDE NEW LENGTHS OF CABLE TRAY AS NOTED ON DRAWINGS.
13. EXITING FLOOR MOUNT RACK IN ROOM 003.08 TO REMAIN.
14. RUN CABLES BETWEEN FLOORS IN NEW 103mm CONDUIT SLEEVE THROUGH CONCRETE FLOOR.
15. EXISTING GROUND TO REMAIN.
16. 100 PAIR INSIDE RISER CABLE IN 53mm CONDUIT AS SPECIFIED.
17. #6 TO BUILDING GROUND.
18. PATCH CABLE. PROVIDE TWO (2) PATCH CABLE FOR EVERY DROP INSTALLED. PROVIDE THE FOLLOWING:

| LENGTH | QUANTITY |
|---|---|
| 2135mm | 100% PER TERMINATED JACKS IN PATCH PANELS. (TYPICAL) – WHITE IN COLOUR |
| 3050mm | 90% PER TERMINATED JACKS AT DESKS. (TYPICAL) – WHITE IN COLOUR |
| 3050mm | 10% PER TERMINATED JACKS AT DESKS. (TYPICAL) – ORANGE IN COLOUR |

TYPICAL MAIN FLOOR VOICE COMMUNICATIONS SYSTEM SCHEMATIC GENERAL NOTES:

ELECTRICAL CONTRACTOR TO REMOVE ALL EXISTING VOICE COMMUNICATIONS CABLING AND RISER CABLES BACK TO EXISTING BICS BLOCKS AT EQUIPMENT PLYWOODS AND PATCH PANELS AT EXISTING FLOOR MOUNT RACKS. REMOVAL OF CABLING, OUTLETS AND RECONFIGURATION OF EXISTING PATCH PANELS MUST BE PERFORMED WHILE DEPARTMENTAL REPRESENTATIVE IS ON SITE TO ENSURE CORRECT CABLING AND OUTLETS ARE REMOVED AND RECONFIGURED. REMOVE ALL EXISTING VOICE CONNECTORS AND CABLING ON EQUIPMENT PLYWOOD IN ROOM 102.02.

Public Works and Government Services Canada / Travaux publics et Services gouvernementaux Canada

REAL PROPERTY SERVICES
Western Region

ASSOCIATION OF PROFESSIONAL ENGINEERS OF SASKATCHEWAN
CERTIFICATE OF AUTHORIZATION
ALFA ENGINEERING LTD.
NUMBER 14
PERMISSION TO CONSULT HELD BY:
DISCIPLINE ELECTRICAL — SASK. REG. No. 6938 — SIGNATURE

PROFESSIONAL ENGINEER
B.C. NOVAK
MEMBER 6438
13 06 26
YR. MN. DAY
SASKATCHEWAN

| revisions | description | date |
|---|---|---|
| | | |

Client
R.050172.002
FOR
PWGSC

project title
OFFICE RENOVATIONS
REGINA, SASKATCHEWAN

approved by
designed by PLJ
drawn by PLJ
PWGSC Project Manager MJ
PWGSC, Architectural and Engineering Resources Manager KD
Client KL

drawing title
MAIN FLOOR COMMUNICATIONS DETAILS

| project no. | sheet | revision no. |
|---|---|---|
| R.050172.001 | E3.2 | |

PWGSC – A1 – 841X594

0 10 20 30 40 50 60 70 80 90 100mm