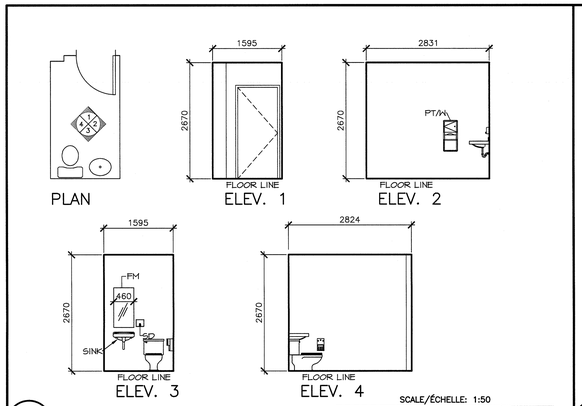

1 A101/A702 ROOM ENLARGEMENT ROOM 115

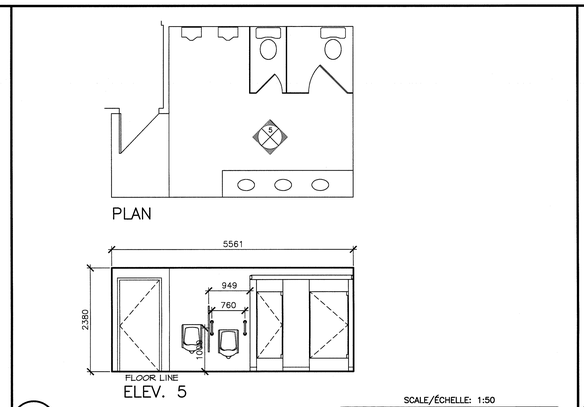

2 A101/A702 ROOM ENLARGEMENT ROOM 118

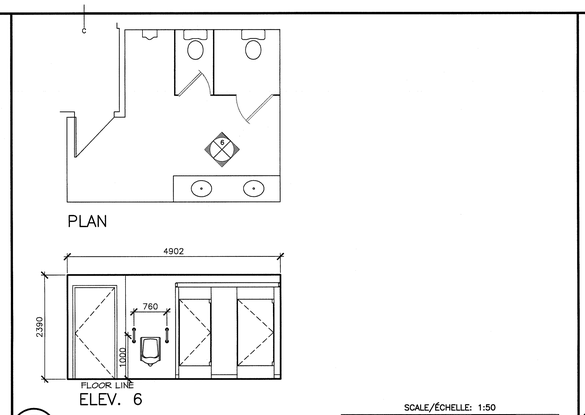

3 A102/A702 ROOM ENLARGEMENT ROOM 312

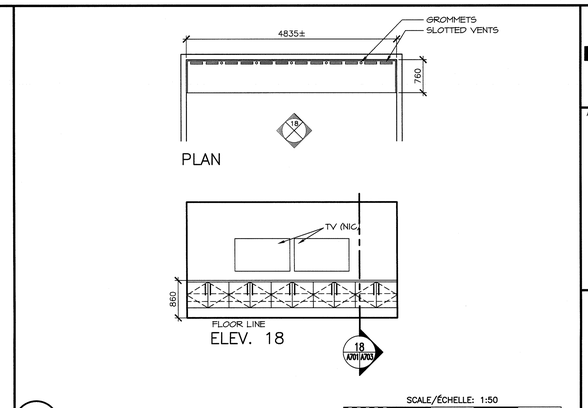

4 A101/A702 MILLWORK ROOM 143

ALL EXPOSED SURFACES TO BE PLASTIC LAMINATE.

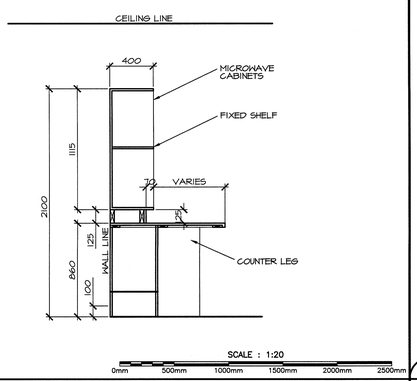

5 A701/A702 MILLWORK SECTION

ALL EXPOSED SURFACES TO BE PLASTIC LAMINATE.

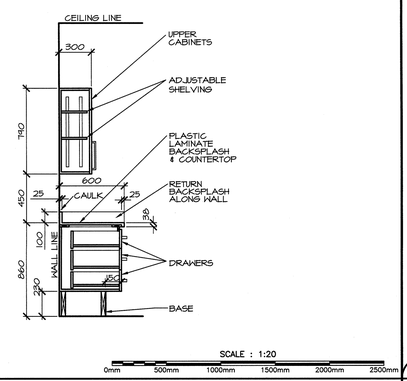

6 A701/A702 MILLWORK SECTION

ALL EXPOSED SURFACES TO BE PLASTIC LAMINATE.

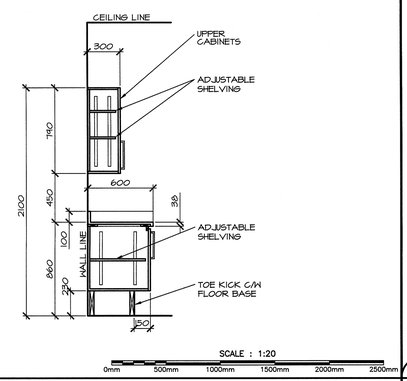

7 A701/A702 MILLWORK SECTION

ALL EXPOSED SURFACES TO BE PLASTIC LAMINATE.

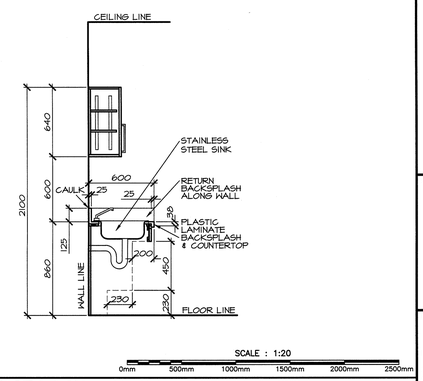

8 A701/A702 MILLWORK SECTION

ALL EXPOSED SURFACES TO BE PLASTIC LAMINATE.

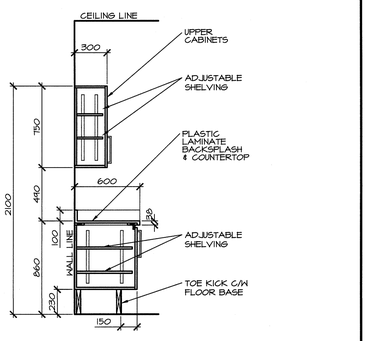

9 A701/A702 MILLWORK SECTION

ALL EXPOSED SURFACES TO BE PLASTIC LAMINATE.

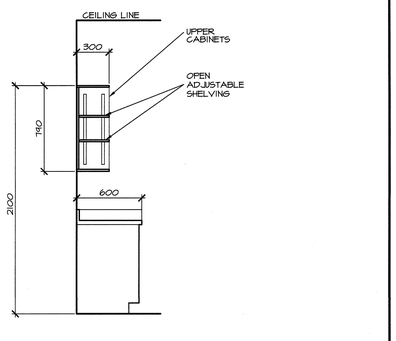

10 A701/A702 MILLWORK SECTION

ALL EXPOSED SURFACES TO BE PLASTIC LAMINATE.

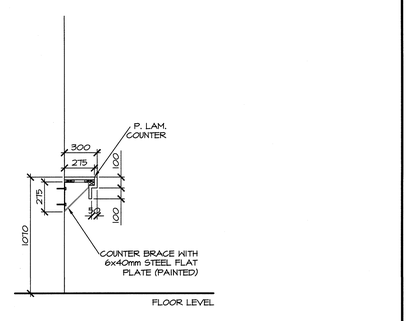

11 A701/A702 MILLWORK SECTION

ALL EXPOSED SURFACES TO BE PLASTIC LAMINATE.

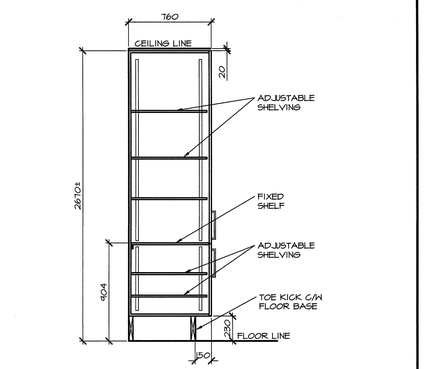

12 A701/A702 MILLWORK SECTION

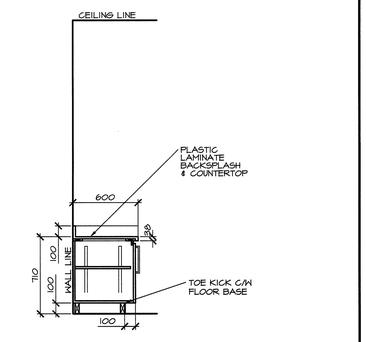

13 A701/A702 MILLWORK SECTION

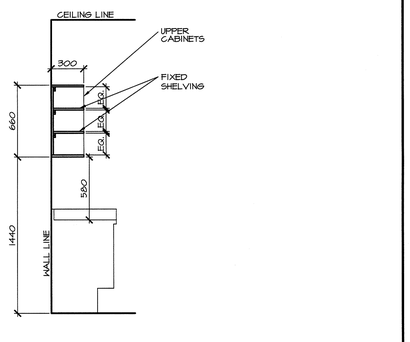

14 A701/A702 MILLWORK SECTION

ALL EXPOSED SURFACES TO BE PLASTIC LAMINATE.

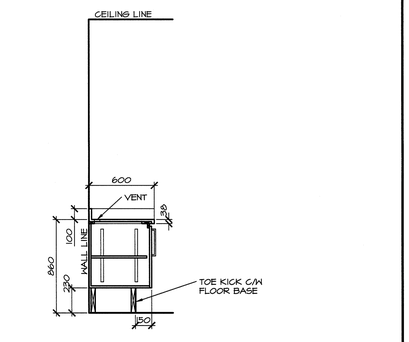

15 A701/A702 MILLWORK SECTION

ALL EXPOSED SURFACES TO BE PLASTIC LAMINATE.

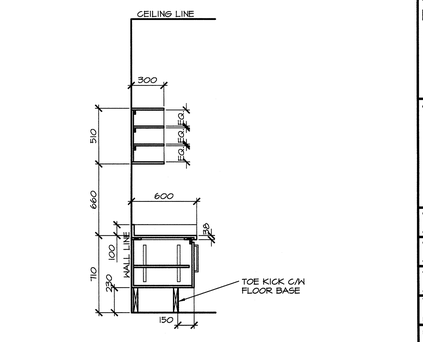

16 A701/A702 MILLWORK SECTION

Public Works and Government Services Canada / Travaux Publics et Services gouvernementaux Canada

Architects / Architectes

architecture 2000 inc.

Key plan / Plan de localisation

Seal / Sceau

92001 CERTIFICATE of PRACTICE — Robert J. MacDonald — July 17, 2013 — ARCHITECTURE 2000 INC. — ARCHITECTS ASSOCIATION OF NEW BRUNSWICK

Note / Note

GENERAL NOTES

1. DO NOT SCALE DRAWINGS.
2. ALL DIMENSIONS ARE TO BE VERIFIED ON SITE .
3. VERIFY ALL EXISTING CONSTRUCTION ON SITE THAT ARE TO REMAIN.
4. BRING ALL OMISSIONS AND DISCREPANCIES, INCLUDING DIMENSIONS TO THE ATTENTION OF THE ARCHITECT PRIOR TO COMMENCEMENT OF ANY WORK.
5. THE ARCHITECT IS NOT RESPONSIBLE FOR THE CONTRACTOR'S MEANS, METHODS AND OR TECHNIQUES IN THE CONSTRUCTION OF THIS FACILITY.
6. ALL WORK SHALL BE PERFORMED IN ACCORDANCE WITH NATIONAL BUILDING CODE AND ALL LOCAL AND PROVINCIAL BY LAWS.
7. ALL WORK SHALL BE PERFORMED BY QUALIFIED PERSONS AND WORKMANSHIP SHALL BE TO THE OWNER'S AND ARCHITECT'S SATISFACTION.
8. GENERAL CONTRACTOR SHALL PROTECT WORK AND OWNER'S PROPERTY FROM DAMAGE THAT MAY ARISE AS A RESULT OF THIS CONTRACT. MAKE GOOD ANY DAMAGES DUE TO THIS CONSTRUCTION.
9. CONTRACTOR IS RESPONSIBLE FOR CUTTING AND PATCHING AS REQUIRED BY HIS SUBTRADE. HE IS RESPONSIBLE TO MAKE GOOD ALL TRADES.

revisions / revisions		date
00	ISSUED FOR TENDER	07-17 2013

project / projet: BUILDING MODERNIZATION PHASE II, 10 Weldon Street, Shediac, NB

drawing / dessin: MILLWORK DETAILS

designed / conçu: RJM
date: APRIL 2013
drawn / dessiné: HGA
date: APRIL 2013
approved / approuvé: XXX
date: APRIL 2013
Tender / Soumission: 2013/08/13
PWGSC Project Manager / Administrateur de projets TPSGC

project number / no. du projet: R.039554.001

drawing no. / no. du dessin: A-702

PWGSC AO (2004)

E-DRM/GDD-E: 384039 Version 1