STANDARD MECHANICAL SPECIFICATIONS

1. GENERAL

1.1 PROVIDE A COMPLETE AND FULLY OPERATIONAL MECHANICAL SYSTEM WITH FACILITIES AND SERVICES TO MEET REQUIREMENTS DESCRIBED IN THESE DRAWINGS AND SPECIFICATIONS. THE DRAWINGS AND SPECIFICATIONS ARE COMPLIMENTARY EACH TO THE OTHER. ANYTHING CALLED FOR IN THE SPECIFICATIONS AND NOT SHOWN ON THE DRAWINGS, OR SHOWN ON THE DRAWINGS AND NOT CALLED FOR IN THE SPECIFICATIONS, MUST BE CONSIDERED AS APPEARING IN BOTH AND MUST BE FURNISHED AND INSTALLED BY THE CONTRACTOR.

1.2 MECHANICAL INSTALLATION SHALL COMPLY WITH ALL APPLICABLE CODES AND BYLAWS, AND THE REQUIREMENTS OF ALL AUTHORITIES HAVING JURISDICTION.

1.3 GIVE ALL NECESSARY NOTICES, OBTAIN ALL NECESSARY PERMITS, AND PAY ALL FEES IN ORDER THAT THE WORK HEREINAFTER SPECIFIED MAY BE INSTALLED CONFORMING TO THE LAWS AND REGULATIONS OF ALL AUTHORITIES HAVING JURISDICTION BEFORE FINAL ACCEPTANCE CERTIFICATES ARE ISSUED.

1.4 DESIGN, DRAWINGS, AND SPECIFICATIONS ARE BASED ON BEST AVAILABLE AS-BUILT INFORMATION PROVIDED, WHICH MAY OR MAY NOT BE 100% ACCURATE. ANY DISCREPANCIES FOUND BETWEEN WHAT IS SHOWN ON THE DRAWINGS AND IN THESE SPECIFICATIONS AS EXISTING, AND WHAT IS FOUND ON SITE IS TO BE REPORTED TO THE CONSULTANT IMMEDIATELY.

1.5 UNLESS SPECIFICALLY NOTED OTHERWISE, ALL MATERIAL, EQUIPMENT, AND SYSTEMS ARE TO BE NEW AND FREE FROM DEFECTS.

1.6 PRIOR TO SUBMITTING BID: EXAMINE THE SITE AND THE LOCAL CONDITIONS AFFECTING WORK OF THIS CONTRACT. EXAMINE THE MECHANICAL, ELECTRICAL, STRUCTURAL, AND ARCHITECTURAL DRAWINGS AND BE SATISFIED THAT THE WORK CAN BE SATISFACTORILY CARRIED OUT AS SHOWN ON THESE PLANS WITHOUT CHANGES TO THE BUILDING.

1.7 BEFORE COMMENCING THE WORK, EXAMINE THE WORK OF THE OTHER TRADES AND REPORT AT ONCE ANY DEFECT OR INTERFERENCE AFFECTING THE WORK, OR THE GUARANTEE OF THIS WORK. IN ADDITION, PRIOR TO STARTING ANY WORK THE CONTRACTOR IS TO REVIEW TYPE, SIZE, AND LOCATION OF ALL EXISTING MECHANICAL ON SITE WITH THAT SHOWN ON THE DRAWINGS AS EXISTING. REVIEW ANY DISCREPANCIES WITH THE CONSULTANT PRIOR TO STARTING ANY WORK.

1.8 ALL MECHANICAL EQUIPMENT INSTALLATIONS SHALL BE IN ACCORDANCE WITH MANUFACTURERS' PRINTED INSTRUCTIONS.

1.9 ALL INSTALLATIONS ARE SUBJECT TO REVIEW AND APPROVAL BY THE CONSULTANT PRIOR TO ACCEPTANCE.

1.10 THE USE OF TRADE NAMES IN SPECIFICATIONS AND ON DRAWINGS SHALL CONSTITUTE A BASIS UPON WHICH EQUALS CAN BE ESTABLISHED. SUBSTITUTION WILL BE ALLOWED, BUT ONLY BY WRITTEN PERMISSION FROM THE CONSULTANT. FURTHER, WHEREVER A TRADE NAME IS STATED, THE WORK SHALL BE EXECUTED IN ACCORDANCE WITH MANUFACTURER'S INSTRUCTIONS.

1.11 RECORD DRAWINGS : KEEP IN THE JOB OFFICE AN EXTRA SET OF WHITE PRINTS AND SPECIFICATIONS PROVIDED BY THE CONSULTANT, ON WHICH SHALL BE MARKED AS WORK PROGRESSES, ALL CHANGES AND DEVIATIONS IN RUNS OF PIPING, DUCTWORK, OR LOCATION OF EQUIPMENT. THESE RECORD DRAWINGS SHALL BE GIVEN TO THE CONSULTANT ON COMPLETION OF THE JOB.

1.12 SHOP DRAWINGS : SUBMIT EIGHT (8) COPIES OF SHOP DRAWINGS OF ALL MAJOR EQUIPMENT AND PLUMBING FIXTURES TO THE CONSULTANT FOR REVIEW BEFORE ORDERING.

1.13 AT PROJECT COMPLETION PROVIDE TO THE CONSULTANT FOR REVIEW: CONTRACTOR'S MARKED-UP RECORD (AS-BUILT) DRAWINGS, TEST RESULTS, AND MAINTENANCE MANUALS INCLUDING SHOP DRAWINGS AND MAINTENANCE INFORMATION FOR ALL EQUIPMENT AND SYSTEMS.

1.14 REGULAR OPERATION OF THE EXISTING BUILDING IS TO BE MAINTAINED. WHEN ANY SERVICES ARE TO BE INTERRUPTED FOR CHANGEOVER MAKE NECESSARY ARRANGEMENTS WITH THE BUILDING MANAGER.

1.15 ACCESS DOORS : FURNISH AND INSTALL ACCESS COVERS AND ACCESS DOORS FOR NEW MECHANICAL EQUIPMENT, SHOWN ON THE DRAWINGS, WHICH MAY REQUIRE SERVICING. ACCESS DOORS SHALL BE J. R. SMITH 4160 SERIES, 300mm X 450mm (12"x18"), UNLESS SPECIFICALLY NOTED OTHERWISE.

1.16 MAINTENANCE AND OPERATING MANUALS : PREPARE AND ASSEMBLE FOUR (4) COPIES OF HARD COVER MANUALS ENTITLED "CARE AND OPERATION OF THE MECHANICAL SYSTEMS". ALL OF THE ABOVE DOCUMENTS SHALL BE SUBMITTED TO THE CONSULTANT FOR APPROVAL PRIOR TO BEING TURNED OVER TO THE OWNER.

1.17 THE CONTRACTOR WILL BE RESPONSIBLE FOR ALL TEMPORARY HEAT. MAKE ALL ARRANGEMENTS AND PAY ALL COSTS FOR FUEL, MAINTENANCE OF EQUIPMENT, TEMPORARY FILTERS, REPAIRS OR REPLACEMENT OF PARTS.

1.18 OWNER'S INSTRUCTIONS : THE CONTRACTOR SHALL INSTRUCT AND PROVIDE OPERATING AND MAINTENANCE INSTRUCTIONS TO THE BUILDING MAINTENANCE STAFF REGARDING ALL NEW EQUIPMENT, MATERIALS, AND SYSTEMS.

1.19 AFTER THE BUILDING IS COMPLETED AND ACCEPTED, GIVE TO OWNERS A ONE YEAR WRITTEN GUARANTEE AGAINST DEFECTS IN EQUIPMENT AND/OR MATERIALS AND WORKMANSHIP, EXCEPT WHERE SUCH DEFECTS ARE DUE TO THE OWNER'S MISUSE. THIS GUARANTEE WILL NOT CANCEL LONGER WARRANTIES.

1.20 TESTING : TEST AS REQUIRED BY THE AUTHORITY HAVING JURISDICTION, AND AS OTHERWISE DESCRIBED HEREIN.

1.21 CUTTING AND PATCHING : ALL CUTTING, DRILLING AND PATCHING REQUIRED TO INSTALL MECHANICAL, SHALL BE THE RESPONSIBILITY OF THE MECHANICAL CONTRACTOR. ALL PATCHING SHALL MATCH EXISTING FINISHES. THE MECHANICAL CONTRACTOR SHALL ACCURATELY LOCATE OPENINGS REQUIRED FOR HIS WORK AND OBTAIN APPROVAL PRIOR TO CUTTING OR DRILLING. ALL OPENINGS THROUGH FIRE WALLS SHALL BE FILLED WITH APPROVED FIRE RESISTANT MATERIALS.

1.22 PAINTING OF MECHANICAL AND ASSOCIATED FINISHES NOTED ON THE MECHANICAL DRAWINGS SHALL BE THE RESPONSIBILITY OF THE MECHANICAL CONTRACTOR. IF A PAINTING CONTRACTOR IS PRESENT THE MECHANICAL CONTRACTOR SHALL COORDINATE PAINTING FINISHES WITH THE PAINTING CONTRACTOR. ALL COLORS SHALL BE APPROVED WITH THE ARCHITECT OR CONSULTANT.

1.23 HANGARS: ALL HANGERS SHALL BE SUBSTANTIAL HANGERS DRILLED FOR HANGING FROM THE BUILDING STRUCTURE. NO PERFORATED COPPER OR IRON HANGERS WILL BE ACCEPTED. HANGARS SHALL BE SPACED AS PER MANUFACTURERS' PRINTED INSTRUCTIONS, BUT NOT OVER THREE METERS APART AND SHALL BE OF SUCH CONSTRUCTION AS TO ALLOW FOR MOVEMENT OF PIPING AND DUCTWORK DUE TO EXPANSION. FOR INSULATED PIPES, USE NIBCO FIGURE 220 PROTECTION SADDLE. HANGER SHALL SUSPEND PIPE FROM OUTSIDE OF INSULATION, AND NOT DIRECTLY FROM THE PIPE ITSELF. PROVIDE COPPER PLATE FINISH OR PVC COATED HANGERS FOR ALL NON-INSULATED COPPER PIPES. SUPPORT DUCTWORK AS PER SMACNA STANDARDS.

2. PLUMBING

2.1 PIPE AND PIPE FITTINGS AS FOLLOWS:

PIPE:	FITTINGS:
COPPER DWV	50-50 SOLDER
PLASTIC ABS-DWV OR PVC-DWV	PLASTIC C/W SOLVENT WELD JOINTS - PERMITTED BURRIED BELOW GRADE ONLY
COPPER TYPE L	95-5 SOLDER
CROSS LINKED POLYETHYLN (PEX)	AS PER MANUFACTURERS INSTRUCTIONS

3. CONTROLS

3.1 ALL CONTROLS FOR THE MECHANICAL SYSTEM ARE THE RESPONSIBILITY OF THE MECHANICAL CONTRACTOR. PROVIDE NEW WIRING/TUBING, RELAYS, TRANSFORMERS, AND THERMOSTATS AS NECESSARY TO CONNECT TO EXISTING OR NEW CONTROLLING OR CONTROLLED DEVICES. NEW THERMOSTATS TO MATCH EXISTING. INTERLOCK NEW CONTROLS WITH THE BUILDING'S EXISTING DDC CONTROL SYSTEM. UPDATE SYSTEM PROGRAMING AND GRAPHICS AS REQUIRED.

3.2 INTERLOCK NE TANK LEVEL CONTROLS WITH EXISTING BUILDING DIGITAL CONTROL SYSTEM. CONFIRM ALL LEVEL CONTROL SYSTEM POINTS WITH LEVEL CONTROL SUPPLIER PRIOR TO START OF CONSTRUCTION. PROVIDE ALL POINTS AVAILABLE IN A GRAPHIC INTERFAE IN THE EXISTING BUILDING DIGITAL CONTROL SYSTEM.

3.3 ACCEPTABLE CONTROLS SYSTEMS, ANDOVER

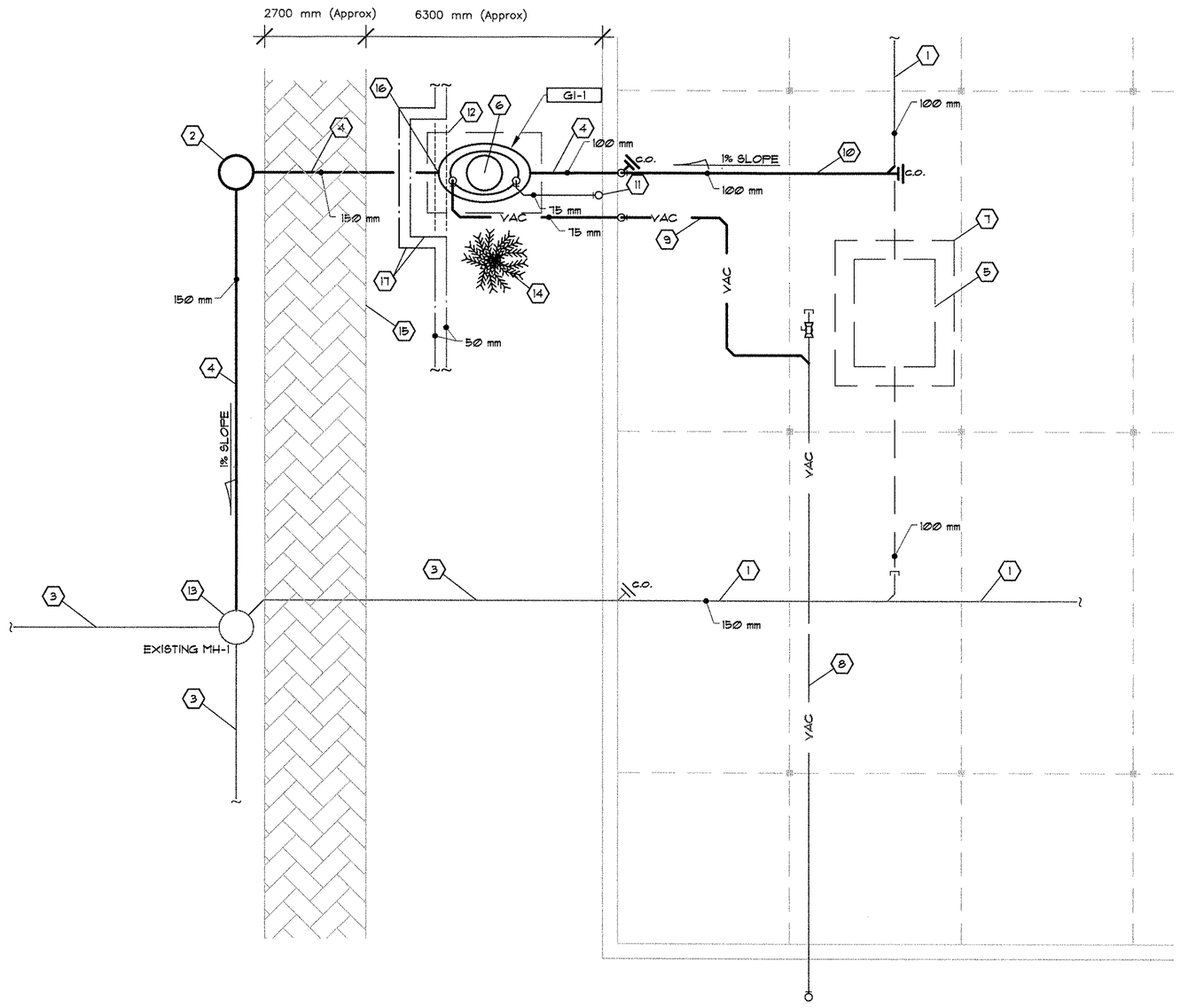

NORTH

1 / M-1 PARTIAL SITE/CRAWLSPACE PLAN - MECHANICAL
SCALE: 1:100

PLUMBING EQUIPMENT SCHEDULE

GI-1	GREENTURTLE MODEL GMC-1500 FIBERGLASS HOLDING TANK TO ALLOW FOR 1135 LITERS (1500 GAL) WET STORAGE CAPACITY. 819 GAL GREASE CAPACITY TANK TO BE CONSTRUCTED WITH FIBERGLASS REINFORCED PLASTIC 6mm (1/4") THICK WALL THICKNESS, UNIT C/W FACTORY REINFORCED TOP MANHOLE, EXTENSION COLLAR, MANHOLE COVER c/w INSULATION, REMOTE PUMPOUT PIPE ASSEMBLY, AND HIGH LIQUID LEVEL ALARM c/w INDOOR CONTROL PANEL (WALL MOUNTED). INTERLOCK TANK LEVEL ALARM WITH EXISTING BUILDING AUTOMATED CONTROL SYSTEM.

GENERAL NOTES

1. ALL NEW SANITARY PIPING TO HAVE A MINIMUM OF 2100 mm OF COVER.
2. CONFIRM ALL INVERT ELEVATIONS ON SITE PRIOR TO START OF CONSTRUCTION.
3. PATCH AND REPAIR ALL LAWNS AND PAVING STONE WALKWAY WHERE DISTURBED BY EXCAVATING IN THIS CONTRACT. PATCH AND REPAIR TO MATCH EXISTING.

NOTE LEGEND

1. EXISTING SANITARY PIPE TO REMAIN IN CRAWLSPACE.
2. NEW MANHOLE ASSEMBLY UNIT. EXTEND NEW SANITARY AS SHOWN. REFER TO 2/M-1 FOR DETAIL.
3. EXISTING SANITARY PIPING BELOW GRADE TO REMAIN.
4. NEW 100 mm SANITARY PIPE BELOW GRADE TO BE INSTALLED AS SHOWN. CONFIRM INVERT ON SITE.
5. EXISTING GREASE INTERCEPTOR LOCATED IN CRAWLSPACE. CAP INTAKE AND DISCHARGE PIPE AND REMOVE TANK AND ABANDON PIPING FROM SITE.
6. NEW GREASE INTERCEPTOR TO BE INSTALLED BELOW GRADE IN GRASSED AREA AS SHOWN. CONFIRM EXACT LOCATION AND ELEVATION ON SITE PRIOR TO START OF CONSTRUCTION. INSTALL AS PER MANUFACTURERS INSTRUCTION. EXTEND SANITARY INTAKE AND DISCHARGE PIPING, VENT PIPING AND REMOTE VACUUM SUCTION PIPE FROM TANK AS SHOWN. SIZES AS NOTED.
7. EXISTING GREASE TRAP CONTAINMENT PIT TO REMAIN.
8. EXISTING VACUUM, SUCTION PIPE LOCATED IN CRAWLSPACE TO REMAIN c/w ISOLATION VALVE AND COUPLING ASSEMBLY.
9. EXTEND NEW VACUUM SUCTION PIPE FROM EXISTING VACUUM SUCTION PIPE IN CRAWLSPACE.
10. EXTEND NEW SANITARY PIPE IN CRAWLSPACE FROM EXISTING SANITARY PIPE UPSTREAM OF ABANDONED GREASE INTERCEPTOR UNIT. EXTEND THROUGH FOUNDATION WALL c/w CLEANOUT.
11. EXTEND 75 mm COPPER VENT PIPE UP BESIDE FOUNDATION WALL. EXTEND UP AT EXTERIOR WALL AND TERMINATE WITH VENT CAP ABOVE ROOF PARAPET AS PER CODE. PROVIDE STEEL PIPE ENCLOSURE TO PROTECT VENT PIPE FROM BEING STRUCK BY LANDSCAPING EQUIPMENT.
12. LINE DENOTES MINIMUM 450 mm THICK CONCRETE ANTI-BUOYANCY SLAB. A MINIMUM OF 300 mm AROUND TANK. PROVIDE 150 mm THICK LAYER OF SELF DRAINING PEA GRAVEL. INSTALL AS PER MANUFACTURERS INSTRUCTIONS.
13. EXISTING MANHOLE TO REMAIN.
14. EXISTING TREE TO BE REMOVED, DO NOT REPLACE.
15. HATCHING DENOTES LOCATION OF EXISTING PAVING STONE WALKWAY AT GRADE. PATCH AND REPAIR TO MATCH EXISTING AFTER EXCAVATION IS COMPLETE.
16. EXTEND 100 mm SANITARY DISCHARGE FROM GI-1 AND CONNECT TO NEW 150 mm SANITARY PIPE AS SHOWN.
17. REMOVE EXISITNG LAWN IRRIGATION SPRINKLER MAINS, SPRINKLER BRANCH PIPING, AND SPRINKLER HEADS FROM TANK EXCAVATION AREA. RE-INSTALL EXISTING SPRINKLER MAINS, BRANCH PIPING AND SPRINKLER HEADS AROUND NEW TANK LOCATION TO ALLLOW FOR FUTURE TANK REMOVAL WITHOUT DISRUPTING SPRINKLER SYSTEM. LAWN IRRIGATION SPRINKLER SYSTEM TO MATCH EXISTING AFTER EXCAVATION.

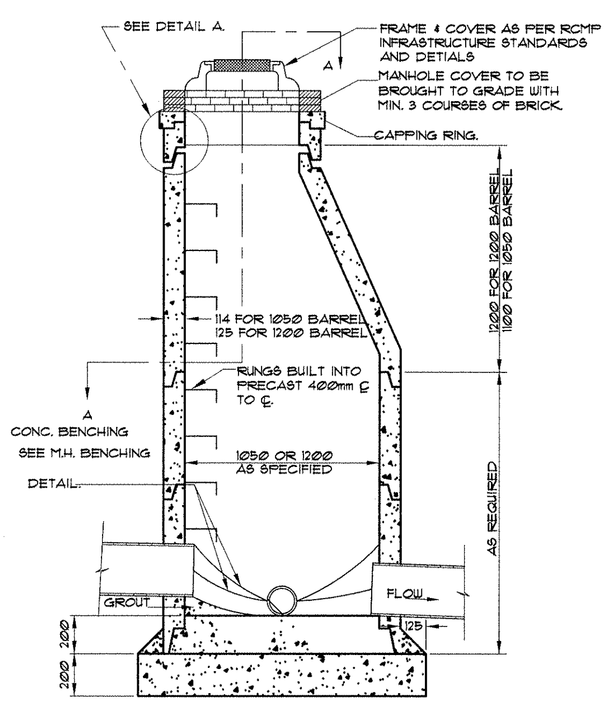

SECTION B-B
N.T.S.

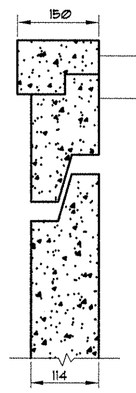

DETAIL "A"
N.T.S.

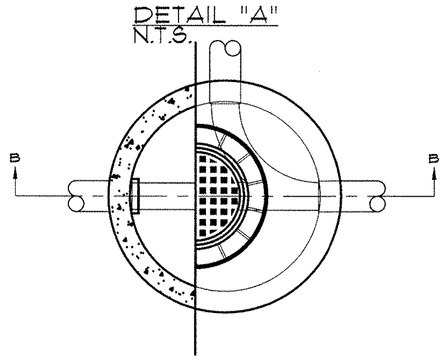

PLAN THROUGH A-A
N.T.S.

2 / M-1 PRECAST CONCRETE MANHOLE
NOT TO SCALE

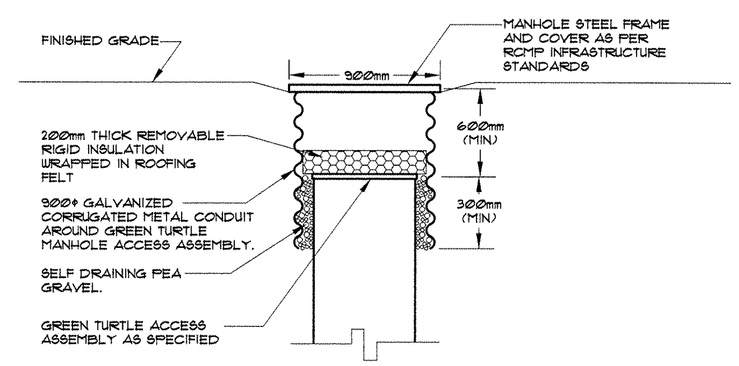

3 / M-1 GREASE INTERCEPTOR ACCESS ASSEMBLY DETAIL
NOT TO SCALE

Mechanical design group
100 - 2330 15th Avenue, Regina, SK Canada S4P 1A2
phone : (306) 777-0123
fax : (306) 525-6780
Project Contact: JOHN YANNITSOS

Association of Professional Engineers & Geoscientists of Saskatchewan
CERTIFICATE OF AUTHORIZATION
Regina Mechanical Design Group
Number C1553
Permission to Consult held by:

Discipline	Sk. Reg. No.	Signature
MECH	15963	

ENGINEERING LICENSEE
J. YANNITSOS
MEMBER 15963
13 07 05
YR. MN. DAY
SASKATCHEWAN

Revisions: No.	Date:	By:	Description:

Client:
ROYAL CANADIAN MOUNTED POLICE

FOOD SERVICES BUILDING NEW GREASE INTERCEPTOR
Regina, Saskatchewan

MECHANICAL

File : 13-060	Drawing Number:
Date 2013-03-05	M-1
Scale : AS NOTED	
Drawn : P.S.	
Checked : J.Y.	Rev: 0 Dwg 1 of 1