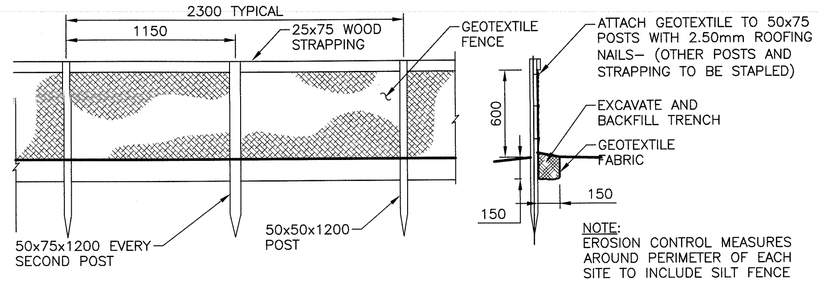

SEDIMENT CONTROL FENCE (1/–)

SCALE: 1:25

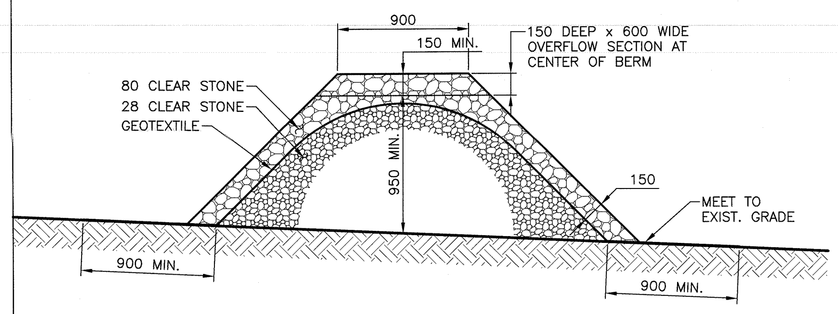

SEDIMENT CONTROL BERM (2/–)

SCALE: 1:25

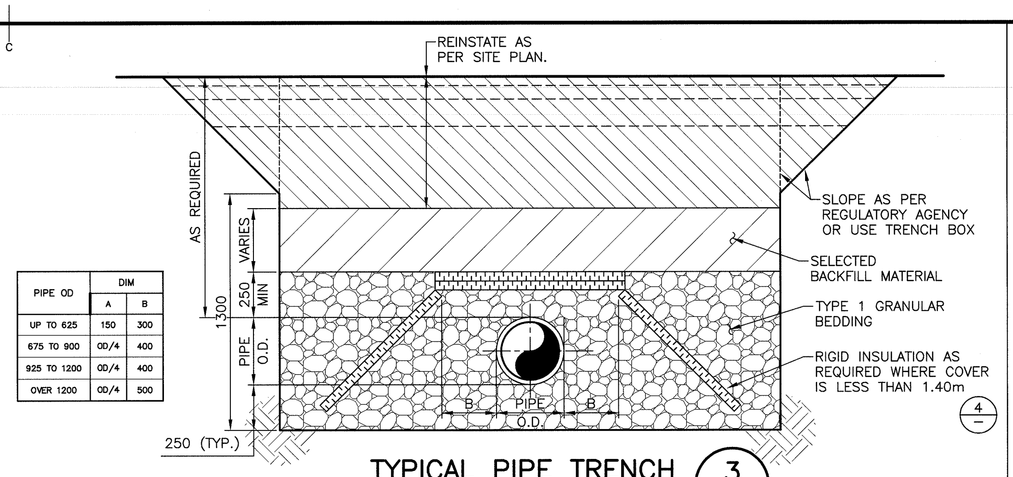

PIPE OD	DIM A	DIM B
UP TO 625	150	300
675 TO 900	OD/4	400
925 TO 1200	OD/4	400
OVER 1200	OD/4	500

TYPICAL PIPE TRENCH (3/C2)

SCALE : 1:20

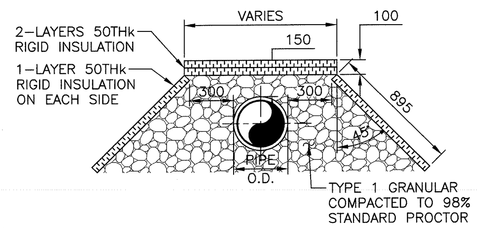

PIPE INSULATION (4/–)

SCALE: 1:25

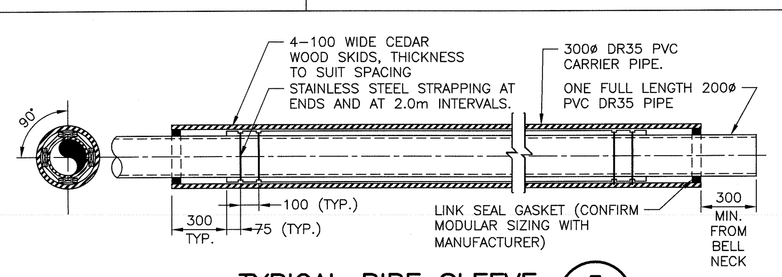

TYPICAL PIPE SLEEVE (5/–)

SCALE : 1:20

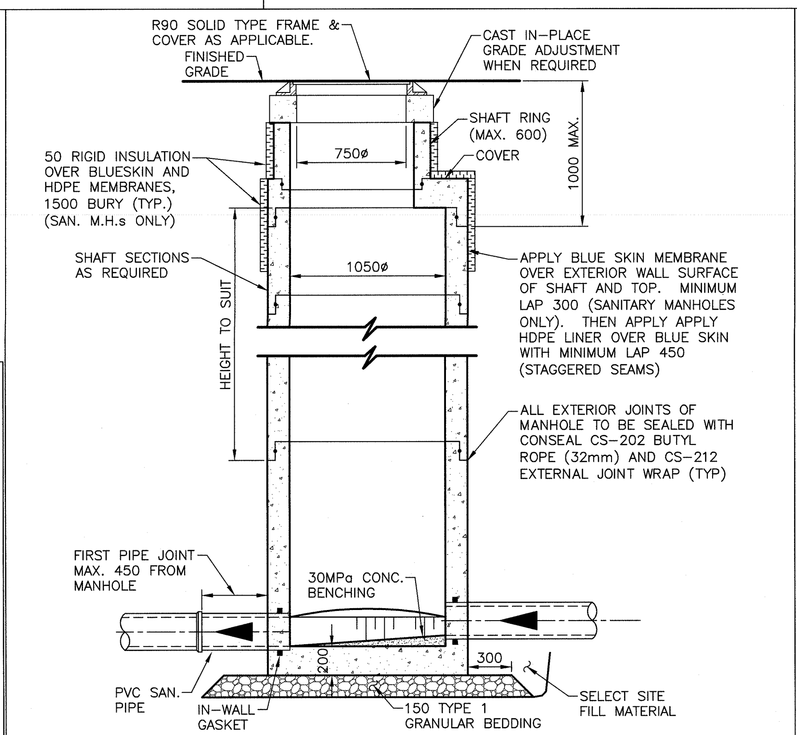

PRECAST SANITARY MANHOLE (7/C2)

SCALE: 1:25

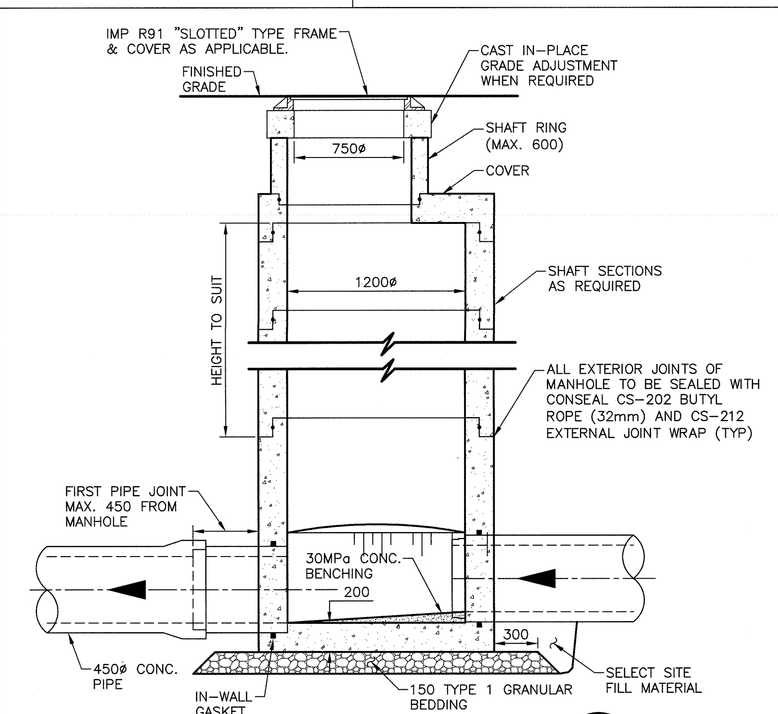

PRECAST STORM MANHOLE (8/C2)

SCALE: 1:25

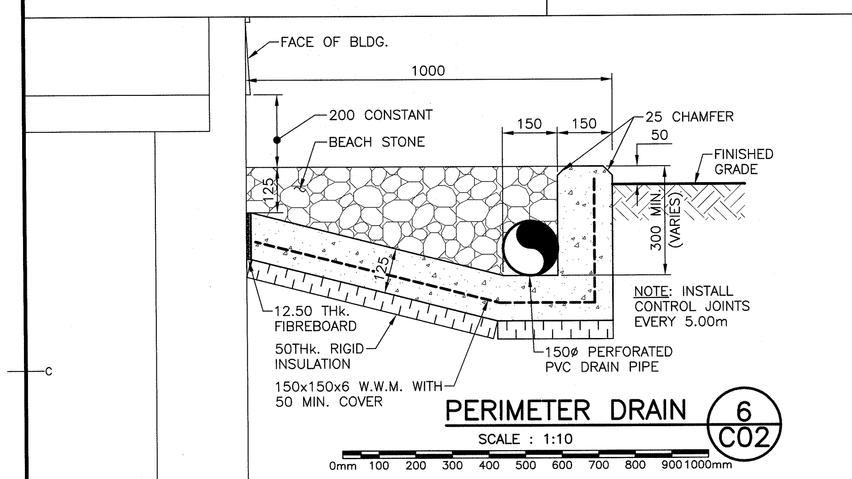

PERIMETER DRAIN (6/C02)

SCALE : 1:10

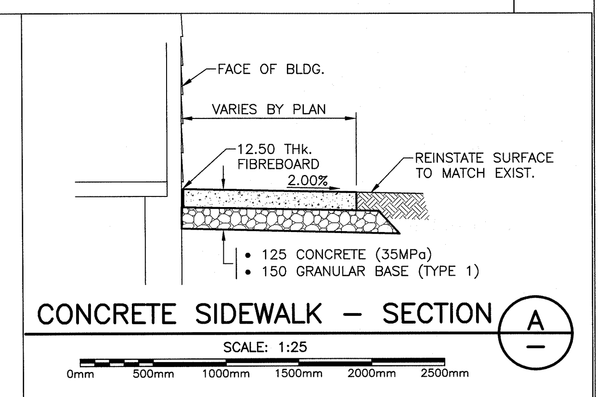

CONCRETE SIDEWALK – SECTION (A/–)

SCALE: 1:25

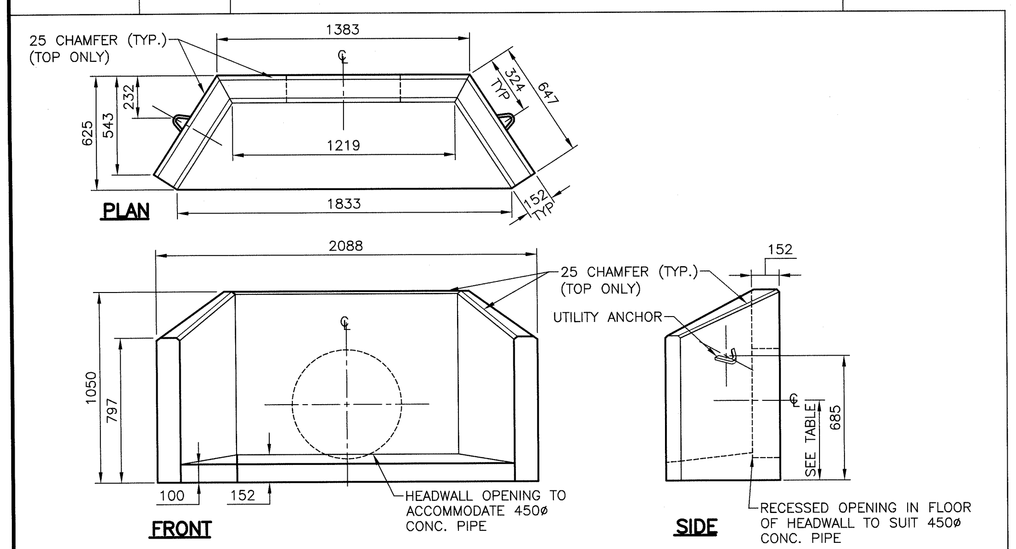

PRECAST STORM HEADWALL (9/C2)

SCALE : 1:20

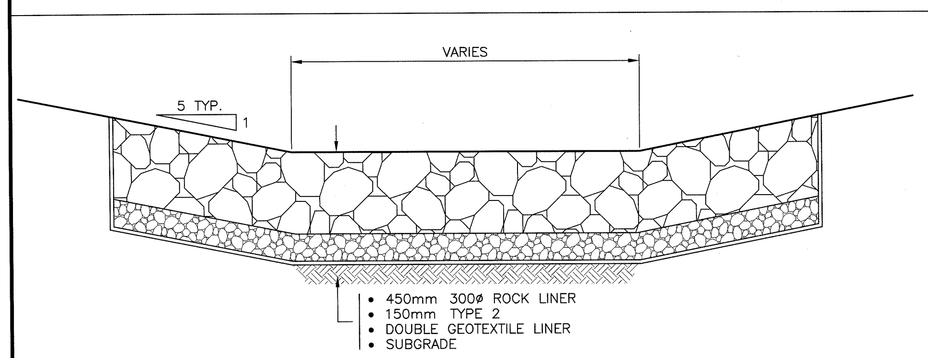

ARMOUR STONE SWALE AT HEADWALLS (10/C2)

SCALE : 1:20

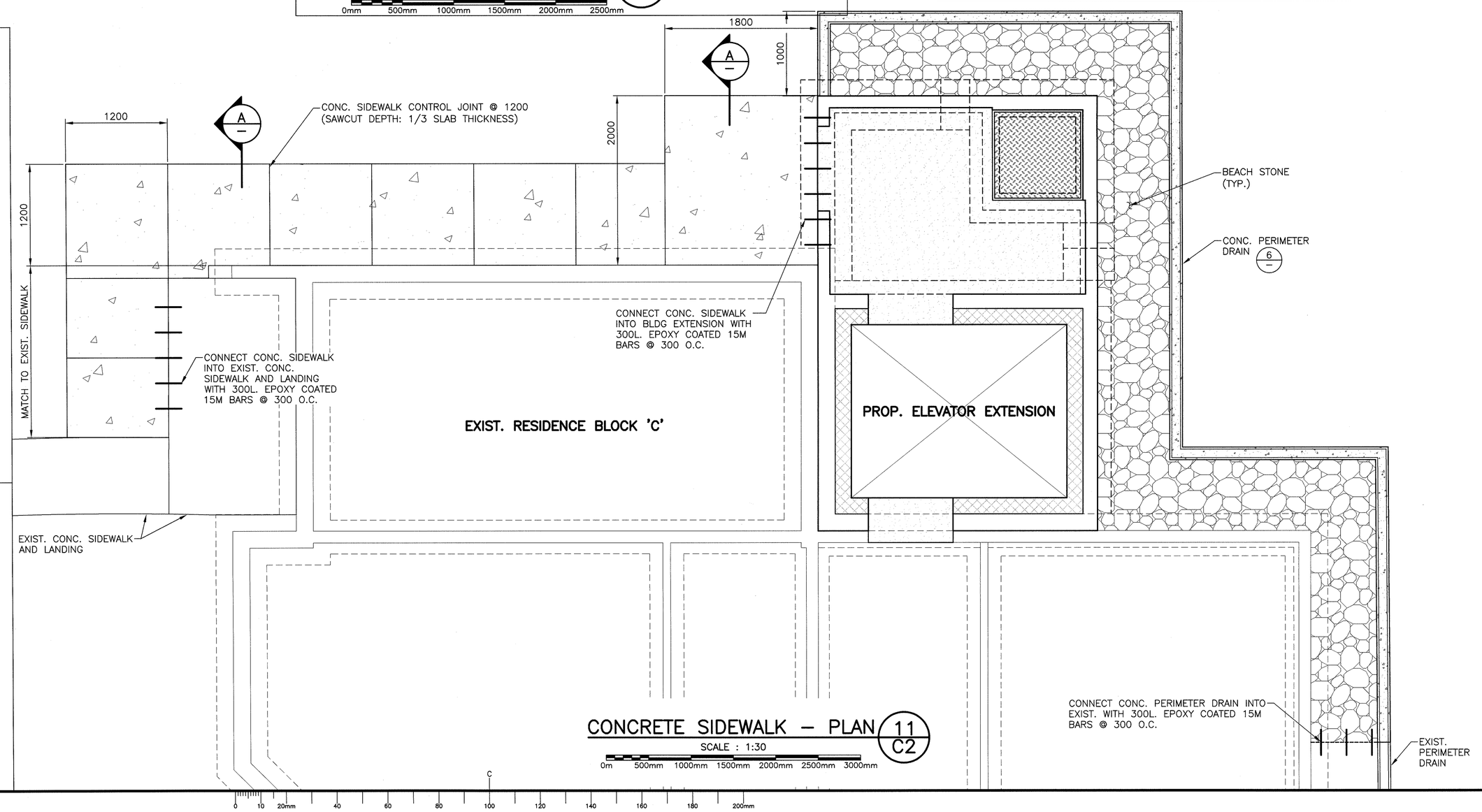

CONCRETE SIDEWALK – PLAN (11/C2)

SCALE : 1:30

Public Works and Government Services Canada / Travaux Publics et Services gouvernementaux Canada

CBCL LIMITED
Consulting Engineers
ISO 9001 CERTIFIED

REGISTERED PROFESSIONAL ENGINEER — DATE — D. ROUSELAND — 7854 — PROVINCE OF NOVA SCOTIA

revisions		date
1	ISSUED FOR TENDER	SEP.24 2013

project / projet
CANADIAN COAST GUARD COLLEGE MCTS RENOVATIONS
SYDNEY, NS

drawing / dessin
CIVIL MISCELLANEOUS DETAILS

designed CJK / conçu
date SEP 2013
drawn MEC / dessiné
date SEP 2013
approved / approuvé
date
Tender / Soumission
PWGSC Project Manager / Administrateur de projets TPSGC
project number / no. du projet
R.049698.003
drawing no. / no. du dessin
C3

PWGSC B1 (2004)

E-DRM/GDD-E: 458404