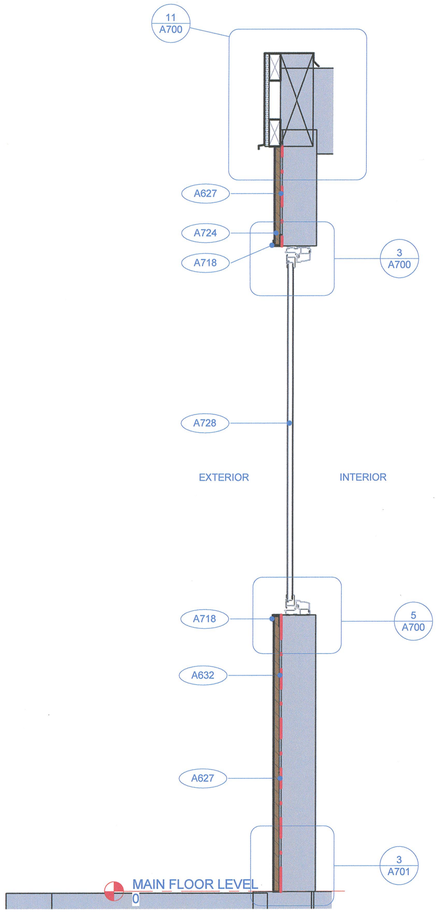


1 A300 WALL SECTION 1
1 : 10

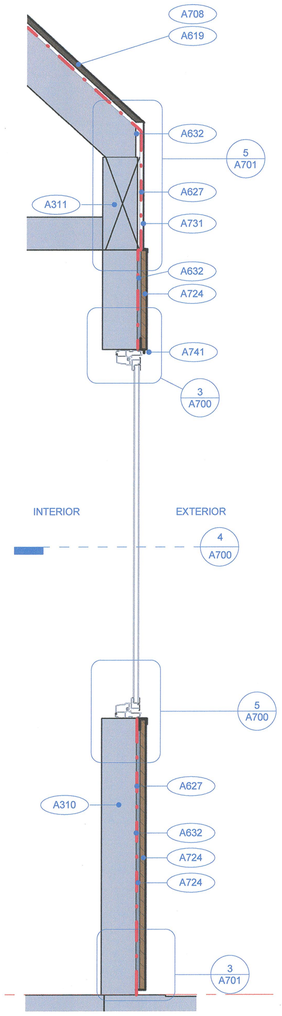


2 A300 WALL SECTION 2
1 : 10

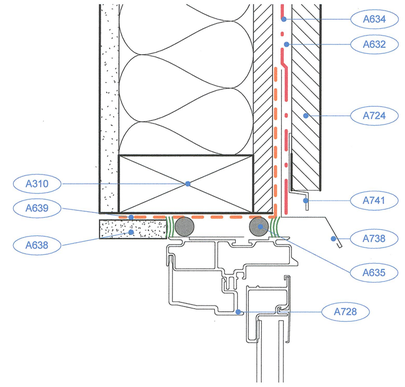


3 A700 SECTION DETIAL WINDOW HEAD
1 : 2

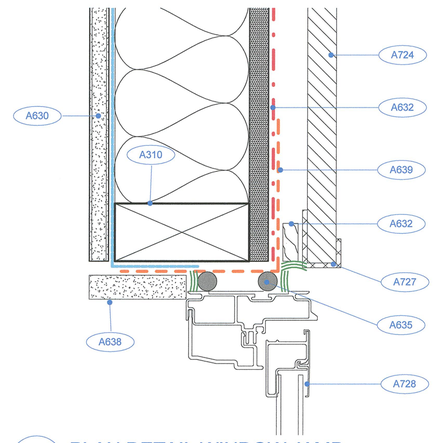


4 A700 PLAN DETAIL WINDOW JAMB
1 : 2

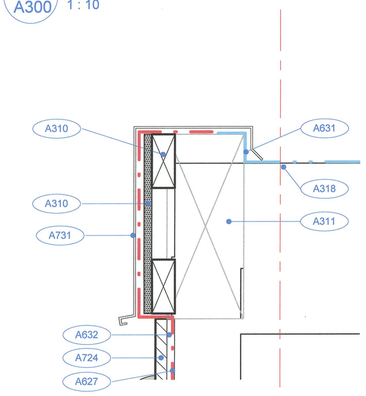


11 A700 SECTION DETAIL GLULAM CAP FLASHING
1 : 5

5

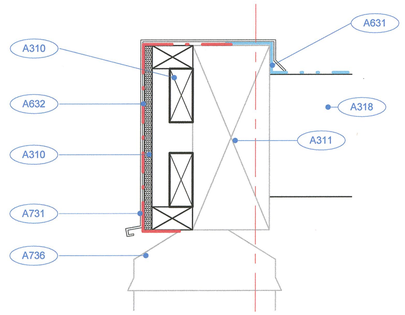


10 SECTION DETAILGLULAM CAP FLASHING
1 : 5

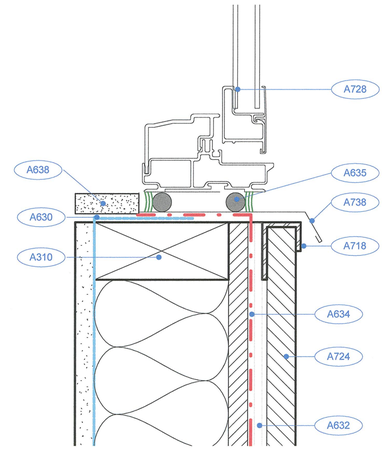


5 A700 SECTION DETAIL WINDOW SILL
1 : 2

| KEYNOTES | |
|---|---|
| NUMBER | DESCRIPTION |
| A724 | NEW WESTERN RED CEDAR TONGUE & GROOVE SIDING: V-GROOVED ON ONE SIDE (EV1S) WRCLA1, SIZE: 1 IN THICK X 8 IN WIDE, PATTERN: HORIZONTAL - REFER TO SPECIFICATIONS |
| A727 | NEW ALUMINUM REVEAL FOR LAP SIDING: EZ8 LAP GENERAL TRIM, FINISH: ANODIZED BLACK, BY EASYTRIM REVEALS |
| A728 | NEW SINGLE UNIT FIXED FIBERGLASS WINDOW. INSTALLATION: INTEGRAL NAILING FIN, COLOR: TAN - EXTERIOR, WHITE - INTERIOR, BY PELLA IMPERVIA COMMERCIAL |
| A731 | ALL EXPOSED GLULAM BEAMS TO BE WRAPPED WITH 0.8mm, PREMIUM COLOR: WEATHERED ZINC CM12-2006, 12000 SERIES PVDF (BY CASCADIA METALS) |
| A736 | REPAINT EXISTING METAL WALL CAP TO MATCH PREMIUM COLOR: WEATHERED ZINC CM12-2006, 12000 SERIES PVDF (BY CASCADIA METALS) |
| A738 | NEW PREFINISHED ALUMINUM FLASHING COVERING WINDOW OPENING FRAME - PREMIUM COLOR: WEATHERED ZINC CM12-2006, 12000 SERIES PVDF (BY CASCADIA METALS) |
| A741 | NEW ALUMINUM REVEAL FOR LAP SIDING: EZ4 LAP 'Z' TRIM, FINISH: ANODIZED BLACK, BY EASYTRIM REVEALS |

Public Works And Government Services Canada / Travaux publics et Services gouvernementaux Canada

REAL PROPERTY SERVICES
Pacific Region

SERVICES IMMOBILIERS
Region de Pacifique

BOLDWING CONTINUUM ARCHITECTS INC.

| KEYNOTES | |
|---|---|
| NUMBER | DESCRIPTION |
| A310 | EXISTING FRAMING & EXTERIOR SHEATHING TO REMAIN |
| A311 | EXISTING GLULAM BEAM TO REMAIN |
| A318 | EXISTING ROOF MEMBRANE TO REMAIN, PROTECT MEMBRANE DURING REMEDIATION WORK MAKE GOOD ANY DAMAGE TO ORIGINAL CONDITION |
| A619 | REMOVE & DISPOSE OF OFF-SITE EXISTING METAL ROOF PANELS & BUILDING PAPER. |
| A627 | NEW AIR BARRIER MEMBRANE (SELF ADHERING), EXTEND INTO ALL EXISTING OPENINGS - FULL DEPTH OF OPENING (JAMB & HEADER) LAP PAPER UNDER SELF ADHESIVE SILL MEMBRANE |
| A630 | EXISTING VAPOUR BARRIER TO REMAIN, SEAL INTO NEW WINDOW FRAME |
| A631 | NEW ROOFING MEMBRANE OVER EXISTING BUILT UP ROOF CONTINUE OVER CANT STRIP & PARAPET LAP OVER EXTERIOR AIR BARRIER, MINIMUM 100mm LAP |
| A632 | WALL CAVITY - MINIMUM 12mm THICK VERTICAL PRESSURE TREATED LATH @ 300mm OC |
| A634 | CONTINUOUS SELF-ADHESIVE VAPOUR/AIR BARRIER MEMBRANE (OVER APPROVED PRIMER). WHERE MEMBRANE IS APPLIED TO THE SILL OF A WINDOW OR DOOR OPENING, TURN MEMBRANE UP JAMB A MINIMUM OF 150mm. WINDOW SILL INSTALLATION - LAP OVER BUILDING WRAP / AIR BARRIER MIN. 100mm & SEAL CONTINUOUS |
| A635 | CONTINUOUS BEAD OF SEALANT (COMPATIBLE WITH ADJOINING MATERIALS) BETWEEN WINDOW FRAME OR DOOR FRAME OR CONCRETE WALL & GWB J TRIM. PROVIDE ETHAFOAM ROD BACKER AS REQUIRED FOR JOINT DEPTH & SIZE |
| A638 | NEW GYPSUM WALL BOARD RETURN INTO WINDOW OPENING, COMPLETE WITH PVC EDGE TRIM, PAINT NEW GWB TO MATCH EXISTING WALL FINISH |
| A639 | EXISTING BUILDING PAPER PEELED BACK & LAPPED OVER SELF-ADHESIVE MEMBRANE. WHERE MEMBRANE IS APPLIED TO THE SILL OF A WINDOW OR DOOR OPENING, TURN MEMBRANE UP JAMB A MINIMUM OF 100mm. WINDOW SILL INSTALLATION - LAP OVER BUILDING WRAP / AIR BARRIER MIN. 100mm & SEAL CONTINUOUS |
| A708 | NEW EXTERIOR ROOF STEEL CLADDING, PROFILE: TRADITION 100-4 (BY VICWEST), 24GA, PREMIUM COLOR: WEATHERED ZINC CM12-2006, 12000 SERIES PVDF (BY CASCADIA METALS) |
| A718 | NEW ALUMINUM REVEAL FOR LAP SIDING: EZ3 LAP INSIDE CORNER, FINISH: ANODIZED BLACK, BY EASYTRIM REVEALS |

| Revision / Revision | Description / Description | Date / Date |
|---|---|---|
| 4 | | |
| 3 | | |
| 2 | ISSUED FOR TENDER | 13-09-11 |
| 1 | ISSUED FOR CLIENT USE | 13-06-17 |
| 0 | ISSUED FOR FINAL CLIENT REVIEW | 13-03-28 |

Client / client
CANADA BORDER SERVICES AGENCY
800 Burrard Street
Vancouver B.C. V6z 2V8

Project title / Titre du projet
10290 - HWY 22A- SALMO, B.C.
Waneta Port of Entry - Building Envelope Remediation PWGSC - PROJECT NO. R.066395.003

Consultant Approval Box Only

Designed by / Concept par
AB

Drawn by / Dessine par
BCAI

PWGSC, Project Manager / Administrateur de Projets TPSGC
JULIAN HO

PWGSC, Reional Manager, Architectural and Engineering Services / Gestionnaire regionale, Services d'architecture et de genie,TPSGC
PHILIP FUNG

Drawing title / Titre du dessi
DETAILS

REGISTERED ARCHITECT ARTHUR ERWIN BUSE BRITISH COLUMBIA SEP 13 2013

| Project no. / no. du Projet. | Sheet / Feuille | Revision no. / La Revision no. |
|---|---|---|
| R.066395.003 | A700 | |

SHOP DRAWINGS: Prepare and submit to *Boldwing Continuum Architects Inc.* one electronic copy of all required shop drawings with supporting documents and two samples of materials where specified WITHOUT EXCEPTION. Shop drawings not reviewed and stamped by Contractor, verifying field measurements and compliance with contract documents will be REJECTED. Shop drawings to show construction details of all architectural elements; general arrangements, thicknesses, finishes, location of all services, typical and special installation conditions, material being supplied, and all connections, attachments, anchorages and locations of exposed fastenings as applicable. Shop drawings to incorporate applicable key plan, plans, elevations, sections, and details for all work submitted. No materials to be ordered and no work to be fabricated shall be undertaken until shop drawings and other related submittals been reviewed.

0 10 20 30 40 50 60 70 80 90 100mm