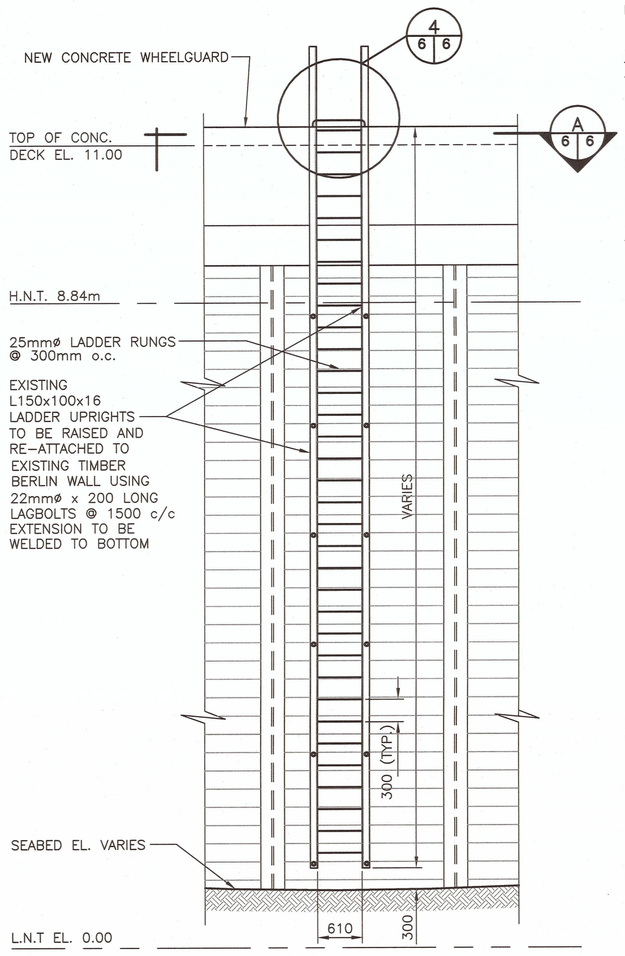

1/3 6 LADDER DETAIL
SCALE: 1:50
0m 1m 2m 3m 4m 5m

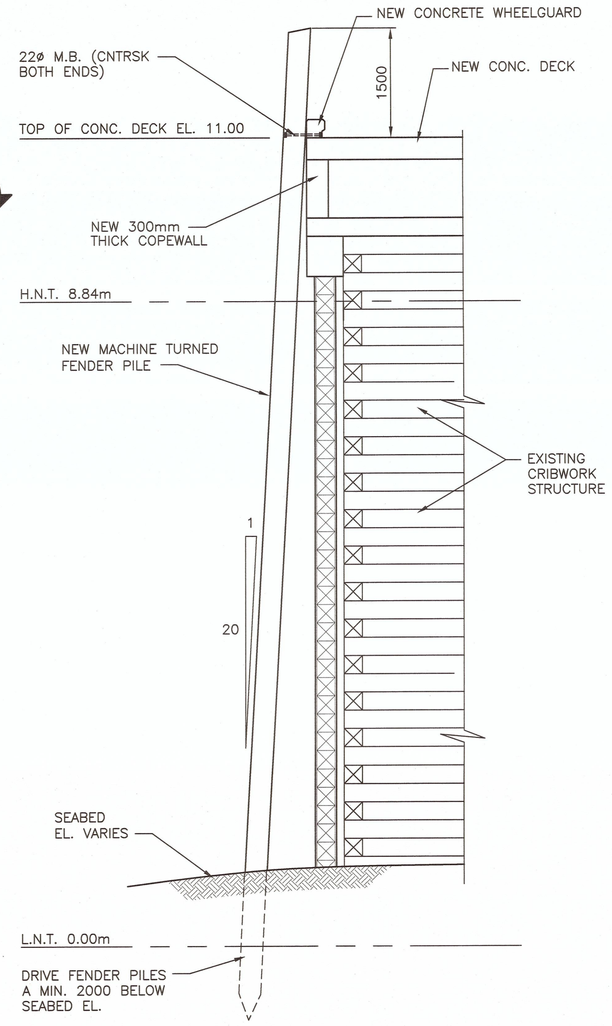

2/3 6 FENDER PILE DETAIL
SCALE: 1:50
0m 1m 2m 3m 4m 5m

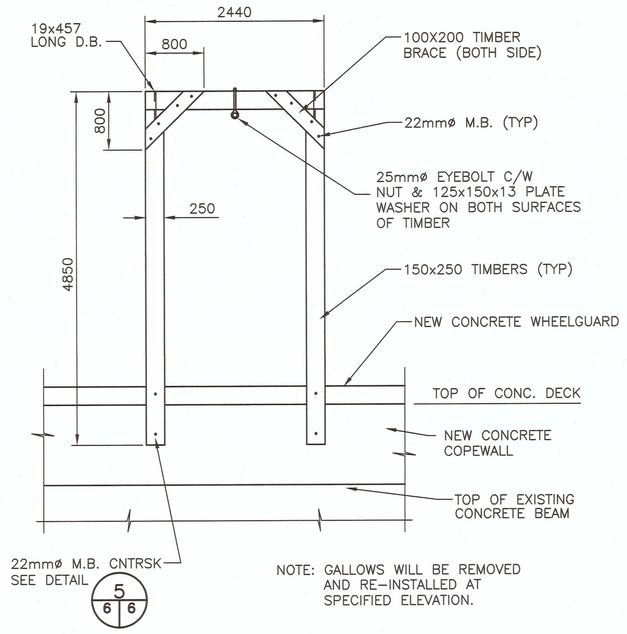

NOTE: GALLOWS WILL BE REMOVED AND RE-INSTALLED AT SPECIFIED ELEVATION.

3/3 6 GALLOWS DETAIL
SCALE: 1:50
0m 1m 2m 3m 4m 5m

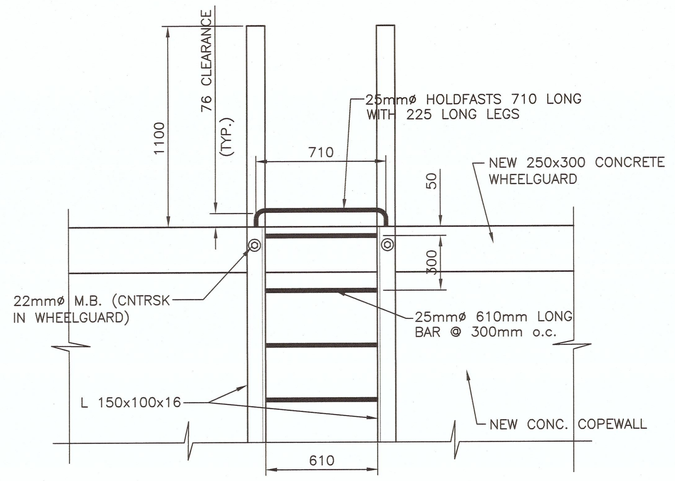

NOTE: WHERE EXISTING LADDERS ARE TO BE EXTENDED, THE EXTENSION WILL BE WELDED TO THE EXISTING LADDER USING 16mm CONTINUOUS WELDS. THE EXTENSIONS WILL BE ATTACHED TO THE BOTTOM OF THE LADDERS.

4/6 6 DETAIL
SCALE : 1:20
0mm 500mm 1000mm 1500mm 2000mm 2500mm

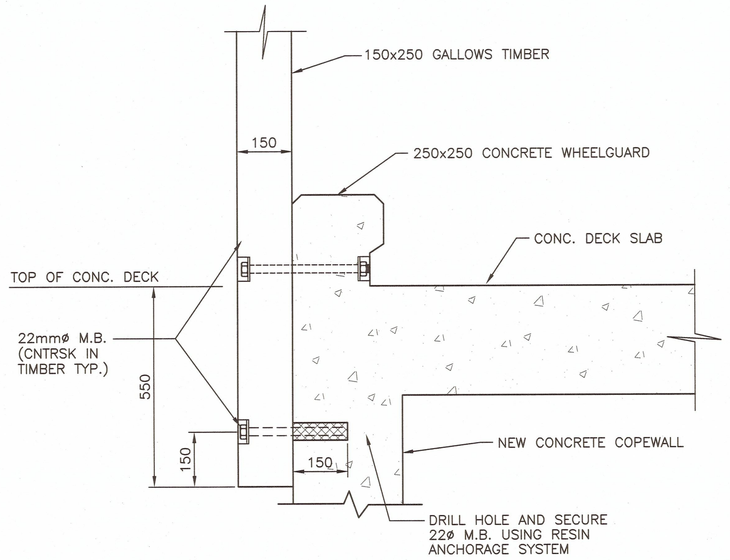

9/5 5 GALLOWS FASTENING DETAIL
SCALE : 1:10
0mm 100 200 300 400 500 600 700 800 900 1000mm

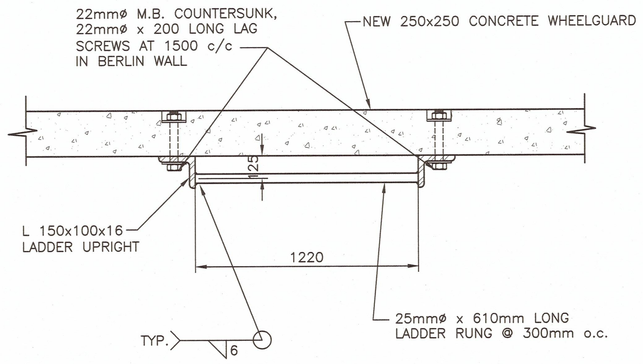

A/6 6 SECTION
SCALE : 1:20
0mm 500mm 1000mm 1500mm 2000mm 2500mm

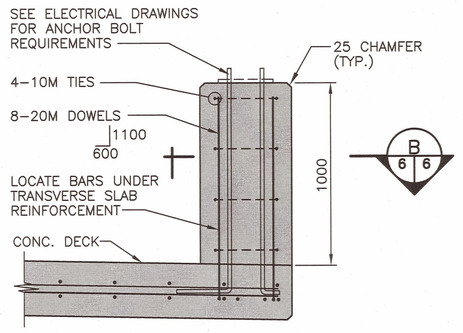

5/3 6 LIGHT POLE BASE DETAIL
SCALE : 1:20
0mm 500mm 1000mm 1500mm 2000mm 2500mm

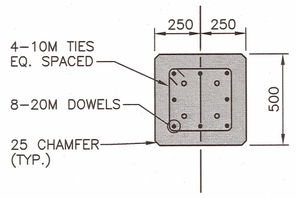

B/6 6 SECTION
SCALE : 1:20
0mm 500mm 1000mm 1500mm 2000mm

Public Works and Government Services Canada / Travaux Publics et Services gouvernementaux Canada

revisions		date

project / projet
RAISING DECK ELEVATION
BLACK RIVER
ST. JOHN CO., N.B.

drawing / dessin
MISCELLANEOUS DETAILS

designed / conçu: R. DOUCET
date: 2013/09/13
drawn / dessiné: J. KOVAL
date: 2013/09/13
approved / approuvé
date: OCT. 29/13
Tender / Soumission
PWGSC Project Manager / Administrateur de projets TPSGC: 24 OCT 2013
project number / no. du projet: R.064463.001
drawing no. / no. du dessin: 6 OF 6

PWGSC B1 (2004)

E-DRM/GDD-E: #455358 VERSION 1