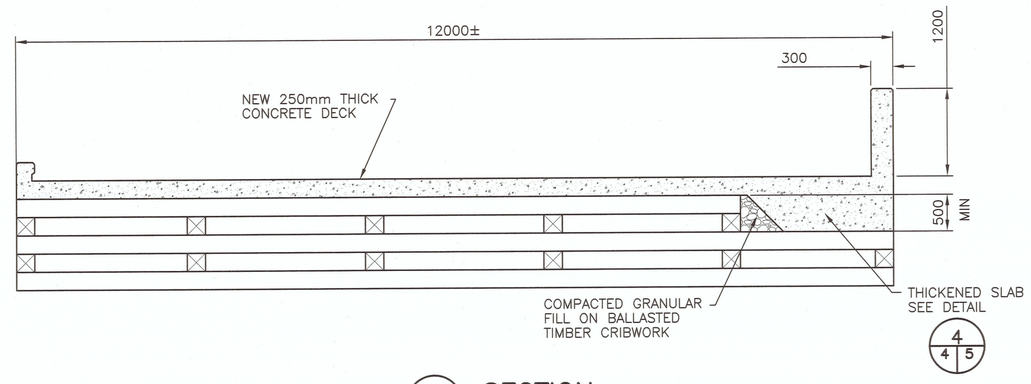

NOTE: REMOVE TIMBER CRIBWORK WHERE REQUIRED TO INSTALL NEW THICKENED SLAB.

A | 3 4 SECTION

SCALE: 1:50

0m 1m 2m 3m 4m 5m

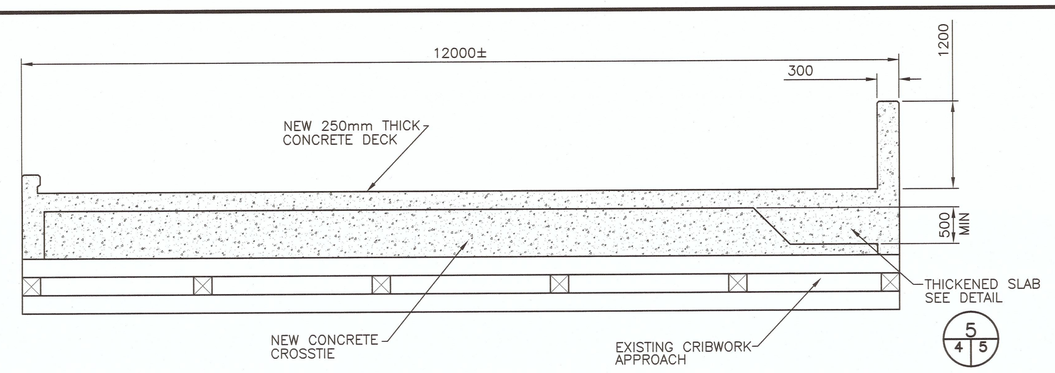

B | 3 4 SECTION

SCALE: 1:50

0m 1m 2m 3m 4m 5m

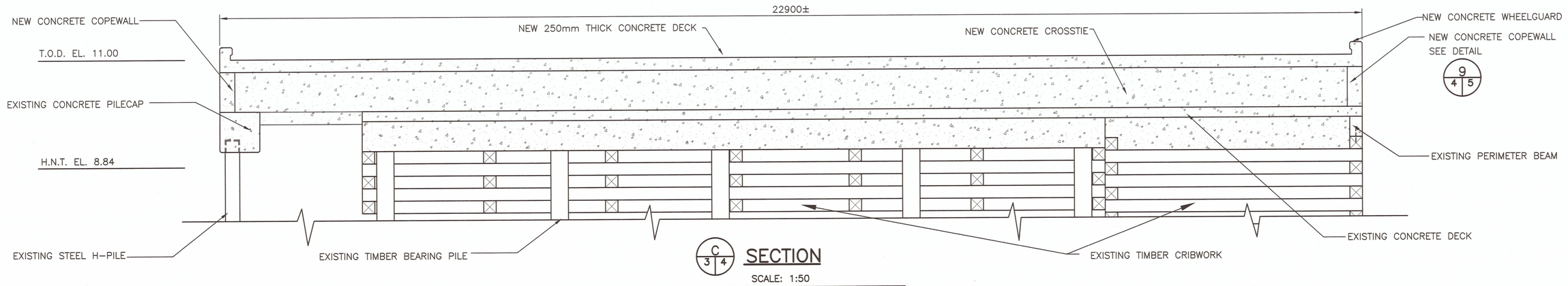

C | 3 4 SECTION

SCALE: 1:50

0m 1m 2m 3m 4m 5m

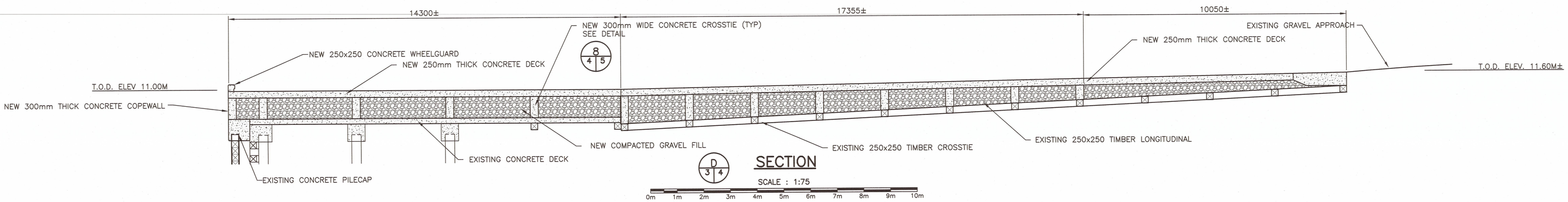

D | 3 4 SECTION

SCALE : 1:75

0m 1m 2m 3m 4m 5m 6m 7m 8m 9m 10m

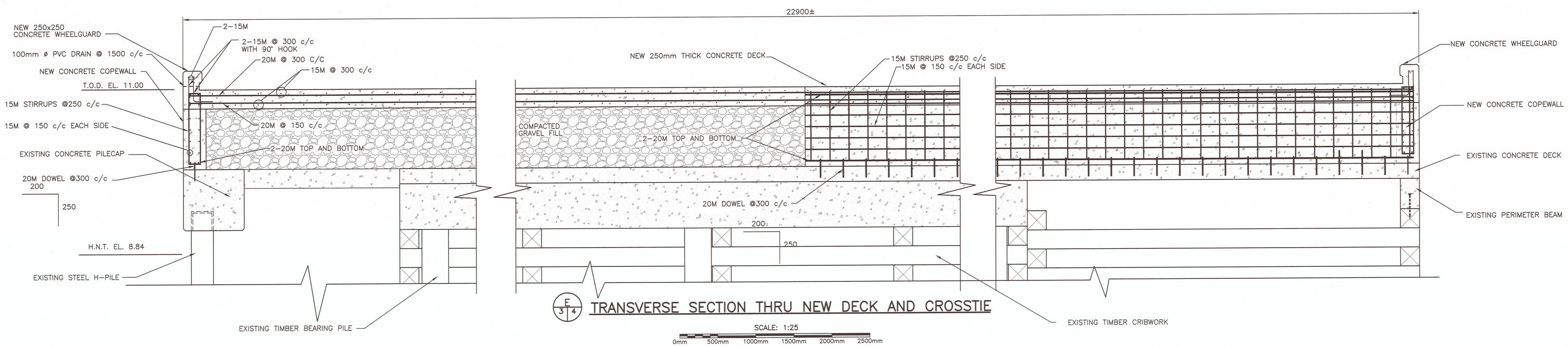

F | 3 4 TRANSVERSE SECTION THRU NEW DECK AND CROSSTIE

SCALE: 1:25

0mm 500mm 1000mm 1500mm 2000mm 2500mm

Public Works and Government Services Canada / Travaux Publics et Services gouvernementaux Canada

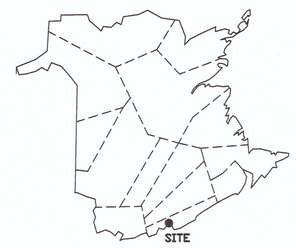

MAP OF NEW BRUNSWICK
CARTE DU NOUVEAU-BRUNSWICK

revisions		date

project / projet

RAISING DECK ELEVATION

BLACK RIVER

ST. JOHN CO., N.B.

drawing / dessin

SECTIONS

designed / conçu: R.DOUCET
date: 2013/09/13
drawn / dessiné: J. KOVAL
date: 2013/09/13
approved / approuvé:
date: OCT. 29 13
Tender / Soumission: 29 Oct 2013
PWGSC Project Manager / Administrateur de projets TPSGC

project number / no. du projet: R.064463.001

drawing no. / no. du dessin: 4 OF 6