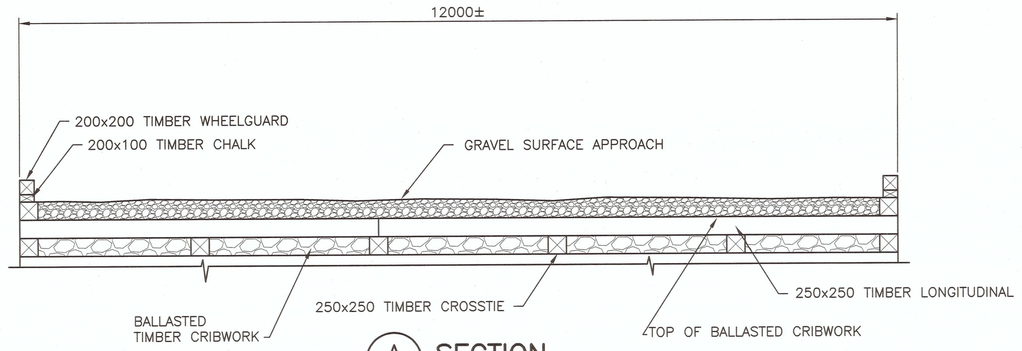

A 1 2 SECTION
SCALE: 1:50
0m 1m 2m 3m 4m 5m

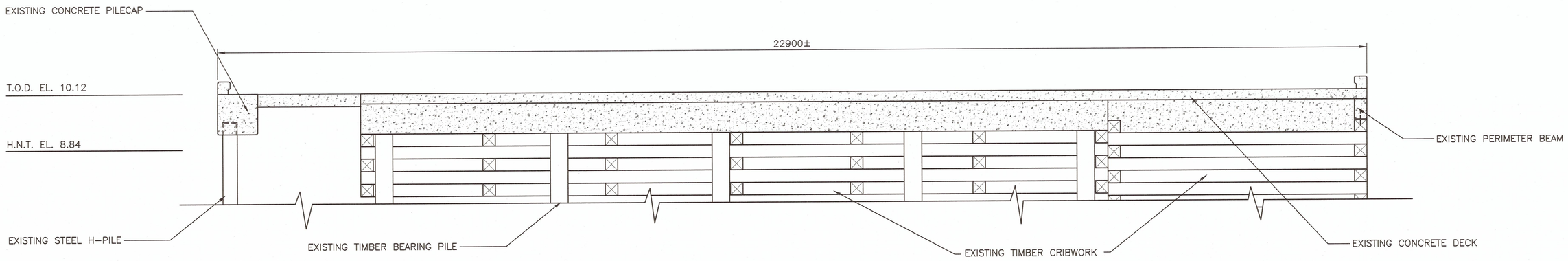

B 1 2 SECTION
SCALE: 1:50
0m 1m 2m 3m 4m 5m

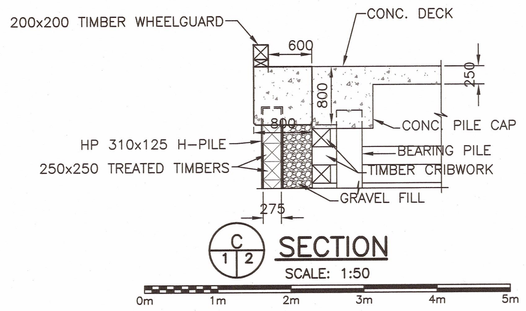

C 1 2 SECTION
SCALE: 1:50
0m 1m 2m 3m 4m 5m

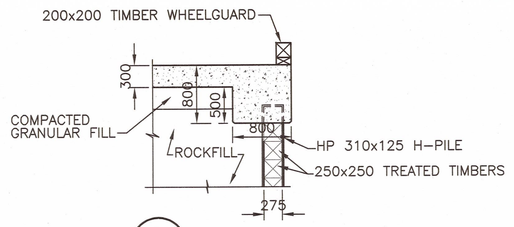

D 1 2 SECTION
SCALE: 1:50
0m 1m 2m 3m 4m 5m

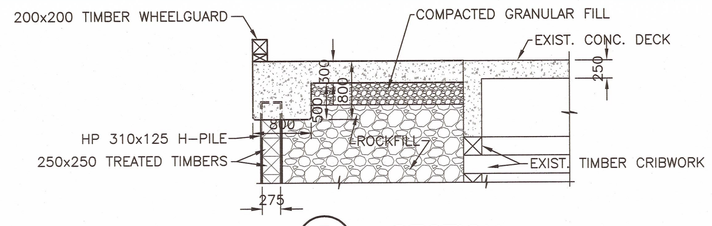

E 1 2 SECTION
SCALE: 1:50
0m 1m 2m 3m 4m 5m

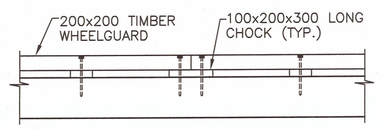

1 1 2 WHEELGUARD DETAIL
SCALE: 1:50
0m 1m 2m 3m 4m 5m

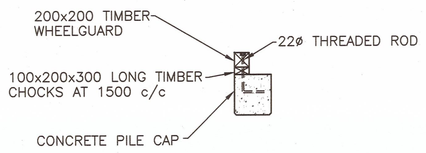

F 1 2 SECTION
SCALE: 1:50
0m 1m 2m 3m 4m 5m

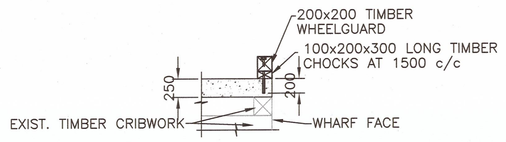

G 1 2 SECTION
SCALE: 1:50
0m 1m 2m 3m 4m 5m

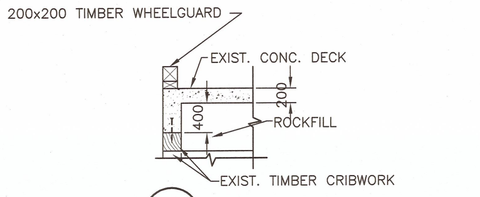

H 1 2 SECTION
SCALE: 1:50
0m 1m 2m 3m 4m 5m

Public Works and Government Services Canada / Travaux Publics et Services gouvernementaux Canada

revisions		date

project / projet

RAISING DECK ELEVATION

BLACK RIVER

ST. JOHN CO., N.B.

drawing / dessin

EXISTING SECTIONS AND DETAILS

designed / conçu: R. DOUCET
date: 2013/09/13
drawn / dessiné: J. KOVAL
date: 2013/09/13
approved / approuvé:
date: Oct. 24/13
Tender / Soumission
PWGSC Project Manager / Administrateur de projets TPSGC: 20 Oct 2013

project number / no. du projet: R.064463.001

drawing no. / no. du dessin: 2 OF 6

E-DRM/GDD-E: #455358 Version 1