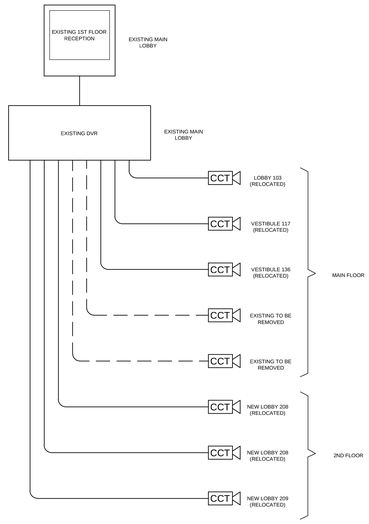

1 E7-02 BASE BUILDING CCTV SCHEMATIC

NTS

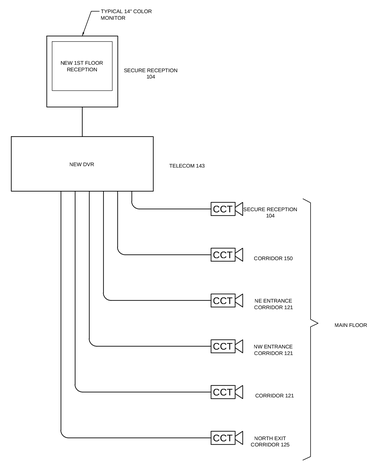

2 E7-02 TENANT CCTV SCHEMATIC

NTS

NOTES:

1. ALL CABLES SHALL BE IN CONDUIT, MINIMUM 3/4".
2. COORDINATE ENTIRE INSTALLATION WITH CCTV SUPPLIER AND CONFORM TO THEIR REGULATION AND REQUIREMENTS.
3. WALL MOUNTED RACKS SHALL BE PROVIDED FOR ALL SYSTEMS.
4. PROVIDE 120V POWER VIA T.V.S.S. RECEPTACLES AND DEDICATED CIRCUITS FOR EACH SYSTEM AND FOR ALL COMPONENTS.
5. ALL CCTV CAMERA, MONITORS AND ASSOCIATED DEVICES INSIDE TENANT SPACE ARE NEW.
6. ALL OTHER EXISTING CCTV CAMERA, MONITOR AND ASSOCIATED DEVICES NOT SHOWN ON SCHEMATIC ARE TO REMAIN AND PART OF BASE BUILDING CCTV SYSTEM.

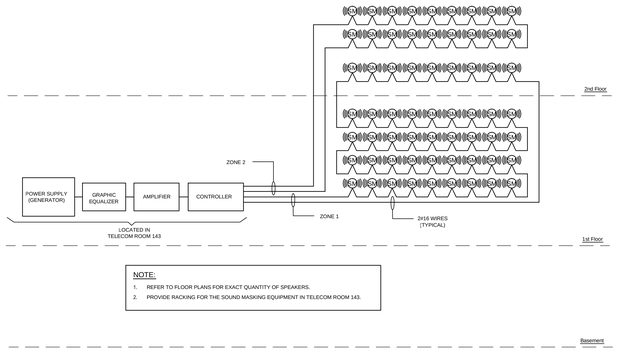

NOTE:

1. REFER TO FLOOR PLANS FOR EXACT QUANTITY OF SPEAKERS.
2. PROVIDE RACKING FOR THE SOUND MASKING EQUIPMENT IN TELECOM ROOM 143.

6 E7-02 SOUND MASKING RISER DIAGRAM

NTS

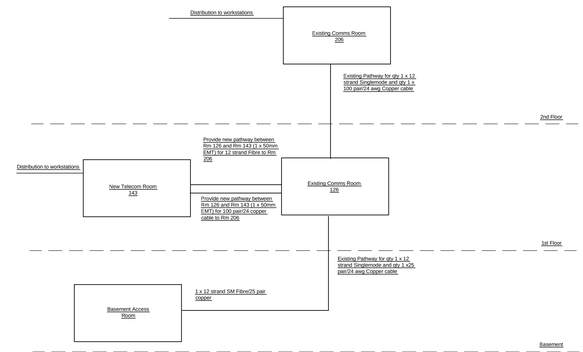

5 E7-02 VOICE/DATA RISER DIAGRAM - TRUCK CABLES

NTS

NOTE:

1. ALL WIRING TO BE IN EMT CONDUIT.
2. ALL EXISTING DOOR SECURITY DEVICES NOT SHOWN IN SCHEMATIC ARE TO REMAIN.

LEGEND

	CARD READER ACCESS (SWIPE)
	DOOR CONTACT (FLUSH IN FRAME)
	ELECTRIC STRIKE
REX	REQUEST TO EXIT SENSOR

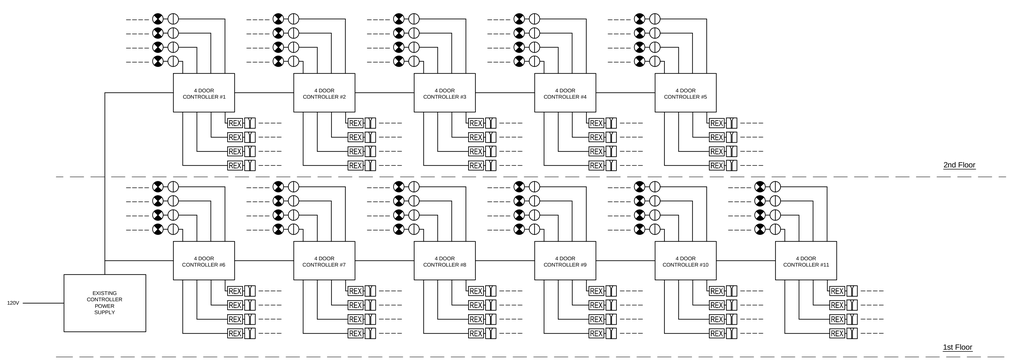

3 E7-02 TENANT DOOR ACCESS & SECURITY SYSTEM SCHEMATIC

NTS

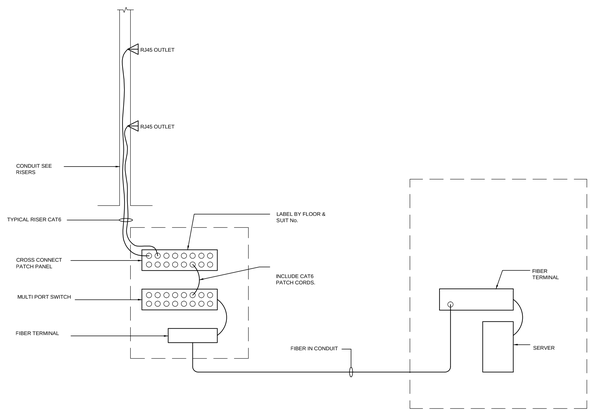

4 E7-02 CAT6 SYSTEM SCHEMATIC

NTS

Public Works and Government Services Canada / Travaux publics et Services gouvernementaux Canada

REAL PROPERTY SERVICES
Western Region

SERVICES IMMOBILIERS
Région de l'ouest

CONSULTANT

These design documents are prepared solely for the use by the party with whom the design professional has entered into a contract and there are no representations of any kind made by the design professional to any party with whom the design professional has not entered into a contract.
Any use of the drawing, disk or electronic data without the expressed written permission of the design professional is prohibited.
The contractor is responsible to verify all dimensions with conditions on the site and report discrepancies to Tower Engineering for adjustment.
All prints to be returned.

TOWER PROJECT NO. : 13039

TOWER ENGINEERING GROUP
UNIT 1 – 1140 WAVERLEY ST. WINNIPEG, MB R3T 0P4
TEL: (204) 925–1150 FAX: (204) 925–1155
EMAIL: towereng@towereng.ca WEB: www.towereng.ca
• WINNIPEG • CALGARY • CAMBRIDGE

APEGM Certificate of Authorization
Tower Engineering Group
No. 4156 Expiry: April 30, 2014

DO NOT SCALE DRAWINGS

Revision/ Révision	Description/Description	Date/Date
0	ISSUED FOR TENDER/CONSTRUCTION	26/11/13

Client/client

PUBLIC WORKS GOVERNMENT SERVICES CANADA

100-167 LOMBARD AVENUE
PO BOX 1408
WINNIPEG, MANITOBA R3C 2Z1

Project title/Titre du projet

STANLEY KNOWLES FIT-UP
391 YORK AVENUE

Approved by/Approuve par
TT

Designed by/Concept par
DA

Drawn by/Dessine par
DA

PWGSC Project Manager/Administrateur de Projets TPSGC
OH

PWGSC Architectural and Engineering Resources Manager/ Ressources Architectural et de Directeur d'Ingénierie, TPSGC
SO

Client/client
PWGSC

Drawing title/Titre du dessin

ELECTRICAL
SYSTEMS RISER DIAGRAMS

Project No./No. du projet	Sheet/ Feuille	Revision no./ La Révision no.
R.056754.002	E7-02 OF 21	0

A0 - PWGSC - A0 - 1189X841

0 10 20 30 40 50 60 70 80 90 100mm

Title Block 1