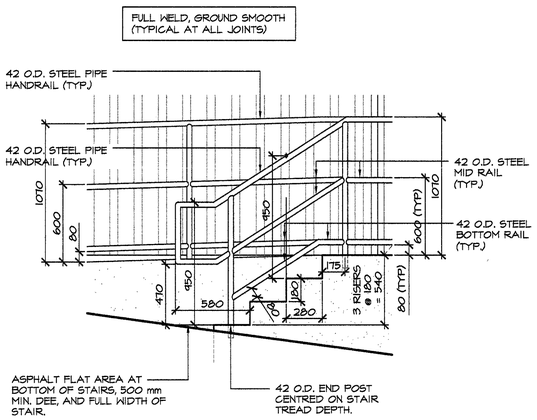

EXTERIOR STAIR AT GARBAGE AND RECYCLING (143)

8 / A7.2

SCALE: 1:50

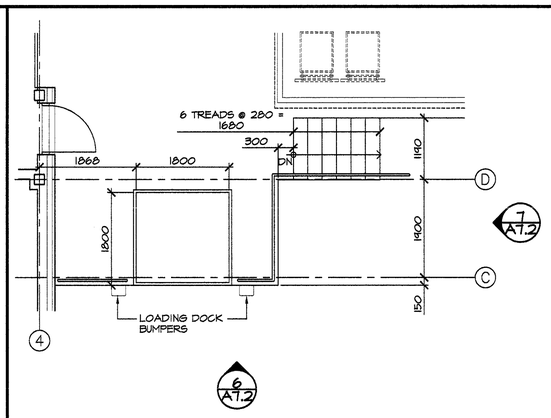

EXTERIOR STAIR AT LOADING DOCK (138)

5 / A7.2

SCALE: 1:50

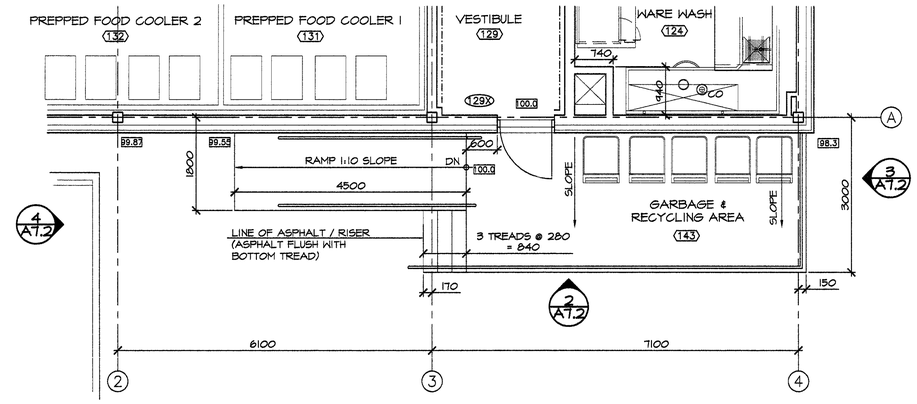

PART PLAN - EXTERIOR STAIR AND RAMP AT GARBAGE & RECYCLING

1 / A7.2

SCALE: 1:50

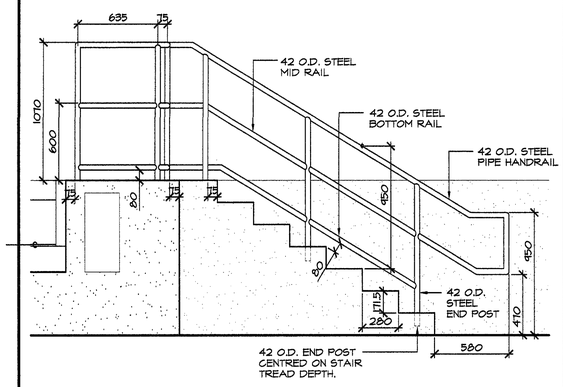

EXTERIOR STAIR AT LOADING DOCK (138)

9 / A7.2

SCALE: 1:50

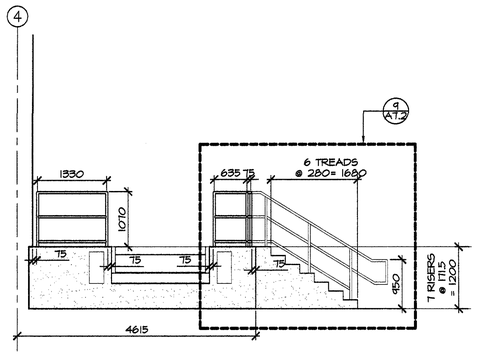

EXTERIOR STAIR AT LOADING DOCK (138)

6 / A7.2

SCALE: 1:50

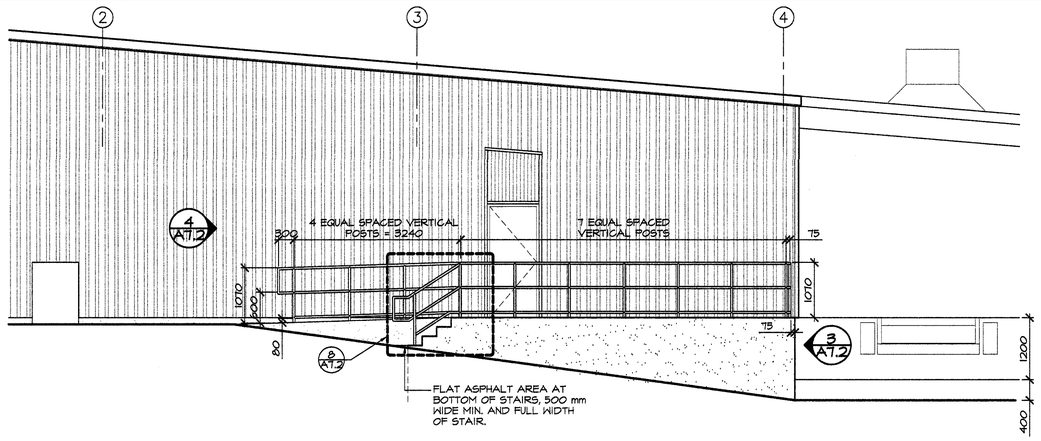

ELEVATION - EXTERIOR STAIR AND RAMP AT GARBAGE & RECYCLING

2 / A7.2

SCALE: 1:50

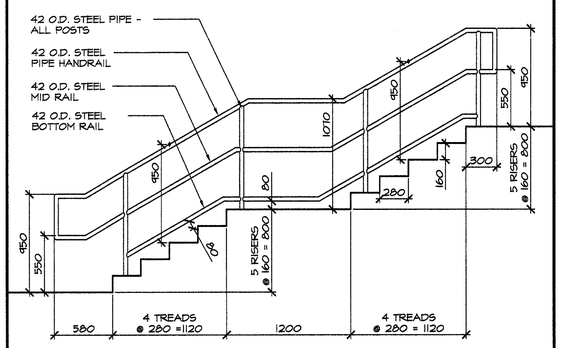

EXTERIOR STAIR AT MAIN ENTRANCE SIDEWALK

10 / A7.2

SCALE: 1:25

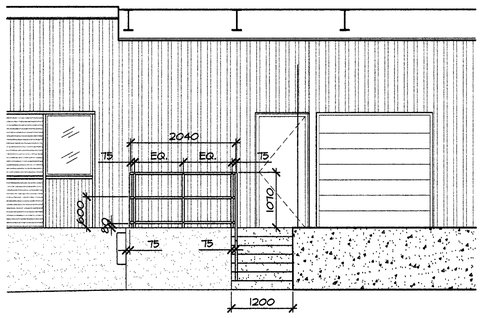

EXTERIOR STAIR AT LOADING DOCK (138)

7 / A7.2

SCALE: 1:50

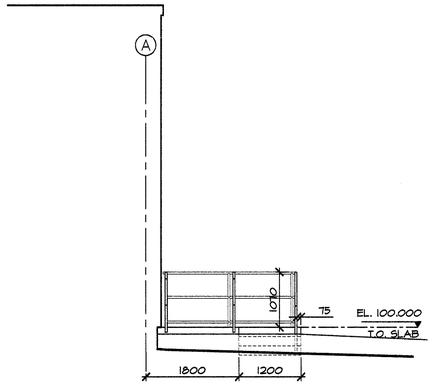

ELEVATION - EXTERIOR RAMP AT GARBAGE & RECYCLING

4 / A7.2

SCALE: 1:50

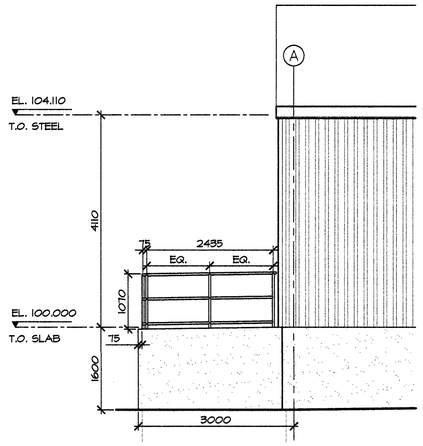

ELEVATION - EXTERIOR STAIR AT GARBAGE & RECYCLING

3 / A7.2

SCALE: 1:50

Public Works and Government Services Canada / Travaux Publics et Services gouvernementaux Canada

DFS INC. architecture & design

100 years

Saint John, NB
Montréal, QC

85 Charlotte Street, Suite 403
Saint John, New Brunswick E2L 2J2
T: (506) 634-8377 F: (506) 632-1741
www.dfsarch.com

94087
CERTIFICATE of PRACTICE
Richard R. Gradon
DFS INC.
ARCHITECTS ASSOCIATION of NEW BRUNSWICK

revisions		date
0	ISSUED FOR TENDER	NOV. 29 2013

project / projet

NEW FOOD SERVICES BUILDING
WESTMORLAND INSTITUTION

DORCHESTER, NB

drawing / dessin

STAIR PLANS SECTIONS AND DETAILS

designed / conçu: R.G.
date: Nov. 29, 2013
drawn / dessiné: T.H.
date: Nov. 29, 2013
approved / approuvé: G.K.
date: Nov. 29, 2013
Tender / Soumission: PWGSC Project Manager / Administrateur de projets TPSGC — 13.12.10
project number / no. du projet: R.061828.001
drawing no. / no. du dessin: A7.2

PWGSC B1 (2004)

E-DRM/GDD-E: 441442 Version 1