Public Works and Government Services Canada

Travaux publics et Services gouvernementaux Canada

RETURN BIDS TO:
RETOURNER LES SOUMISSIONS À:
Bid Receiving - PWGSC / Réception des soumissions - TPSGC
11 Laurier St. / 11, rue Laurier
Place du Portage, Phase III
Core 0A1 / Noyau 0A1
Gatineau, Québec K1A 0S5
Bid Fax: (819) 997-9776

SOLICITATION AMENDMENT
MODIFICATION DE L'INVITATION

The referenced document is hereby revised; unless otherwise indicated, all other terms and conditions of the Solicitation remain the same.

Ce document est par la présente révisé; sauf indication contraire, les modalités de l'invitation demeurent les mêmes.

Comments - Commentaires

Vendor/Firm Name and Address
Raison sociale et adresse du fournisseur/de l'entrepreneur

Issuing Office - Bureau de distribution

Electrical & Electronics Products Division
11 Laurier St./11, rue Laurier
7B3, Place du Portage, Phase III
Gatineau, Québec K1A 0S5

Title - Sujet HYDRAULIC CNC PRESS BRAKE	
Solicitation No. - N° de l'invitation 31184-139567/A	**Amendment No. - N° modif.** 002
Client Reference No. - N° de référence du client 31184-139567	**Date** 2014-01-29
GETS Reference No. - N° de référence de SEAG PW-$$HN-442-64271	
File No. - N° de dossier hn442.31184-139567	**CCC No./N° CCC - FMS No./N° VME**
Solicitation Closes - L'invitation prend fin at - à 02:00 PM on - le 2014-02-04	**Time Zone** **Fuseau horaire** Eastern Standard Time EST
F.O.B. - F.A.B. **Plant-Usine:** ☐ **Destination:** ☑ **Other-Autre:** ☐	
Address Enquiries to: - Adresser toutes questions à: Hamel, Jean-Yves	**Buyer Id - Id de l'acheteur** hn442
Telephone No. - N° de téléphone (819) 956-8278 ( )	**FAX No. - N° de FAX** ( ) -
Destination - of Goods, Services, and Construction: **Destination - des biens, services et construction:**	

Instructions: See Herein

Instructions: Voir aux présentes

Delivery Required - Livraison exigée	**Delivery Offered - Livraison proposée**
Vendor/Firm Name and Address **Raison sociale et adresse du fournisseur/de l'entrepreneur** **Telephone No. - N° de téléphone** **Facsimile No. - N° de télécopieur**	
Name and title of person authorized to sign on behalf of Vendor/Firm (type or print) **Nom et titre de la personne autorisée à signer au nom du fournisseur/ de l'entrepreneur (taper ou écrire en caractères d'imprimerie)** **Signature**	**Date**

Canada

Amendment 002

Amendment 002 is raised to answer bidder questions.

Question 1

Regarding delivery, rigging and installation:

Will the machine be delivered to a raised dock or to the ground?

Please provide the layout of the building (Widths, heights, floor thicknesses, …)

Answer 1

The building is equipped with a raised dock located in the shipping bay. The shipping bay access door is 12 ft high by 13 ft wide.

From the raised dock to the final location, the machine will go through a hallway of at least 9 ft wide. It will have to make a 90° turn and go through an access door of 11 ft high by 12 ft wide.

The shop floor is 4 in thick concrete. Steel plates (Supplied by the contractor) will be required to properly anchor the machine as applicable.

There is an electrical ground in the vicinity of where the press-brake will be installed.

Question 2

Annex A states: "The Press Brake ram nose design must have a full-length die slot with a Crosswise "C" slot."

We believe that should read: "The Press Brake **bed** design must have a full-length die slot with a crosswise "C" slot."

Can you clarify?

Answer 2

The crosswise "C" slot is a feature of the upper beam design in order to accept punches with straight push button or bolt-on safety tangs.

See attached pictures for more details.

The micro crowned bed must be adjusted manually. A powered bed crowing device is not essential but will be acceptable.

Question 3

At Annex A:

Please explain what the 3 axes of an X, R back gauge is, as you have only specified 2 axes X and R.

Please explain what is meant by independently controlled back stops (or fingers) to allow R axis rotation of the work piece.

Are you stating the same thing in different words or do you require separate R1 and R2 axes?

Answer 3

They are 2 translation axis (R and X) and 1 rotation axis (R):

R axis is the 1st axis and is the up and down movement of the finger stops. In other words:

R1= up movement
R2= down movement

Both stop gauge fingers are moving together in this direction.

X axis is the 2nd axis and is the movement towards and away from operator (Back and forth movement). In other words:

X1= forward direction movement
X2= backward direction movement

In this case the stop gauge fingers move independently, providing additional bending capability at angle. The independent movement of the fingers create a rotational movement on the horizontal plan, which is perpendicular to the R axis. The 3rd axis is the rotation of the R axis.

Question 4

At Item 001:

The control must have a solid-state hard drive with at least 4GB of memory.

Can a USB and/or flash card possibility meet this criterion?

Answer 4

No, the controller must be designed with an internal memory system.

Question 5

At Item 001:

Ethernet LAN only or Internet too?

Answer 5

Ethernet LAN access is essential. Internet access capability is desirable.

Question 6

At Item 001 (Commissioning):

Who is responsible for unloading and lifting?

Who is responsible for the placement?

Who is responsible for the connection?

Answer 6

The contractor is responsible for unloading and lifting.

The contractor is responsible for the placement, leveling and anchoring if necessary.

Canada will make the electrical connection and if necessary, the compressed air system connection.

Question 7

At Items 006 to 0032:

Does Canada want to 10 feet sections only or sections covering a length of 10 feet in total?

Answer 7

Dies and punches must be in 10 feet sections.

All other terms and conditions remain the same.

STRAIGHT TANG VS G STYLE TOOLING

Wilson Tool now offers American-style press brake tooling featuring industry standard groove on its tang. Available in all the same profiles as our standard American tooling, Wilson's "G-style" tooling is fully compatible with all clamping systems on the market today that require a groove in the tooling.

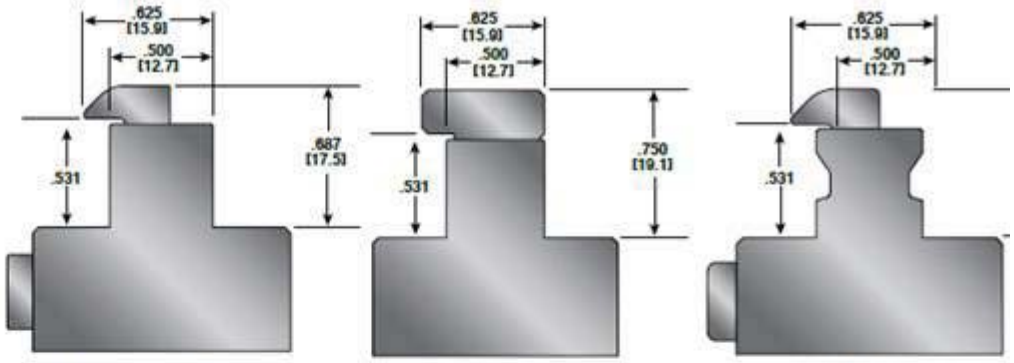

Straight Tang
Push Button Safety Tang

Straight Tang
Bolt-on Solid Safety Tang
(Standard on all long punches)

G Tang
Push Button Safety Tang

EAR PIECE

When ordering a special ear section from Wilson Tool, please indicate the following dimensions.

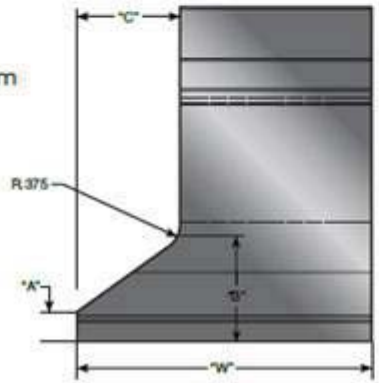

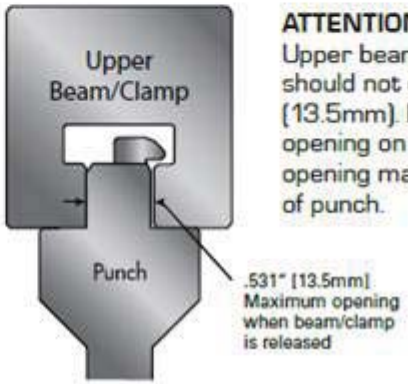

ATTENTION:
Upper beam/clamp opening should not exceed .531" (13.5mm). Exceeding specified opening on upper beam/clamp opening may result in release of punch.


Crosswise "C" slot