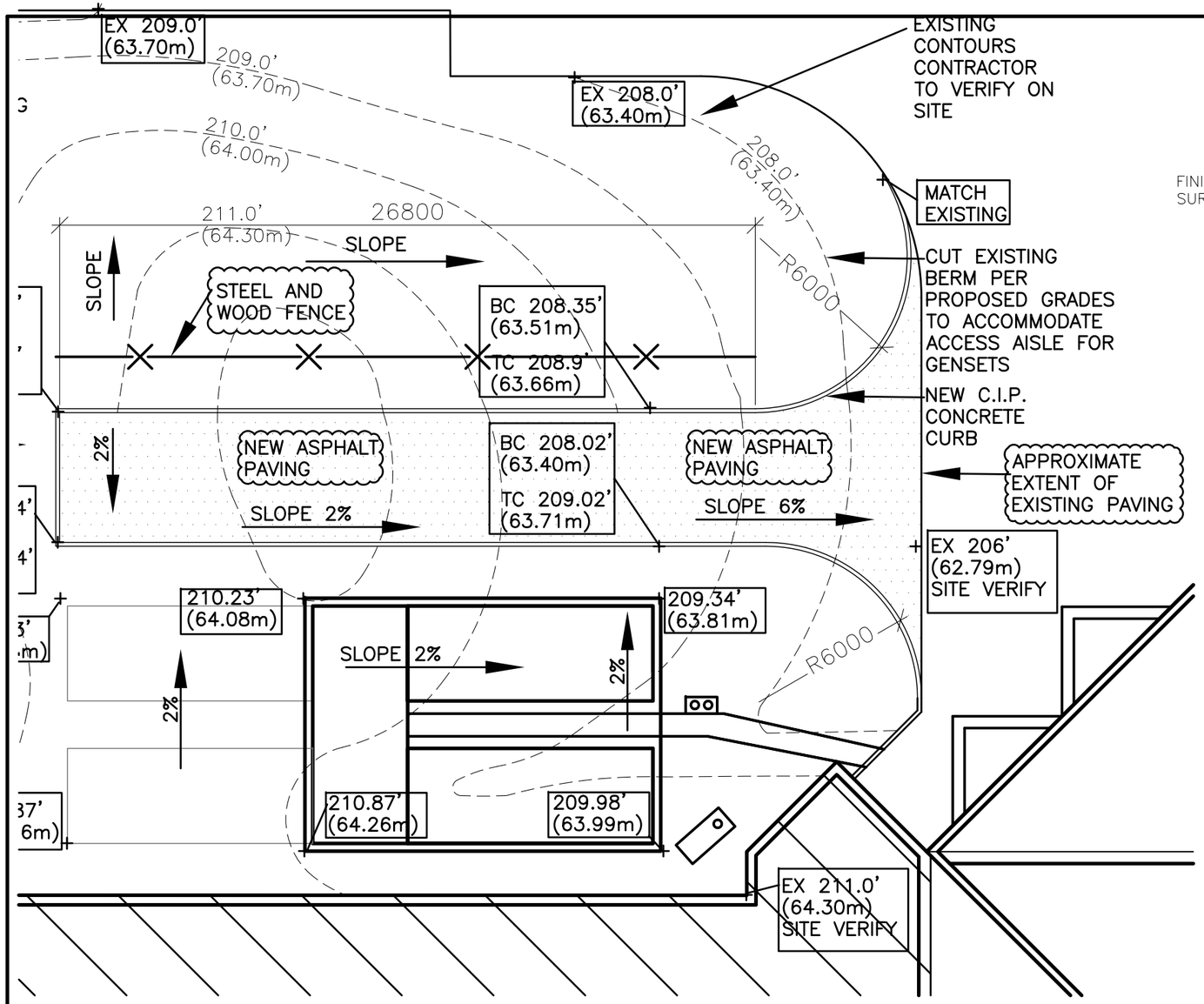

LEGEND

BC	BASE OF CURB
TC	TOP OF CURB
EX	EXISTING ELEVATION

1 GRADING PLAN AT NEW GENERATOR
A100 L100
1:200

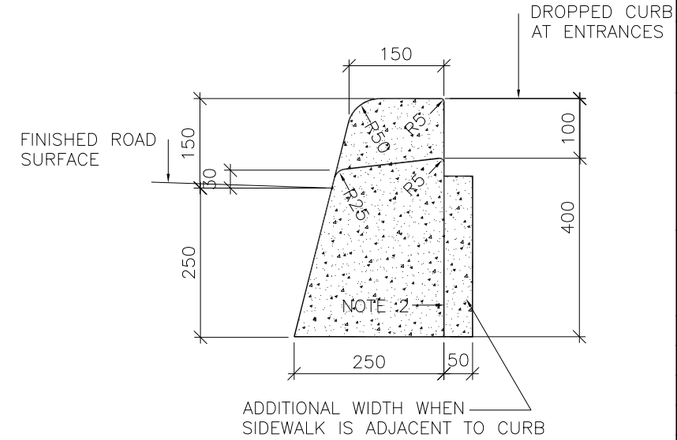

NOTES:
1. WHEN SIDEWALK IS CONTINUOUSLY ADJACENT, THE DROPPED CURB AT ENTRANCES IS REDUCED TO 75mm
2. FOR SLIPFORMING PROCEDURE, A 5% BATTER IS ACCEPTABLE
A. TREATMENT AT ENTRANCES SHALL BE ACCORDING TO OPSD 351.010
B. OUTLET TREATMENT SHALL BE ACCORDING TO OPSD 610 SERIES
C. THE TRANSITION FROM ONE CURB TYPE TO ANOTHER SHALL BE A MINIMUM LENGTH OF 3.0m
D. ALL DIMENSIONS ARE IN MILLIMETERS

2 C.I.P. CONCRETE CURB
A100 L100
1:10

ONTARIO ASSOCIATION OF ARCHITECTS
KEVIN ARTHUR HUMENIUK
LICENCE
7162
2013-10-10

PROVINCE OF MANITOBA
SMITH CARTER ARCHITECTS AND ENGINEERS INCORPORATED
No.002
APPROVED ARCHITECTURAL CORPORATION

Publics Works and Government Services Canada / Travaux publics et services gouvernementaux Canada

Canada

Contractor to verify all dimensions & conditions on site and immediately notify the engineer of all discrepancies.

revisions	description	date
1	ISSUED FOR ADDENDUM 03	2014/02/04

A detail no. / no. du detail
B location drawing no. / sur dessin no.
C drawing no. / dessin no.

project / projet
SIR FREDERICK BANTING RESEARCH CENTRE
ANIMAL TO WET LAB CONVERSION
251 SIR FREDERICK BANTING WAY, ON

drawing / dessin
PARTIAL GRADING PLAN & REVISED CONCRETE CURB DETAIL

Designed By	I.GIANNINI	Conçu par
Date		(yyyy/mm/dd)
Drawn By	I.GIANNINI	Dessiné par
Date	2013 02 01	(yyyy/mm/dd)
Reviewed By		Examiné par
Date		(yyyy/mm/dd)
Approved By		Approuvé par
Date		(yyyy/mm/dd)
Tender		Soumission
Project Manager		Administrateur de projets
Project no.	R.044033.002	No. du projet
Drawing no.	L100-R1	No. du dessin

PWGSC 11X17 (431x279)