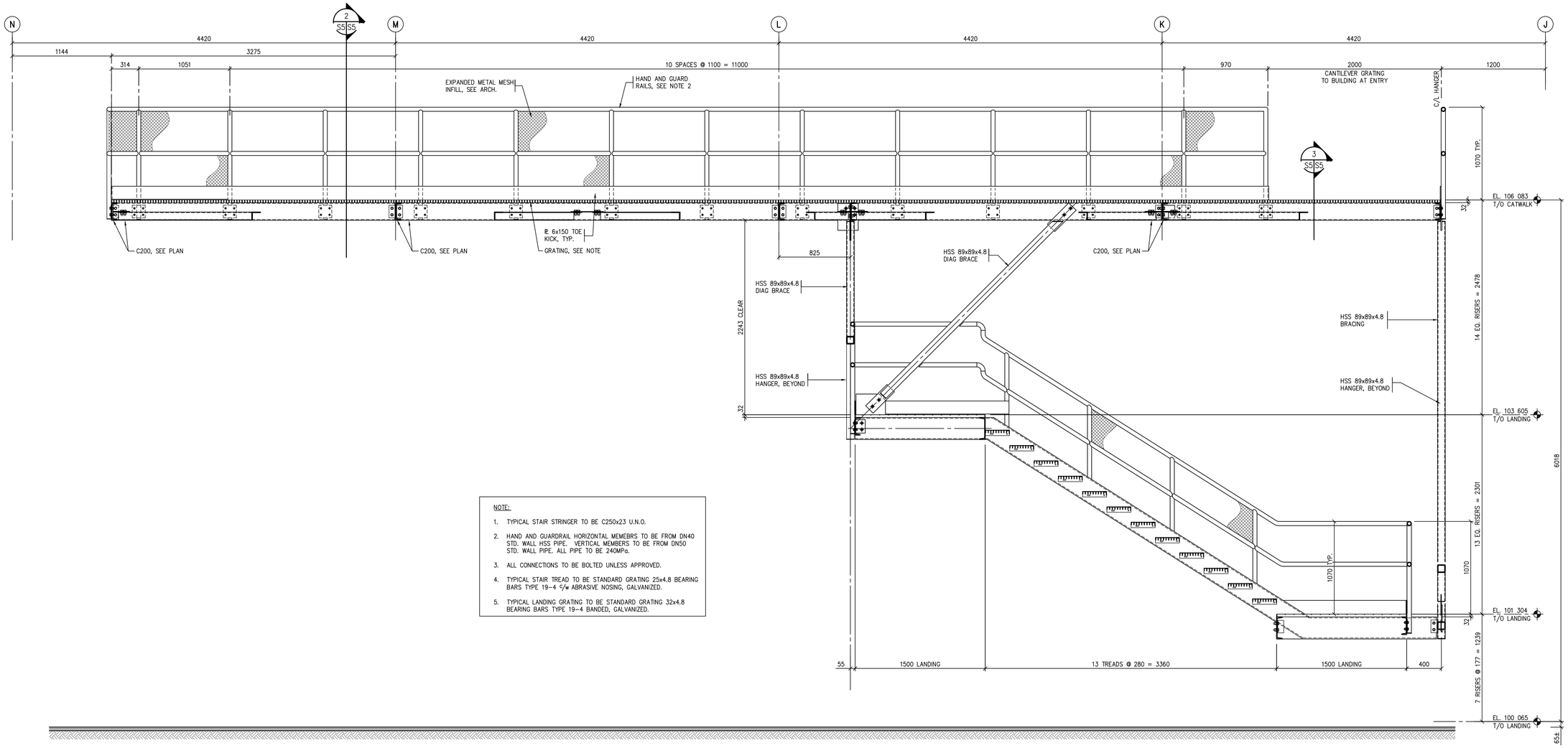

NOTE:

1. TYPICAL STAIR STRINGER TO BE C250x23 U.N.O.
2. HAND AND GUARDRAIL HORIZONTAL MEMEBRS TO BE FROM DN40 STD. WALL HSS PIPE. VERTICAL MEMBERS TO BE FROM DN50 STD. WALL PIPE. ALL PIPE TO BE 240MPa.
3. ALL CONNECTIONS TO BE BOLTED UNLESS APPROVED.
4. TYPICAL STAIR TREAD TO BE STANDARD GRATING 25x4.8 BEARING BARS TYPE 19-4 c/w ABRASIVE NOSING, GALVANIZED.
5. TYPICAL LANDING GRATING TO BE STANDARD GRATING 32x4.8 BEARING BARS TYPE 19-4 BANDED, GALVANIZED.

1 S1 S5 SECTION THRU CATWALK
1:20

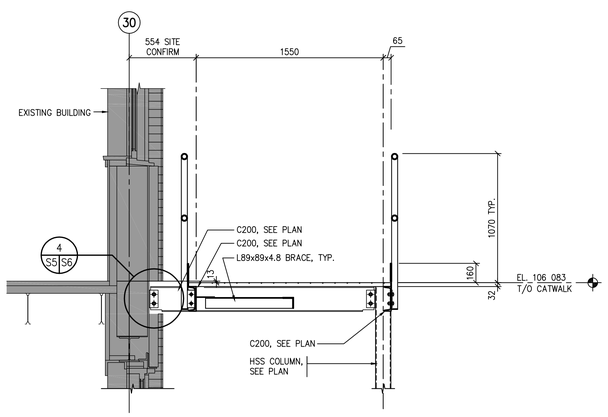

2 S1 S5 SECTION
1:20

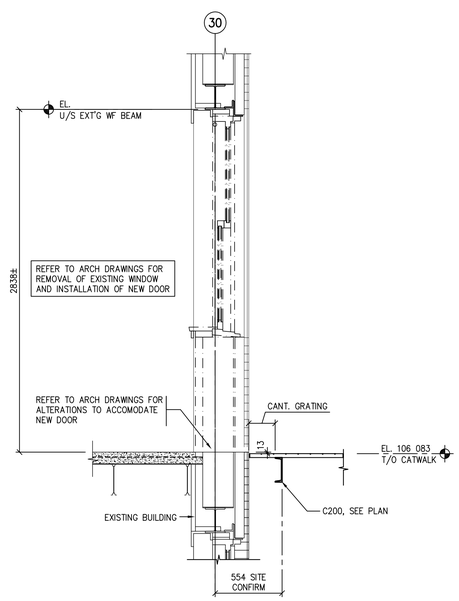

3 S1 S5 SECTION
1:20

0 10 20 30 40 50 60 70 80 90 100mm

STRUCTURAL ENGINEERS
BROWNLEE BEATON KREKE
SUITE 400 • 4010 PASQUA STREET • REGINA • SK • S4S 7B9
TEL: (306) 584-8833 • EMAIL: bbkregina@bbkeng.ca

PROFESSIONAL ENGINEER SASKATCHEWAN
S.C. KILBACK
MEMBER 12171
2014 01 17
YR. MN. DAY

Association of Professional Engineers & Geoscientists of Saskatchewan
CERTIFICATE OF AUTHORIZATION
BROWNLEE BEATON KREKE (REGINA) LTD.
NUMBER 525
PERMISSION TO CONSULT HELD BY:

DISCIPLINE	SASK. REG No.	SIGNATURE
STRUCTURAL	12171	SCK

Revision/ Revision	Description/Description	Date/Date
0	ISSUED FOR TENDER	2014-01-17

Client/client

Project title/Titre du projet
REGINA, SK

SHARED LEARNING FACILITY

Approved by/Approuvé par

Designed by/Concept par
SK

Drawn by/Dessiné par
CS / DL

Project Manager/Administrateur de Projets
AC

Architectural and Engineering Resources Manager/ Ressources Architectural et Ge Directeur d'Ingénierie

Client/client

Drawing title/Titre du dessin
CATWALK & STAIR SECTIONS

Project No./No. du projet	Sheet/ Feuille	Revision no./ La Révision no.
05-2013	S5	0

BBK Drawing file: 83800-S4.dwg