DRAWING NOTES

1. 19mm [3/4"]THICK WALNUT VENEERED PARTICLE BOARD PEDESTAL CLADDING WITH MITRED, BISCUIT REINFORCED AND GLUED JOINTS
2. HARDWOOD BLOCKING
3. SOLID WALNUT BAND, OCTAGONAL SHAPE WITH BEAD PROFILE ON EXPOSED FACES
4. METAL BASE, FINISH AS SPECIFIED. TO BE SINGLE COLOUR TO CONTRACTING AUTHORITIES SELECTION
5. 25mm [1"] THICK WALNUT VENEERED PARTICLE BOARD TOP WITH SOLID WALNUT EDGE
6. HIDDEN SCREW FASTENERS OR ALTERNATIVE HIDDEN FASTENING SYSTEM AS RECOMMENDED BY FURNITURE MANUFACTURER
7. WELD CONNECTION
8. METAL TOP MOUNTING PLATE, FINISH AS SPECIFIED
9. METAL TUBE PEDESTAL, FINISH AS SPECIFIED
10. SOLID WALNUT EDGE
11. WOOD SCREW FASTENERS SET FLUSH

WRITTEN FURNITURE SPECIFICATIONS TO TAKE PRECEDENCE OVER DRAWING NOTES

GENERAL NOTES

A. REFER TO SPECIFICATION FOR FINISHING OF ALL WALNUT VENEER SURFACES..

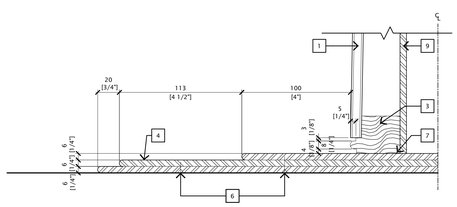

5 / CW-11 TABLE BASE DETAIL
SCALE 1:2

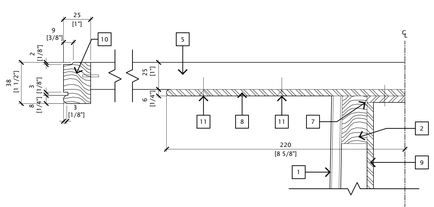

4 / CW-11 TABLE TOP DETAIL
SCALE 1:2

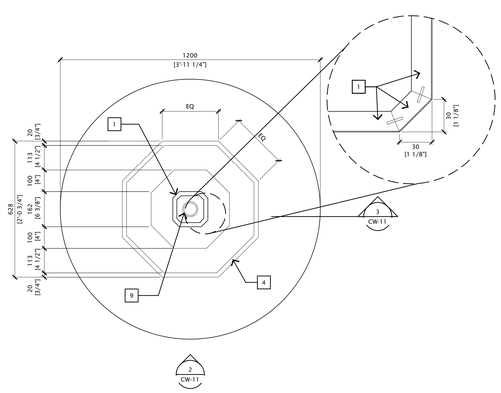

3 / CW-11 MP MEETING TABLE PLAN
SCALE 1:10

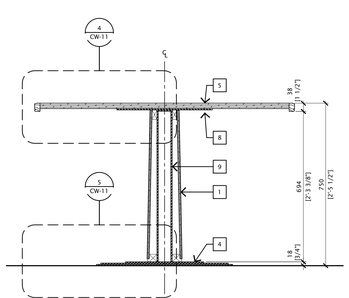

2 / CW-11 MP MEETING TABLE SECTION
SCALE 1:10

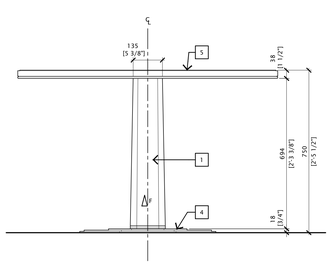

1 / CW-11 MP MEETING TABLE FRONT ELEVATION
SCALE 1:10

Publics Works and Government Services Canada
Travaux publics et Services gouvernementaux Canada

Canada

Parliamentary Precinct Branch
107 Sparks Street
Ottawa, Ontario
K1A 0S5

Direction générale de la Cité parlementaire
107 rue Sparks
Ottawa, Ontario
K1A 0S5

NORR Limited
An Ingenium Group Company

175 Bloor St. East
North Tower, 15th Floor
Toronto, ON, Canada M4W 3R8
www.norr.com

NORR
ARCHITECTS ENGINEERS PLANNERS

This drawing shall not be used for construction purposes until the seal appearing hereon is signed and dated by the Architect or Engineer.

revision		date
6	ISSUED FOR RFP	2013-11-14

A detail no. no. du détail
B location drawing no. no. de localisation
C drawing no. no. du dessin

project / projet
WELLINGTON BUILDING RENOVATION

180 WELLINGTON STREET
OTTAWA, ONTARIO

drawing / dessin
MP MEETING TABLE (CW-11) PLAN's, EL's, & SECT's

Designed By	NORR Toronto	Conçu par
Date	2010/03/01	(yyyy/mm/dd)
Drawn By	NORR Toronto	Dessiné par
Date	2010/10/01	(yyyy/mm/dd)
Reviewed By	M.DELEAN	Examiné par
Date	2011/03/21	(yyyy/mm/dd)
Approved By	S.BALDASSARRA	Approuvé par
Date	2011/03/21	(yyyy/mm/dd)
Tender		Soumission
Project Manager	S. LEPAGE	Administrateur de projets

Project no. / No. du projet: R.009790.059

Drawing no. / No. du dessin: CW-11

PRINTED: 20 March 2014 - 2:56 PM BY: Lizanne Dubien