Public Works and Government Services Canada

Travaux publics et Services gouvernementaux Canada

RETURN BIDS TO:
RETOURNER LES SOUMISSIONS À:

Bid Receiving - PWGSC / Réception des soumissions - TPSGC
11 Laurier St. / 11, rue Laurier
Place du Portage , Phase III
Core 0A1 / Noyau 0A1
Gatineau
Québec
K1A 0S5
Bid Fax: (819) 997-9776

REQUEST FOR PROPOSAL
DEMANDE DE PROPOSITION

Proposal To: Public Works and Government Services Canada

We hereby offer to sell to Her Majesty the Queen in right of Canada, in accordance with the terms and conditions set out herein, referred to herein or attached hereto, the goods, services, and construction listed herein and on any attached sheets at the price(s) set out therefor.

Proposition aux: Travaux Publics et Services Gouvernementaux Canada

Nous offrons par la présente de vendre à Sa Majesté la Reine du chef du Canada, aux conditions énoncées ou incluses par référence dans la présente et aux annexes ci-jointes, les biens, services et construction énumérés ici sur toute feuille ci-annexée, au(x) prix indiqué(s).

Comments - Commentaires

Title - Sujet
BUOY TENDING SERVICES

Solicitation No. - N° de l'invitation	**Date**
FP999-130002/B	2014-04-22

Client Reference No. - N° de référence du client
FP999-130002

GETS Reference No. - N° de référence de SEAG
PW-$$ML-024-24444

File No. - N° de dossier	**CCC No./N° CCC - FMS No./N° VME**
024ml.FP999-130002	

Solicitation Closes - L'invitation prend fin
at - à 02:00 PM
on - le 2014-06-09

Time Zone
Fuseau horaire
Eastern Daylight Saving Time EDT

F.O.B. - F.A.B. Specified Herein - Précisé dans les présentes
Plant-Usine: ☐ **Destination:** ☐ **Other-Autre:** ☑

Address Enquiries to: - Adresser toutes questions à:	**Buyer Id - Id de l'acheteur**
Giguère, Réjean	024ml

Telephone No. - N° de téléphone	**FAX No. - N° de FAX**
(418) 648-5428 ( )	( ) -

Destination - of Goods, Services, and Construction:
Destination - des biens, services et construction:
See herein.
Voir ci-joint.

Instructions: See Herein

Instructions: Voir aux présentes

Vendor/Firm Name and Address
Raison sociale et adresse du fournisseur/de l'entrepreneur

Delivery Required - Livraison exigée	**Delivery Offered - Livraison proposée**
See Herein	

Vendor/Firm Name and Address
Raison sociale et adresse du fournisseur/de l'entrepreneur

Telephone No. - N° de téléphone
Facsimile No. - N° de télécopieur

Name and title of person authorized to sign on behalf of Vendor/Firm (type or print)
Nom et titre de la personne autorisée à signer au nom du fournisseur/ de l'entrepreneur (taper ou écrire en caractères d'imprimerie)

Signature **Date**

Issuing Office - Bureau de distribution
Marine Machinery and Services / Machineries et services maritimes
11 Laurier St. / 11, rue Laurier
6C2, Place du Portage
Gatineau
Québec
K1A 0S5

Canada

TABLE OF CONTENTS

List of Annexes:

Annex ''A'' Statement of Work

Appendix A.1 Buoy Positioning Procedure
Appendix A.2 Example of Buoy Data Cards
Appendix A.3 Example of Buoy Service Report (B.S.R.)
Appendix A.4 Guidelines of Safe Handling of Buoys

Appendix B Buoy Information Drawing/Data

Appendix C List of Buoys by Contract Area

Appendix C.1 Western Region, W-1 to W-11
Appendix C.2 Central & Arctic Regions, C-1 to C-45
Appendix C.3 Atlantic Region, A-1 to A-76

Appendix D Supplementary Buoy Information

Annex ''B'' Basis of Payment

Annex ''C'' Federal Contractors Program for Employment Equity - Certification

Annex ''D'' Technical Bid

Annex ''E'' Financial Bid

BUOY TENDING SERVICES

PART 1 - GENERAL INFORMATION

1. Security Requirement

There is no security requirement associated with this bid solicitation.

2. Statement of Work

Canadian Coast Guard (CCG) requires across Canada, tending of buoys, including servicing, decommissioning, commissioning, storage and transportation, all in accordance with Annex ‘’A’’, Statement of Work.

The Contract is to cover an initial period of five (5) years plus one (1) additional option period of one (1) year.

Bidders must provide firm lot prices for each year as per the Annex “E”, Financial Bid.

Bidders must complete one (1) Financial bid sheet per Contract Sub-Area they wish to bid on. In the absence of Sub-Areas, Bidders must bid on the Contract Area.

Canada will not accept any bid that combines more than one (1) Contract Area or Sub-Area.

To the extent possible, all contracts will be awarded simultaneously for all areas and sub-areas, even if the Work in some areas or sub-areas may only begin in two (2) years. This is due to the fact that some areas or sub-areas will be under contract until June 2016 and Canada intends to standardize the issuance of its buoy tending contracts across the country.

3. Debriefings

Bidders may request a debriefing on the results of the bid solicitation process. Bidders should make the request to the Contracting Authority within 15 working days of receipt of the results of the bid solicitation process. The debriefing may be in writing, by telephone or in person.

4. Trade Agreements

The requirement is subject to the provisions of the World Trade Organization Agreement on Government Procurement (WTO-AGP), the North American Free Trade Agreement (NAFTA) and the Agreement on Internal Trade (AIT).

PART 2 - BIDDER INSTRUCTIONS

1. Standard Instructions, Clauses and Conditions

All instructions, clauses and conditions identified in the bid solicitation by number, date and title are set out in the *Standard Acquisition Clauses and Conditions Manual*. (https://buyandsell.gc.ca/policy-and-guidelines/standard-acquisition-clauses-and-conditions-manual) issued by Public Works and Government Services Canada.

Bidders who submit a bid agree to be bound by the instructions, clauses and conditions of the bid solicitation and accept the clauses and conditions of the resulting contract.

The 2003 (2014-03-01) Standard Instructions - Goods or Services - Competitive Requirements, are incorporated by reference into and form part of the bid solicitation.

Subsection 4 of Section 5, Submission of Bids Standard Instructions 2003, is amended as follows:

Delete: sixty (60) days

Insert: one hundred and twenty (120) days

1.1 Insurance Requirements

The Bidder must provide a letter from an insurance broker or an insurance company licensed to operate in Canada stating that the Bidder, if awarded a contract as a result of the bid solicitation, can be insured in accordance with the Insurance Requirements specified in Part 6, Article 12, Marine Liability Insurance.

If the information is not provided in the bid, the Contracting Authority will so inform the Bidder and provide the Bidder with a time frame within which to meet the requirement. Failure to comply with the request of the Contracting Authority and meet the requirement within that time period will render the bid non-responsive.

2. Submission of Bids

Bids must be submitted only to Public Works and Government Services Canada (PWGSC) Bid Receiving Unit below by the date and time indicated on page 1 of the RFP.

Bid Receiving Unit
Public Works and Government Services Canada
11 Laurier Street
Gatineau, Québec, K1A 0S5
Fax: (819) 956-9776

3. Former Public Servant - Competitive Requirements

Contracts awarded to former public servants (FPS) in receipt of a pension or of a lump sum payment must bear the closest public scrutiny, and reflect fairness in the spending of public funds. In order to comply with Treasury Board policies and directives on contracts awarded to FPS, bidders must provide the information required below before contract award. If the answer to the questions and, as applicable the information required have not been received by the time the evaluation of bids is completed, Canada will inform the Bidder of a time frame within which to provide the information. Failure to comply with Canada's request and meet the requirement within the prescribed time frame will render the bid non-responsive.

Definitions

For the purposes of this clause,""former public servant"" is any former member of a department as defined in the Financial Administration Act, R.S., 1985, c. F-11, a former member of the Canadian Armed Forces or a former member of the Royal Canadian Mounted Police. A former public servant may be:

a. an individual;
b. an individual who has incorporated;
c. a partnership made of former public servants; or
d. a sole proprietorship or entity where the affected individual has a controlling or major interest in the entity.

""lump sum payment period"" means the period measured in weeks of salary, for which payment has been made to facilitate the transition to retirement or to other employment as a result of the implementation of various programs to reduce the size of the Public Service. The lump sum payment period does not include the period of severance pay, which is measured in a like manner.

""pension"" means a pension or annual allowance paid under the Public Service Superannuation Act (PSSA), R.S., 1985, c.P-36, and any increases paid pursuant to the Supplementary Retirement Benefits Act, R.S., 1985, c.S-24 as it affects the PSSA. It does not include pensions payable pursuant to the Canadian Forces Superannuation Act, R.S., 1985, c.C-17, the Defence Services Pension Continuation Act, 1970, c.D-3, the Royal Canadian Mounted Police Pension Continuation Act , 1970, c.R-10, and the Royal Canadian Mounted Police Superannuation Act, R.S., 1985, c.R-11, the Members of Parliament Retiring Allowances Act , R.S., 1985, c.M-5, and that portion of pension payable to the Canada Pension Plan Act, R.S., 1985, c.C-8.

Former Public Servant in Receipt of a Pension

As per the above definitions, is the Bidder a FPS in receipt of a pension? **Yes (__) No (__)**

If so, the Bidder must provide the following information, for all FPS in receipt of a pension, as applicable:

a. name of former public servant;
b. date of termination of employment or retirement from the Public Service.

By providing this information, Bidders agree that the successful Bidder's status, with respect to being a former public servant in receipt of a pension, will be reported on departmental websites as part of the published proactive disclosure reports in accordance with Contracting Policy Notice: 2012-2 and the Guidelines on the Proactive Disclosure of Contracts.

Work Force Adjustment Directive

Is the Bidder a FPS who received a lump sum payment pursuant to the terms of the Work Force Adjustment Directive? **Yes (__) No (__)**

If so, the Bidder must provide the following information:

a. name of former public servant;
b. conditions of the lump sum payment incentive;
c. date of termination of employment;
d. amount of lump sum payment;
e. rate of pay on which lump sum payment is based;
f. period of lump sum payment including start date, end date and number of weeks; and
g. number and amount (professional fees) of other contracts subject to the restrictions of a work force adjustment program.

For all contracts awarded during the lump sum payment period, the total amount of fees that may be paid to a FPS who received a lump sum payment is $5,000, including Applicable Taxes.

4. Enquiries - Bid Solicitation

All enquiries must be submitted in writing to the Contracting Authority no later than ten (10) calendar days before the bid closing date. Enquiries received after that time may not be answered.

Bidders should reference as accurately as possible the numbered item of the bid solicitation to which the enquiry relates. Care should be taken by bidders to explain each question in sufficient detail in order to enable Canada to provide an accurate answer. Technical enquiries that are of a proprietary nature must be clearly marked "proprietary" at each relevant item. Items identified as "proprietary" will be treated as such except where Canada determines that the enquiry is not of a proprietary nature. Canada may edit the questions or may request that the Bidder do so, so that the proprietary nature of the question is eliminated, and the enquiry can be answered with copies to all bidders. Enquiries not submitted in a form that can be distributed to all bidders may not be answered by Canada.

5. Applicable Laws

Any resulting contract must be interpreted and governed, and the relations between the parties determined, by the laws in force in Ontario.

Bidders may, at their discretion, substitute the applicable laws of a Canadian province or territory of their choice without affecting the validity of their bid, by deleting the name of the Canadian province or territory specified and inserting the name of the Canadian province or territory of their choice. If no change is made, it acknowledges that the applicable laws specified are acceptable to the bidders.

PART 3 - BID PREPARATION INSTRUCTIONS

1. Bid Preparation Instructions

Canada requests that bidders provide their bid in separately bound sections as follows:

Vol	Title	Hard Copy Quantity	Soft Copy Quantity
1	Technical Bid	3	1
2	Financial Bid and Certifications	1	0

1.1 Prices must appear in the financial bid only. No prices must be indicated in any other section of the bid.

1.2 In case of discrepancy between the wording of the paper and the electronic copy of the documents, the wording of the paper copy will take precedence. The paper copies shall be numbered and the copy that bears the number 1 will be treated as master copy and will take precedence over the other ones should there be any discrepancy between copies. Electronic copy of the bid shall be in MS WORD 2003 format.

1.3 Canada requests that bidders follow the format instructions described below in the preparation of their bid:

(a) use 8.5 x 11 inch (216 mm x 279 mm) paper; and
(b) use a numbering system that corresponds to the bid solicitation.

1.4 In April 2006, Canada issued a policy directing federal departments and agencies to take the necessary steps to incorporate environmental considerations into the procurement process Policy on Green Procurement. (http://www.tpsgc-pwgsc.gc.ca/ecologisation-greening/achats-procurement/politique-policy-eng.html). To assist Canada in reaching its objectives, bidders should:

1) use 8.5 x 11 inch (216 mm x 279 mm) paper containing fibre certified as originating from a sustainably-managed forest and containing minimum 30% recycled content; and

2) use an environmentally-preferable format including black and white printing instead of colour printing, printing double sided/duplex, using staples or clips instead of cerlox, duotangs or binders.

Section I: Technical Bid, Volume 1

In their technical bid, bidders should demonstrate their understanding of the technical requirements contained in the bid solicitation and explain how they will meet these requirements. Bidders should demonstrate their capability and describe their approach in a thorough, concise and clear manner for carrying out the work.

The technical bid should address clearly and in sufficient depth the points that are subject to the evaluation criteria against which the bid will be evaluated. Simply repeating the statement contained in the bid solicitation is not sufficient. In order to facilitate the evaluation of the bid, Canada requests that

bidders address and present topics in the order of the evaluation criteria under the same headings. To avoid duplication, bidders may refer to different sections of their bids by identifying the specific paragraph and page number where the subject topic has already been addressed.

The Technical Bid shall include a duly completed Annex "D", Technical Bid supported by copies of all certificates, related documentation and signed. Bidders must demonstrate how they meet each Mandatory Technical Criteria of the RFP.

Section II: Financial Bid and Certifications, Volume 2

Bidders must submit their financial bid in accordance with Annex "E", Financial Bid. The Financial Bid **must include a price for every box** in Annex "E", except as otherwise indicated in Annex "A", Statement of Work.

For Contract Areas and Sub-Areas currently under contract as indicated in the Appendices of Annex "A", Bidders are to submit prices only for the period following the expiry dates of the existing contracts. **Bidders shall complete the appropriate Financial Bid form as indicated in Annex "E", either E-1, E-2 or E-3**.

When applicable, for an Item or a Sub-Item, such as Item 1-D of Annex "E", the annual variation of the Firm Lot Prices shall not exceed 3% for all the years bid.

As an example, if at Item 1-D, Commissioning, if the bid price in year 1 is $1,000, the bid price in year 2 shall not be higher than $1,030 and in year 3, $1,060.90.

All prices must be in Canadian dollars, Applicable Taxes excluded, FOB destination, Canadian customs duties and excise taxes included. The total amount of Applicable taxes must be shown separately in Annex "E", but will not be used for evaluation purposes.

Canada requests that Bidders complete one (1) Financial bid sheet, Annex "E" per Contract Sub-Area that they wish to bid on. In the absence of Contract Sub-Areas, Bidders must bid on the Contract Area.

Canada will not accept any Financial bid that combines more than one (1) Contract Area or Sub-Area.

As an example, Area C-1 has two (2) Sub-Areas: A and B. Bidders must submit a Financial Bid sheet by sub-area: C-1A and/or C-1B.

As a second example, C-2 has no Sub-Area, for that reason, only one (1) Financial Bid sheet would be completed.

All Firm Lot Prices quoted by the Bidders must be all inclusive, including but not limited to Travel and Living expenses.

As per Section 9 of the SOW, Familiarization, CCG will provide a one (1) day Familiarization session that all new Contractors must attend. Contractors will be responsible for all associated costs, including travel and living.

For vessels leased by the bidder, proof stating that coverage is inline with the insurance requirement listed in Part 6, Article 12, Marine Liability Insurance, must be obtained from the owner's insurance company.

In the event that Decommissioning is not required in year one (1), even if quoted upon, no work will be conducted or paid for.

The Financial Bid and Certifications shall include:

(a) the full legal name of the Bidder;
(b) the name of a company representative, their telephone and facsimile numbers as well as their email address, to be the contact person in the event that clarification of their bid is required;
(c) duly completed and signed Annex "E", Financial Bid; and
(d) duly completed and signed Certifications as required under Part 5 and Annex "C".

1.5 Exchange Rate Fluctuation

C3011T (2013-11-06), Exchange Rate Fluctuation.

PART 4 - EVALUATION PROCEDURES AND BASIS OF SELECTION

1. Evaluation Procedures

(a) Bids will be assessed in accordance with the entire requirement of the bid solicitation including the technical and financial evaluation criteria.

(b) An evaluation team composed of representatives of Canada will evaluate the bids.

1.1 Technical Evaluation

1.1.1 Mandatory Technical Criteria

The Mandatory Technical Criteria are as detailed in Annex “D”, Technical Bid.

1.2 Financial Evaluation

The price of the bid must be presented in Canadian dollars, Applicable Taxes excluded, FOB destination, Canadian customs duties and excise taxes included.

2. Basis of Selection

2.1 To be declared responsive, a bid must:

(a) comply with all the requirements of the bid solicitation;

(b) meet all Mandatory Technical Evaluation Criteria; and

(c) meet all Financial Bid Criteria. **As appropriate, one (1) of the three (3) Financial Bid forms, either “E-1”, “E-2” or “E-3” is to be used.**

2.2 Bids not meeting 2.1 (a), (b) or (c) will be declared non-responsive.

2.3 <u>For Financial BID “E-1”</u>, for each bidder who submitted a bid on a Contract area or sub-area, Canada will select the lowest price between "Total: ITEM 1 (A+B+C+D) + ITEM 2, for three (3) years:" <u>versus</u> "Total: ITEM 1 (A+B+C+D) + ITEM 3, for three (3) years".

2.4 <u>For Financial BID “E-2”</u>, for each bidder who submitted a bid on a Contract area or sub-area, Canada will select the lowest price between "Total: ITEM 1 (A+B+C+D) + ITEM 2, for two (2) years:" <u>versus</u> "Total: ITEM 1 (A+B+C+D) + ITEM 3, for two (2) years".

2.5 <u>For Financial BID “E-3”</u>, for each bidder who submitted a bid on a Contract area or sub-area, Canada will select the lowest price between "Total: ITEM 1 (A+B+C+D) + ITEM 2, for one (1) year:" <u>versus</u> "Total: ITEM 1 (A+B+C+D) + ITEM 3, for one (1) year".

2.6 Following the selection made in Article 2.3, 2.4 and 2.5 above, for each zone and sub-zone the responsive bid with the Lowest Price will be recommended for Contract award.

PART 5 - CERTIFICATIONS

Bidders must provide the required certifications and associated information to be awarded a contract.

The certifications provided by bidders to Canada are subject to verification by Canada at all times. Canada will declare a bid non-responsive, or will declare a contractor in default in carrying out any of its obligations under the Contract, if any certification made by the Bidder is found to be untrue whether made knowingly or unknowingly, during the bid evaluation period or during the contract period.

The Contracting Authority will have the right to ask for additional information to verify the Bidder's certifications. Failure to comply and to cooperate with any request or requirement imposed by the Contracting Authority may render the bid non-responsive or constitute a default under the Contract.

1. Certifications Required Precedent to Contract Award

1.1 Integrity Provisions - Associated Information

By submitting a bid, the Bidder certifies that the Bidder and its Affiliates are in compliance with the provisions as stated in Section 01 Integrity Provisions - Bid of Standard Instructions 2003. The associated information required within the Integrity Provisions will assist Canada in confirming that the certifications are true.

1.2 Federal Contractors Program for Employment Equity - Bid Certification

By submitting a bid, the Bidder certifies that the Bidder, and any of the Bidder's members if the Bidder is a Joint Venture, is not named on the Federal Contractors Program (FCP) for employment equity "FCP Limited Eligibility to Bid" list (http://www.labour.gc.ca/eng/standards_equity/eq/emp/fcp/list/inelig.shtml) available from Employment and Social Development Canada (ESDC) - Labour's website.

Canada will have the right to declare a bid non-responsive if the Bidder, or any member of the Bidder if the Bidder is a Joint Venture, appears on the "FCP Limited Eligibility to Bid " list at the time of contract award.

Canada will also have the right to terminate the Contract for default if a Contractor, or any member of the Contractor if the Contractor is a Joint Venture, appears on the "FCP Limited Eligibility to Bid" list during the period of the Contract.

The Bidder must provide the Contracting Authority with a completed Annex "C" Federal Contractors Program for Employment Equity - Certification, before contract award. If the Bidder is a Joint Venture, the Bidder must provide the Contracting Authority with a completed Annex "C" Federal Contractors Program for Employment Equity - Certification, for each member of the Joint Venture.

PART 6 - RESULTING CONTRACT CLAUSES

1. Security Requirement

There is no security requirement applicable to this Contract.

2. Statement of Work

The Contractor must perform the Work in accordance with Annex "A", Statement of Work.

Canadian Coast Guard (CCG) requires across Canada, tending of buoys, including servicing, decommissioning, commissioning, storage and transportation, all in accordance with Annex ''A'', Statement of Work.

2.1 Additional Work

a. The Contractor hereby acknowledges that Canada may require the Contractor, on an as and when required basis, to perform Additional Work.

b. The Contractor shall perform the Additional Work under the same terms and conditions of the Contract.

3. Standard Clauses and Conditions

All clauses and conditions identified in the Contract by number, date and title are set out in the *Standard Acquisition Clauses and Conditions Manual* (https://buyandsell.gc.ca/policy-and-guidelines/standard-acquisition-clauses-and-conditions-manual) issued by Public Works and Government Services Canada.

3.1 General Conditions

2010C (2014-03-01) General Conditions - Services (Medium Complexity) apply to and form part of the Contract.

4. Term of Contract

4.1 Period of the Contract

The Work is to be performed during the period from the date of Contract award to July 01, 2019 inclusive.

4.2 Option to Extend the Contract

The Contractor grants to Canada the irrevocable option to extend the term of the Contract by up to one (1) additional one (1) year period under the same conditions. The Contractor agrees that, during the extended period of the Contract, it will be paid in accordance with the applicable provisions as set out in the Basis of Payment.

Canada may exercise this option at any time by sending a written notice to the Contractor at least 30 calendar days before the expiry date of the Contract. The option may only be exercised by the Contracting Authority, and will be evidenced for administrative purposes only, through a contract amendment.

5. Authorities

5.1 Contracting Authority

The Contracting Authority for the Contract is:

Réjean Giguère
Supply Team Leader
Public Works and Government Services Canada
101 Champlain Blvd, Québec City, Québec
G1K 7Y7
Telephone: 418-648-5428
Email: rejean.giguere@tpsgc-pwgsc.gc.ca

The Contracting Authority is responsible for the management of the Contract and any changes to the Contract must be authorized in writing by the Contracting Authority. The Contractor must not perform work in excess of or outside the scope of the Contract based on verbal or written requests or instructions from anybody other than the Contracting Authority.

5.2 Project Authority

The Project Authority for the Contract is (to be identified at contract award):

Name : _____
Title : _____
Organization : _____

Address : _____
_____
_____

Telephone : ___ ___ _____
Facsimile : ___ ___ _____
E-mail address : _____

The Project Authority is the representative of the department or agency for whom the Work is being carried out under the Contract and is responsible for all matters concerning the technical content of the

Work under the Contract. Technical matters may be discussed with the Project Authority; however the Project Authority has no authority to authorize changes to the Scope of the Work. Changes to the scope of the Work can only be made through a contract amendment issued by the Contracting Authority.

5.3 Contractor's Representative

Name : _____
Title : _____

Address : _____
_____
_____

Telephone : ___ ___ _____
Facsimile : ___ ___ _____
E-mail address : _____

6. Proactive Disclosure of Contracts with Former Public Servants

By providing information on its status, with respect to being a former public servant in receipt of a *Public Service Superannuation Act* (PSSA) pension, the Contractor has agreed that this information will be reported on departmental websites as part of the published proactive disclosure reports, in accordance with Contracting Policy Notice: 2012-2 of the Treasury Board Secretariat of Canada.

7. Payment

7.1 Basis of Payment – Firm Lot Price

In consideration of the Contractor satisfactorily completing its obligations under the Contract, the Contractor will be paid Firm Lot Prices as outlined in Annex "B", Basis of Payment.

In the event that Decommissioning is not required in year one (1), even if quoted upon, no work will be conducted or paid for.

For Additional Work not specified in the Statement of Work but related to the Scope of Work, the Contractor will be requested, on an as and when required basis, to supply a detailed quote for the work required and will be paid a firm price accordingly. The quote will include the level of effort, hourly rate, costs for parts, sub-contracts and any other costs.

As per Section 9, Familiarization, of the SOW, CCG will provide a one (1) day Familiarization session that all new Contractors must attend. Contractors will be responsible for all associated costs, including travel and living expenses.

All prices are in Canadian dollars, Applicable Taxes excluded, FOB destination, Canadian customs duties and excise taxes included.

7.2 Limitation of Price

SACC Manual clause C6000C (2011-05-16) Limitation of Price

7.3 Method of Payment

1. Following the **delivery and acceptance of the Commissioning** by Canada, the Contractor shall be paid the following as per Annex “B”, Basis of Payment:

   - Commissioning Firm Lot Price;
   - Half (1/2) the Firm Lot Price of the Unscheduled Servicing;
   - Half (1/2) the Firm Lot Price of the Scheduled Servicing;
   - Half (1/2) of Item 2 or Item 3 (to be selected at Bid Evaluation)

   This payment will only be made once a year.

2. Following the **delivery and acceptance of the Decommissioning** by Canada, the Contractor shall be paid the following as per Annex “B”, Basis of Payment:

   - Decommissionning Firm Lot Price;
   - Half (1/2) the Firm Lot Price for Unscheduled Servicing;
   - Half (1/2) the Firm Lot Price for Scheduled Servicing;
   - Half (1/2) of Item 2 or Item 3 (to be selected at Bid Evaluation)

   This payment will only be made once a year.

3. Following the delivery and acceptance of the Additional Work, the Contractor shall be paid the Firm Price quoted.

4. Additional Work will be invoiced separately.

5. Canada will pay the Contractor upon completion and acceptance of the Work in accordance with the payment provisions of the Contract if:

   a. an accurate and complete invoice and any other documents required by the Contract have been submitted in accordance with the invoicing instructions; and

   b. all documents have been accepted by Canada.

7.4 Consumer Price Index (CPI)

Beyond year three (3) of the Contract, all Firm Lot Prices as indicated in Annex “B”, Basis of Payment, are subject to economic price adjustments to account for actual economic fluctuations.

The Yearly Firm Lot Price adjustment will be based on the Consumer Price Index, 2000 to Present, as published on the Bank of Canada web site; http://www.bankofcanada.ca/rates/price-indexes/cpi/. In this table, the column “Core CPI” must be used for all calculations.

Before the beginning of the fourth, fifth and sixth Contract year, a contract amendment will be issued to adjust the Firm Lot Prices in the Annex “B”, Basis of Payment, and they shall be applicable for the coming twelve (12) months.

The Firm Lot Price (FLP) economic price adjustment for the fourth, fifth and sixth Contract year shall be calculated as follows:

FLP (new) = FLP (actual) x CPI (new) / CPI (actual)

FLP (new) = Is the new Firm Lot Price applicable for the coming 12 month period.

FLP (actual)= Is the actual Contract Firm Lot Price as indicated in Annex “B”, Basis of Payment.

CPI (new) = Bank of Canada Consumer Price Index (CPI) two (2) months prior to the beginning of the fourth, fifth and sixth Contract year, as applicable.

CPI (actual) = Bank of Canada Consumer Price Index (CPI) fourteen (14) months prior to the beginning of the fourth, fifth and sixth Contract year, as applicable.

In order to clarify the calculation we are providing the following example:

A contract is awarded on August 10th, 2014 and the Firm Lot Prices provided by the Bidder are copied in the Annex “B”, Basis of Payment . As indicated, at the end of the third year a calculation must be done to adjust the Firm Lot Prices for the fourth year. Since the Contract was issued in the month of August we will use the Bank of Canada CPI of the month of June. In this example the CPI (new) will be the one for June 2017 and the CPI (actual) will be the one for June 2016.

The following data is assumed:

-CPI (new) = CPI June 2017 = 126.8
-CPI (actual) = CPI June 2016 = 124.2
-FLP (actual) = FLP year 3 = $1,000.00

The new Firm Lot Price for year 4 would be:

FLP (new) = $1,000.00 x 126.8 / 124.2 = $1,020.93

8. Invoicing Instructions

a. The Contractor must submit invoices in accordance with the section entitled "Invoice Submission" of the general conditions. Invoices cannot be submitted until all work identified in the invoice is completed.

Invoices will only be paid if:

1) The Contractor has provided the biannual inventory report in accordance with Section 5.3 of Annex "A", SOW; and

2) The Contractor has provided throughout the season all copies of Buoy Service Reports (BSR) required in accordance with Section 5.4 of Annex "A", SOW.

b. Invoices must be distributed as follows:

The original must be forwarded to the address shown on page 1 of the Contract for certification and payment.

9. Certifications

9.1 Compliance

The continuous compliance with the certifications provided by the Contractor in its bid and the ongoing cooperation in providing associated information are conditions of the Contract. Certifications are subject to verification by Canada during the entire period of the Contract. If the Contractor does not comply with any certification, fails to provide the associated information, or if it is determined that any certification made by the Contractor in its bid is untrue, whether made knowingly or unknowingly, Canada has the right, pursuant to the default provision of the Contract, to terminate the Contract for default.

9.2 Federal Contractors Program for Employment Equity - Default by the Contractor

The Contractor understands and agrees that, when an Agreement to Implement Employment Equity (AIEE) exists between the Contractor and Employment and Social Development Canada (ESDC)-Labour, the AIEE must remain valid during the entire period of the Contract. If the AIEE becomes invalid, the name of the Contractor will be added to the "FCP Limited Eligibility to Bid" list. The imposition of such a sanction by ESDC will constitute the Contractor in default as per the terms of the Contract.

10. Applicable Laws

The Contract must be interpreted and governed, and the relations between the parties determined, by the laws in force in Ontario.

11. Priority of Documents

If there is a discrepancy between the wordings of any documents that appear on the list, the wording of the document that first appears on the list has priority over the wording of any document that subsequently appears on the list.

(a) The Articles of Agreement;
(b) The general conditions 2010C (2014-03-01) General Conditions - Services (Medium Complexity);
(c) Annex "A", Statement of Work (SOW);
(d) Annex "B", Basis of Payment;
(e) Annex "C", Federal Contractors Program for Employment Equity - Certification; and
(f) The Contractor's bid dated _____

12. Marine Liability Insurance

1. The Contractor must obtain Protection & Indemnity (P&I) insurance that must include excess collision liability and pollution liability. The insurance must be placed with a member of the International Group of Protection and Indemnity Associations or with a fixed market in an amount of not less than the limits determined by the Marine Liability Act, S.C. 2001, c. 6. Coverage must include crew liability, if it is not covered by Worker's Compensation as detailed in paragraph (2.) Below.

2. The Contractor must obtain Worker's Compensation insurance covering all employees engaged in the Work in accordance with the statutory requirements of the Territory or Province or state of nationality, domicile, employment, having jurisdiction over such employees. If the Contractor is assessed any additional levy, extra assessment or super-assessment by a Worker's Compensation Board, as a result of an accident causing injury or death to an employee of the Contractor or subcontractor, or due to unsafe working conditions, then such levy or assessment must be paid by the Contractor at its sole cost.

3. The Protection and Indemnity insurance policy must include the following:

   a. Additional Insured: Canada is added as an additional insured, but only with respect to liability arising out of the Contractor's performance of the Contract. The interest of Canada as additional insured should read as follows: Canada, represented by Public Works and Government Services Canada.

   b. Waiver of Subrogation Rights: Contractor's Insurer to waive all rights of subrogation against Canada as represented by Canadian Coast Guard and Public Works and Government Services Canada for any and all loss of or damage to the watercraft however caused.

   c. Notice of Cancellation: The Insurer will endeavour to provide the Contracting Authority thirty (30) days written notice of cancellation.

   d. Cross Liability/Separation of Insureds: Without increasing the limit of liability, the policy must protect all insured parties to the full extent of coverage provided. Further, the policy must apply to each Insured in the same manner and to the same extent as if a separate policy had been issued to each.

13. Maintenance of Technical Certifications

The Contractor must maintain all crew, vessel and crane certifications during the entire contract period. The Contractor must diligently inform Canada in writing of any changes affecting these certifications. If the Contractor does not maintain any of the crew, vessel or crane certifications or fails to provide the associated information, Canada has the right, pursuant to the default provision of the Contract, to terminate the Contract for default.

ANNEX "A"

STATEMENT OF WORK (SOW)

Please refer to the attached PDF document.

ANNEX "B"

BASIS OF PAYMENT

To be provided based on the Financial Bid results.

ANNEX "C" to PART 5 - BID SOLICITATION
FEDERAL CONTRACTORS PROGRAM FOR EMPLOYMENT EQUITY - CERTIFICATION

I, the Bidder, by submitting the present information to the Contracting Authority, certify that the information provided is true as of the date indicated below. The certifications provided to Canada are subject to verification at all times. I understand that Canada will declare a bid non-responsive, or will declare a contractor in default, if a certification is found to be untrue, whether during the bid evaluation period or during the contract period. Canada will have the right to ask for additional information to verify the Bidder's certifications. Failure to comply with any request or requirement imposed by Canada may render the bid non-responsive or constitute a default under the Contract.

For further information on the Federal Contractors Program for Employment Equity visit Employment and Social Development Canada (ESDC)-Labour's website.

Date:_____(YYYY/MM/DD) (If left blank, the date will be deemed to be the bid solicitation closing date.)

Complete both A and B.

A. Check only one of the following:

( ) A1. The Bidder certifies having no work force in Canada.

( ) A2. The Bidder certifies being a public sector employer.

( ) A3. The Bidder certifies being a federally regulated employer being subject to the Employment Equity Act.

( ) A4. The Bidder certifies having a combined work force in Canada of less than 100 employees (combined work force includes: permanent full-time, permanent part-time and temporary employees [temporary employees only includes those who have worked 12 weeks or more during a calendar year and who are not full-time students]).

A5. The Bidder has a combined workforce in Canada of 100 or more employees; and

( ) A5.1. The Bidder certifies already having a valid and current Agreement to Implement Employment Equity (AIEE) in place with ESDC-Labour.

OR

( ) A5.2. The Bidder certifies having submitted the Agreement to Implement Employment Equity (LAB1168) to ESDC-Labour. As this is a condition to contract award, proceed to completing the form Agreement to Implement Employment Equity (LAB1168), duly signing it, and transmit it to ESDC-Labour.

B. Check only one of the following:

( ) B1. The Bidder is not a Joint Venture.

OR

( ) B2. The Bidder is a Joint Venture and each member of the Joint Venture must provide the Contracting Authority with a completed annex Federal Contractors Program for Employment Equity - Certification. (Refer to the Joint Venture section of the Standard Instructions).

Signed :_____

ANNEX "D"

TECHNICAL BID

Company Name: _____

Mandatory Technical Criteria				
Item #	**Criteria**	**Compliant**		**Reference to applicable page and paragraph of Proposal**
		Yes	**No**	
1	All vessels used by the Bidder for this contract must be registered in Canada in accordance with the Canada Shipping Act 2001. The Bidder must provide proof of registration at bid closing.			
2	Bidder must provide proof of ownership of all vessels. In the event that the vessels are rented by the bidder, the Bidder must provide proof of rental from the owner(s) of the vessels at bid closing.			
3	Bidder must provide proof, for leased vessels, that vessel owner's insurance coverage is inline with Part 6, Article 12, Marine Liability Insurance and is transferred to the Bidder. If not, Bidder must provide proof of its own coverage, prior to Contract Award.			
4	Bidder owning the vessel(s) must provide proof of insurance coverage as per Part 6, Article 12, Marine Liability Insurance, prior to Contract Award.			
5	**If more than 15 gross tonnage**, the vessel must be registered as a workboat or tug, bidder must provide a copy of a valid ship inspection certificate issued by Transport Canada at bid closing.			
6	**In addition to the Mandatory Technical Criteria item #3, a vessel of more than 15 gross tonnage using a crane** must pass stability requirements as required by the "Hull Construction Regulations", pursuant to the Canada Shipping Act, 2001. Bidder must provide a copy of a valid certificate issued by Transport Canada prior to Contract Award.			
7	**If equal to or less than 15 gross tonnage**, the vessel must be enrolled in the Transport Canada 'Small Vessel Compliance Program' (SVCP) by bid closing. Bidder must provide proof of registration or Blue Decal certificate if available. Blue Decal			

	certification must be submitted prior to contract award. See Note 1.			
8	**In addition to the Mandatory Technical Criteria item #5, a vessel equal to or less than 15 gross tonnage using a crane** must pass stability requirements as required by the "Small Vessel Regulations", pursuant to the Canada Shipping Act, 2001. Bidder must provide a copy of a valid certificate issued by Transport Canada prior to contract award. See Note 1.			
9	Bidder must provide a copy of the crew certificates as required by the Canada Shipping Act 2001 to operate the proposed vessels at bid closing.			
10	If the bidder proposes to use a non-restricted barge, it must comply with the Canada Shipping Act, 2001, including the stability requirements as required but not limited to the "Cargo, Fumigation and Tackle Regulations". The bidder must provide a copy of the compliance certificate at Contract award.			
11	Bidder must demonstrate that they can complete the Commissioning in the required timeframe as indicated in Appendix C, for each Contract Area or Sub-Area, with the proposed vessels and crew.			
12	Bidder must demonstrate that they can complete the Decommissioning in the required timeframe as indicated in Appendix C, for each Contract Area or Sub-Area, with the proposed vessels and crew.			
13	For the Servicing, Scheduled, Bidder must demonstrate that they can complete the Work as described in Appendix C, for each Contract Area or Sub-Area within the required timeframe.			
14	For the Servicing, Unscheduled, Bidder must demonstrate readiness to respond to outages within the required timeframe.			
15	Based on the water depth listed in Appendix C, the Bidder shall demonstrate that the draught of the vessels used will allow them to operate in the different contract area(s) and sub-area(s).			

NOTE:

1 Failure to provide the documentation/certification within 14 days of Canada's request will render the bid non-compliant.

Signed :_____ **Date:**_____

ANNEX “E”

FINANCIAL BID

Please refer to the attached PDF documents.

ANNEX "A"

STATEMENT OF WORK (SOW)

FOR

BUOY TENDING SERVICES

FOR

CANADIAN COAST GUARD (CCG)

Table of Contents

APPENDICES

Appendix A Reference Documents:

A.1 Buoy Positioning Procedure
A.2 Examples of Buoy Data Cards
A.3 Example of Buoy Service Report (BSR)
A.4 Guidelines for Safe Handling of Buoys

Appendix B Buoy Information Drawing / Data

Appendix C List of Buoys by Contract Area and Sub-area

C1 Western Region, W-1 to W-11
C2 Central & Artic Region, C-1 to C-45
C-3 Atlantic Region, A-1 to A76

Appendix C Includes for each contract area and sub-area:

- cover sheet, which includes general information for the contract area and sub-area; number, maximum size of buoys, commissioning and decommissioning dates, primary positioning method, etc;
- listing of all buoys in the contract area and sub-area with associated data;
- listing of buoys to be converted from steel to plastic within the contract area and sub-area; and
- outage history for the last five (5) years.

Appendix D Supplementary Buoy Information

1.0 OBJECTIVE

Canadian Coast Guard (CCG) requires across Canada, tending of buoys, including servicing, decommissioning, commissioning, storage and transportation.

2.0 BACKGROUND

CCG currently maintains a network of approximately 11,286 buoys for the purpose of ensuring the safe and expeditious movement of maritime traffic, to protect the marine environment in freshwater and seawater, maintain maritime safety and to facilitate maritime commerce and ocean development.

Canada is expanding its approach whereby the operation and on-water maintenance of floating aids to navigation, herein known collectively as buoy tending services, is carried out by Contractors which meet applicable commercial vessel regulations.

3.0 SCOPE OF WORK

a. The Contractor will provide the buoy tending services of commissioning, servicing and decommissioning in both contract areas and sub-areas. The Contractor will also provide operational plans, reports and asset information. In addition, the Contractor will communicate with appropriate Canadian Coast Guard (CCG) authorities to report outages and/or to report when services have been restored.

b. CCG will supply all materials (buoys, mooring, anchors etc.) to be installed by the contractor, as well as spares and replacements for worn components.

c. At contract award date, all buoys will be in situ on the water.

4.0 BUOY TENDING ACTIVITIES

4.1 Commissioning

a. Commissioning is the term for the activity or activities carried out at the start of the operational season, typically in spring. The required activity varies by region, depending on local conditions and the type of service. In areas which are free of ice conditions, or where the operational season is year-round, commissioning activities may not be required.

a. Refer to Section 9.1, Primary Positioning Method, for descriptions of commissioning activities. Refer to Appendix C for activities that are included in each contract area and sub-area for specific buoy requirements.

4.2 Decommissioning

a. Decommissioning is the term for the activity or activities carried out at the end of the operational season, typically in fall or winter. The required activity varies by region, depending on local conditions and the type of service. In areas which are free of ice conditions, or where the operational season is year-round, decommissioning activities may not be required.

b. Refer to Section 9.2 for descriptions of decommissioning activities. Refer to Appendix C for activities that are included for each contract area and sub-area for specific buoy requirements.

4.3 Servicing, Unscheduled

Unscheduled servicing activities on floating aids include, but are not limited to, the following examples of unscheduled work:

a. replacing a buoy which has been lost;
b. checking and/or re-positioning a buoy which is reported to be off station;
c. checking and/or replacing the light (for lit buoys); and
d. retrieving a lost buoy within the contract area(s) and sub-area(s).

Refer to Section 9.3 for descriptions of unscheduled servicing.

4.4 Servicing, Scheduled

Scheduled servicing activities on floating aids include the following planned work:

a. completing planned cyclical replacements of buoy moorings. This work is related only to buoys whose moorings stay in the water year round and is not carried out on seasonal buoys.

Refer to Section 9.4 for descriptions of scheduled servicing.

4.5 Additional Work

CCG may have a requirement for additional maintenance work on buoys or other materials.

CCG will define the requirement. The Contractor will be requested to provide a quote. Upon acceptance of the quote by Canada, CCG will authorize the work. The Contractor will perform the work accordingly.

5.0 REPORTING REQUIREMENTS

5.1 Annual Work Plan

The Contractor is required to provide an annual work plan indicating the scheduled dates for commissioning, servicing and decommissioning. The Contractor will submit this plan, at the latest, one (1) month before the first planned date for on-water work or March 1st of each year.

5.2 Daily Operational Reporting

During commissioning and decommissioning, the Contractor shall keep the CCG's representatives informed daily during normal working hours on the status of work, by phone or e-mail.

5.3 Biannual Inventory Reporting

a. The contractor is responsible for the inventory management of all spare parts, consumables and assets, including recording and reporting requirements.

b. CCG will provide an electronic format for inventory reporting.

c. The Contractor shall maintain a listing of all spare materials (chains, shackles, lights, etc.) and update the list as materials are consumed. The listing shall also track where and when spare materials are used and which materials have been disposed of.

d. After commissioning and decommissioning, the Contractor shall forward to CCG the biannual inventory report along with its invoice.

5.4 Buoy Service Reporting (BSR)

Whenever any on-water work is completed on a buoy (commissioned, decommissioned, replaced, moved, inspected etc.) the Contractor shall complete a BSR for each buoy at each visit. The form shall be duly signed by the Contractor and forwarded to the CCG representative. The data can be provided in hardcopy or by utilising a mobile version of the CCG data system (SIPA).

See Appendix A.3, for an example of a BSR.

6.0 OPERATIONAL REQUIREMENTS

The Contractor crew, vessels and cranes shall be operated, maintained and built inline with the Canada Shipping Act, 2001.

During the contract period, the Contractor shall incorporate any updates made to the Canada Shipping Act, 2001, that may impact its crew, vessels and cranes.

7.0 BUOY POSITIONING METHODS

7.1 Primary Positioning Method

a. The Contractor will check and / or position buoys using differential global positioning system (DGPS) where available. If DGPS is not available, other positioning methods shall be approved by CCG.

b. The Contractor's crew shall be trained in the use of DGPS. The DGPS shall provide a positioning accuracy of the order of five (5) meters.

c. The Contractor shall use professional marine navigation equipment in its vessels.

7.2 Alternative Positioning Methods

a. If DGPS is not available or appropriate, the Contractor shall use Global Positional System (GPS) in combination with one or more secondary methods. The secondary methods to be used are indicated in the Buoy Data Card (BDC).

   Refer to Appendix A.2, for examples of Buoy Data Cards indicating various positioning methods.

b. Secondary methods include soundings, radar bearings, compass bearings, local knowledge or other methods.

c. "Local knowledge" is a term used to describe information about a waterway that local mariners and/or CCG personnel have developed with experience and which is usually not contained in official nautical documents. Placement of the buoy may be by means of "sighting" the obstruction to be marked either visually or by sounding with echo sounder or hand lead. In such a case, the fixing data is a description of the procedure to be followed. Position checking is by repetition of this procedure. Local knowledge procedures are included as "fixing data" in the BDC. BDCs for all buoys in a contract area will be provided to the Contractor by CCG.

d. Any method of positioning other than those prescribed above must be approved by CCG prior to its use.

   Refer to Appendix A.1 Buoy Positioning Procedures for detailed information on positioning procedures.

   Refer to Appendix C for required positioning methods for each Contract and sub-contract area.

8.0 PLANNING & SCHEDULING

8.1 Commissioning

a. In some areas, buoys form systems that are linked to other areas, and therefore shall be commissioned in an orderly and systematic fashion. In addition, for Commercial aids in areas subject to ice, the commissioning date is dependent on ice-free conditions and will vary each year. The contractor will liaise with the appropriate CCG office to determine the priorities and order of commissioning prior to commencing operations each spring.

b. Typically for recreational aids to navigation, the Contractor shall check, maintain and repair as required before May 15th of each year.

   See Appendix C, Cover Sheet for specific annual commissioning and decommissioning dates for each contract area and sub-area.

8.2 Outage Response

8.2.1 Performance Levels

It is the Contractor's responsibility to ensure that the maintenance and fault/failure restoration of all buoys is implemented to achieve the availability times listed below. As per the International Association of Marine Aids to Navigation and Lighthouse Authorities (IALA) standards, availability is calculated over a 36-month service period using the following formula:

A (Availability) = (Total time – Down Time)) / Total time

'Down time' is measured from the issuance to cancellation of the Notice to Shipping (NOTSHIP) related to the service outage.

The required performance levels to be achieved by the Contractor are related to 'aid importance' categories as follows:

Importance of Category 1
Availability: 99.8%
Time to Repair: Two (2) Days

Importance of Category 2
Availability: 99.0%
Time to Repair: Four (4) Days

Importance of Category 3
Availability: 97.0%
Time to Repair: Six (6) Days

'Time to repair' – is the time from notification of outage to restoration of full service.

The calculation of 'time to repair' used for Contractor's response will not include items outside his control e.g. severe weather conditions which prevent safe access to the work, delays caused by CCG supplying replacement material or other issues which are outside the Contractor's control.

8.2.2 Outage Monitoring

a. CCG issues NOTSHIPs in order to advise the marine public of hazards to navigation, defective aids to navigation and other important navigational information. These are published on CCG's webpage.

b. The Contractor shall monitor the NOTSHIP page for his area of operation on a continuous basis and respond to outages which are advertised by NOTSHIP without additional direction from CCG.

c. Notwithstanding the above, the Contractor may receive notification of a discrepancy from one or more of the following prior to issuance of a NOTSHIP: the CCG Operations Centre, a CCG Base, a CCG Radio Station or other CCG representative.

8.2.3 Outage Response Availability

a. The contractor must maintain a standby posture at all times during the life of the contract such that he is able to respond to discrepancies within the prescribed response time, as identified in Section 8.2.1.

b. If the Contractor is unable to respond within the prescribed timeframe (due to adverse weather conditions or other circumstances) he shall advise the CCG representative, during normal working hours, and provide information on when he will be able to proceed with the servicing.

c. The contractor is expected to have a means of contact on a 24hr/day, 7day/week basis.

d. The contractor is expected to have a means of contact for his vessel(s) when it is involved in any activity that could be deemed part of this requirement.

9.0 WORK SPECIFICATIONS

9.1 Commissioning

9.1.1 Year round buoys

A 'year-round' buoy is operational and considered to be 'in-service' year round, therefore it is not commissioned. In some areas, the Contractor shall check year-round buoys for correct position and for condition of numbers and tape which may require replacement. Buoys found to be off position shall be immediately placed on position by the Contractor. The Contractor shall clean buoy and replace damaged lettering and/or retro-reflective material as required.

See Appendix C, Overview page for specific information on work required for each contract area and sub-area.

9.1.2 Seasonal buoys

a. For a buoy which was replaced with a winter spar, the Contractor shall verify buoy position. Buoys found to be off position shall be immediately placed on position by the Contractor. The Contractor shall remove winter spars and replace them with summer buoy. The Contractor shall clean buoy and replace damaged lettering and/or retro-reflective material as required.

b. For a buoy which was completely lifted, including mooring assembly of chain and anchor, the Contractor shall place buoy in position and verify position is correct. The Contractor shall clean buoy and replace damaged lettering and/or retro-reflective material as required.

9.1.3 Seasonal buoys in place year round

a. For buoys left in the water in the non-operational season and where applicable, the Contractor shall verify buoy position. Buoys found to be off position shall be immediately placed on position by the Contractor.

b. The Contractor shall inspect retro-reflective tape and numbers and verify that buoy colour is not obscured by dirt, debris or guano. The Contractor shall

clean buoy and replace damaged lettering and/or retro-reflective material as required.

9.1.4 Lighted buoys

a. All buoy lanterns are self-contained units that include a solar panel, battery and light.

b. As applicable, lanterns will be placed on the appropriate buoys during the commissioning process. Lanterns will be tagged and identified by buoy number when given to the Contractor.

c. The Contractor shall ensure that solar panels and lantern lenses are free from dirt or other debris.

d. The Contractor shall ensure that after being placed on the buoy, the lantern is operating and displaying the proper flash characteristic.

9.2 Decommissioning

9.2.1 Year round buoys

A ‘year-round’ buoy is operational and considered to be ‘in-service’ year round, therefore it is not decommissioned.

9.2.2 Seasonal buoys

As applicable, the Contractor shall replace the summer buoys with winter spars or remove them completely, including mooring assembly of chain and anchor. Materials are to be transported to the depot by the Contractor.

9.2.3 Seasonal buoys in place year round

a. If a buoy is equipped with a lantern, the contractor shall check that it is operating properly and then remove it from the buoy. The Contractor shall clean the lantern with soapy water and check visually for any damages. The Contractor shall tag the lantern with the buoy number and return it to the appropriate storage location for off-season period.

   Refer to Appendix C for location of off-season lantern storage.

b. For unlit buoys, no action is required at season end.

9.3 Servicing, Unscheduled: Outages and Discrepancies

9.3.1 Buoy off position

The Contractor shall restore buoy to correct position.

9.3.2 Buoy off position and lost

If a buoy is reported off position and lost, the Contractor shall replace buoy with its complete assembly in its correct position. The Contractor shall search for the buoy within, at maximum, the contract area or sub-area.

9.3.3 Buoy low or partially submerged or leaning

If a buoy is reported or found to be low in the water or leaning, the Contractor shall visually inspect the buoy for a possible leak and for the presence of marine growth. If it appears that water is entering the hull of the buoy, the Contractor shall replace the buoy and return it to CCG. If marine growth is causing the fault, the Contractor shall clean the buoys and equipment as soon as possible.

9.3.4 Buoy in place but difficult to see

If an aid's light or daytime colour characteristic is obscured by bird guano or other debris, the Contractor shall clean buoy and replace damaged lettering and/or retro-reflective material as required.

9.3.5 Buoy lantern extinguished

The Contractor shall replace extinguished lantern with spare lantern. The Contractor shall check operation and confirm that characteristic is correct. The Contractor shall tag extinguished lantern and ship it back to the CCG Base.

9.4 Servicing, Scheduled: Mooring Replacement

a. The Requirement includes mooring replacements for 'Year-Round' buoys only.

b. The Contractor will perform them on a cyclical basis – the cycle varies depending on ice, water and current conditions and is typically 3, 4 or 5 years.

c. See Appendix C, for replacement cycle required for each buoy.

d. Mooring replacement requires a complete lifting of the buoy assembly by the Contractor, including the mooring and anchor, out of the water. The Contractor shall replace the components and the complete buoy in the water on position. The Contractor shall return the worn items to depot.

e. If buoys are replaced due to damage, the Contractor shall normally conduct a mooring inspection and record the results at the same time.

10.0 MATERIAL STORAGE, HANDLING AND TRANSPORTATION

10.1 Responsibility of Material Storage

a. If applicable, the Contractor shall supply its own storage facility.

b. If applicable, CCG will supply the storage facility.

c. Unless otherwise indicated, CCG will allow the Contractor to use the CCG depot for material storage.

d. In some contract areas and sub-areas, CCG will not be able to provide storage at the CCG depot. In these cases, the Contractor shall provide its own storage facility. Refer to Appendix C for each contract area and sub-area.

10.2 Material Transportation

a. Where CCG provides storage at the CCG depot, CCG will be responsible for material handling at the depot. CCG will load/unload the Contractor's vessel or truck at the depot. The Contractor will be responsible for securing loads, either on their vessel or truck. The Contractor will be responsible for transportation of the materials to and from the CCG depot to the points of service (buoy locations). Loading/unloading will occur only during regular office hours and adequate notice must be provided to CCG. The Contractor must provide loading plans for their vessel in advance.

b. Where the Contractor provides his own storage area, the Contractor will be responsible for transportation of the materials to and from his storage area to the points of service (buoy locations). For any transportation carried out by the Contractor or sub-contractor, ground transportation shall be executed in compliance with any applicable provincial and municipal acts (weight, width, height, and other requirements). The Contractor shall be responsible for the handling of the material in its storage facility.

c. However in cases of breakage, CCG will be responsible for the transportation of replenishment material such as spare parts, hardware or replacement buoys from the CCG Depot to the Contractor's facilities.

10.3 Material Storage by Contractor

Where the Contractor provides the storage facility for materials, the Contractor shall satisfy the following requirements:

a. Buoys, chains, sinkers, counterweights, and shackles shall be stored in a secure location*. Outside storage is acceptable for these items. Any outside storage shall be flat and well drained. The storage facility shall be easily accessible by CCG personnel for inspection.

b. Buoys must be stored in such a way that they cannot be damaged. Where buoy may be damaged by ground surface, the Contractor shall provide protection such as plywood or timber.

c. Where applicable, lanterns shall be stored in a secure location*. To protect the battery life, the batteries shall either be kept charged or be prevented from discharging.

Note: Lantern storage by Contractor is required only in the Maritime provinces of Nova Scotia, New Brunswick and Prince Edward Island; elsewhere, lanterns are to be returned to the CCG depot by the Contractor.

To keep the battery charged, the storage location shall allow the solar charging system to be exposed to direct sunlight, for example outdoors or near a south facing window, or under a bright artificial light source**.

To prevent the batteries from discharging, the lantern must be fully charged prior to storage. It must be places in complete darkness, for example inside a box or an opaque black plastic bag. It will turn off automatically after 24 hours. The storage location must be temperate as both severe cold and very warm temperatures can cause battery issues. The batteries will slowly discharge while in storage and must be fully recharged prior to putting the lantern back into service. The recharge process will begin automatically once the lantern is exposed to light. Recharge the batteries in one of the following two ways:

- The lantern can either be placed in direct sunlight for a period of 14 days; or
- The lantern can be placed under a bright artificial light source** for a period of 7 days.

* A secure location is intended to prevent vandalism and theft. An example outside storage facility is a fenced area equipped with locked gates, with a minimum fence height of 1.8 metres.

** A bright artificial light source means an incandescent or halogen bulb with a recommended capacity of 500 watt. If a lower capacity bulb is proposed, the exposure period must be increased per CCG guidance.

11.0 FAMILIARIZATION

a. CCG will provide familiarization sessions for new contractors covering two (2) topics: use of SIPA (CCG data system) and basic care of CCG assets. Total time required for the sessions is one (1) day.

b. CCG will provide the familiarization sessions at the CCG base (depot) for each contract area and sub-area.

c. For SIPA usage, Contractors who intend to use SIPA mobile shall provide their personal computer for the familiarization session. CCG will load the SIPA program onto the Contractor's computer.

d. The Contractor shall inform CCG on the number of attendees they intend to book.

12.0 HEALTH AND SAFETY

a. The Contractor shall comply with the provisions of the Act Respecting Occupational Health and Safety and the Occupational Health and Safety Regulations at all times.

b. After contract award and before any work commences, the Contractor shall provide a Health and Safety Program specific to all the activities that the Contractor may carry out under this requirement. The program shall remain in force throughout the term of the contract and shall meet the following requirements:

- identify the risks specific to each category of task to be performed as per the requirement and the corresponding preventive measures, based on regulatory requirements;
- identify the person responsible for applying the preventive measures;
- identify procedures for use of equipment on the vessel; and
- include a procedure to be followed in the event of an accident.

13.0 INSPECTION OF WORK

a. The Contractor will provide marine transportation for CCG personnel to visit some of the buoy locations for the purpose of inspecting the work, to confirm the condition and correct positioning of the buoy.

b. The site visit will occur after commissioning at a mutually agreeable time but no later than thirty (30) days after commissioning activities are complete, or

thirty (30) days after contract start date in an area where there are no commissioning activities.

c. Normally, a maximum quantity of 33% of the buoys sites will be visited each year of the contract, unless the inspections are deemed unacceptable. In that case CCG may increase the number of buoys to be inspected at no extra cost to CCG.

d. CCG reserves the right to inspect the Contractor's storage area at any time during the contract period. Reasonable notice of planned inspections will be provided to the Contractor.

APPENDIX A.1

BUOY POSITIONING PROCEDURES

Buoy positioning

The positioning of aids to navigation shall always be made using the most accurate method and, if required, be confirmed by another method. Judgment must be exercised when selecting the most appropriate methods.

Buoys

(i) *Authorized document*

Buoys shall be checked for correct position and characteristics against the information shown on the most recent SIPA generated Buoy Data Card. Charted positions shall not be used unless it has been confirmed that they match the positions indicated on the Buoy Data Cards.

(ii) *Checking the position*

To check the position of a buoy from a ship, the buoy shall be adjacent to the observer or at a sufficient distance that will guarantee its safety and that of the ship. The distance and the direction of the observer must be determined as accurately as possible. The Contractor shall be required to provide a sketch of the various offset values between the ship's DGPS antenna, buoy release points and observation points (see example of sketch). The sketch made will serve as reference for the configuration parameters that will be entered in the DGPS receiver by the Contractor.

The most recent large scale chart, indicating the landmarks used to establish the position, shall be utilized. Water depth, date and time shall be entered in the Buoy Service Report for each intervention on the aid to navigation.

(iii) *Primary positioning methods*

The following method shall be used:

1. Differential global positioning system (DGPS), providing compliance to the following conditions:

Ships using the DGPS shall carry the appropriate equipment and the crew be trained in accordance. In addition to the requirements mentioned in Appendix A.1.1, the DGPS equipment shall provide a positioning accuracy of the order of 3 metres (95 % of the time) for HDOP values exceeding zero but not exceeding 2 ($0 < HDOP \leq 2$). The Contractor shall carry professional marine navigation type equipment.

The DGPS equipment shall be approved by the CCG. The Contractor shall therefore, submit the model of equipment that he intends to use in order to obtain the required approval.

See appendix A.1.1 for the general rules on the use of DGPS as an approved method.

(iv) *Secondary positioning methods*

The methods described below give less accurate results and shall be used only when the primary positioning method described in (iii) above is not accessible. They are accepted as means of reporting obvious position errors:

1. Global positioning system (GPS).

2. Two or more sextant horizontal angles between suitable land objects. When selecting objects, the general rules governing this method of fixing shall be observed. It is preferable to use two sextants and to read the angles simultaneously. When possible, the angles shall be continued on the entire horizon to ensure 360° accuracy.

3. Two stationary objects (range) aligned in a horizontal angle adjacent to that line using a third land object. These objects can be natural or artificial. The distance between the two objects forming the range must be appreciable and the crossing angle must be between 30° and 150° as close as possible to 90°.

4. Two fixed ranges, natural or artificial. The crossing angle must be between 30° and 150°, as close as possible to 90°.

5. True bearings of at least three land objects, plotted, well visible and suitably placed, whose subtended angles are between 30° and 150°, as close to 90° as possible, and drawn with a station pointer in the form of dashes on the plotted lines of bearings.

6. Radar distance between three or more suitable land objects indicated on a map, and identifiable.

7. Sounding of a visible range (applicable to clearly delimited natural or dredged channels).

8. Radar bearings and distance.

9. Visible range and radar distance

(v) **Local Knowledge**

Local knowledge is information about a waterway that is known to local residents and/or CCG personnel, and may not be contained in any official nautical documents. Local knowledge may be the only available or practical method of buoy positioning in some cases, (e.g., when sufficiently accurate charts are not available). Placement of the buoy may be by means of "sighting" the obstruction to be marked either visually or by sounding with echo sounder or hand lead. In such a case, the fixing data is a description of the procedure followed. Position checking is by repetition of this procedure.

(vi) *Approval of alternate methods*

Any method to check buoy position, other than those described earlier, shall be approved by the CCG representative.

(vii) *Accuracy of position check*

The "on-position radius" of a buoy is a value allowing detection of an aid's unacceptable movements. The value for this radius is calculated considering the length of the mooring, water depth and an allowance for error in the positioning method; for tidal locations, the depth used is low tide. The "on-position radius" for each buoy is provided in the Buoy Data Card. A checked position outside the on-position radius will mean that the buoy is off advertised position and that measures have to be taken to reposition the buoy to advertised position as indicated on the Buoy Data Card.

Buoy Service Report

Every time a buoy is visited for scheduled and unscheduled maintenance a Buoy Service Report has to be generated by the person responsible for the servicing. The Buoy Service Report must be filled out completely and accurately. Positioning data, maintenance work and any other applicable information shall be recorded.

Administration and use of the BSR shall be in accordance with the following:

Two systems are in place: the conventional hand written form and the electronic 'SIPA mobile' system. Both systems may be used – Canadian Coast Guard's preference is to use the electronic format but will permit a Contractor to use the hand written reports if preferred or if not conversant in use of a personal computer.

The Primary and Secondary methods of checking the position shall be entered with a complete description of the applicable fixing data. Entries such as « Damages not repaired » must be detailed in the « Remarks » section. The depth at the buoy position and the time of deployment shall also be recorded.

Once completed, the form shall be signed (by hand or electronically) to validate the maintenance done and the data used to determine the position of the buoy.

1. Buoy Service Report (BSR) – instructions and routing

1.1 A copy of the completed form shall be kept by the contractor and the original sent to the CCG office where it will be compared with the Buoy Data Card of the buoy concerned to ensure that the positioning data is correct and the buoy characteristics have been maintained. When the water depth provides significant indications on the position accuracy of the buoy (ex., in dredged channels or zones, shoals, rapids), the reading recorded in the BSR shall be checked against the Buoy Data Card.

1.2 Glossary and instructions

1.2.1 *Type of visit*

(a) *Scheduled*: Maintenance work performed according to contract for the purpose of ensuring the buoy characteristics and position.

(b) *Unscheduled*: Maintenance work performed following a report or observation indicating the malfunction or displacement of a buoy. Will normally follow a:

- Notice to shipping;
- Call received from a ship;
- Problem corrected while passing by.

(c) *Call*: Maintenance work performed after a call received from a vessel indicates the malfunction of a buoy; will normally be entered on the form as unscheduled maintenance work. Details on the origin of the call or other relevant information may be entered in the « Remarks » section.

(d) *Seasonal replacement*: Lighted buoy replaced with a winter buoy or vice-versa, buoy removed for the winter or installed at opening of the navigation season.

(e) The blank space in the « Type » section may be used to enter the Notice to Shipping number or any other reason not mentioned such as a R&D project for example.

1.2.2 *Type of service*

(a) **Placed:** Buoy, mooring and anchor moved from ship to established position (as per Buoy Data Card).

(b) **Lifted:** Buoy, mooring and anchor removed from water.

(c) **Replaced:** Buoy on-station lifted, new buoy placed.

(d) **Position Verified:** Position of buoy checked and found to be within the "on- position" area shown on the Buoy Data Card.

(e) **Repositioned:** Buoy found off-position, lifted and placed on established position shown on the Buoy Data Card.

Note: When a buoy is repositioned, the location and fixing data of the "as found position" will be recorded and saved (on a separate Buoy Service Report if necessary) as well as the fixing data and position to which it was relocated.

APPENDIX A.1.1 – TERMS ON THE USE OF THE DGPS

The purpose of the following directives is to help Contractors understand the technical requirements of the DGPS equipment that will be used, and to guide him as to how the equipment should be set for optimum use and finally to help him identify the performance factors to be observed during positioning.

Required practices

The conversion function of the DGPS receiver's reference positions shall be set to WGS-84.

1) The Contractor shall ensure that the DGPS received is upgraded (latest software package) and operates correctly before positioning an aid to navigation. Periodic accuracy checks shall be made on the equipment and recorded in an inspection log belonging to, and kept by the Contractor.

2) The DGPS shall not be used to position an aid to navigation when the DGPS station used is transmitting the integrity code indicating that it is in an unmonitored or unhealthy status.

3) DGPS data can be recorded manually or electronically in a BSR.

4) The DGPS shall not be used if the age of pseudorange corrections exceeds 30 seconds.

5) The DGPS receiver's datum conversion feature shall be set at WGS-84.

6) The readings of the GPS satellites geometry quality, called horizontal dilution of precision (HDOP), shall be above 0 and lower or equal to 2.0. A reading of 0 indicates that the system is not operating correctly.

7) When aids are being positioned, the DGPS mode shall not be set to automatic, unless the electronic positioning system or the DGPS receiver displays an audible and visual alarm to notify the user that the positioning system has switched from the DGPS to the GPS mode or that the station used is unmonitored or transmits an unhealthy signal.

8) The selection of the differential station shall be done as follows:

   1. The station closest to the aids to navigation that need to be placed or positioned;
   2. If the signal from the closest station is unhealthy or is unmonitored, select the nearest adjacent station;
   3. Do not use a station out of your displayed coverage zone (as per the official coverage chart issued).

When positioning an aid to navigation, the DGPS receiver shall be in a three-dimensional (3D) mode.

Default setting required on DGPS receivers

1) Pseudorange correction limit shall be set to 30 seconds.

2) The receiver's datum conversion feature shall be set at WGS-84.

3) HDOP shall be set to a maximum of 2.0.

4) The receiver's DGPS mode shall not be set to automatic, unless the electronic positioning system or the DGPS receiver displays an audible and a visual alarm informing the user that the positioning system has gone from DGPS to GPS mode, that the station used is unmonitored or transmits an unhealthy signal.

5) The 3D mode shall be selected.

6) The mask angle shall be set to 7.5° or more. For receivers whose angle is set by increments of 5°, the value 10° shall be selected.

7) The data transfer flow shall be set to 200 bits per second when a Canadian station is used.

Required Alarms to be activated on DGPS receivers

1) The alarm that displays the integrity status (station unhealthy or unmonitored) shall be activated.

2) If available, the RTCM message alarm shall be activated.

3) If available, the pseudorange age correction shall be activated.

4) If available, the HDOP alarm shall be activated.

Note: The alarm devices shall be audible and visual.

DGPS receiver technical requirements

1) The receiver shall alert the user of any change in the transmission integrity of the station. This is done by transmitting specific codes contained in the "Station's health field" of the RTCM message heading of the station used. If the DGPS transmission is unhealthy or unmonitored, the receiver shall alert the operator and return in GPS mode in addition to emitting both a visual and audible alarm.

2) The DGPS receiver shall be capable or accepting type 9-3 RTCM SC-104 corrections.

3) The DGPS receiver shall be capable of tracking, continuously and simultaneously, L1, L2 or L5 frequencies from 12 satellites and updating the position at a rate of 1 per second (for NMEA messages).

4) The DGPS receiver shall have a multipath mitigation system and employ a built in reliability algorithm.

5) If the DGPS data is recorded electronically, the DGPS receiver shall be capable of capturing the following NMEA sentences: GGA, GRS, GST, GSA and MSS. The receiver shall support version 2.1 of NMEA 0183.

6) Position coordinates shall display seconds to two decimal places (XX°XX'XX.XX'') or minutes, to four decimal places (XX°XX.XXXX'), or better.

Information required on Buoy servicing report

1) When DGPS data is recorded manually, the following information shall be entered:

- Position of the aid: latitude, longitude *;
- HDOP;
- Time of maintenance, date of maintenance;
- DGPS station used (name and/or frequency).

* The position shall be entered in degrees, minutes and seconds (minimum of 2 decimal places required), or degrees, minutes and decimals of minutes (minimum of 4 decimal places required).

2) When DGPS data is recorded electronically, the following information shall be carried into the BSR:

- Aid position recorded (4 decimal places for minutes and 2 decimal places for seconds).
- HDOP - (if available).
- Time of maintenance, date of maintenance.
- Identification of the DGPS receiver - (if available).
- Position of the DGPS antenna - (if available).
- Information on DGPS positioning which includes the 5 NMEA phrases: GGA, GSA, MSS, VTG and BWC - (if available).
- Identification of the observer's variation - (if available).
- Ship's heading - (if available).
- Distance and bearing between the position displayed and the position recorded - (if available).

Sample Sketch of Offset Values

EXAMPLES OF OFFSETS TO BE APPLIED TO COMPENSATE FOR THE POSITION OF THE WORK DECK RELATIVE TO THE DGPS ANTENNA

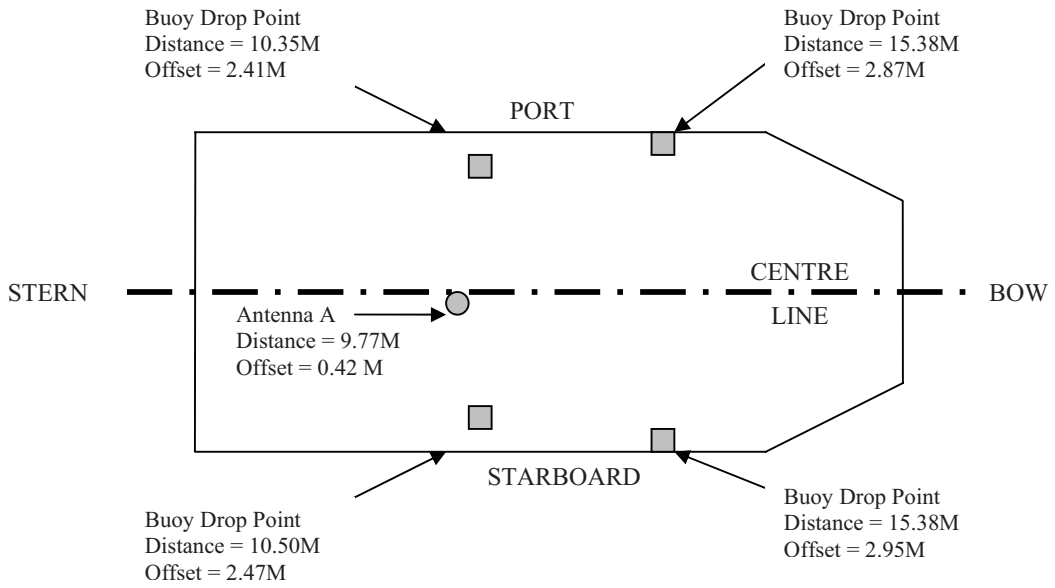

NOTE

The distances are measured from the vessel's stern.

The offsets are determined relative to the vessel's centreline

APPENDIX A.2 Example, Buoy Data Card

BUOY DATA CARD List of Lights Number: 240.0000 Aid Id: 72 Priority:

Name of Buoy	: Lighted Spar 72	Serial #	: PR-1.4 359
Location	: Lake St. Lawrence-Northeast of Crysler Shoal	File No	: 58
Latitude (N)	: 44° 55' 46.9120"	Year Established	: 1959
Longitude (W)	: 75° 5' 26.1770"	LOS Area	: CA-PR Lake St. Lawrence
Determined by Method	: accuracy is Exact	Light Exhibited	: Night / Nuit
		Importance	: 2
Period Of Service	: Seasonal (in place year round) / Saisonnier (en place à l'année) — Begins (mm/dd) : — Ends (mm/dd) :	Chart No	: 1434
		Chart Datum	: NAD 1983
Maintained By	: Prescott — Owned By : CCG / GCC	Vehicle	: Ship / Navire

Buoy Specification		Canadian Buoyage System	
Drawing No	: SW500-6	Function	: 'Starboard / Tribord
Type	: 0.5 x 6.1 Meter Lighted Ice Spar 16a-Buoys Lighted - 175 to 500 kg / 16a-Bouée lumineuse - 175 à 500 kg	Buoy Colour	: Red / Rouge
Bell-Whistle	: None/Aucun	Characteristics	: Fl 0.3s Ec 0.7s / Lum. 0.3s, obs. 0.7s
Topmark	: No/Non	Rhythm	: Q
Lantern Type	: Sabik MPV/LED	Period	: 1s
Lantern Size	:		
Lens Colour	: White / Blanc		
Bulb Size (Colour)	: LED (Red / Rouge)		
Bulb Changer	: None / Aucun	**Solar**	
Flasher	: Sabik	Panel Wattage	:
Power Type	: Battery / Batterie	No. of Panels	: 0
Battery Type	: Self Contained / Lanterne autonome à DEL No / Qté: 1	Regulator Type	:
Radar Reflector		**Racon**	
Type	:	Characteristic	: Type :
Size	:	Radar Band	:

Depth (Chart Datum)	: 13.0 m	Bottom Type	: Mud / Boue	**On Position Radius**	(1) 31m
Tide Range	:				(2) 31m

POSITION DATA

Primary Positioning Method: DGPS

1: POS Lat : 44° 55.7819'

2: POS Long: 075° 05.4363'

3:Conf: No/Non

Alternative Positioning Method 1: Horizontal Sextant Angles / Angles horizontaux au sextant

1:L 70 1-2:044°-32' (POS: 00° 00' 00.0000" 000° 00' 00.0000")

2:Bradford Is L 71 2-3:098°-21' (POS: 00° 00' 00.0000" 000° 00' 00.0000")

3:L 73 3-4:000°-00' (POS: 00° 00' 00.0000" 000° 00' 00.0000")

4: (POS:°'" °'")

Alternative Positioning Method 2:

Mooring

Bridle / Patte d'oie (2008.05.22): 1 1/8
Shackle / Manilles (2008.05.22): 1 1/8
Swivel / Emérillons (2008.05.22): (#0)
Mooring / Orin (2008.05.22): Chain / Chaîne - 1 1/8 inches / 1 1/8 pouce / 18 m
Anchor / Ancre (2008.05.22): Serrated / Fonte 2948 kg

Comments

Date of last modification : 2013.01.2

Modified By : Signature _____

BUOY DATA CARD

List of Lights Number: 1046.0600 | Aid Id: JD12 | Priority:

Name of Buoy	: St. Peters Harbour light buoy JD12	Serial #	:
Location	:	File No	: 8005-89
Latitude (N)	: 46° 26' 24.6000"	Year Established	: 2009
Longitude (W)	: 62° 44' 7.8000"	LOS Area	: 11 - PEI - Gulf
Determined by Method	: Position is approximate - buoy is uncharted, Chart 4425 indicated "Channel buoyed".	Light Exhibited	: Night / Nuit
		Importance	: 3
Period Of Service	: Seasonal / Saisonnier — Begins (mm/dd) : 05/01	Chart No	: N/A
	Ends (mm/dd) : 12/15	Chart Datum	: Unknown / Inconnu
Maintained By	: Contractor / Entrepreneur — Owned By : CCG / GCC	Vehicle	: Boat / Bateau

Buoy Specification		Canadian Buoyage System	
Drawing No	:	Function	: 'Starboard / Tribord
Type	: GDI 0.9m Conical / GDI 0.9m Conique 17a-Buoys lighted < 175 kg / 17a-Bouée lumineuse < 175 kg	Buoy Colour	: Red / Rouge
Bell-Whistle	: None/Aucun	Characteristics	: Fl 0.5s Ec 3.5s / Lum. 0.5s, obs. 3.5s
Topmark	: No/Non	Rhythm	: Fl
Lantern Type	: Carmanah - Model 601 / Carmanah - Modèle 601	Period	: 4s
Lantern Size	: 130mm		
Lens Colour	: White / Blanc		
Bulb Size (Colour)	: LED (Red / Rouge)		
Bulb Changer	:	**Solar**	
Flasher	: Self Contained / Lanternes Autonomes à DEL	Panel Wattage	: Self Contained / Lanternes autonomes à DEL
Power Type	: Solar / Solaire	No. of Panels	:
Battery Type	: Self Contained / Lanterne autonome à DEL No / Qté:	Regulator Type	: Self Contained / Lanterne autonome à DEL
Radar Reflector		**Racon**	
Type	:	Characteristic	: Type :

Depth (Chart Datum)	: 3.0 m	Bottom Type	: Rock / Roche	**On Position Radius**	(1) m
Tide Range	:	Chain changed Sept 4/13 due to reported discrepancy			(2) m

POSITION DATA

Primary Positioning Method: Local Knowledge / Connaissance des lieux

1: Buoy is placed by sounding & local knowledge.

2:

Alternative Positioning Method 1: GPS

1: POS Lat : 46° 26.4100'

2: POS Long: 062° 44.1300'

3:Conf: No/Non

4:

Alternative Positioning Method 2:

1:

Mooring

2013.09.04
Anchor / Ancre (2013.09.04-remplacer): Concrete / Béton 1000 lb
Mooring / Orin (2013.09.04-remplacer): Chain / Chaîne - 5/8 inches / 5/8 pouce / 7.6 m
Shackle / Manilles (2013.10.25-checked/vérifier): 5/8
Swivel / Emérillons (2013.09.04-remplacer): 5/8

Comments: Buoy may be repositioned due to shifting channel.

Date of last modification : 2013.09.04

Modified By : CAMPBELK Signature _____

BUOY DATA CARD

List of Lights Number: 9035.0000 | Aid Id: K47 | Priority:

Name of Buoy	: K47	Serial #	:
Location	: Joseph River - Rock Cut	File No	: 8005-86
Latitude (N)	: 45° 9' 52.3800"	Year Established	: 1400
Longitude (W)	: 79° 41' 16.7400"	LOS Area	: CA-PS Lake Joseph / CA-PS Lac Joseph
Determined by Method	: Buoy is uncharted--channel buoyed. GPS taken 2012 service report.	Light Exhibited	: Unlit / Aucune
		Importance	: 2
Period Of Service	: Seasonal (in place year round) / Saisonnier (en place à longeur d'année) — Begins (mm/dd) : — Ends (mm/dd) :	Chart No	: 6022
		Chart Datum	: NAD 1983
Maintained By	: Parry Sound — Owned By : CCG / GCC	Vehicle	: Truck and Boat / Camion et bateau

Buoy Specification		Canadian Buoyage System	
Drawing No	: FC-3001A	Function	: 'Port / Bâbord
Type	: 0.3m Spar Can-Plastic (ORT) / 0.3m Espar Plate-Plastiq(ORT) 17b-Buoys Unlighted < 175 kg / 17b-Bouée non-lumineuse < 175kg	Buoy Colour	: Green / Vert
Bell-Whistle	: None/Aucun	Characteristics	:
Topmark	: No/Non	Rhythm	:
Lantern Type	:	Period	:
Lantern Size	:		
Lens Colour	:		
Bulb Size (Colour)	: ()		
Bulb Changer	:	**Solar**	
Flasher	:	Panel Wattage	:
Power Type	:	No. of Panels	: 0
Battery Type	: No / Qté: 0	Regulator Type	:
Radar Reflector		**Racon**	
Type	:	Characteristic	: Type :
Size	:	Radar Band	:

Depth (Chart Datum)	: 2.0 m	Bottom Type	: Rock / Roche	**On Position Radius**	(1) 0m
Tide Range	:				(2) 0m

POSITION DATA

Primary Positioning Method: Local Knowledge / Connaissance des lieux

1: Buoy placed as required to mark most favourable navigable channel.
Marking east entrance to Rock Cut. Placed by sounding.

3:

4:

Alternative Positioning Method 1: GPS

1: POS Lat : 45° 09.8730'

2: POS Long: 079° 41.2790'

3: Conf: No/Non

4:

Alternative Positioning Method 2:

1:

Mooring

2008.04.29
Mooring / Orin (2008.04.29-remplacer): Chain / Chaîne - 1/2 inches / 1/2 pouce / 4.6 m (Replaced 2008 1/2" x 15')
Anchor / Ancre (2008.04.29-vérifier): Concrete / Béton 500 lb
Counterweight / Contrepoids (2008.04.29-remplacer): Concrete / Béton 50 lb (Replaced 2008)

Comments

Date of last modification : 2013.10.10

Modified By : SIPA_ADMIN Signature _____

Appendice A.3 : Exemple de rapport d'entretien des bouées (REB)
Appendix A.3: Example of Buoy Service Report (B.S.R.)

SERVICE REPORT / RAPPORT D'ENTRETIEN

Program Name/Nom du programme: ()

Report #/# rapport:

Date-Time/Date-Heure: 2011.04.10 17:12

Unit-Vessel/Navire: Martha L. Black

LLNO/LDF: 240.0000 **Aid ID/Code de l'aide:** 72
Type: 0.5 x 6.1 Meter Lighted Ice Spar
Name/Nom: Lighted Spar 72
LOS Area/Secteur NDS: CA-PR Lake St. Lawrence/CA-PR Lake St. Lawrence

Duration/Durée: 0 days/jours 00:05 hh:mm

Reason/Raison: Buoy placing program/Programme de mouillage

Water Depth/Profondeur relevée: 14.400 m
Charted Depth/Cartographiée: 13 m

Found/Trouvée: On Position / En Position

Lantern Serial #/# série lanterne:

Removed Lantern #/# ancienne lanterne:

Buoy Serial #/# série bouée:

Winter Spar Serial #/# série ESPAR hiver:

Bearing/Relèvement: 50.579183 T
Distance: 12.424221 m

NOTSHIP/AVNAV:

Alert Office/Aviser bureau: No/Non
Unscheduled/Non cédulé: No/Non
Work Boat/Embarcation travail: No/Non

Chart/Carte: 1434 - NAD 1983
S57:

Remarks/Remarques:

Void/Annuler: No/Non

Officer/Officier:

Chassejl Officer In Charge/Officier en charge: GARIEPYA

Tasks / Tâches	Equipments / Equipements	C	R	F	D	Note
Position Verification/Position vérifiée	1.0-Buoy, Complete /1.0-Bouée Complète					
	1.1-Buoy, Hull/1.1-Corps de la Bouée	X				
	1.2-Buoy Number/1.2-Numéro de la Bouée		X			
	1.3-Radar Reflector/1.3-Réflecteur Radar					
	1.4-Reflective Band/1.4-Bande Rétro-Réfléchissante					
	1.5-Topmark/1.5-Voyant					
	1.6-Bell Strikes/1.6-Battants de la Cloche					
	1.7-Whistle/1.7-Sifflet					
	2.0-Anchor, Mooring, Complete/2.0-Ancre et Orin au Complet					
	2.1-Anchor/2.1-Ancre					
	2.2-Mooring Chain/2.2-Chaine D'Ancrage					
	2.3-Riding Chain/2.3-Chaine Flottante					
	2.4-Thrash Chain/2.4-Chaine de Marnage					
	2.5-Counterweights/2.5-Contrepoids					
	2.6-Bridle/2.6-Patte D'Oie					
	2.7-Swivels/2.7-Emerillon					
	2.8-Bow Shackles/2.8-Manille en U					
	2.9-"D" Shackles/2.9-Manille "D"					
	3.0-Lantern, Complete/3.0-Lanterne Complète					
	3.1-Lens/3.1-Lentille					
	3.2-Bulbs/3.2-Ampoules					
	3.3-Photo Cell/3.3-Valve Solaire					
	3.4-Flasher/3.4-Éclipseur					
	3.5-Bulb Changer/3.5-Changeur D'Ampoules					
	4.0-Solar Equipment/4.0-Equipement Solaire au Complet					
	4.2-Batteries/4.2-Piles					
	4.4-Voltage/4.4-Voltage					
	4.5-Electric Wiring/4.5-Câblage Électrique					
	5.0-Racon/5.0-Racon					
	6.0-Other (Please Specify)/6.0-Autre (Indiquez S.V.P.)			X		bird spikes

C=Checked R=Replaced F=Fixed D=Left Damaged

DGPS

Type: Primary/Primaire
Confirmed/Confirmer: No/Non
Antenna/Antenne

Latitude: 44° 55' 47.1700" (44° 55.7862') N
Longitude: 75° 5' 25.7392" (75° 5.429') W
DGPS Station Name/Station DGPS:
Latitude: 44° 55' 47.2140" (44° 55.7869') N
Longitude: 75° 5' 24.8064" (75° 5.4134') W
Distance Off Position: 12.46m
Sounder/Echo: 0.000000 m
HDOP: 1.4000
DGPS #: 309
Offset #:
Ship Heading/Direction: 242.00

NMEA 0183:

"$GPGGA,171000.00,4455.78691,N,07505.41344,W,2,08,1.4,106.1,M,-33.6,M,5.4,0309*7

"$GPGSA,M,3,09,12,14,15,18,21,22,27,,,,,2.4,1.4,2.0*3

Appendix A.4: Guidelines for Safe Handling of Floating Aids to Navigation

These recommendations are not intended as a complete list but as an illustration of the type of precautions that should be taken for the safe handling of buoys. The hazards identified are not intended to be a complete list, therefore contractors are to utilize due prudence and display good seamanship. It is the responsibility of the contractor to identify all potential hazards associated with the handling of navigational buoys and to ensure strict compliance with all relevant Federal and/or Provincial legislative requirements.

1. Contractors are to ensure that vessels used for aids to navigation buoy work are suitable and have the capability of handling aids to navigation in a safe manner. In addition, the vessel(s) must comply with all applicable relevant acts and regulations.

2. Contractors are to ensure that all equipment utilized in the handling of floating aids to navigation is in safe working condition and operated only by a qualified and experienced individual. In accordance with Canada Shipping Act (CSA) regulations, all lifting equipment safe working loads and safety factors are to be calculated, marked and adhered to. All straps and slings must be thoroughly inspected for any defects prior to use; damaged straps and slings shall not be used to lift buoys. At no time shall a load be raised over the heads of individuals.

3. Contractors are to ensure that persons performing buoy work are wearing appropriate protective/safety equipment e.g. PFD, safety boots and safety hat, as well as other equipment deemed necessary.

4. Contractors are to ensure that weather and sea conditions are suitable for buoy handling. If weather and sea state are not suitable, contractors should wait for appropriate conditions.

5. Contractors should have local knowledge of the area, have experience with marine operations, and know the state of water levels, water depth, and strength of current in the area.

6. Contractors are to assess the on-site conditions prior to handling operations to determine the safest means possible to approach the aid to navigation.

7. Contractors should ensure that moorings, anchors and other buoy equipment are outside the vessel and well clear of persons before dropping on position.

8. Prior to placing buoys on position, contractors must:

- Ensure that all moorings, shackles and anchors are visually inspected and are in good order. Any equipment not in good order is to be reported and new replacements will be issued.
- Ensure that moorings, shackles and chafing equipment are properly fastened to the anchor and buoy.
- Know the precise locations of where buoys are to be placed. If unsure, contractors shall wait until the proper positions have been determined.

9. For lifting or repositioning buoys, contractors must:

- Remain aware of their surroundings to ensure that the vessel does not drift on top of the shoal that is being marked by the floating aid.
- Safely raise the buoy out of the water using a strap or sling through the lug located on top of the buoy. The strap or sling must be of sufficient strength to safely lift the buoy, fittings and chain out of the water.
- Once the slack has been taken out of the buoy chain, lay the buoy on the deck. Use a “choker chain” to attach on to the buoy chain to lift the anchor out of the water. Note that the buoy is NOT to be used to lift the anchor; the anchor must be raised by attaching to the mooring under the buoy.
- Individuals should use caution not to step in the bight or mooring as this could possibly slip.
- Ensure that the mooring anchor is not fouled to the bottom; use caution that the mooring doesn’t get tangled in the propeller.

APPENDIX B: BUOY INFORMATION

Table of Contents

Steel Buoys

0.6m Spar Can/Conical (Short)

Dimensional Requirements	Units	Value (Can)	Value (Cone)
Maximum Hull Diameter (W)	m	0.6	0.6
Maximum Buoy Height (H)	m	4.0	4.2
Buoy Air Weight	kg	335	335
Overall Buoy Silhouette	-	See below	See below
Equipment Requirements			
Minimum Number of Handling Lugs	-	2	2
Minimum Number of Mooring lugs	-	1	1
Operational			
Minimum / Maximum Mooring depth	m	5/ 13*	5/ 13*
Typical Chain used	mm	20*	20*
Maximum Current	kt	5	5
Lifting Eye Safe Working Load (SWL)	kg	3000	3000
Minimum Lifting Lug Internal Diameter	mm	85	85
Minimum Mooring Eye Internal Diameter	mm	-	-
Typical Counterweight Mass	kg	-	-
Typical Sinker Mass	kg	1600	1600

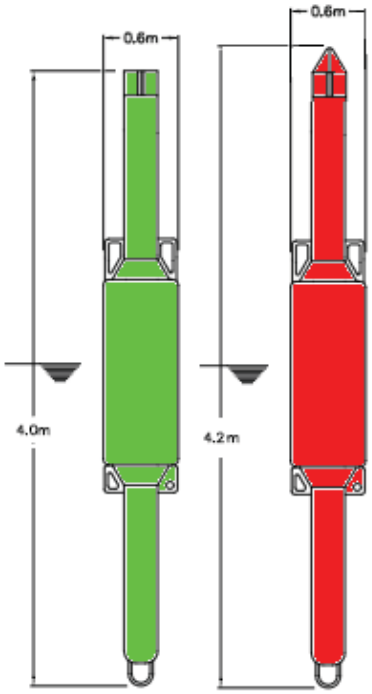

0.6m Spar-Can/Conical (Long)

Dimensional Requirements	Units	Value (Can)	Value (Cone)
Maximum Hull Diameter (W)	m	0.6	0.6
Maximum Buoy Height (H)	m	6.0	6.2
Buoy Air Weight	kg	549	549
Overall Buoy Silhouette	-	See below	See below
Equipment Requirements			
Minimum Number of Lifting Lugs	-	2	2
Minimum Number of Mooring lugs	-	1	1
Operational			
Minimum / Maximum Mooring depth	m	5/ 26*	5/ 26*
Typical Chain used	mm	20*	20*
Maximum Current	kt	5	5
Lifting Eye Safe Working Load (SWL)	kg	3000	3000
Minimum Lifting Eye Internal Diameter	mm	85	85
Minimum Mooring Eye Internal Diameter	mm	-	-
Typical Counterweight Mass	kg	-	-
Typical Sinker Mass	kg	1600	1600

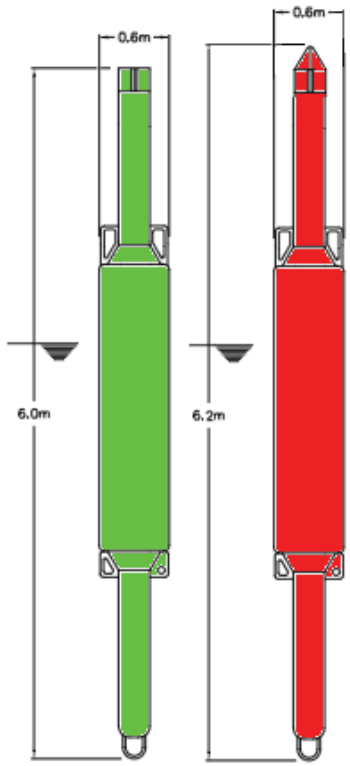

0.7m Ice Spar - Can/Conical

Dimensional Requirements	Units	Value (Can)	Value (Cone)
Maximum Hull Diameter (W)	m	0.7	0.7
Maximum Buoy Height (H)	m	9.5	9.4
Buoy Air Weight	kg	2091	1970
Overall Buoy Silhouette	-	See below	See below
Equipment Requirements			
Minimum Number of Lifting Lugs	-	1	1
Minimum Number of Mooring lugs	-	1	1
Operational			
Minimum / Maximum Mooring depth	m	9/ 32*	9/ 38*
Typical Chain used	mm	26*	26*
Maximum Current	kt	3	3
Lifting Eye Safe Working Load (SWL)	kg	5430	5430
Minimum Lifting Eye Internal Diameter	mm	150	80
Minimum Mooring Eye Internal Diameter	mm	-	-
Typical Counterweight Mass	kg	-	-
Typical Sinker Mass	kg	2700	2700

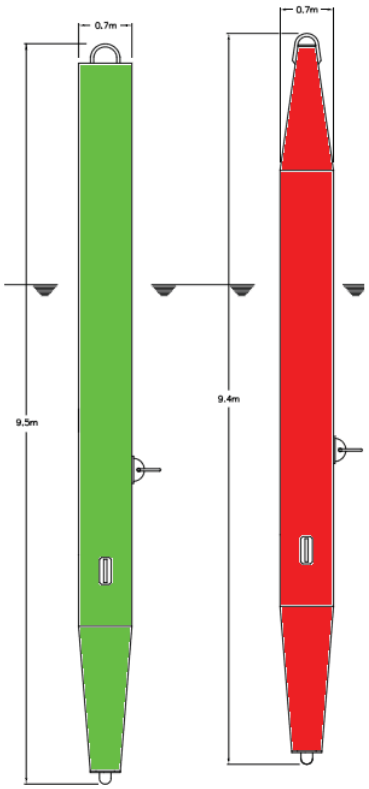

0.8m Spar Richelieu

Dimensional Requirements	Units	Value
Maximum Hull Diameter (W)	m	0.8
Maximum Buoy Height (H)	m	3.04
Buoy Air Weight	kg	370
Overall Buoy Silhouette	-	See below
Equipment Requirements		
Minimum Number of Handling Lugs	-	1
Minimum Number of Mooring lugs	-	1
Operational		
Minimum / Maximum Mooring depth	m	6/12*
Typical Chain used	mm	14*
Maximum Current	kt	-
Lifting Eye Safe Working Load (SWL)	kg	-
Minimum Lifting Eye Internal Diameter	mm	75
Minimum Mooring Eye Internal Diameter	mm	-
Typical Counterweight Mass	kg	-
Typical Sinker Mass	kg	363-680

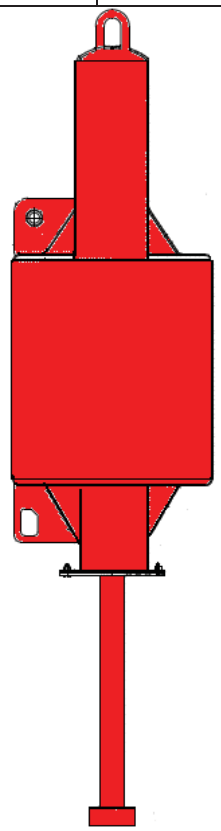

0.8 m Steel Electric Spar Buoy (Richelieu Buoy)

Dimensional Requirements	Units	Value
Maximum Hull Diameter (W)	m	0.8
Maximum Buoy Height (H)	m	3.0 – 3.5
Buoy Air Weight	kg	350 – 430
Overall Buoy Silhouette	-	See below
Equipment Requirements		
Minimum Number of Handling Lugs	-	1
Minimum Number of Mooring lugs	-	1
Operational		
Minimum / Maximum Mooring depth	m	6/12
Typical Chain used	mm	14
Maximum Current	kn	2
Lifting Eye Safe Working Load (SWL)	kg	-
Minimum Lifting Lug Internal Diameter	mm	75
Minimum Mooring Lug Internal Diameter	mm	-
Typical Counterweight Mass	kg	0 - 113
Typical Sinker Mass	kg	227 - 680

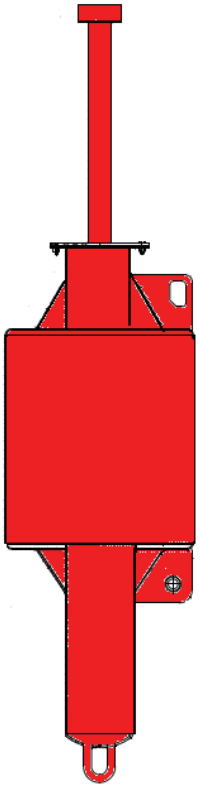

1.0m Ice Spar - Can/Conical

Dimensional Requirements	Units	Value (Can)	Value (Cone)
Maximum Hull Diameter (W)	m	1.0	1.0
Maximum Buoy Height (H)	m	10	9.9
Buoy Air Weight	kg	3957	3939
Overall Buoy Silhouette	-	See below	See below
Equipment Requirements			
Minimum Number of Lifting Lugs	-	1	1
Minimum Number of Mooring lugs	-	1	1
Operational			
Minimum / Maximum Mooring depth	m	10/78*	10/75*
Typical Chain used	mm	26*	26*
Maximum Current	kt	5	5
Lifting Eye Safe Working Load (SWL)	kg	5430	5430
Minimum Lifting Eye Internal Diameter	mm	150	80
Minimum Mooring Eye Internal Diameter	mm	-	-
Typical Counterweight Mass	kg	-	-
Typical Sinker Mass	kg	3600	3600

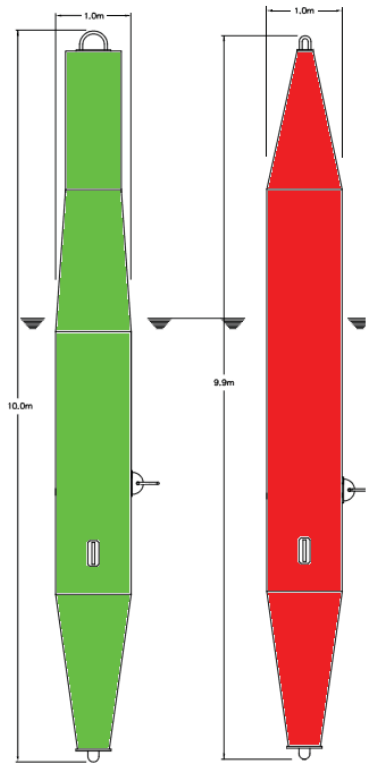

1.2m Coastal - Can/Conical

Dimensional Requirements	Units	Value (Can)	Value (Cone)
Maximum Hull Diameter (W)	m	1.2	1.2
Maximum Buoy Height (H)	m	2.3	2.2
Buoy Air Weight	kg	444	310
Overall Buoy Silhouette	-	See below	See below
Equipment Requirements			
Minimum Number of Lifting Lugs	-	1	1
Minimum Number of Mooring lugs	-	1	1
Operational			
Minimum / Maximum Mooring depth	m	4.5 / 58*	4.5 / 58*
Typical Chain used	mm	20*	20*
Maximum Current	kt	4	4
Lifting Eye Safe Working Load (SWL)	kg	1285	1285
Minimum Lifting Eye Internal Diameter	mm	150	150
Minimum Mooring Eye Internal Diameter	mm	-	-
Typical Counterweight Mass	kg	-	-
Typical Sinker Mass	kg	1400	1400

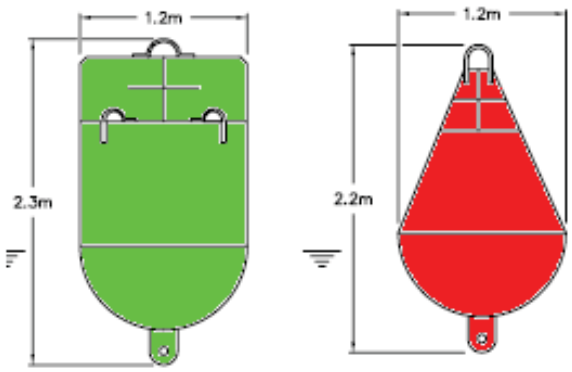

0.9m River - Can/Conical

Dimensional Requirements	Units	Value (Can)	Value (Cone)
Maximum Hull Diameter (W)	m	0.9	0.9
Maximum Buoy Height (H)	m	2.7	3.0
Buoy Air Weight	kg	530	1087
Overall Buoy Silhouette	-	See below	See below
Equipment Requirements			
Minimum Number of Lifting Lugs	-	2	2
Minimum Number of Mooring lugs	-	1	1
Operational			
Minimum / Maximum Mooring depth	m	3 / 17*	3 / 17*
Typical Chain used	mm	20*	20*
Maximum Current	kt	3	3
Lifting Eye Safe Working Load (SWL)	kg	1590	1590
Minimum Lifting Eye Internal Diameter	mm	20	20
Minimum Mooring Eye Internal Diameter	mm	-	-
Typical Counterweight Mass	kg	-	-
Typical Sinker Mass	kg	1500	1500

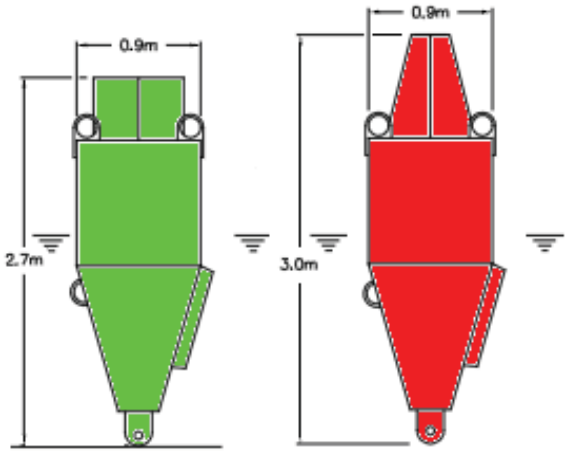

1.4 m Buoy

Dimensional Requirements	Units	Value
Maximum Hull Diameter (W)	m	1.4
Maximum Buoy Height (H)	m	4.2
Buoy Air Weight	kg	1880
Overall Buoy Silhouette	-	See below
Equipment Requirements		
Minimum Number of Handling Lugs	-	-
Minimum Number of Mooring lugs	-	2
Operational		
Minimum / Maximum Mooring depth	m	4 / 77*
Typical Chain used	mm	20*
Lifting Eye Safe Working Load (SWL)	kg	4060
Maximum Current	kt	3
Minimum Lifting Eye Internal Diameter	mm	150
Minimum Mooring Eye Internal Diameter	mm	-
Typical Counterweight Mass	kg	1000
Typical Sinker Mass	kg	1200

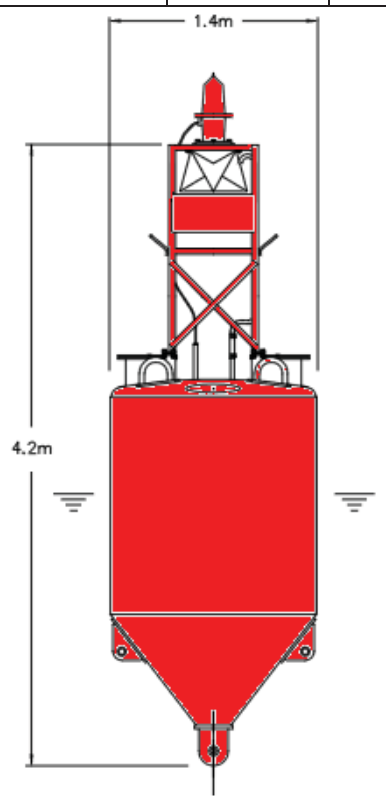

1.4m Stand up Buoy

Dimensional Requirements	Units	Value
Maximum Hull Diameter (W)	m	1.4
Maximum Buoy Height (H)	m	4.2
Buoy Air Weight	kg	1880
Overall Buoy Silhouette	-	See below
Equipment Requirements		
Minimum Number of Handling Lugs	-	-
Minimum Number of Mooring lugs	-	2
Operational		
Minimum / Maximum Mooring depth	m	4 / 77*
Typical Chain used	mm	20*
Maximum Current	kn	3
Lifting Eye Safe Working Load (SWL)	kg	4060
Minimum Lifting Eye Internal Diameter	mm	150
Minimum Mooring Eye Internal Diameter	mm	-
Typical Counterweight Mass	kg	1000
Typical Sinker Mass	kg	1200

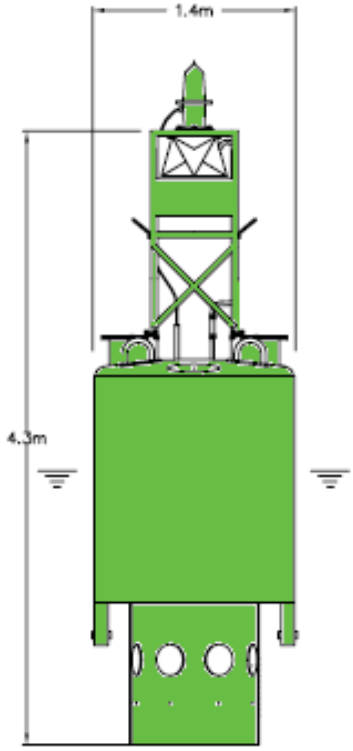

1.5m Discus

Dimensional Requirements	Units	Value
Maximum Hull Diameter (W)	m	1.5
Maximum Buoy Height (H)	m	3.8
Buoy Air Weight	kg	264
Overall Buoy Silhouette	-	See below
Equipment Requirements		
Minimum Number of Handling Lugs	-	-
Minimum Number of Mooring lugs	-	2
Operational		
Minimum / Maximum Mooring depth	m	1.2 / 16*
Typical Chain used	mm	20*
Maximum Current	kt	3
Lifting Eye Safe Working Load (SWL)	kg	1830
Minimum Lifting Eye Internal Diameter	mm	125
Minimum Mooring Eye Internal Diameter	mm	80
Typical Counterweight Mass	kg	-
Typical Sinker Mass	kg	500

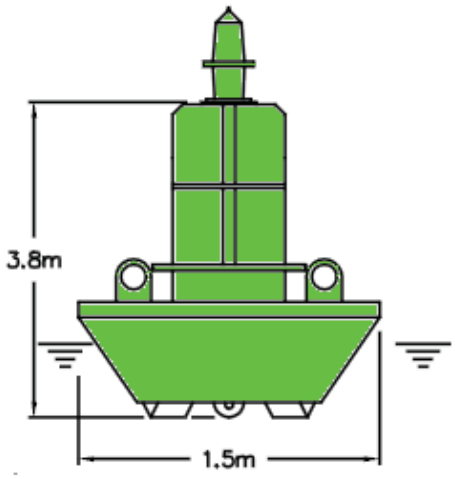

1.6 m Coastal -Can/Conical

Dimensional Requirements	Units	Value (Can)	Value (Cone)
Maximum Hull Diameter (W)	m	1.6	1.6
Maximum Buoy Height (H)	m	3.0	2.8
Buoy Air Weight	kg	801	487
Overall Buoy Silhouette	-	See below	See below
Equipment Requirements			
Minimum Number of Lifting Lugs	-	1	1
Minimum Number of Mooring lugs	-	1	1
Operational			
Minimum / Maximum Mooring depth	m		
Typical Chain used	mm		
Maximum Current	kt		
Maximum Lantern Weight	kg	-	-
Lifting Eye Safe Working Load (SWL)	kg		
Minimum Lifting Eye Internal Diameter	mm	63	63
Minimum Mooring Eye Internal Diameter	mm	-	-
Typical Counterweight Mass	kg	-	-
Typical Sinker Mass	kg	-	-

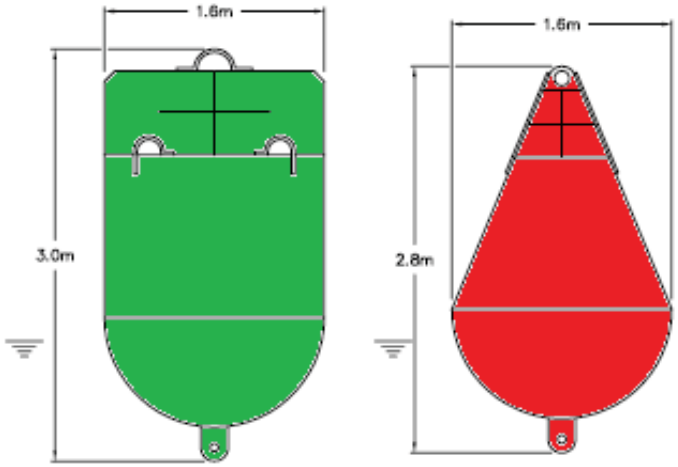

Plastic Buoys

GD1 1.22 -Can/Conical

Dimensional Requirements	**Units**	**Value (Can)**	**Value (Cone)**
Maximum Hull Diameter (W)	m	1.22	1.22
Maximum Buoy Height (H)	m	2.34	2.34
Buoy Air Weight	kg	130	130
Overall Buoy Silhouette	-	See below	See below
Equipment Requirements			
Minimum Number of Lifting Lugs	-	0	0
Minimum Number of Mooring lugs	-	1	1
Operational			
Minimum / Maximum Mooring depth	m	-	-
Typical Chain used	mm	-	-
Maximum Current	kt	-	-
Maximum Lantern Weight	kg	32	32
Lifting Eye Safe Working Load (SWL)	kg	-	-
Minimum Lifting Eye Internal Diameter	mm	-	-
Minimum Mooring Eye Internal Diameter	mm	43	43
Typical Counterweight Mass	kg	-	-
Typical Sinker Mass	kg	-	-

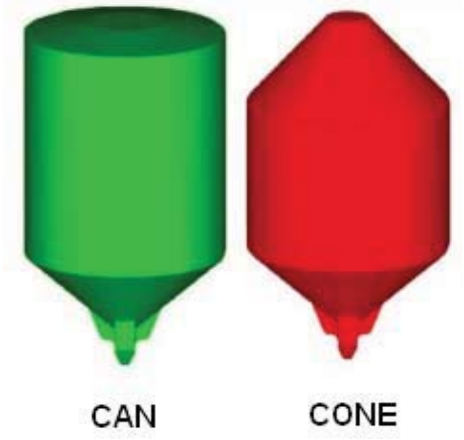

0.22m Spar VEP 2.0

Dimensional Requirements	Units	Value
Maximum Hull Diameter (W)	m	0.16/ 0.22
Maximum Buoy Height (H)	m	3.3
Buoy Weight Range	kg	40
Overall Buoy Silhouette	-	See below
Equipment Requirements		
Minimum Number of Lifting Lugs	-	-
Minimum Number of Mooring lugs	-	1
Operational		
Minimum / Maximum Mooring depth	m	1.5 /20
Typical Chain used	mm	No chain, polypropylene rope 20
Maximum Current	kt	4
Maximum Lantern Weight	kg	2,0
Lifting Eye Safe Working Load (SWL)	kg	No lifting eyes
Minimum Lifting Eye Internal Diameter	mm	-
Minimum Mooring Eye Internal Diameter	mm	18
Typical Counterweight Mass	kg	16
Typical Sinker Mass	kg	500

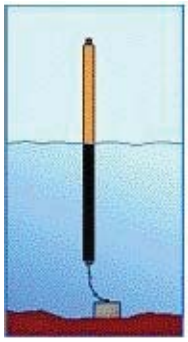

0.35m Spar VPU 225/355

Dimensional Requirements	Units	Value
Maximum Hull Diameter (W)	m	0.23
Maximum Buoy Height (H)	m	4.0
Buoy Weight Range	kg	105
Overall Buoy Silhouette	-	See below
Equipment Requirements		
Minimum Number of Lifting Lugs	-	-
Minimum Number of Mooring lugs	-	1
Operational		
Minimum / Maximum Mooring depth	m	2.5 /50
Typical Chain used	mm	No chain, polypropylene rope 20
Maximum Current	kt	5
Maximum Lantern Weight	kg	10,0
Lifting Eye Safe Working Load (SWL)	kg	No lifting eyes
Minimum Lifting Eye Internal Diameter	mm	-
Minimum Mooring Eye Internal Diameter	mm	18
Typical Counterweight Mass	kg	32
Typical Sinker Mass	kg	1500

Plastic Pontoon Float Buoy (ROLYAN B4872)

Dimensional Requirements	Units	Value
Maximum Hull Length	m	1.83
Maximum Hull Width	m	1.21
Maximum Buoy Height (H)	m	1.21
Buoy Weight Range	kg	90
Overall Buoy Silhouette	-	See below
Equipment Requirements		
Minimum Number of Lifting Lugs	-	-
Minimum Number of Mooring lugs	-	1
Operational		
Minimum / Maximum Mooring depth	m	-
Typical Chain used	mm	-
Maximum Current	kn	-
Maximum Lantern Weight	kg	-
Lifting Eye Safe Working Load (SWL)	kg	-
Minimum Lifting Lug Internal Diameter	mm	-
Minimum Mooring Lug Internal Diameter	mm	-
Typical Counterweight Mass	kg	-
Typical Sinker Mass	kg	200

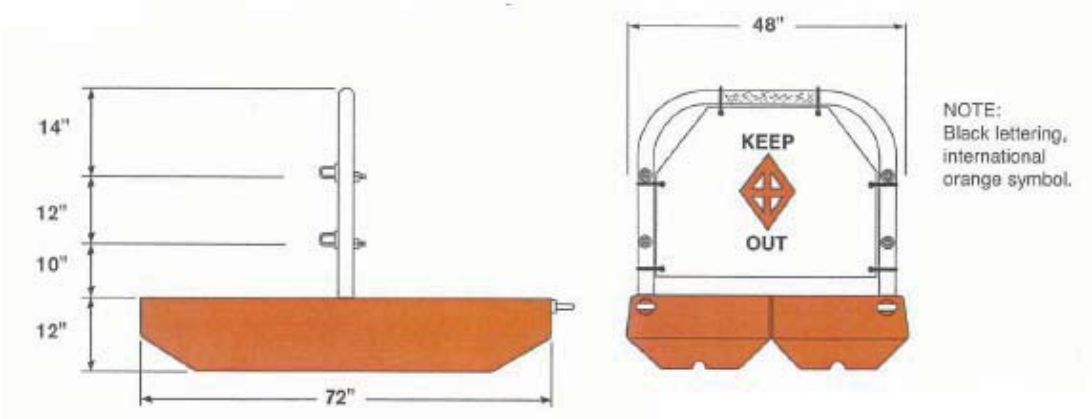

1.2m Mobilis BC1242

Dimensional Requirements	Units	Value
Maximum Hull Diameter (W)	m	1.24
Maximum Buoy Height (H)	m	3.4
Buoy Weight Range (no ballast)	kg	260
Overall Buoy Silhouette	-	See below
Equipment Requirements		
Minimum Number of Lifting Lugs	-	4
Minimum Number of Mooring lugs	-	2
Operational		
Minimum / Maximum Mooring depth	m	-
Typical Chain used	mm	14
Maximum Current	kt	0 - 6
Maximum Lantern Weight	kg	20
Lifting Eye Safe Working Load (SWL)	kg	2400
Minimum Lifting Eye Internal Diameter	mm	75
Minimum Mooring Eye Internal Diameter	mm	40
Typical Counterweight Mass	kg	-
Typical Sinker Mass	kg	150

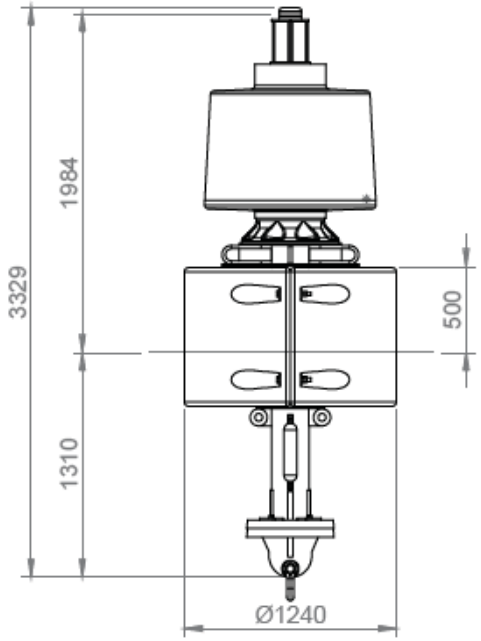

1.25m Mobilis FB1240

Dimensional Requirements	Units	Value
Maximum Hull Diameter (W)	m	1.24
Maximum Buoy Height (H)	m	3.1
Buoy Weight Range (no ballast)	kg	270
Overall Buoy Silhouette	-	See below
Equipment Requirements		
Minimum Number of Lifting Lugs	-	4
Minimum Number of Mooring lugs	-	3
Operational		
Minimum / Maximum Mooring depth	m	-
Typical Chain used	mm	14
Maximum Current	kt	0 - 6
Maximum Lantern Weight	kg	20
Lifting Eye Safe Working Load (SWL)	kg	2400
Minimum Lifting Eye Internal Diameter	mm	75
Minimum Mooring Eye Internal Diameter	mm	40
Typical Counterweight Mass	kg	-
Typical Sinker Mass	kg	150

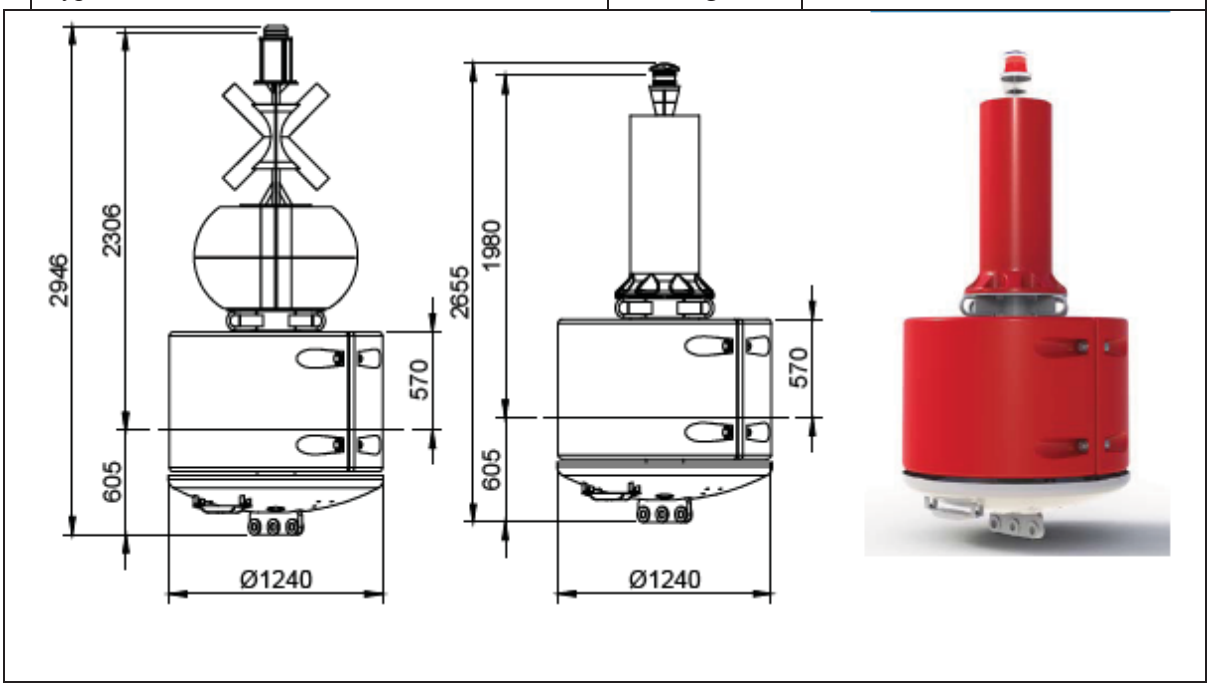

2.0m Mobilis Trackless

Dimensional Requirements	Units	Value
Maximum Hull Diameter (W)	m	-
Maximum Buoy Height (H)	m	-
Buoy Weight Range (no ballast)	kg	40
Overall Buoy Silhouette	-	See below
Equipment Requirements		
Minimum Number of Lifting Lugs	-	-
Minimum Number of Mooring lugs	-	1
Operational		
Minimum / Maximum Mooring depth	m	6/10
Typical Chain used	mm	14
Maximum Current	kt	10
Maximum Lantern Weight	kg	15
Lifting Eye Safe Working Load (SWL)	kg	-
Minimum Lifting Eye Internal Diameter	mm	-
Minimum Mooring Eye Internal Diameter	mm	-
Typical Counterweight Mass	kg	-
Typical Sinker Mass	kg	250-2500

1.9m Mobilis Jet 2000 JPE

Dimensional Requirements	Units	Value
Maximum Hull Diameter (W)	m	1.90
Maximum Buoy Height (H)	m	4.0
Buoy Weight Range (no ballast)	kg	2100
Overall Buoy Silhouette	-	See below
Equipment Requirements		
Minimum Number of Lifting Lugs	-	2
Minimum Number of Mooring lugs	-	2
Operational		
Minimum / Maximum Mooring depth	m	6/30
Typical Chain used	mm	32
Maximum Current	kt	-
Maximum Lantern Weight	kg	-
Lifting Eye Safe Working Load (SWL)	kg	-
Minimum Lifting Eye Internal Diameter	mm	-
Minimum Mooring Eye Internal Diameter	mm	-
Typical Counterweight Mass	kg	-
Typical Sinker Mass	kg	2500

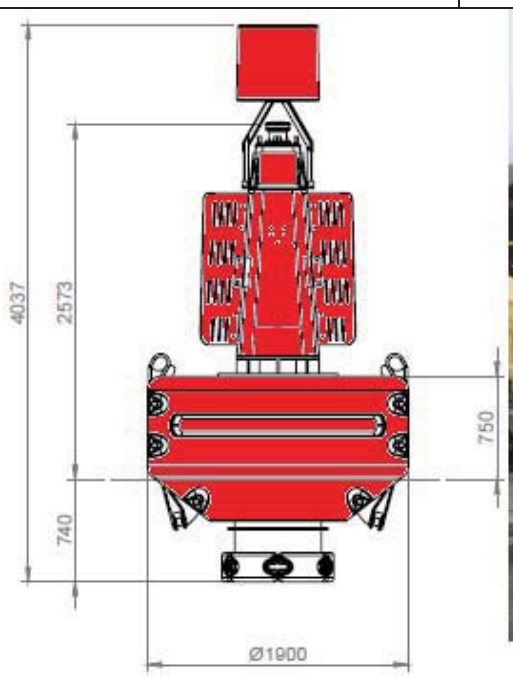

0.5m Plastic Spar SVV-500

Dimensional Requirements	Units	Value
Maximum Hull Diameter (W)	m	0.5
Maximum Buoy Height (H)	m	6.47
Buoy Weight Range (includes internal batter)	kg	430
Overall Buoy Silhouette	-	See below
Equipment Requirements		
Minimum Number of Lifting Lugs	-	1
Minimum Number of Mooring lugs	-	1
Operational		
Minimum / Maximum Mooring depth	m	-
Typical Chain used	mm	26
Maximum Current	kt	1.5
Maximum Lantern Weight	kg	25
Lifting Eye Safe Working Load (SWL)	kg	1,200
Minimum Lifting Eye Internal Diameter	mm	-
Minimum Mooring Eye Internal Diameter	mm	0.09
Typical Counterweight Mass	kg	-
Typical Sinker Mass	kg	1133-2266

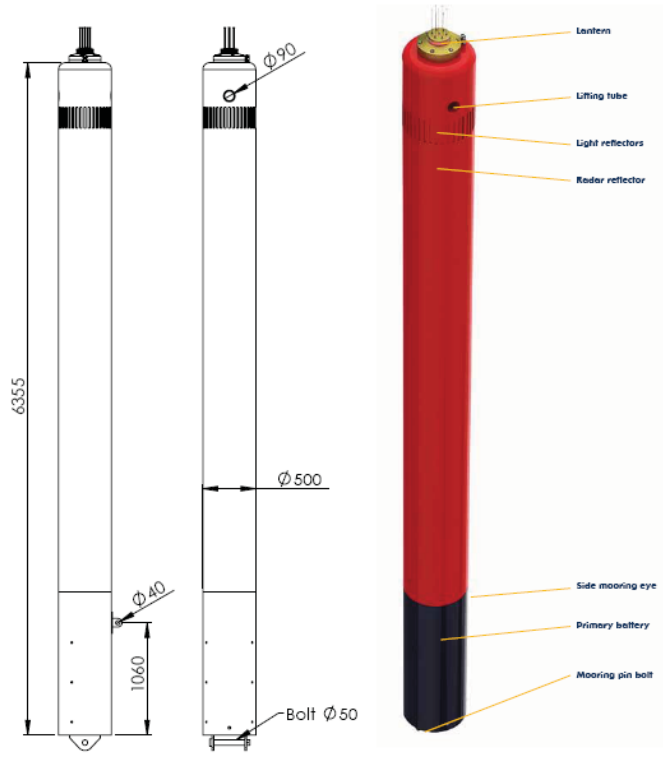

0.25m SB23 Spar

Dimensional Requirements	Units	Value
Maximum Hull Diameter (W)	m	0.247
Maximum Buoy Height (H)	m	1.974
Buoy Weight Range	kg	43
Overall Buoy Silhouette	-	See below
Equipment Requirements		
Minimum Number of Handling Lugs	-	0
Minimum Number of Mooring lugs	-	1
Operational		
Minimum / Maximum Mooring depth	m	3/8
Typical Chain used	mm	14
Maximum Current	kt	-
Maximum Lantern Weight	kg	-
Lifting Eye Safe Working Load (SWL)	kg	-
Minimum Lifting Eye Internal Diameter	mm	-
Minimum Mooring Eye Internal Diameter	mm	32
Typical Counterweight Mass	kg	-
Typical Sinker Mass	kg	500-750

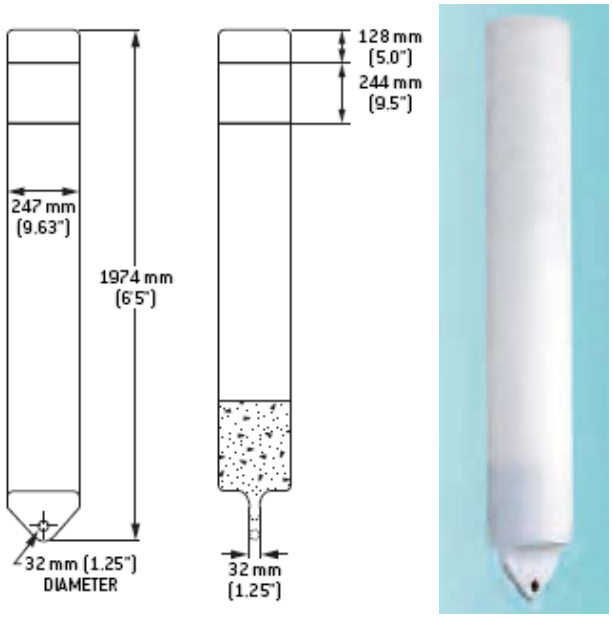

0.4 m WB-068 Plastic

Dimensional Requirements	Units	Value
Maximum Hull Diameter (W)	m	0.412
Maximum Buoy Height (H)	m	0.412
Buoy Weight Range	kg	1.8
Overall Buoy Silhouette	-	See below
Equipment Requirements		
Minimum Number of Lifting Lugs	-	0
Minimum Number of Mooring lugs	-	1
Operational		
Minimum / Maximum Mooring depth	m	-
Typical Chain used	mm	-
Maximum Current	kt	-
Maximum Lantern Weight	kg	-
Lifting Eye Safe Working Load (SWL)	kg	-
Minimum Lifting Eye Internal Diameter	mm	-
Minimum Mooring Eye Internal Diameter	mm	36
Typical Counterweight Mass	kg	-
Typical Sinker Mass	kg	-

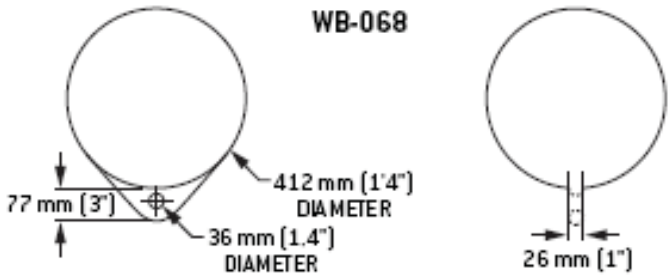

0.3m Spar Plastic (ORT) Can/Conical

Dimensional Requirements	Units	Value
Maximum Hull Diameter Max.(W)	m	0.368
Maximum Hull Diameter Min.(W)	m	0.184
Maximum Buoy Height (H)	m	2.18
Buoy Weight Range	kg	39
Overall Buoy Silhouette	-	See below
Equipment Requirements		
Minimum Number of Lifting Lugs	-	2
Minimum Number of Mooring lugs	-	1
Operational		
Minimum / Maximum Mooring depth	m	3/12
Typical Chain used	mm	14-20
Maximum Current	kt	-
Maximum Lantern Weight	kg	-
Lifting Eye Safe Working Load (SWL)	kg	-
Minimum Lifting Eye Internal Diameter	mm	-
Minimum Mooring Eye Internal Diameter	mm	49
Typical Counterweight Mass	kg	-
Typical Sinker Mass	kg	136-340

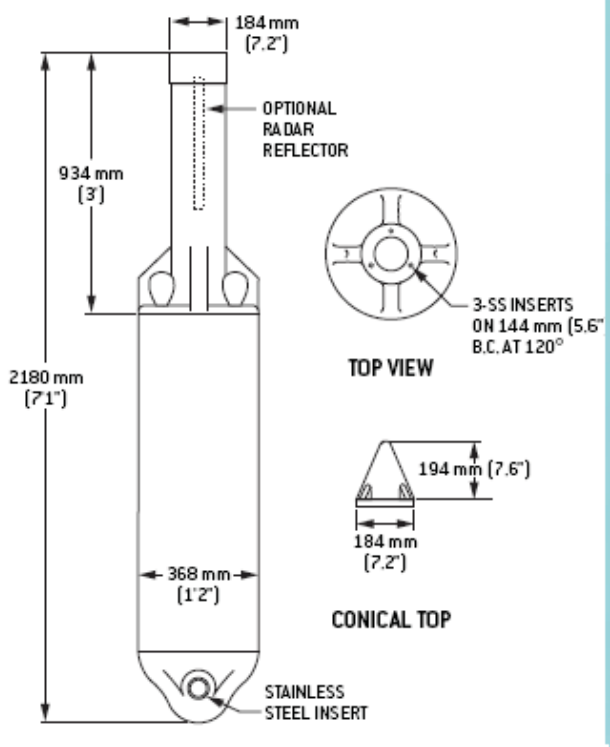

0.4m SB40 Plastic - Can/Conical

Dimensional Requirements	Units	Value
Maximum Hull Diameter (W)	m	0.400
Maximum Buoy Height (H)	m	1.17
Buoy Weight Range	kg	10.4
Overall Buoy Silhouette	-	See below
Equipment Requirements		
Minimum Number of Lifting Lugs	-	1
Minimum Number of Mooring lugs	-	1
Operational		
Minimum / Maximum Mooring depth	m	3/12
Typical Chain used	mm	14
Maximum Current	kt	-
Maximum Lantern Weight	kg	-
Lifting Eye Safe Working Load (SWL)	kg	-
Minimum Lifting Eye Internal Diameter	mm	-
Minimum Mooring Eye Internal Diameter	mm	49
Typical Counterweight Mass	kg	-
Typical Sinker Mass	kg	60-136

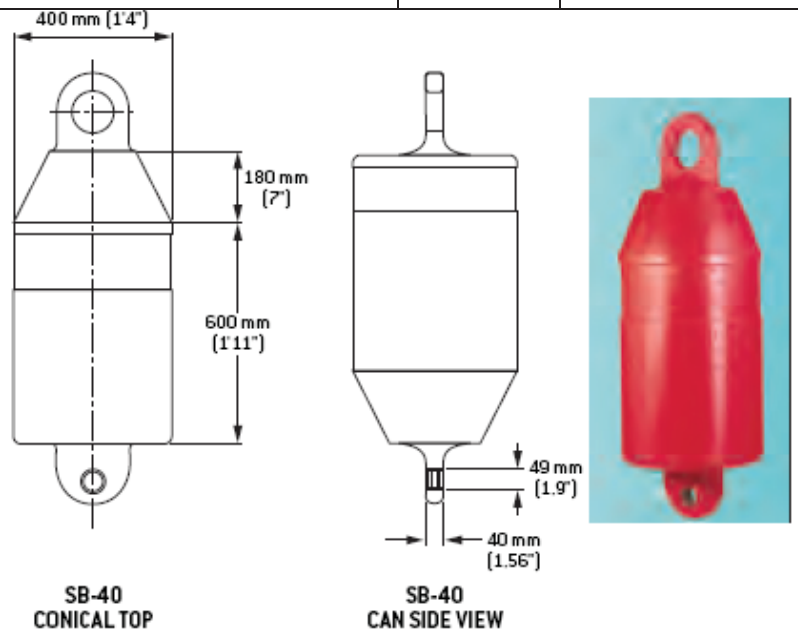

0.75m Plastic (SB75)- Can/Conical

Dimensional Requirements	Units	Value
Maximum Hull Diameter (W)	m	0.747
Maximum Buoy Height (H)	m	1.562
Buoy Weight Range	kg	34
Overall Buoy Silhouette	-	See below
Equipment Requirements		
Minimum Number of Lifting Lugs	-	1
Minimum Number of Mooring lugs	-	1
Operational		
Minimum / Maximum Mooring depth	m	1.5/12.5
Typical Chain used	mm	14-20
Maximum Current	kt	-
Maximum Lantern Weight	kg	-
Lifting Eye Safe Working Load (SWL)	kg	-
Minimum Lifting Eye Internal Diameter	mm	-
Minimum Mooring Eye Internal Diameter	mm	48
Typical Counterweight Mass	kg	-
Typical Sinker Mass	kg	40-90

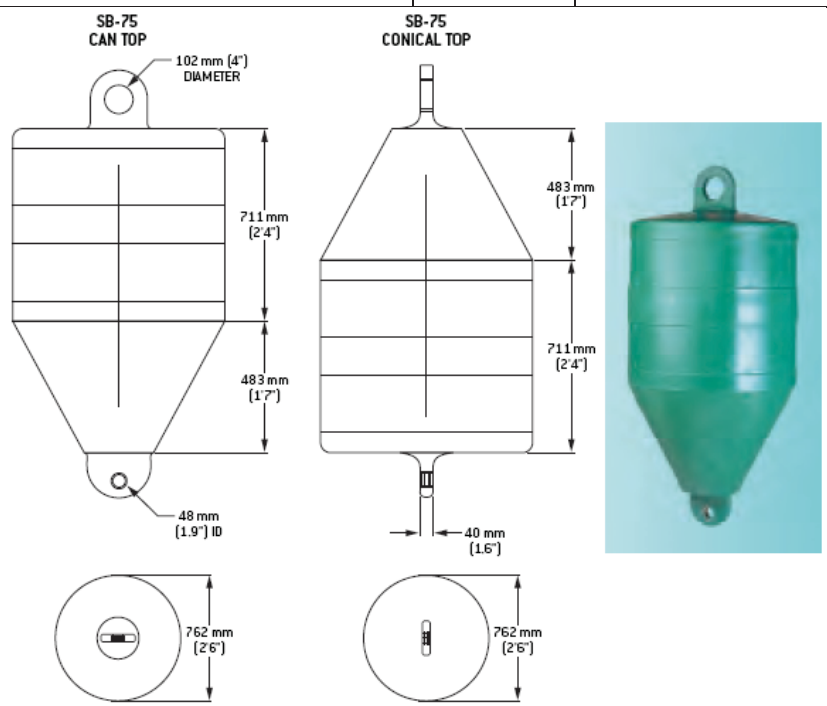

0.9m Tideland /NPL (WB390)

Dimensional Requirements	Units	Value
Maximum Hull Diameter (W)	m	0.747
Maximum Buoy Height (H)	m	1.562
Buoy Weight Range	kg	34
Overall Buoy Silhouette	-	See below
Equipment Requirements		
Minimum Number of Lifting Lugs	-	1
Minimum Number of Mooring lugs	-	1
Operational		
Minimum / Maximum Mooring depth	m	4/12
Typical Chain used	mm	14
Maximum Current	kt	-
Maximum Lantern Weight	kg	5
Lifting Eye Safe Working Load (SWL)	kg	-
Minimum Lifting Eye Internal Diameter	mm	48
Minimum Mooring Eye Internal Diameter	mm	-
Typical Counterweight Mass	kg	-
Typical Sinker Mass	kg	180-220

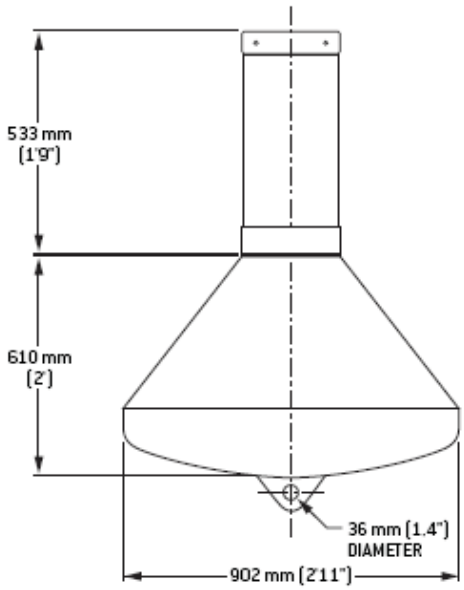

DM-390D

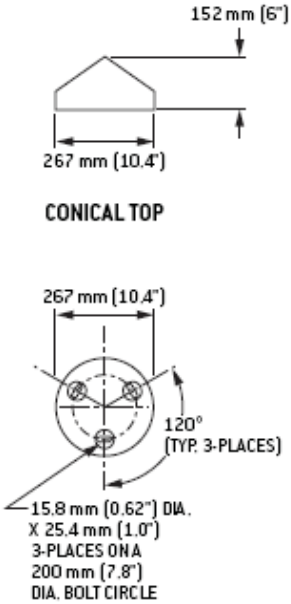

GDI 2m

Dimensional Requirements	Units	Value
Maximum Hull Diameter (W)	m	0.254
Maximum Buoy Height (H)	m	1.83
Buoy Weight Range	kg	39
Overall Buoy Silhouette	-	See below
Equipment Requirements		
Minimum Number of Lifting Lugs	-	0
Minimum Number of Mooring lugs	-	1
Operational		
Minimum / Maximum Mooring depth	m	2/ 10
Typical Chain used	mm	14-20
Maximum Current	kt	-
Maximum Lantern Weight	kg	-
Lifting Eye Safe Working Load (SWL)	kg	-
Minimum Lifting Eye Internal Diameter	mm	-
Minimum Mooring Eye Internal Diameter	mm	-
Typical Counterweight Mass	kg	-
Typical Sinker Mass	kg	150/350

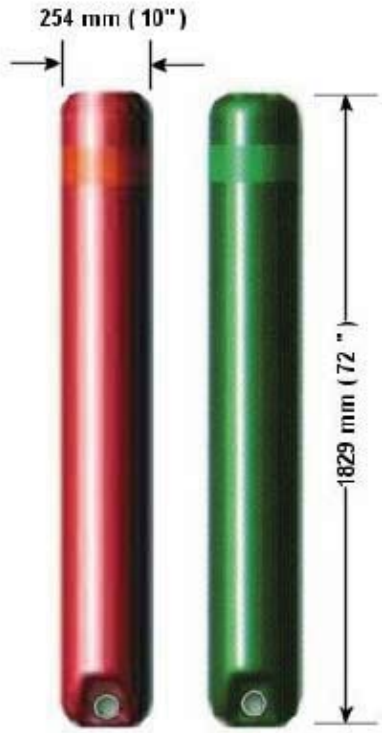

0.75m SB 105 -Can/Conical

Dimensional Requirements	Units	Value (Can)	Value (Cone)
Maximum Hull Diameter (W)	m	0.757	0.757
Maximum Buoy Height (H)	m	1.818	2.046
Buoy Air Weight (no ballast)	kg	45.4	45.4
Overall Buoy Silhouette	-	See below	See below
Equipment Requirements			
Minimum Number of Lifting Lugs	-	1	1
Minimum Number of Mooring lugs	-	1	1
Lifting and Mooring Eyes			
Minimum / Maximum Mooring depth	m	5	5
Typical Chain used	mm	20	20
Maximum Current	kt	3	3
Maximum Lantern Weight	kg	-	-
Lifting Eye Safe Working Load (SWL)	kg	-	-
Minimum Lifting Eye Internal Diameter	mm	-	-
Minimum Mooring Eye Internal Diameter	mm	-	-
Typical Counterweight Mass	kg	-	-
Typical Sinker Mass	kg	1400-1600	1400-1600

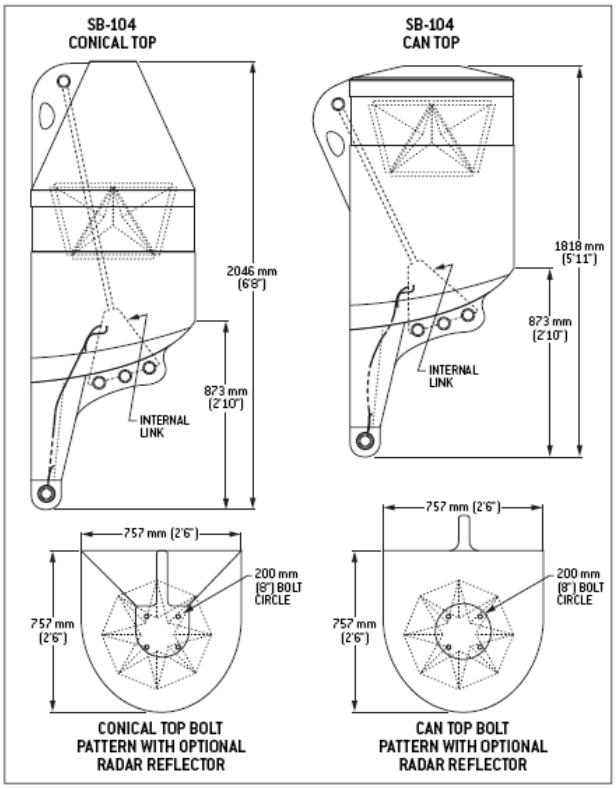

1.5m SB 98 Plastic

Dimensional Requirements	Units	Value
Minimum Hull Diameter (W)	m	0.60
Maximum Hull Diameter (W)	m	1.50
Maximum Buoy Height (H)	m	1.9
Buoy Weight Range	kg	261
Overall Buoy Silhouette	-	(see below)
Equipment Requirements		
Minimum Number of Lifting Lugs	-	1
Minimum Number of Mooring lugs	-	1
Operational		
Minimum / Maximum Mooring depth	m	2/20
Typical Chain used	mm	20
Maximum Current	kt	-
Maximum Lantern Weight	kg	15
Lifting Eye Safe Working Load (SWL)	kg	840
Minimum Lifting Eye Internal Diameter	mm	100
Minimum Mooring Eye Internal Diameter	mm	55
Typical Counterweight Mass	kg	-
Typical Sinker Mass	kg	1000-3000

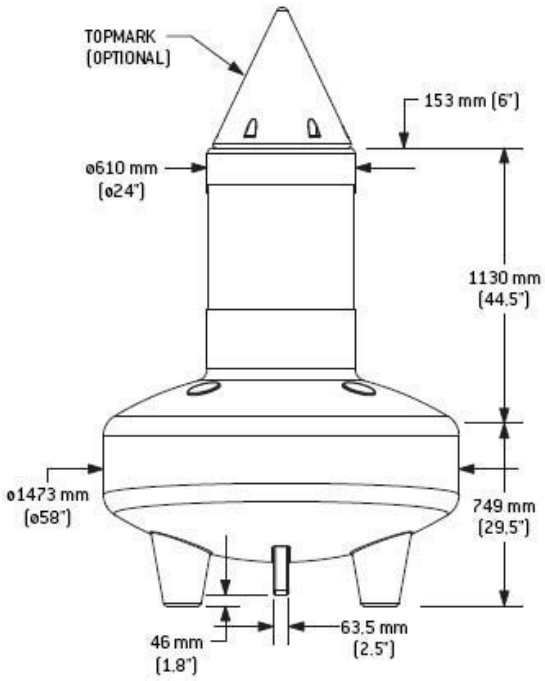

Tideland SB60

Dimensional Requirements	Units	Value
Minimum Hull Diameter (W)	m	0.60
Maximum Buoy Height (H)	m	4.09
Buoy Weight Range	kg	95
Overall Buoy Silhouette	-	(see below)
Equipment Requirements		
Minimum Number of Lifting Lugs	-	1
Minimum Number of Handling Lugs	-	0
Minimum Number of Mooring lugs	-	1
Minimum Hull Diameter (W)	m	0.60
Operational		
Minimum / Maximum Mooring depth	m	3/12
Typical Chain used	mm	14-20
Maximum Current	kt	-
Maximum Lantern Weight	kg	15
Lifting Eye Safe Working Load (SWL)	kg	-
Minimum Lifting Eye Internal Diameter	mm	-
Minimum Mooring Eye Internal Diameter	mm	-
Typical Counterweight Mass	kg	-
Typical Sinker Mass	kg	1065-2267

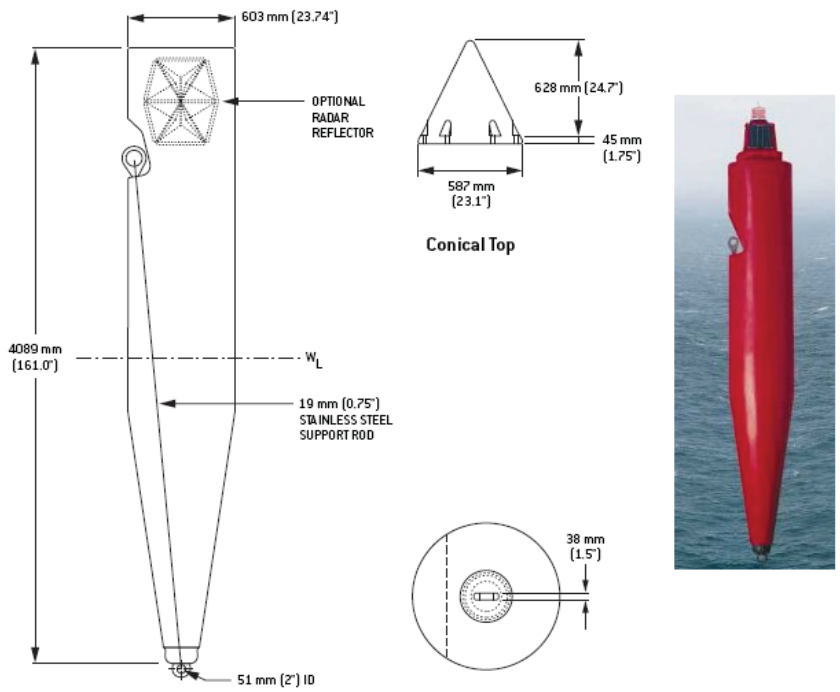

Tideland SB1500

Dimensional Requirements	Units	Value
Minimum Hull Diameter (W)	m	0.60
Maximum Hull Diameter (W)	m	1.50
Maximum Buoy Height (H)	m	2.8
Buoy Weight Range	kg	235 - 287
Overall Buoy Silhouette	-	(see below)
Equipment Requirements		
Minimum Number of Lifting Lugs	-	1
Minimum Number of Mooring lugs	m	1
Operational		
Minimum / Maximum Mooring depth	m	2/20
Typical Chain used	mm	20
Maximum Current	kt	-
Maximum Lantern Weight	kg	15
Lifting Eye Safe Working Load (SWL)	kg	840
Minimum Lifting Eye Internal Diameter	mm	100
Minimum Mooring Eye Internal Diameter	mm	55
Typical Counterweight Mass	kg	-
Typical Sinker Mass	kg	1000-3000

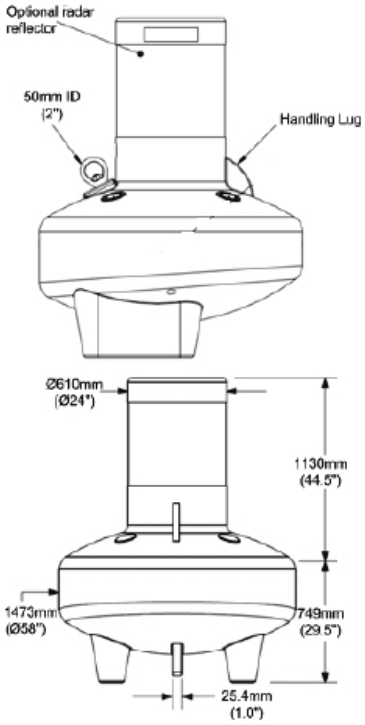

Tideland SB138

Dimensional Requirements	Units	Value
Minimum Hull Diameter (W)	m	-
Maximum Hull Diameter (W)	m	1.75
Maximum Buoy Height (H)	m	2.8
Buoy Weight Range	kg	454
Overall Buoy Silhouette	-	(see below)
Equipment Requirements		
Minimum Number of Lifting Lugs	-	2
Minimum Number of Mooring lugs	m	2
Operational		
Minimum / Maximum Mooring depth	m	3/65
Typical Chain used	mm	26
Maximum Current	kt	6
Maximum Lantern Weight	kg	20
Lifting Eye Safe Working Load (SWL)	kg	-
Minimum Lifting Eye Internal Diameter	mm	-
Minimum Mooring Eye Internal Diameter	mm	-
Typical Counterweight Mass	kg	-
Typical Sinker Mass	kg	1800

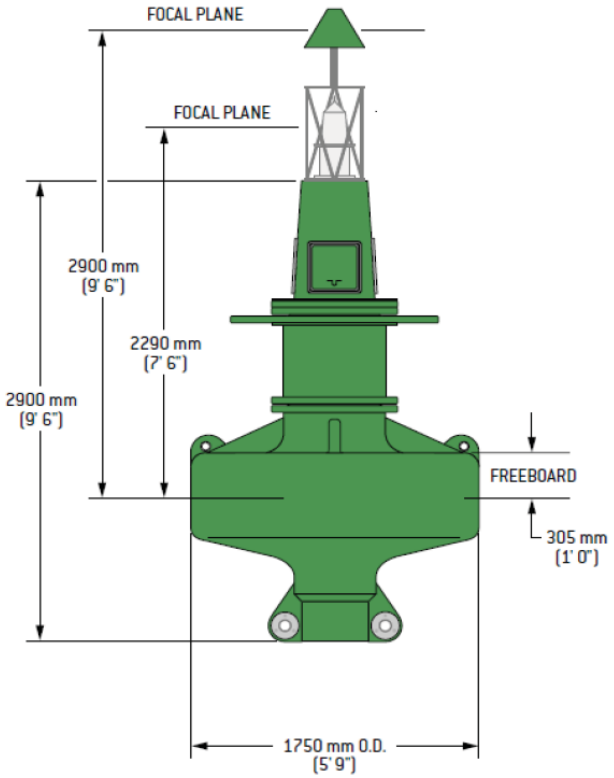

Tideland SB285

Dimensional Requirements	Units	Value
Minimum Hull Diameter (W)	m	-
Maximum Hull Diameter (W)	m	2.50
Maximum Buoy Height (H)	m	6.0
Buoy Weight Range	kg	2400
Overall Buoy Silhouette	-	(see below)
Equipment Requirements		
Minimum Number of Lifting Lugs	-	2
Minimum Number of Mooring lugs	m	2
Operational		
Minimum / Maximum Mooring depth	m	10/75
Typical Chain used	mm	26-32
Maximum Current	kt	6
Maximum Lantern Weight	kg	20
Lifting Eye Safe Working Load (SWL)	kg	-
Minimum Lifting Eye Internal Diameter	mm	-
Minimum Mooring Eye Internal Diameter	mm	-
Typical Counterweight Mass	kg	-
Typical Sinker Mass	kg	2000-3000

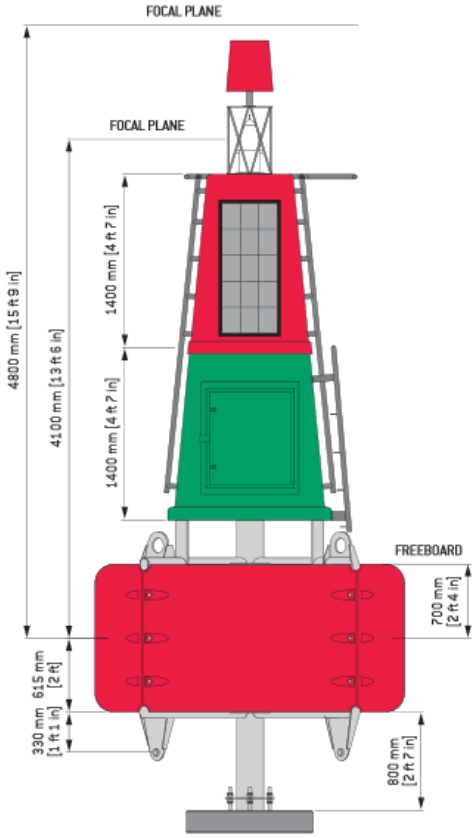

Gilman 5CFR

Dimensional Requirements	Units	Value
Minimum Hull Diameter (W)	m	0.76
Maximum Hull Diameter (W)	m	0.76
Maximum Buoy Height (H)	m	1.85
Buoy Weight Range	kg	50
Overall Buoy Silhouette	-	(see below)
Equipment Requirements		
Minimum Number of Lifting Lugs	-	2
Minimum Number of Mooring lugs	-	1
Operational		
Minimum / Maximum Mooring depth	m	3/ 12.5
Typical Chain used	mm	12
Maximum Current	kt	-
Maximum Lantern Weight	kg	-
Lifting Eye Safe Working Load (SWL)	kg	-
Minimum Lifting Eye Internal Diameter	mm	-
Minimum Mooring Eye Internal Diameter	mm	-
Typical Counterweight Mass	kg	-
Typical Sinker Mass	kg	226

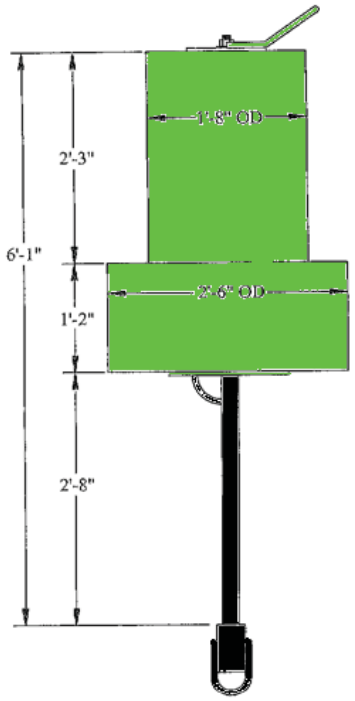

Gilman 5x9

Dimensional Requirements	Units	Value
Minimum Hull Diameter (W)	m	0.85
Maximum Hull Diameter (W)	m	1.63
Maximum Buoy Height (H)	m	2.63
Buoy Weight Range	kg	660-670
Overall Buoy Silhouette	-	(see below)
Equipment Requirements		
Minimum Number of Lifting Lugs	-	2
Minimum Number of Mooring lugs	-	1
Operational		
Minimum / Maximum Mooring depth	m	10/ 45
Typical Chain used	mm	26-32
Maximum Current	kt	-
Maximum Lantern Weight	kg	10
Lifting Eye Safe Working Load (SWL)	kg	-
Minimum Lifting Eye Internal Diameter	mm	-
Minimum Mooring Eye Internal Diameter	mm	-
Typical Counterweight Mass	kg	-
Typical Sinker Mass	kg	100

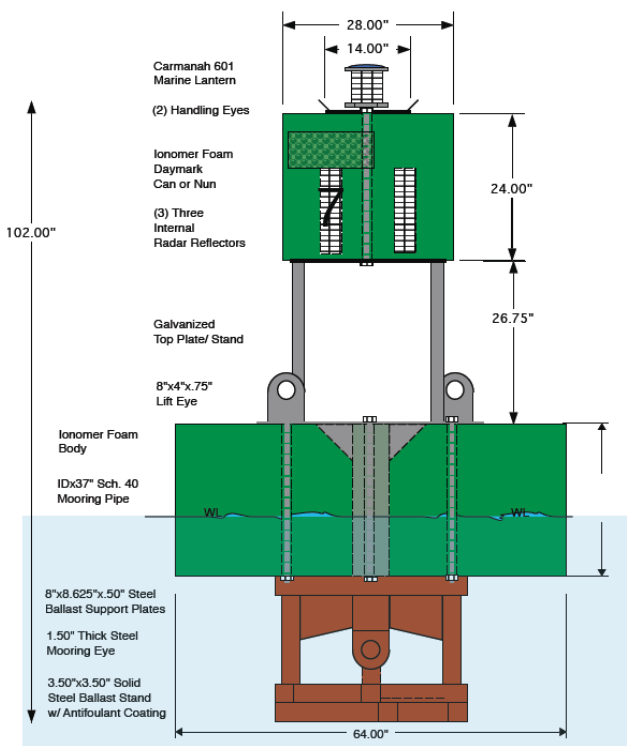

0.6m Plastic Ice Spar

Dimensional Requirements	**Units**	**Value (14 ft)**	**Value (18 ft)**	**Value (21 ft)**
Maximum Hull Diameter (W)	m	0.60	0.60	0.60
Maximum Buoy Height (H)	m	4.26	5.48	6.40
Buoy Weight Range	kg	508	703	850
Overall Buoy Silhouette	-	(see below)	(see below)	(see below)
Equipment Requirements				
Minimum Number of Lifting Lugs	-	1	1	1
Minimum Number of Mooring lugs	-	1	1	1
Operational				
Minimum / Maximum Mooring depth	m	3/15	4/30	5/40
Typical Chain used	mm	26-32	26-32	26-32
Maximum Current	kt	1.4	1.4	1.4
Maximum Lantern Weight	kg	15	15	15
Lifting Eye Safe Working Load (SWL)	kg	840	840	840
Minimum Lifting Eye Internal Diameter	mm	100	100	100
Minimum Mooring Eye Internal Diameter	mm	55	55	55
Typical Counterweight Mass	kg	-	-	-
Typical Sinker Mass	kg	600/1000	600/1200	800/1800

Shandong Buoy

Dimensional Requirements	Units	Value
Minimum Hull Diameter (W)	m	-
Maximum Hull Diameter (W)	m	1.50
Maximum Buoy Height (H)	m	5.5
Buoy Weight Range	kg	400-700
Overall Buoy Silhouette	-	(see below)
Equipment Requirements		
Minimum Number of Lifting Lugs	-	2
Minimum Number of Mooring lugs	-	2
Operational		
Minimum / Maximum Mooring depth	m	-
Typical Chain used	mm	28-32
Maximum Current	kt	4
Maximum Lantern Weight	kg	20
Lifting Eye Safe Working Load (SWL)	kg	840
Minimum Lifting Lug Internal Diameter	mm	100
Minimum Mooring Lug Internal Diameter	mm	55
Typical Counterweight Mass	kg	100-250
Typical Sinker Mass	kg	3000-4000

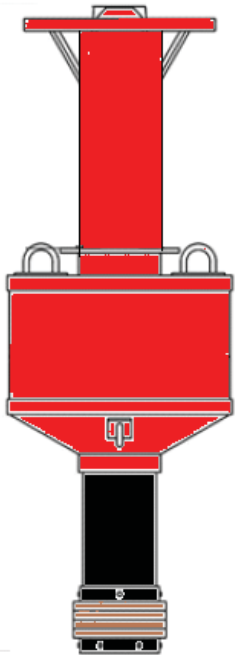

Sealite Trident 1400 Buoy

Dimensional Requirements	Units	Value
Maximum Hull Diameter (W)	m	1.40
Maximum Buoy Height (H)	m	5.5
Buoy Weight Range	kg	1000 (with ballast)
Overall Buoy Silhouette	-	(see below)
Equipment Requirements		
Minimum Number of Lifting Lugs	-	2
Minimum Number of Mooring lugs	-	2
Operational		
Minimum / Maximum Mooring depth	m	-
Typical Chain used	mm	28-32
Maximum Current	kt	4
Maximum Lantern Weight	kg	20
Lifting Eye Safe Working Load (SWL)	kg	2400
Minimum Lifting Eye Internal Diameter	mm	100
Minimum Mooring Eye Internal Diameter	mm	55
Typical Counterweight Mass	kg	100-250
Typical Sinker Mass	kg	3000-4000

GDI 1500 Skirt Buoy

Dimensional Requirements	Units	Value
Maximum Hull Diameter (W)	m	1.50
Maximum Buoy Height (H)	m	3.7
Buoy Weight Range	kg	500
Overall Buoy Silhouette	-	(see below)
Equipment Requirements		
Minimum Number of Lifting Lugs	-	2
Minimum Number of Mooring lugs	-	2
Operational		
Minimum / Maximum Mooring depth	m	-
Typical Chain used	mm	26-32
Maximum Current	kt	4
Maximum Lantern Weight	kg	20
Lifting Eye Safe Working Load (SWL)	kg	2636
Minimum Lifting Eye Internal Diameter	mm	100
Minimum Mooring Eye Internal Diameter	mm	42
Typical Counterweight Mass	kg	100-250
Typical Sinker Mass	kg	2000-3000

Appendix D:

Supplementary Buoy information – G.I.S. (Geographic Information System) Interface

Purpose:

The G.I.S. tool provides the detailed buoy data from Appendix C in a digital format.

In the case of disparity between the data in Appendix C and the online tool, Appendix C data shall have priority.

Notes:

The information in the G.I.S. tool is not to be used for navigation.

In some cases, buoy positions vary annually due to shifting channels or other local conditions. These buoys, termed "uncharted", are not shown in the G.I.S. tool as their latitude and longitude information is not included in the database. Information on "uncharted" buoys is included in Appendix C.

Instructions to access and use G.I.S. tool:

The interface can be accessed at the following web-page; use *buoy2014* for the username and *buoy_2014* for the password.

http://www.marinfo.gc.ca/buoys

Use Internet Explorer or current version of Firefox as browser.

Basic operation:

Moving the map is accomplished by clicking and dragging with the mouse in the visualisation area.

Moving to and zooming in an area is done by either double-clicking on a location in the geographic visualisation area, by rolling the mouse scroll wheel up while over the desired region, or by clicking on the "+" button if the center area is desired. To unzoom, roll the mouse wheel down while over the visualisation area, or click on the "-" button.

To move to a specific contract area, a combo box in the upper right of the display contains a list of the available contract areas. Clicking on one of those moves and zooms to the buoys contained in that area. It may be necessary to unzoom and move a bit to have a complete view of the area. Clicking on "all" in the list returns to the view of all the contract areas.

Exporting data for a contract area is done by selecting that area as explained in the previous paragraph, and clicking on the export button right of the combo list box. A choice of output format is then offered. A web view of the selection appears if “html” is selected, an Adobe PDF document can be selected with “pdf”, and an Excel-compatible tabular format can be obtained with the “csv” button (comma separated values). The “cancel” button close the exportation prompt without doing anything.

To select and export specific buoys, press the “Polygon” button in the upper right section. You are now in “polygon mode”. Then click on 3 or more locations to delimit the shape of the desired section. Double click on the same location to end the current polygon delimitation. You can add as many polygons as desired the same way while in this mode. To end the polygon mode, re-click on the “Polygon” button. The cursor should now return to normal. Buoys can also by selected individually by clicking on them while not in polygon mode. The zoom level must be sufficient to allow individual selection. Clicking on the same buoy again unselects it. The “Export” button right of the “Polygon” button starts the exportation process, and the same choice of output formats is offered like when exporting whole contract areas. The “Clear” button below the “Polygon” unselects the buoys.

To calculate a distance between two points or for travel between multiple points, click on the “Distance” button in the upper right area. You while now be in “distance mode” until you click on the button again. By clicking on different position in the geographic view area, you will obtain the distance to travel between them, or to follow that route if three or more points are selected. The distance appears in the lower right part of the display.

To obtain info on a specific buoy, with the mouse, hover on the desired buoy. Summary information should appear in the lower right area if the map is sufficiently zoomed to allow being over a single buoy. More detailed info can be obtained by clicking the “Details” button in the lower right area if you avoid hovering over other buoys before clicking it. The description can be scrolled with the scroll bar at the right of the description window, and a “Close” button at the bottom of the text hides the description.

To view this help, click on the “[?]” link in the lower right area.

The coordinates of the mouse are displayed in the upper left portion of the geographical view area.

The contracting areas can be hidden or shown again by toggling the “Zones” checkbox in the lower right area.

The language can be switched to French and back to English by clicking on the link at the bottom of the upper right area.

Annex "E-1"
Financial Bid

For contracts with start dates in 2014 only.

Financial Bid "E-1" is applicable to all sub-areas and areas except as indicated in Annex "E-2" and Annex "E-3".

Contract Sub-Area/Area Name:				
Contract Sub-Area Number (if applicable):		**Contract Area Number:**		**Buoy Quantity:**

	Year 1	Year 2	Year 3	
Firm Lot Prices	Contract Award Date to July 01, 2015	July 02, 2015 to July 01, 2016	July 02, 2016 to July 01, 2017	Total for three (3) years
ITEM 1 - A Servicing Unscheduled: See Note 1 below	$	$	$	$
ITEM 1 - B Servicing Scheduled:	$	$	$	$
ITEM 1 - C Decommissioning:	$	$	$	$
ITEM 1 - D Commissioning:	$	$	$	$
ITEM 1 - Total: (A+B+C+D) for 3 years				$
ITEM 2 For Material Storage at Contractor's Facility and transportation from Contractors facility To/From points of service: Refer to Appendix C and Annex A, Section 10.	$	$	$	$
ITEM 3 For Material Storage at CCG Base and transportation from CCG Base To/From points of service: Refer to Appendix C and Annex A, Section 10.	$	$	$	$
Total: ITEM 1 (A+B+C+D) plus ITEM 2, for three (3) years.				$
Total: ITEM 1 (A+B+C+D) plus ITEM 3, for three (3) years.				$

Signed: _____ Date: _____ Telephone: _____

Name: _____ Fax #: _____

Company Name: _____ Email: _____

Notes:

1. Refer to 'Outage History' in Appendix C for information on number of repairs in each work Area. Canada shall not be held accountable in the event that the number of repairs required exceeds the number of repairs listed in Appendix C.
2. Bidders must complete all above boxes without exception. In certain areas, storage at the CCG depot may not be possbile. Refer to Appendix C for pertinent information.

Annex "E-2"
Financial Bid

For contracts with Start Dates in July 2015 only.
Financial Bid "E-2" is only applicable to the sub-areas or areas indicated on the following page.

Contract Sub-Area/Area Name:				
Contract Sub-Area Number (if applicable):		**Contract Area Number:**		**Buoy Quantity:**
	Year 1	Year 2	Year 3	
Firm Lot Prices	Contract Award Date to July 01, 2015	July 02, 2015 to July 01, 2016	July 02, 2016 to July 01, 2017	Total for two (2) years
ITEM 1 - A Servicing Unscheduled: See Note 1 below	**N/A**	$	$	
ITEM 1 - B Servicing Scheduled	**N/A**	$	$	
ITEM 1 - C Decommissioning	**N/A**	$	$	
ITEM 1 - D Commissioning	**N/A**	$	$	
ITEM 1 - Total: (A+B+C+D) for 2 years				$
ITEM 2 For Material Storage at Contractor's Facility and transportation from Contractors facility To/From points of service: Refer to Appendix C and Annex A, Section 10.	**N/A**	$	$	$
ITEM 3 For Material Storage at CCG Base and transportation from CCG Base To/From points of service: Refer to Appendix C and Annex A, Section 10.	**N/A**	$	$	$
Total: ITEM 1 (A+B+C+D) plus ITEM 2, for two (2) years.				$
Total: ITEM 1 (A+B+C+D) plus ITEM 3, for two (2) years.				$

Signed: _____ Date: _____ Telephone: _____

Name: _____ Fax #: _____

Company Name: _____ Email: _____

Notes:

1. Refer to 'Outage History' in Appendix C for information on number of repairs in each work Area. Canada shall not be held accountable in the event that the number of repairs required exceeds the number of repairs listed in Appendix C.
2. Bidders must complete all above boxes without exception. In certain areas, storage at the CCG depot may not be possbile. Refer to Appendix C for pertinent information.

For contracts with Start Dates in July 2015 only.

Sous-zone ou Zone	Nom de la sous-zone ou zone
C-40	îles-de-la-Madeleine
A-1	Grand Manan/St. Croix/Maces Bay
A-5	St. John Harbour/Bay of Fundy
A-6	Digby to St. Marys
A-7	Yarmouth Harbour and Approach
A-8	Chebogue to Lower East Pubnico
A-9	Lower Woods Harbour to Clarks Harbour
A-10	Barrington Bay to Lockeport
A-11	Port Joli to Lunenburg
A-12	Mahone Bay
A-13	West Dover to Ketch Harbour
A-14	Halifax to Three Fathom Harbour
A-15	East Chezzetcook to Little Harbour
A-16	Ship Harbour to Beaver Harbour
A-17	Ecum Secum to St. Mary's River
A-18	Port Bickerton to Upper Whitehead
A-19	Dover to Guysborough
A-20	Canso Causeway to L'Archevesque
A-21	Fouchu to Main a Dieu
A-22	Mira River
A-23	Port Morien to Sydney
A-24	Northern Bras D'or including St. Patricks, St. Andrews, Great and Little Bras D'or
A-25	Bras D'or Lakes including Lennox Passage (Coastal)
A-26	Ingonish to Dingwall
A-27	Cheticamp to Margaree
A-28	Inverness to Port Hood
A-29	Canso to Cape George
A-30	Pictou, Caribou, Merigomish
A-31	Toney River to Wallace
A-32	Pugwash Harbour and Northport
A-33	Tidnish to Robichaud
A-34	Shediac and Cocagne
A-35	Boutouche Harbour and River
A-36	Richibucto (including Alduoane)
A-37	St. Louis to Kouchibouguac
A-38	Miramichi Bay and River
A-39	Escuminac to Portage Gully
A-40	Tabusintac to Pokemouche
A-41	Shippegan, Caraquet, Miscou
A-42	Bathurst to Dalhousie
A-44	Conway Inlet to Malpeque/Darnley
A-48	East Point
A-50	Annandale to Cape Bear
A-51	Murray Harbour & Wood Islands
A-52	Pinette, Pownal, Orwell
A-55	Cape Egmont to Miminegash

Annex "E-3"
Financial Bid

For contracts with start date in July 2016 only.

Financial Bid "E-3" is only applicable to the sub-areas or areas on the following page. All boxes must be completed without exception:

Contract Sub-Area / Area Name:				
Contract Sub-Area Number (if applicable):		**Contract Area Number:**		**Buoy Quantity:**
	Year 1	Year 2	Year 3	
Firm Lot Prices	Contract Award Date to July 01, 2015	July 02, 2015 to July 01, 2016	July 02, 2016 to July 01, 2017	Total for one year
ITEM 1 - A Servicing Unscheduled: See Note 1 below	**N/A**	**N/A**	$	$
ITEM 1 - B Servicing Scheduled	**N/A**	**N/A**	$	$
ITEM 1 - C Decommissioning	**N/A**	**N/A**	$	$
ITEM 1 - D Commissioning	**N/A**	**N/A**	$	$
ITEM 1 - Total: (A+B+C+D) for 1 year				$
ITEM 2 For Material Storage at Contractor's Facility and transportation from Contractors facility To/From points of service: Refer to Appendix C and Annex A, Section 10.	**N/A**	**N/A**	$	$
ITEM 3 For Material Storage at CCG Base and transportation from CCG Base To/From points of service: Refer to Appendix C and Annex A, Section 10.	**N/A**	**N/A**	$	$
Total: ITEM 1 (A+B+C+D) plus ITEM 2, for one (1) year.				$
Total: ITEM 1 (A+B+C+D) plus ITEM 3, for one (1) year.				$

Signed: _____ Date: _____ Telephone: _____

Name: _____ Fax #: _____

Company Name: _____ Email: _____

Notes:

1. Refer to 'Outage History' in Appendix C for information on number of repairs in each work Area. Canada shall not be held accountable in the event that the number of repairs required exceeds the number of repairs listed in Appendix C.
2. Bidders must complete all above boxes without exception. In certain areas, storage at the CCG depot may not be possbile. Refer to Appendix C for pertinent information.

For contracts with start date in July 2016 only.

Sub-Area or Area	Zone Name
A-43	Tignish to Cascumpeque
A-45	New London & Rustico
A-46	Covehead and Tracadie
A-47	Savage Harbour & St. Peters Harbour
A-49	Souris, Fortune and Howe Bay
A-53	Charlottetown Harbour
A-54	Victoria to Summerside