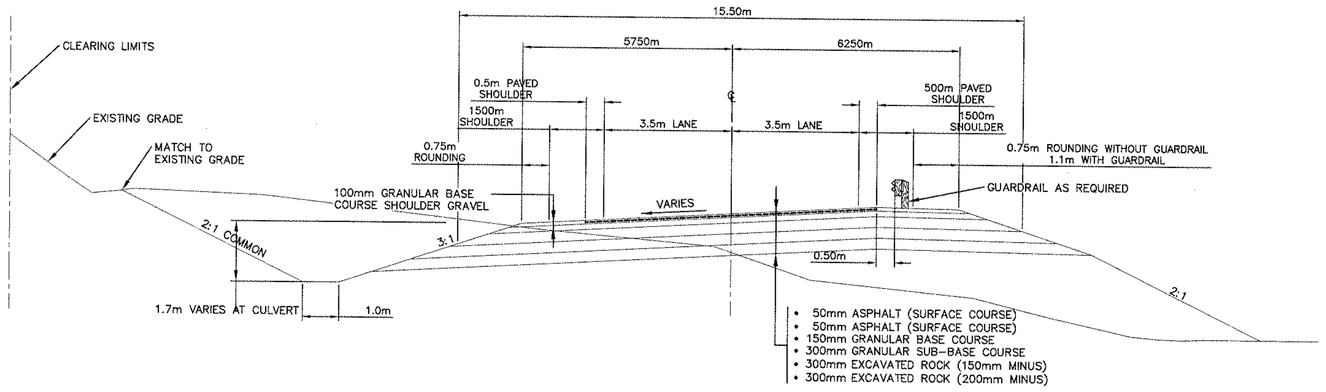

1 — TYPICAL SECTION— RE-ALIGNED HIGHWAY 430S SUPER-ELEVATED
1:100

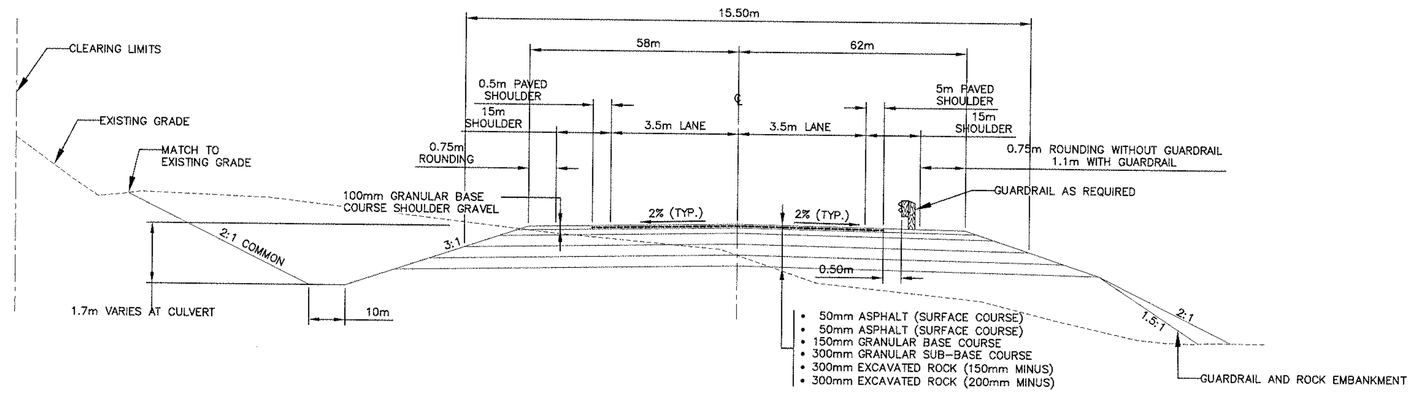

2 — TYPICAL SECTION— RE-ALIGNED HIGHWAY 430S (COMMON MATERIAL)
1:100

NOTES:
1. STRIPPED MATERIAL TO BE REMOVED FOR FULL WIDTH OF CUT OR WITHIN SUBGRADE WIDTH ON FILLS LESS THAN 1.3m.
2. ON NEW SLOPE > 10% TOPSOIL TO BE REMOVED AND ROCK EXCAVATED 300mm DEPTH OVER SUBGRADE WIDTH.

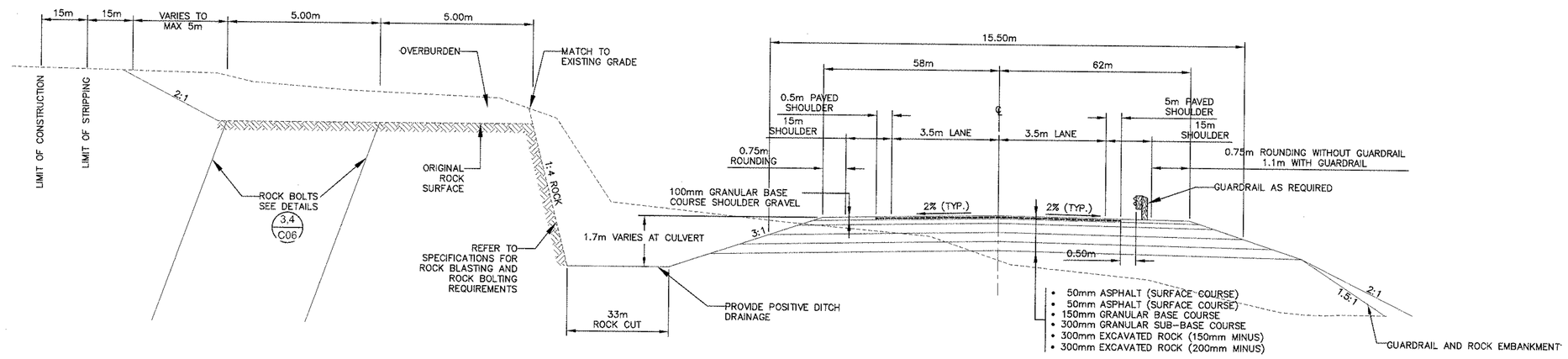

3 — TYPICAL SECTION— RE-ALIGNED HIGHWAY 430S (ROCK CUT)
1:100

NOTES:
1. STRIPPED MATERIAL TO BE REMOVED FOR FULL WIDTH OF CUT OR WITHIN SUBGRADE WIDTH ON FILLS LESS THAN 1.3m.
2. ON NEW SLOPE > 10% TOPSOIL TO BE REMOVED AND ROCK EXCAVATED 300mm DEPTH OVER SUBGRADE WIDTH.

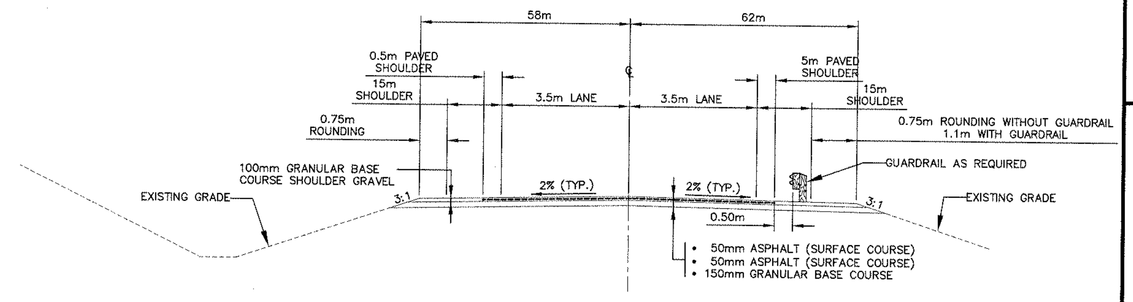

4 — TYPICAL SECTION— ASPHALT CONNECTION TO EXISTING
1:100

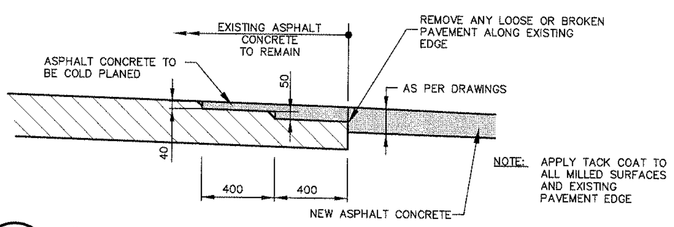

5 — DETAIL— BLEND TO EXISTING ASPHALT – AT WIDENING AREAS
NTS

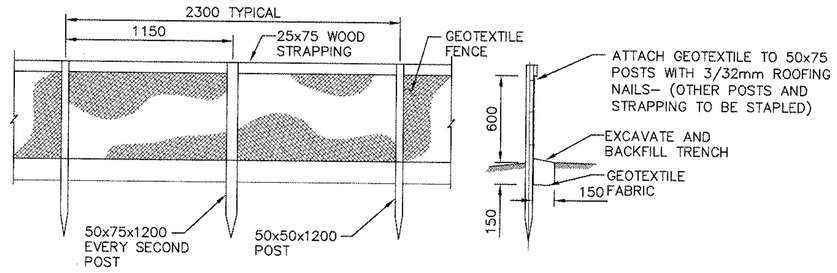

6 — DETAIL— SEDIMENT CONTROL FENCE
1:25

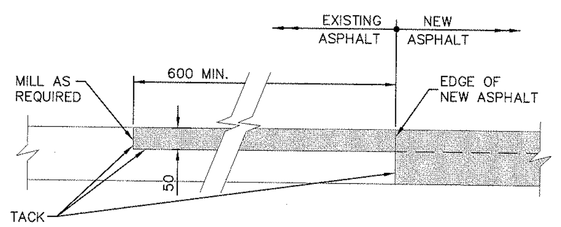

7 — DETAIL— ASPHALT TRANSITION AT TIE-IN AREAS
N.T.S.

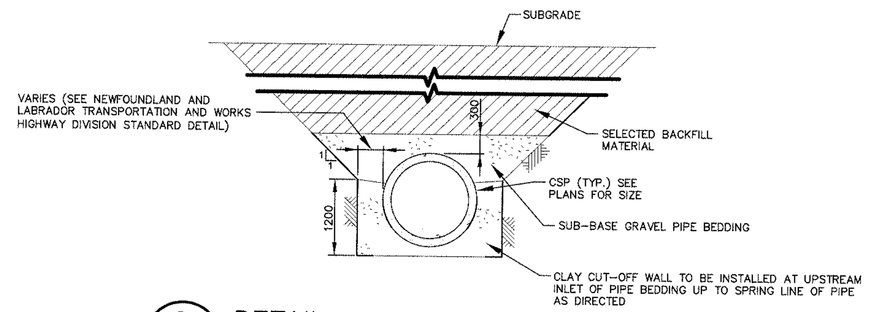

8 — DETAIL— TYPICAL CSP PIPE CULVERT CROSS-SECTION
NTS

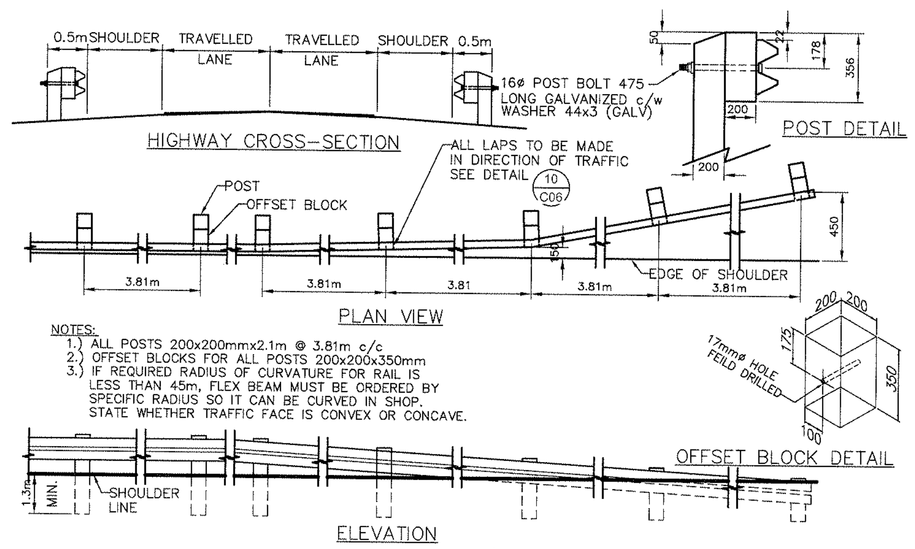

9 — DETAIL— INSTALLATION OF STEEL BEAM GUIDERAIL
N.T.S.

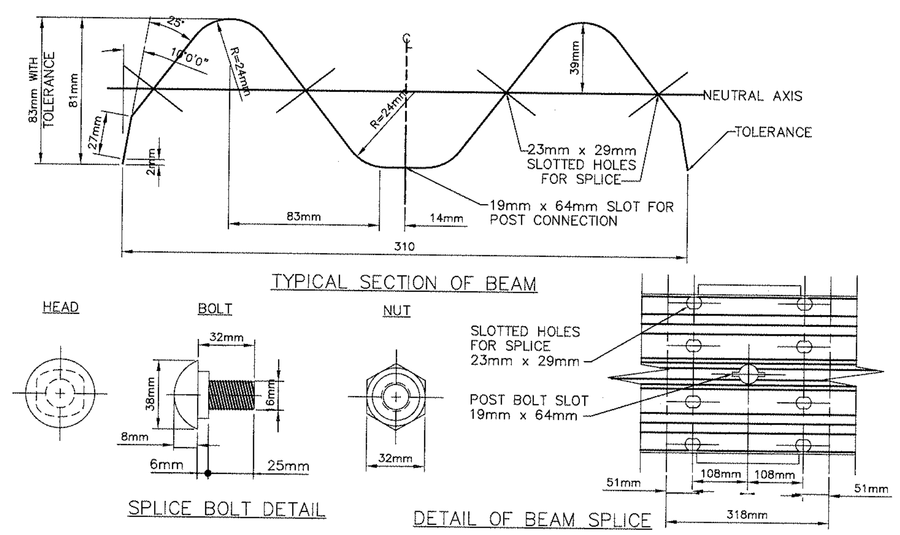

10 — DETAIL— STEEL BEAM GUIDERAIL
N.T.S.

GENERAL NOTES:

1. FOR GENERAL NOTES SEE DRAWING C01

Public Works and Government Services Canada / Travaux Publics et Services gouvernementaux Canada

REGISTERED PROFESSIONAL ENGINEER — PEGNL — MARTIN SEZANSON — SIGNATURE — DATE — NEWFOUNDLAND & LABRADOR

PROVINCE OF NEWFOUNDLAND AND LABRADOR
PEGNL Newfoundland and Labrador — PERMIT HOLDER — This Permit Allows
CBCL LIMITED
To practice Professional Engineering in Newfoundland and Labrador. Permit No. as issued by PEGNL 00178 which is valid for the year 2014.

revisions		date
6	ISSUED FOR TENDER	FEB 10 2014
5	REISSUED FOR APPROVAL	JAN 28 2014
4	ISSUED FOR APPROVAL	JAN 10 2014
3	ISSUED FOR 99% DESIGN	DEC 13 2013
2	ISSUED FOR 66% DESIGN	NOV 08 2013
1	ISSUED FOR REVIEW RS-3	OCT 11 2013

project / projet
HIGHWAY 430 REALIGNMENT
DEEP COVE GROS MORNE NATIONAL PARK, NL

drawing / dessin
TYPICAL SECTIONS MISCELLANEOUS DETAILS

designed / conçu: P.F.
date: AUGUST 2013
drawn / dessiné: J.P.R.
date: AUGUST 2013
approved / approuvé
date: FEBRUARY 2014
Tender / Soumission
PWGSC Project Manager / Administrateur de projets TPSGC
project number / no. du projet: R.062334.001
drawing no. / no. du dessin: C-05

E-DRM/GDD-E: 469979

PWGSC B1 (2004)