0 10 20 30 40 50 60 70 80 90 100 110 120 130 140 150 160 170 180 190 200 millimetres

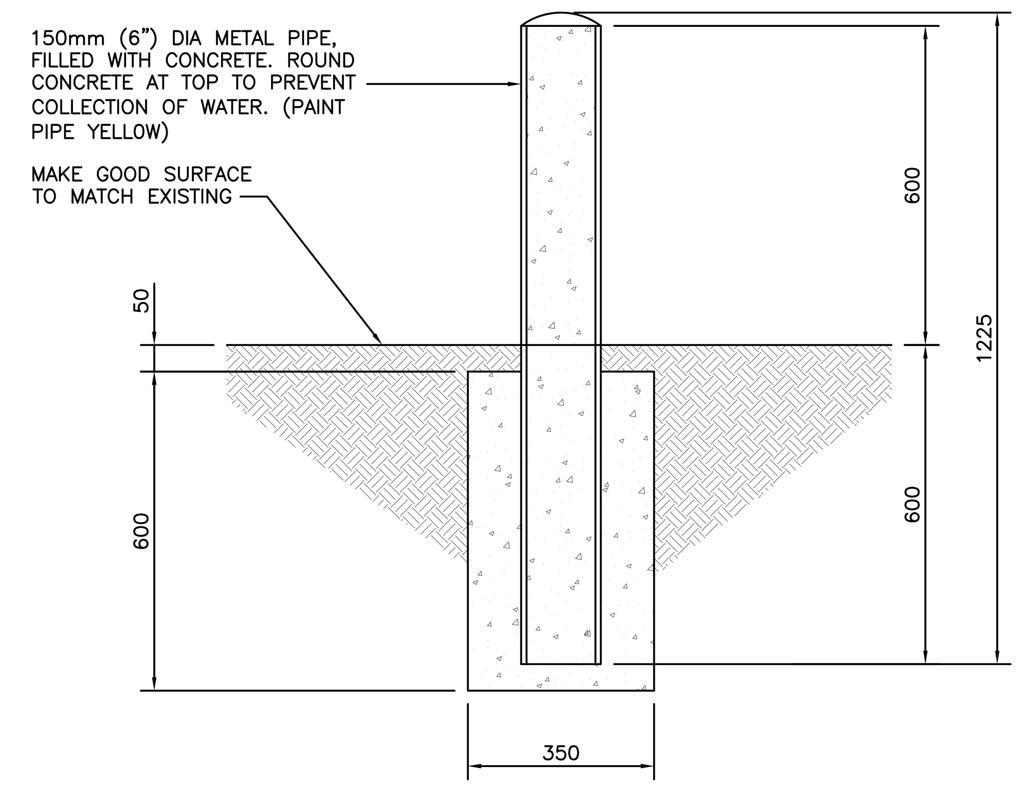

D E-1 E-1 BOLLARD DETAIL
SCALE: NTS

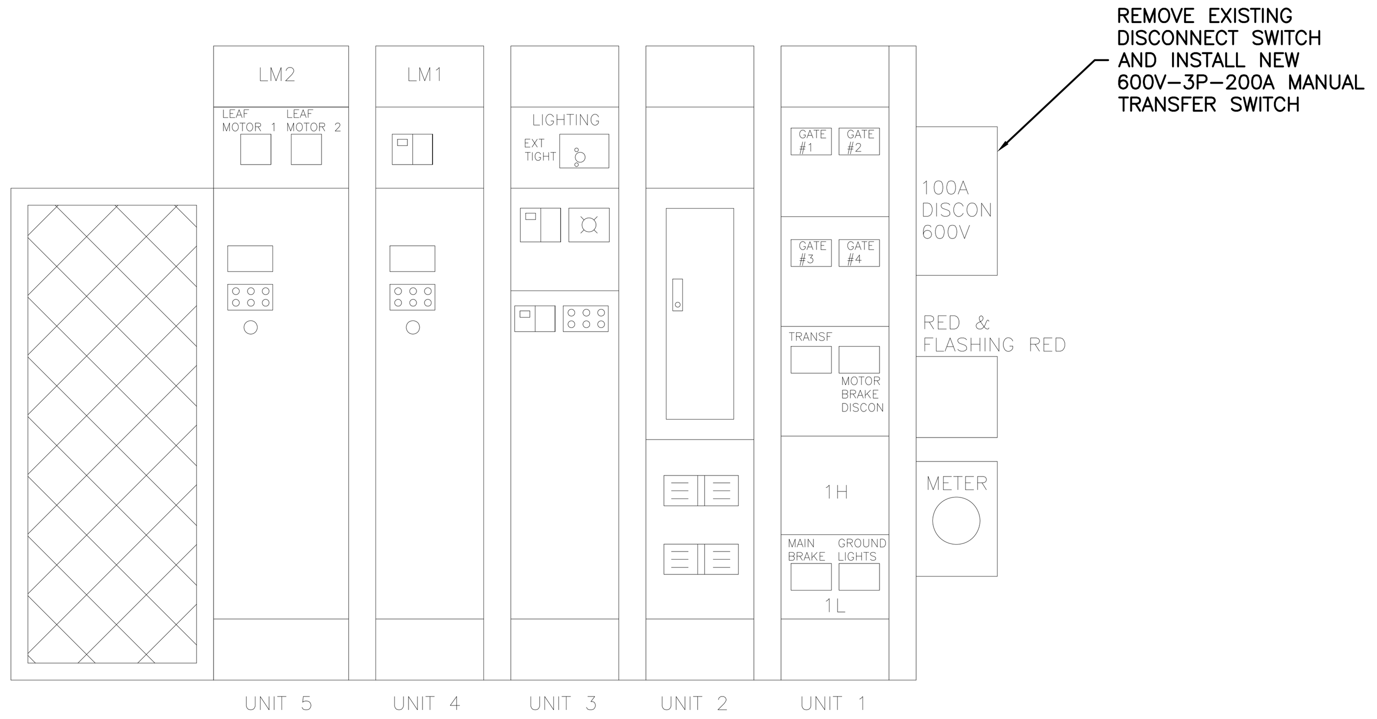

A E-1 E-1 EXISTING MOTOR CONTROL CENTRE
SCALE: NTS

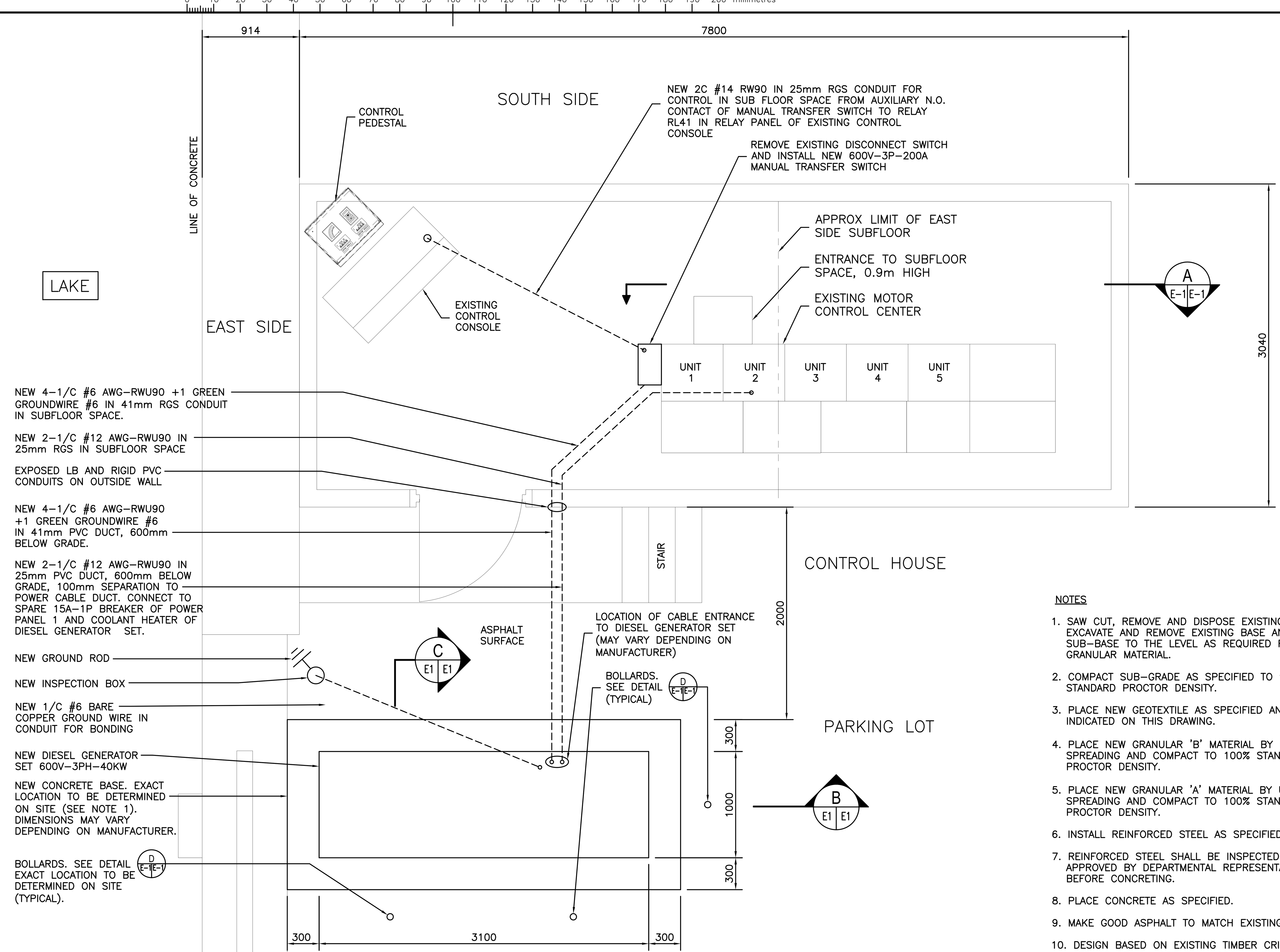

CONTROL HOUSE PLAN
SCALE: 1:25

NOTES

1. SAW CUT, REMOVE AND DISPOSE EXISTING ASPHALT EXCAVATE AND REMOVE EXISTING BASE AND SUB–BASE TO THE LEVEL AS REQUIRED FOR NEW GRANULAR MATERIAL.
2. COMPACT SUB–GRADE AS SPECIFIED TO 98% STANDARD PROCTOR DENSITY.
3. PLACE NEW GEOTEXTILE AS SPECIFIED AND AS INDICATED ON THIS DRAWING.
4. PLACE NEW GRANULAR 'B' MATERIAL BY UNIFORM SPREADING AND COMPACT TO 100% STANDARD PROCTOR DENSITY.
5. PLACE NEW GRANULAR 'A' MATERIAL BY UNIFORM SPREADING AND COMPACT TO 100% STANDARD PROCTOR DENSITY.
6. INSTALL REINFORCED STEEL AS SPECIFIED.
7. REINFORCED STEEL SHALL BE INSPECTED AND APPROVED BY DEPARTMENTAL REPRESENTATIVE BEFORE CONCRETING.
8. PLACE CONCRETE AS SPECIFIED.
9. MAKE GOOD ASPHALT TO MATCH EXISTING.
10. DESIGN BASED ON EXISTING TIMBER CRIB STRUCTURE IS MORE THAN 650mm BELOW EXISTING SURFACE.

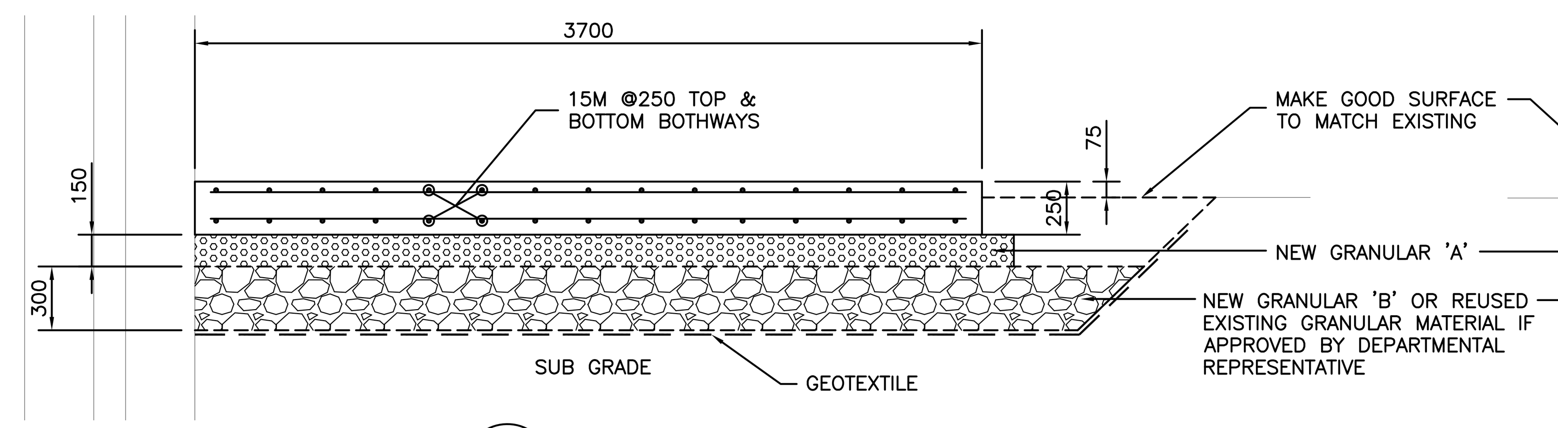

B E-1 E-1 SECTION
SCALE: NTS

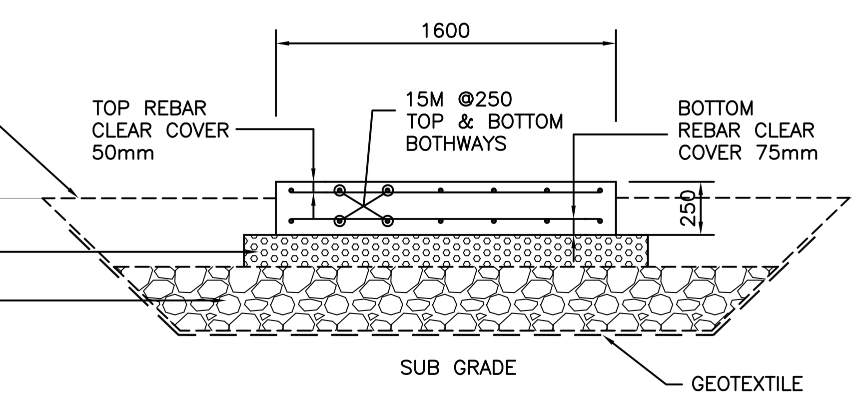

C E-1 E-1 SECTION
SCALE: NTS

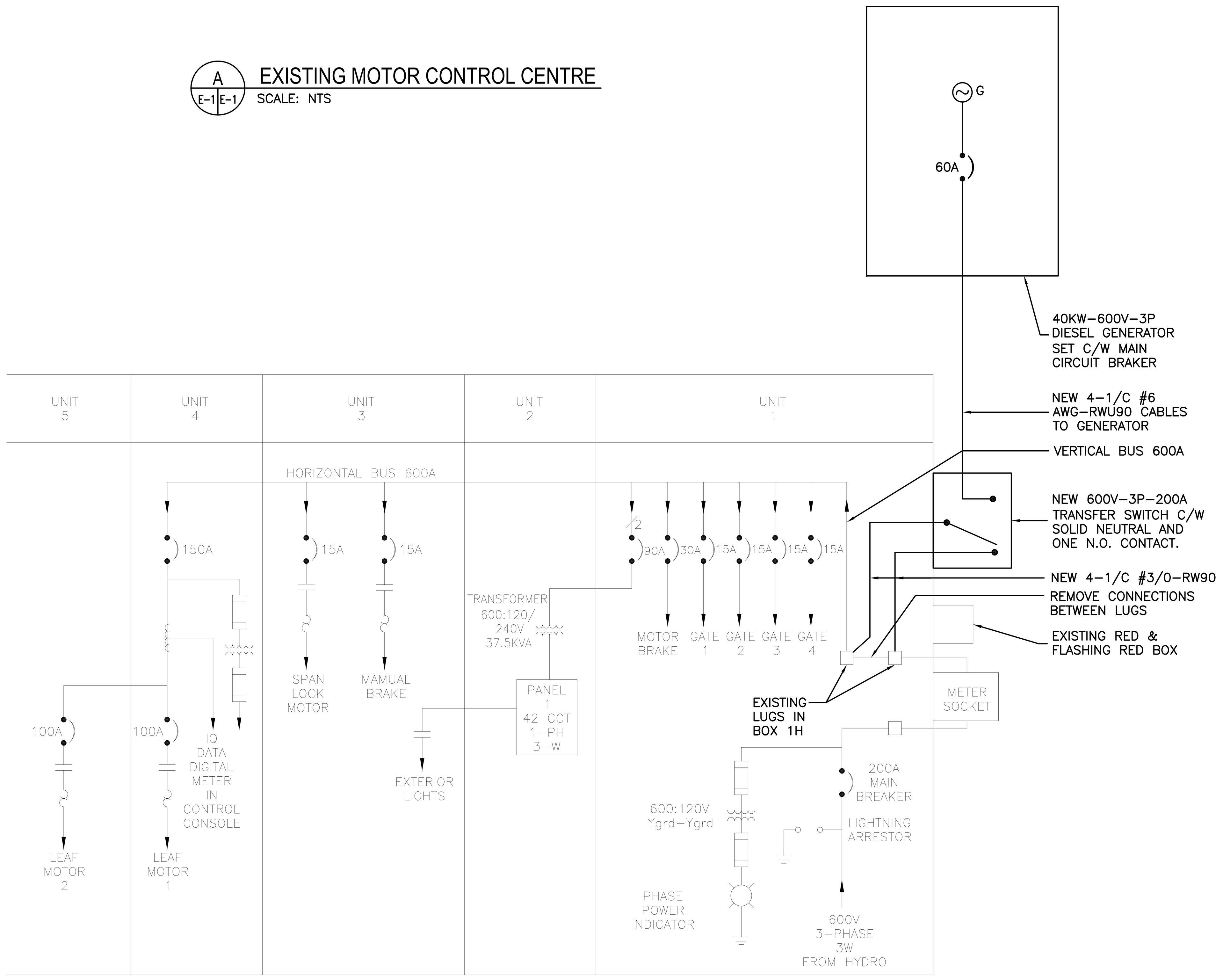

SINGLE LINE DIAGRAM OF EXISTING MOTOR CONTROL CENTRE (MCC) IN CONTROL ROOM
SCALE: NTS

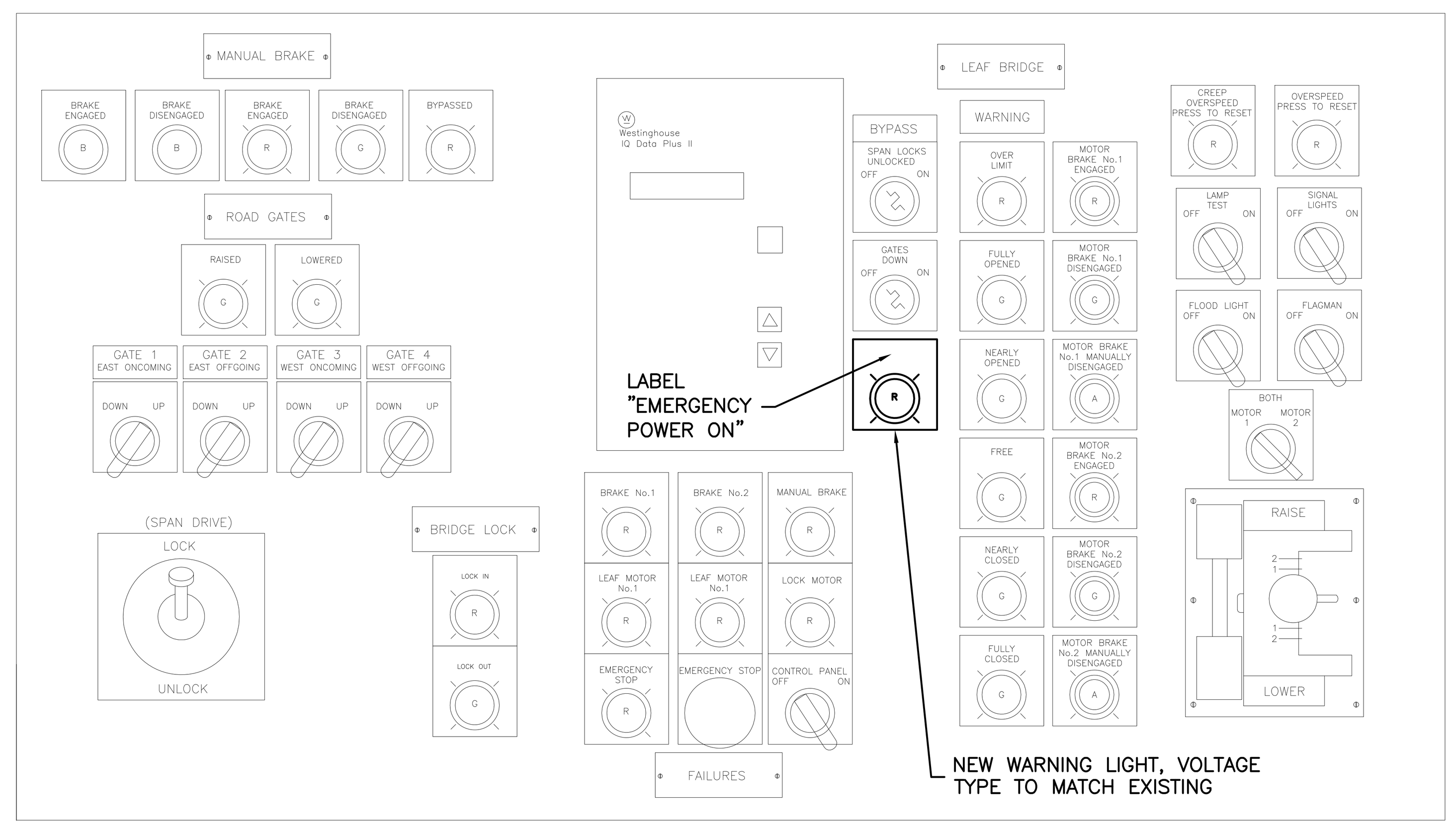

EXISTING CONTROL CONSOLE
SCALE: NTS

Public Works and Government Services Canada
Travaux publics et Services gouvernementaux Canada

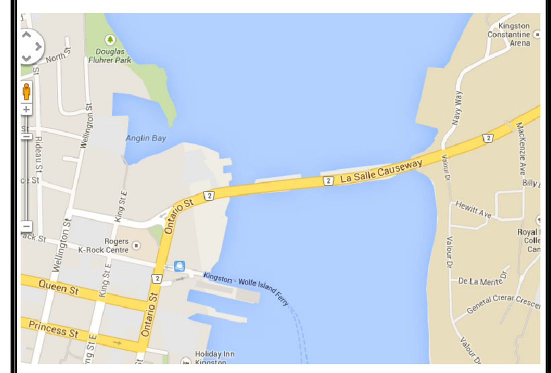

LOCATION PLAN

NOTE:
DARK LINE DENOTES NEW WORK.

revision		date
04		
03		
02		
01		

Do not scale drawings.
Verify all dimensions and conditions on site and immediately notify the Departmental Representative of all discrepancies.

A Detail No. / No. du détail
B drawing no. – where detail required / dessin no. – où détail exigé
C drawing no. – where detailed / dessin no. – où détaillé

project title / titre du projet
KINGSTON Ontario
LASALLE CAUSEWAY BASCULE BRIDGE
EMERGENCY POWER

drawing title / titre du dessin
CONTROL HOUSE PLAN AND SINGLE LINE DIAGRAM

drawn by / dessine par: A. SOBREVILLA
designed by / conc par: TY HUYNH/JACK TO
approved by / approuve par: SID KOCHAR/JACK TO
bid / offre — project manager / administrateur de projets
project date / date du projet: 2014–07–18
project no. / no. du projet: R.013375.034
drawing no. / dessine no.: E–1