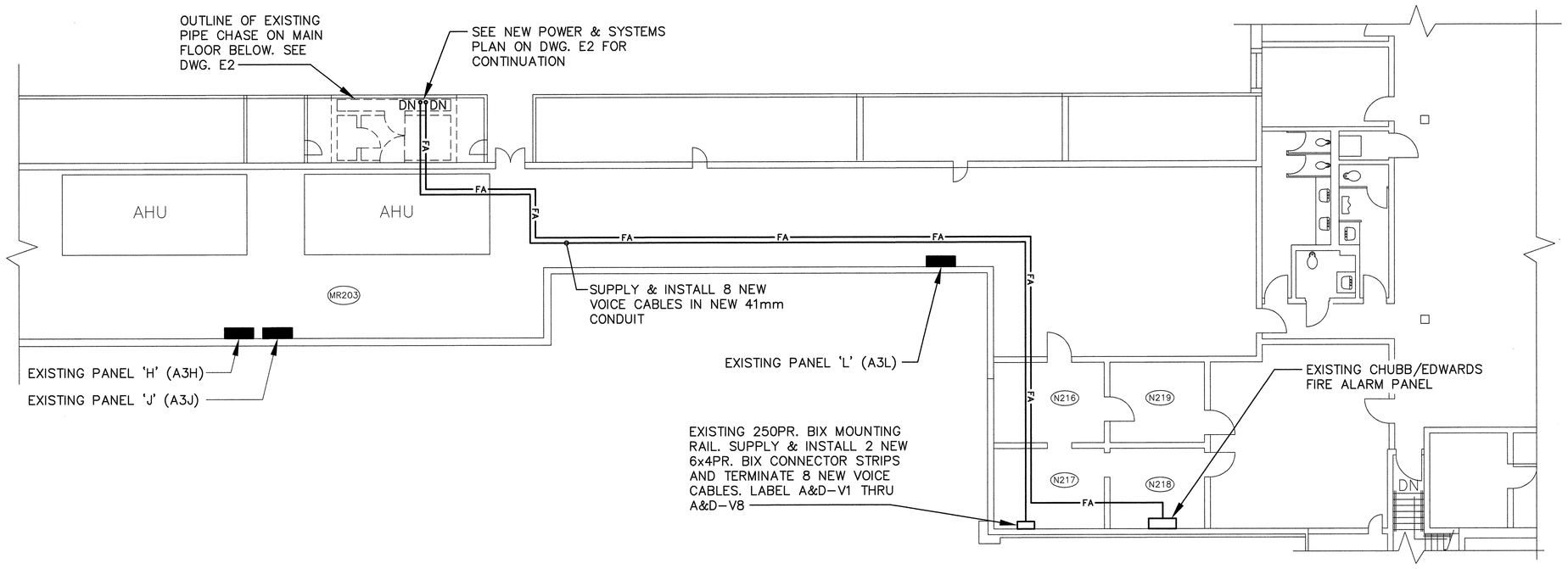

PARTIAL NORTH MECHANICAL ROOM FLOOR PLAN
SCALE 1:100

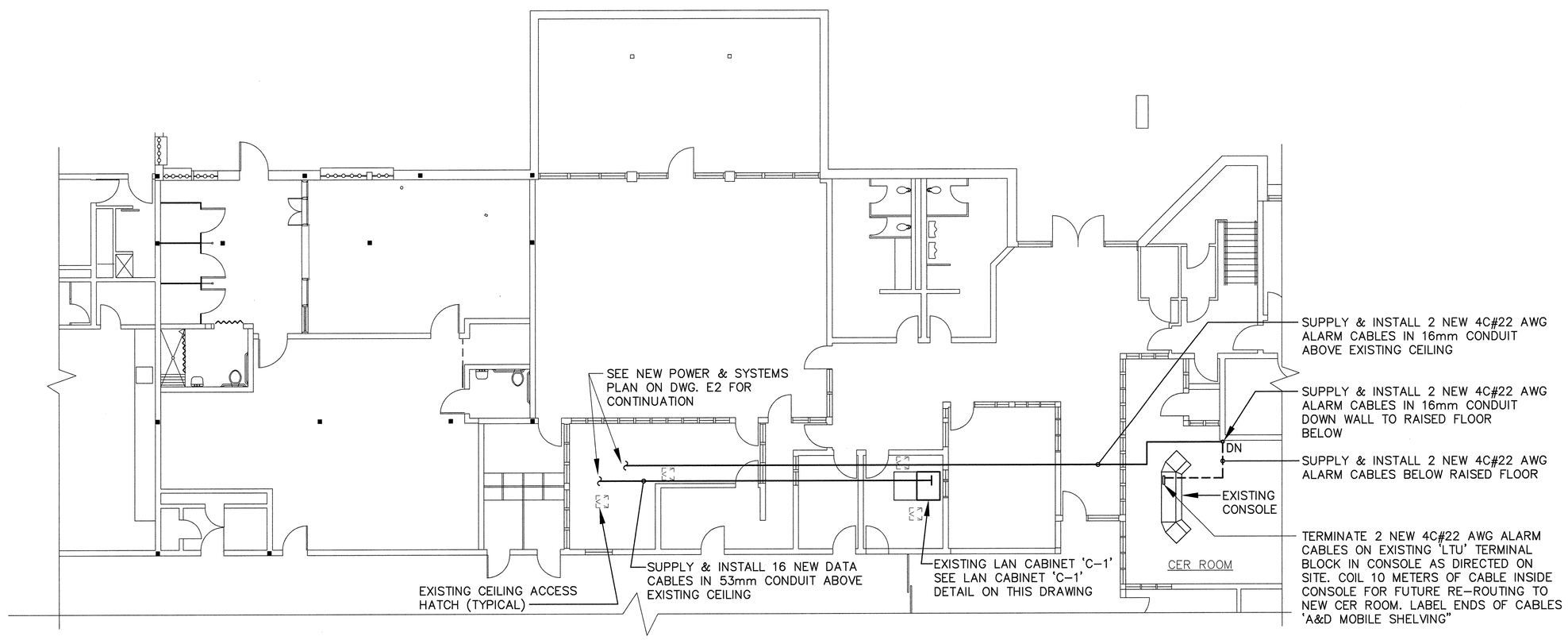

PARTIAL MAIN FLOOR PLAN
SCALE 1:100

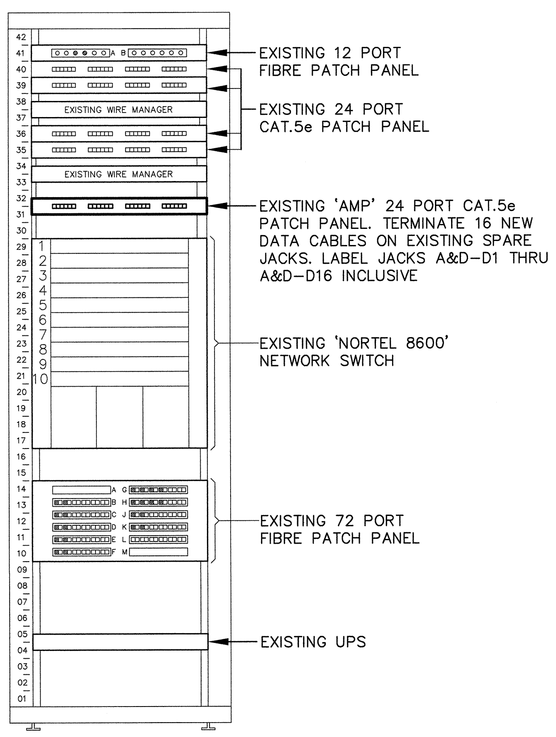

EXISTING LAN CABINET C-1 DETAIL
SCALE N.T.S.

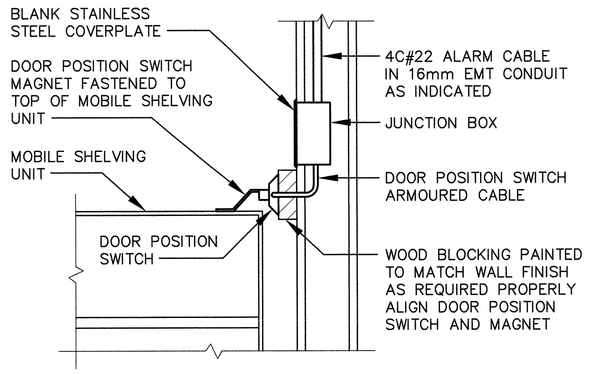

DOOR POSITION SWITCH MOUNTING DETAIL
SCALE N.T.S.

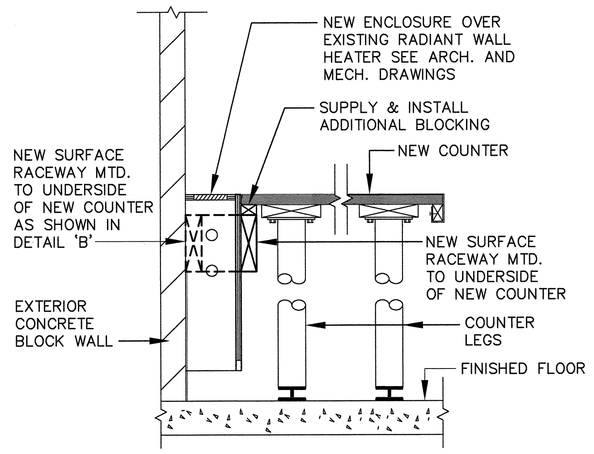

SURFACE RACEWAY MOUNTING DETAIL 'A'
SCALE N.T.S.

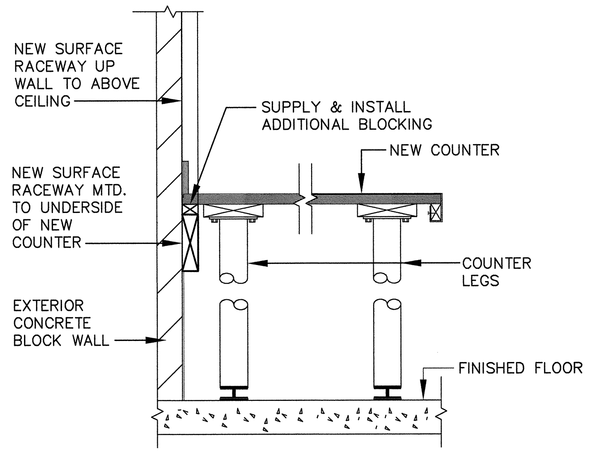

SURFACE RACEWAY MOUNTING DETAIL 'B'
SCALE N.T.S.

Public Works and Government Services Canada / Travaux publics et Services gouvernementaux Canada

REAL PROPERTY SERVICES
Pacific Region
SERVICES IMMOBILIERS
Région de Pacifique

PROFESSIONAL ENGINEER M. DEFICCO #39846 BRITISH COLUMBIA
MAY 01 2014

Revision/ Revision	Description/Description	Date/Date
	ISSUED FOR TENDER	APR. 28/14
0	ISSUED FOR QMS TECHNICAL REVIEW	FEB. 6/14

Client/client
CORRECTIONAL SERVICE OF CANADA

Project title/Titre du projet
AGASSIZ B.C. KENT INSTITUTION A AND D REDEVELOPMENT

Consultant Signature Box Only
N/A

Designed by/Concept par
T. JEREB

Drawn by/Dessine par
T. JEREB

PWGSC Project Manager/Administrateur de Projets TPSGC
DARYL SINCLAIR

PWGSC, Regional Manager, Architectural and Engineering Services/ Gestionnaire régionale, Services d'architectural et de génie, TPSGC
OREST KLUFAS

Drawing title/Titre du dessin
PARTIAL MAIN FLOOR PLAN, PARTIAL NORTH MECHANICAL ROOM PLAN AND DETAILS

Project No./No. du projet	Sheet/Feuille	Revision no./ La Révision no.
R.018361.001	E3 OF 3	0

PWGSC – B1 – 1000X707

0 10 20 30 40 50 60 70 80 90 100mm

DM5XXXXXX