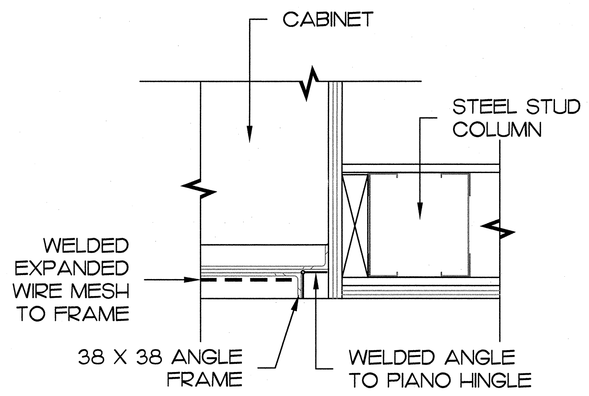

8 / A501 LOCKABLE OVERNIGHT STORAGE DETAIL
SCALE 1 = 5

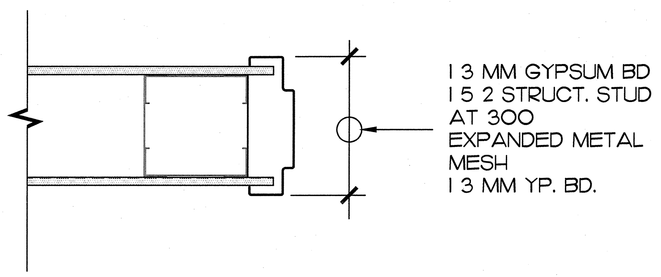

7 / A703 DOOR JAMB DETAIL
SCALE 1 = 5

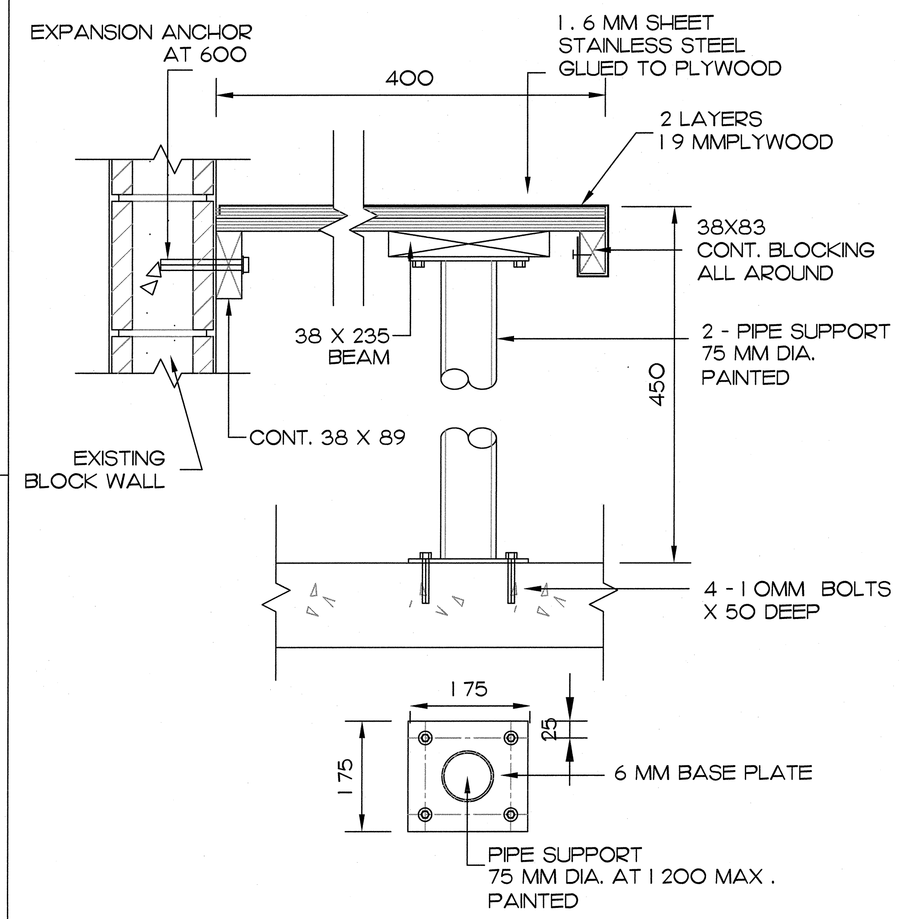

1 / A200 BENCH DETAIL
SCALE 1 = 5

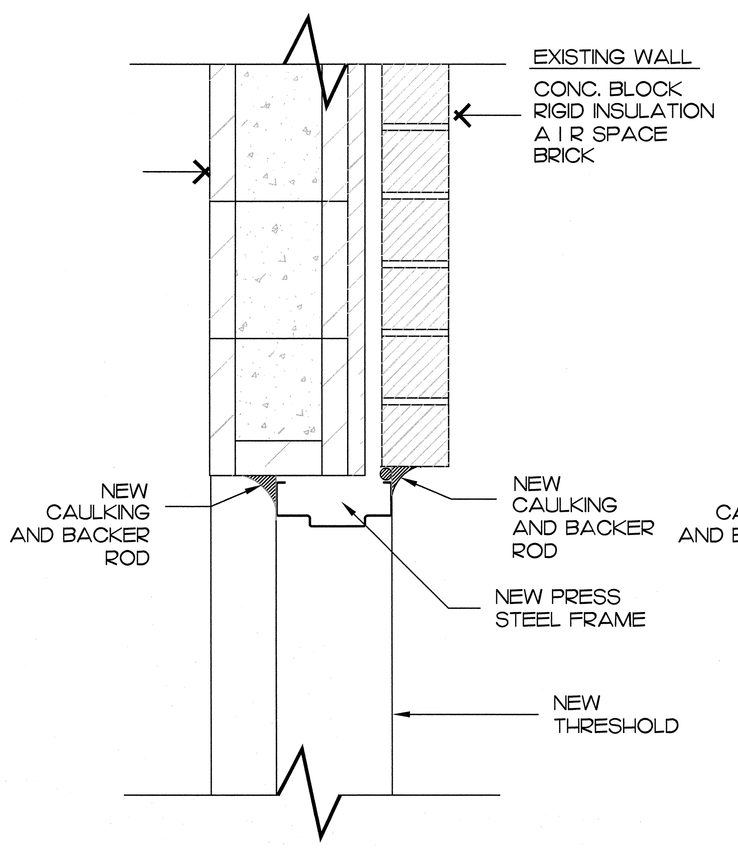

6 / A500 EXTERIOR WALL DOOR JAMB

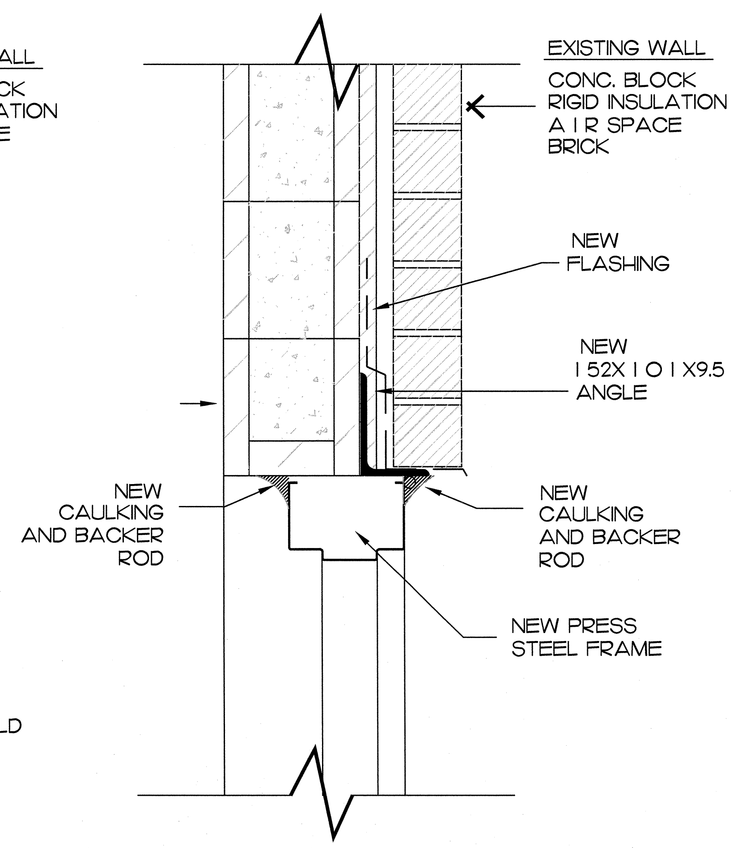

5 / A500 EXTERIOR WALL DOOR HEAD

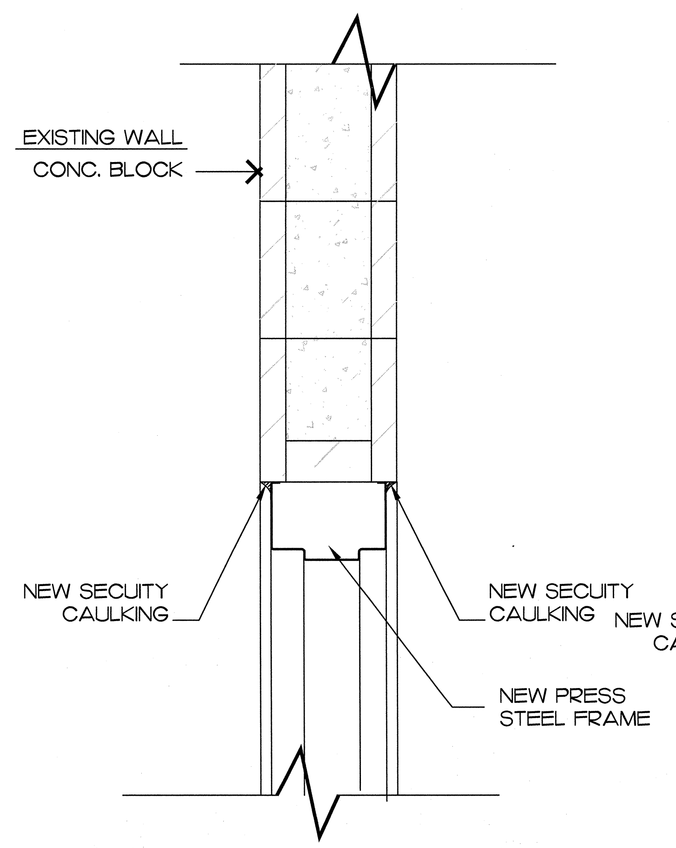

4 / A400 INTERIOR CORRIDOR DOOR HEAD

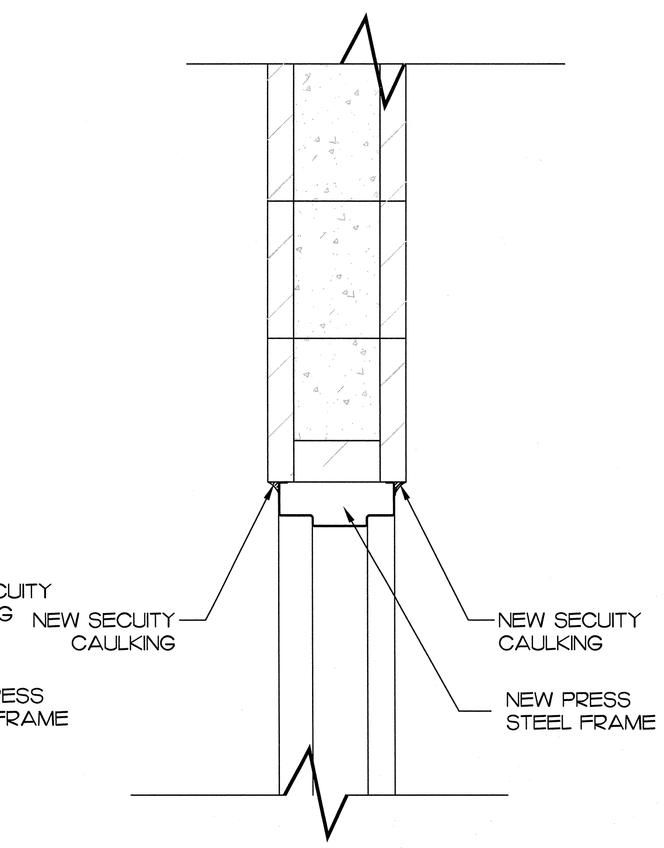

3 / A400 INTERIOR CORRIDOR DOOR JAMB

MAY 17, 2014

PWGSC – B1 – 1000X707

Public Works and Government Services Canada / Travaux publics et Services gouvernementaux Canada

REAL PROPERTY SERVICES
Pacific Region
SERVICES IMMOBILIERS
Région de Pacifique

REGISTERED ARCHITECT JOSEPH K. T. YUEN BRITISH COLUMBIA
MAY 23, 2014

Revision/Revision	Description/Description	Date/Date
	APR 11 14, 2014 - TENDER SET	REVISED
	APR 11 14, 2014 - TENDER SET	
	MARCH 1, 2014 - PRETENDER SET	
	DECEMBER 1, 2013 - 100 % DWG	
	DECEMBER 1, 2013 - 90 % DWG	
	SEPTEMBER 3, 2013	
	AUGUST 24, 2013	
	AUGUST 12, 2013	

Client/client
CORRECTIONAL SERVICE OF CANADA

Project title/Titre du projet
AGASSIZ B.C.
KENT INSTITUTION
A AND D
REDEVELOPMENT

Consultant Signature Box Only

Designed by/Concept par
JOSEPH YUEN
J. Yuen May 26, 2014

Drawn by/Dessiné par
JOSEPH YUEN

PWGSC Project Manager/Administrateur de Projets TPSGC
DARYL SINCLAIR

PWGSC, Regional Manager, Architectural and Engineering Services/ Gestionnaire régionale, Services d'architectural et de génie, TPSGC
GREST KLUFAS

Drawing title/Titre du dessin
DOOR JAMB AND HEAD DETAILS
SCALE 1 = 5

Project No./No. du projet	Sheet/Feuille	Revision no./ La Révision no.
R.018361.001	A 703	

DM5XXXXXX
DM3XXXXX