FAN SCHEDULE

UNIT #	SERVICE	MAKE	MODEL	AIR FLOW L/S (CFM)	STATIC PRESSURE Pa ("W.C.)	ELECTRICAL (V/PH/HZ)	BLOWER MOTOR (W)	SOUND POWER	EQUALS	NOTE
EF-1	KITCHEN THIRD FL WEST			141 (300)	88 (0.35")	120/1/60	139	2.0 SONES	-	3,7,8,10,11,12,13,14
EF-2	SMALL BOARDROOM 309			141 (300)	63 (0.25")	120/1/60	108	1.8 SONES	-	3,7,10,12,13,14
EF-3	BUSINESS CENTRE 345			141 (300)	63 (0.25")	120/1/60	108	1.8 SONES	-	3,7,8,10,11,12,13,14
EF-4	LAN STORAGE RM 341			47 (100)	63 (0.25")	120/1/60	75	0.8 SONES	-	3,7,10,12,13,14

NOTES:
1. SUPPLIED BY OWNER, INSTALLED BY CONTRACTOR
2. VSD
3. DISCONNECT
4. BIRDSCREEN
5. BELT GUARD
6. PREFAB CURB
7. VIBRATION ISOLATOR
8. BACKDRAFT DAMPER
9. SOLID STATE VARIABLE SPEED CONTROLLER
10. FLEXIBLE CONNECTIONS
11. C/W 24V CONTROL PACKAGE, CONNECTED TO EXISTING DDC SYSTEM.
12. REFER TO MECHANICAL SPECIFICATION SECTION 233400 FOR ADDITIONAL INFORMATION.
13. W/ WALL MANUAL CONTROL SWITCH.
14. GREENHECK, COOK, AND TWIN CITY.

EXISTING MOTORIZED DAMPER SCHEDULE

UNIT NO.	SERVICE	MAKE	MODEL	AIR FLOW RATE L/S	MAX. P.D. (PSI)	MIN. P.D. (PSI)	NOTES
EMD-11	EAHU-01-Z01 L3 CWN			SEE MECH. DRAWINGS	-	-	CONTROLLED BY T-STAT ZONE 01 @ L3
EMD-13	EAHU-01-Z02 B L3 WN			SEE MECH. DRAWINGS	-	-	EXISTING, CONTROLLED BY T-STAT ZONE 02B @ L3
EMD-14	EAHU-01-Z303 L3 WN			SEE MECH. DRAWINGS	-	-	EXISTING, CONTROLLED BY T-STAT ZONE 303 @ L3
EMD-15	EAHU-01-Z303B L3 SWS			SEE MECH. DRAWINGS	-	-	EXISTING, CONTROLLED BY T-STAT ZONE 303B @ L3
EMD-16	EAHU-01-Z04A L3 WS			SEE MECH. DRAWINGS	-	-	EXISTING, CONTROLLED BY T-STAT ZONE 04A @ L3
EMD-18	EAHU-01-Z04C L3 CWS			SEE MECH. DRAWINGS	-	-	CONTROLLED BY T-STAT ZONE 04C @ L3

2M- MOTORIZED DAMPER

GENERAL NOTES:
1. CONTRACTOR TO PROVIDE THE NEW MOTORIZED DAMPERS AND C/W ACTUATOR AND CONTROL WIRING (COMPATIBLE TO EXISTING DDC CONTROL SYSTEM) TO THE EXISTING DDC CONTROL PANEL, SEE MECHANICAL SPECS. FOR DETAIL.

VARIABLE AIR VOLUME (VAV) BOXES SCHEDULE

UNIT NO.	SERVICE	AIRFLOW (L/S) MIN.	AIRFLOW (L/S) MAX.	INLET SIZE (MM)	OUTLET SIZE (MM)	TOTAL PRESSURE DROP Pa	MAXIMUM OUTLET NOISE (NC)	OPERATOR TYPE	ELECTRIC DUCT HEATER	HEATING CAPACITY (KW)	ELECTRICAL (V/PH/HZ)	NOTES
VAV-1	QUITE RM 356	47	71	175	300	--	--	DIGITAL	EDH-1	1	208/3/60	1,2,3,4,5
VAV-2	OFFICE 321	71	94	200	500	--	--	DIGITAL	EDH-2	1	208/3/60	1,2,3,4,5
VAV-3	OFFICE 309	110	157	175	300	--	--	DIGITAL	EDH-3	2.0	208/3/60	1,2,3,4,5
VAV-4	OFFICE 323	47	71	175	300	--	--	DIGITAL	EDH-4	1	208/3/60	1,2,3,4,5
VAV-5	OFFICE 340	47	71	175	300	--	--	DIGITAL	EDH-5	1	208/3/60	1,2,3,4,5
VAV-6	OFFICE 308	69	99	175	300	--	--	DIGITAL	EDH-6	1.5	208/3/60	1,2,3,4,5
VAV-7	OFFICE 355	47	71	175	300	--	--	DIGITAL	EDH-7	1	208/3/60	1,2,3,4,5
VAV-8	OFFICE 310	139	199	175	300	--	--	DIGITAL	EDH-8	2.5	208/3/60	1,2,3,4,5

NOTES:
1. C/W THERMOSTAT.
2. W/ DDC CONTROL AND COMMUNICATE WITH EXISTING DDC CONTROL SYSTEM.
3. W/ ELECTRIC DUCT HEATER.
4. W/ ATTENUATION SECTION.
5. REFER TO MECHANICAL SPEC. FOR DETAIL REQUIREMENTS.

DIFFUSER, GRILLE & REGISTER SCHEDULE

UNIT NO.	TYPE	MANUFACTURER	MODEL	OVERALL DIMENSION	EQUALS	NOTES
S-1	SQUARE CONE DIFFUSER			600x600mm	SEE SPECIFICATION	3
S-2	DOUBLE DEFLECTION SUPPLY			SEE DRAWINGS	SEE SPECIFICATION	3
R-1	EGG CRATE RETURN			SEE DRAWINGS	SEE SPECIFICATION	3
R-2	LOUVERED RETURN			SEE DRAWINGS	SEE SPECIFICATION	3
E-1	EGG CRATE RETURN			SEE DRAWINGS	SEE SPECIFICATION	3
E-2	LOUVERED RETURN			SEE DRAWINGS	SEE SPECIFICATION	3
L-1	EXTERIOR INTAKE			SEE DRAWINGS	SEE SPECIFICATION	2, 3
DG-1	DOOR GRILLE			SEE DRAWINGS	SEE SPECIFICATION	3

NOTES:
1. PROVIDE DIFFUSERS AND GRILLES WITH BORDER STYLES THAT ARE COMPATIBLE WITH ADJACENT WALLS, CEILINGS OR DOOR SYSTEMS. CONFIRM ON SITE BEFORE ORDERING.
2. INSTALLATION OF BIRD AND INSECT SCREEN.
3. CONFIRM FINISH/COLOR WITH ARCHITECT.
4. CEILING MOUNT.

AC UNIT SCHEDULE

UNIT NO.	RELATED SYSTEM	SERVICE	MAKE	MODEL	COOLING CAP kW (TON)	HEATING CAP kW (MBH)	AIR FLOW L/S (CFM)	POWER V/Ph/Hz	FLA	NOTES
AC-1	CU-1	LAN RM L3			7.0 (2.0)	N/A	470 (1000)	208/1/60	34.2	1,2,3,4,5,6,7
AC-2	CU-2	SSB MEDIA 354			7.0 (2.0)	N/A	347 (738)	208/1/60	MA=1.0	2,3,4

NOTES:
1. PROVIDE AC UNIT SPECIFIED FOR COMPUTER ROOM. REFER TO MECHANICAL SPEC. FOR DETAIL REQUIREMENTS.
2. REFRIGERANT TYPE TO BE R-407C.
3. WITH 30ø CONDENSATE DRAIN, AND CONDENSATE DRAIN IN-LINE BOOST PUMP.
4. WITH T-STAT CONTROL.
5. PROVIDE CONTROL SYSTEM WHICH TO BE MONITORED AND COMMUNICATED WITH EXISTING DDC CONTROL SYSTEM.
6. PROVIDE FILTER BOX AND DISCHARGE AIR DUCT FLANGE FOR S/A DUCT CONNECTION.
7. WITH HUMIDIFIER AND ELECTRIC REHEAT COIL.

CONDENSING UNIT SCHEDULE

UNIT NO.	RELATED SYSTEM	SERVICE	MAKE	MODEL	COOLING CAP kW (TON)	HEATING CAP kW (MBH)	AIR FLOW L/S (CFM)	POWER V/Ph/Hz	FLA	NOTES
CU-1	AC-1	ROOF			7.0 (2.0)	N/A	1034 (2200)	208/1/60	13.4	1,2,3,4,5
CU-2	AC-2	ROOF			7.0 (2.0)	N/A	N/A	208/1/60	MA=17.1	2,3,5

NOTES:
1. PROVIDE AC UNIT SPECIFIED FOR COMPUTER ROOM. REFER TO MECHANICAL SPEC. FOR DETAIL REQUIREMENTS.
2. REFRIGERANT TYPE TO BE R-407C.
3. WITH T-STAT CONTROL.
4. PROVIDE CONTROL SYSTEM TO COMMUNICATE WITH EXISTING DDC CONTROL SYSTEM.
5. WITH REFRIGERANT LINE @ MIN. EQUIVALENT LENGTH 50m.

PLUMBING FIXTURE ROUGH IN

ITEM	PLUMBING FIXTURE	DHW MM(IN)	DCW MM(IN)	SAN MM(IN)	VENT MM(IN)
1.	KITCHEN SINK	12 (½)	12 (½)	40(1 1/2)	40(1 1/2)

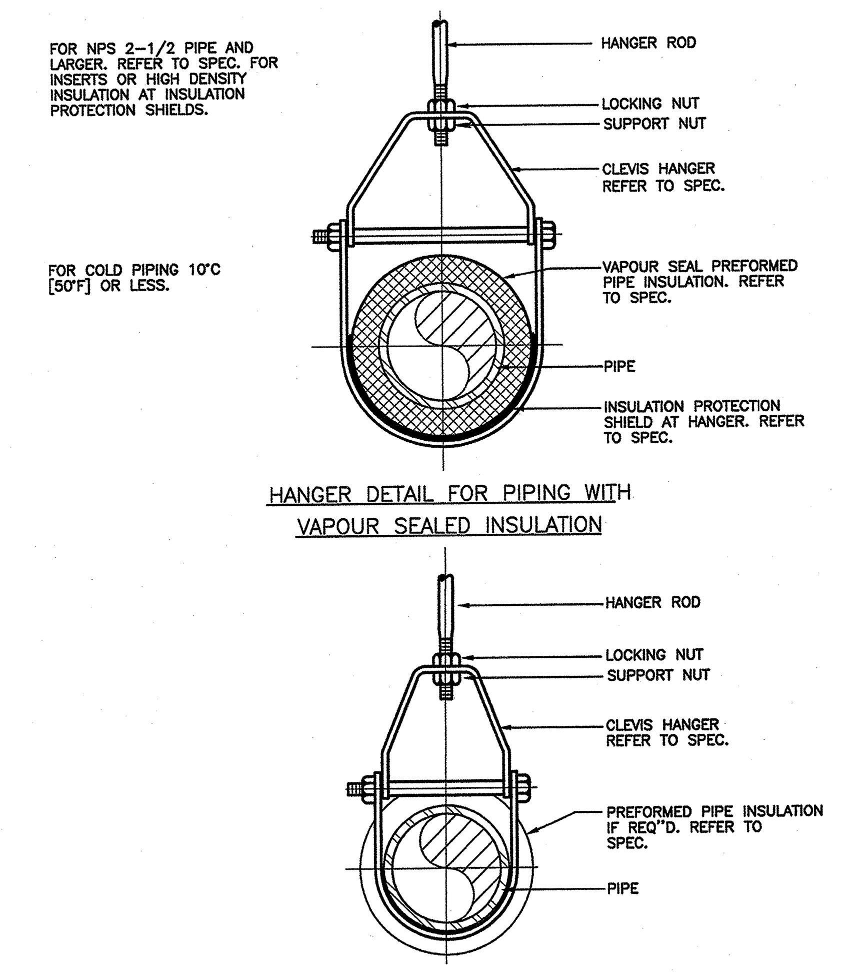

1 / M201 — HANGER DETAIL FOR INSULATED HOT PIPING UP TO NPS 3 (75mm) OR ALL SIZES OF BARE PIPE

SCALE: N.T.S.

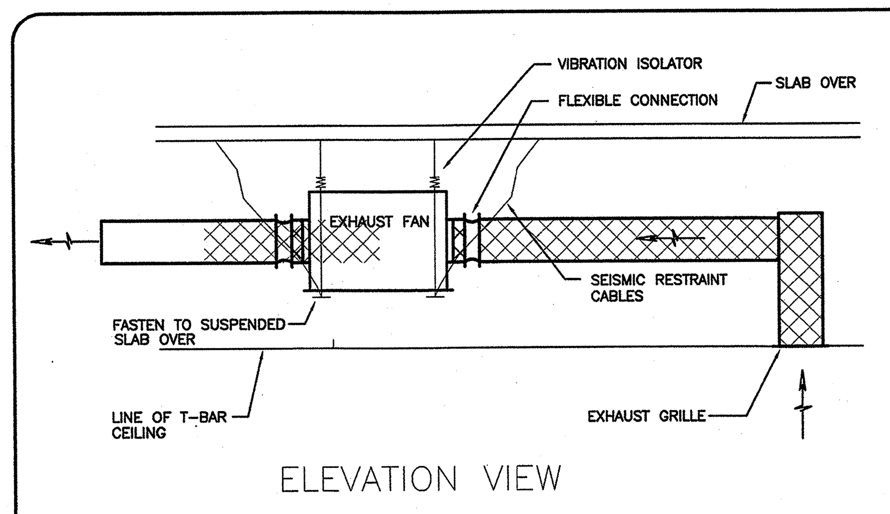

3 / M201 — CEILING EXHAUST FAN INSTALLATION DETAIL

SCALE: N.T.S.

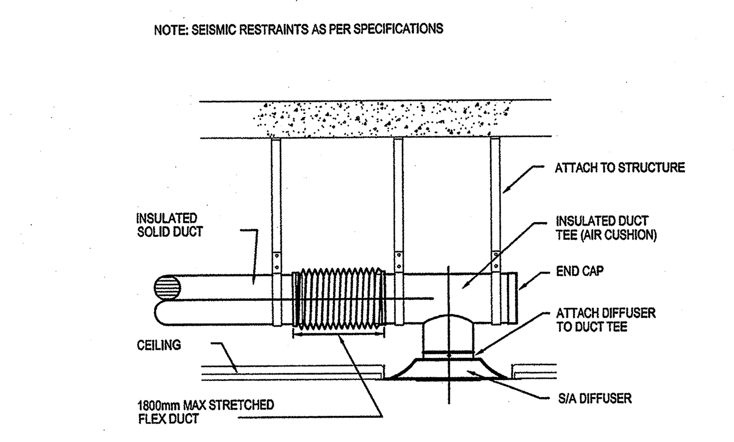

4 / M201 — SUPPLY AIR DIFFUSER

SCALE: N.T.S.

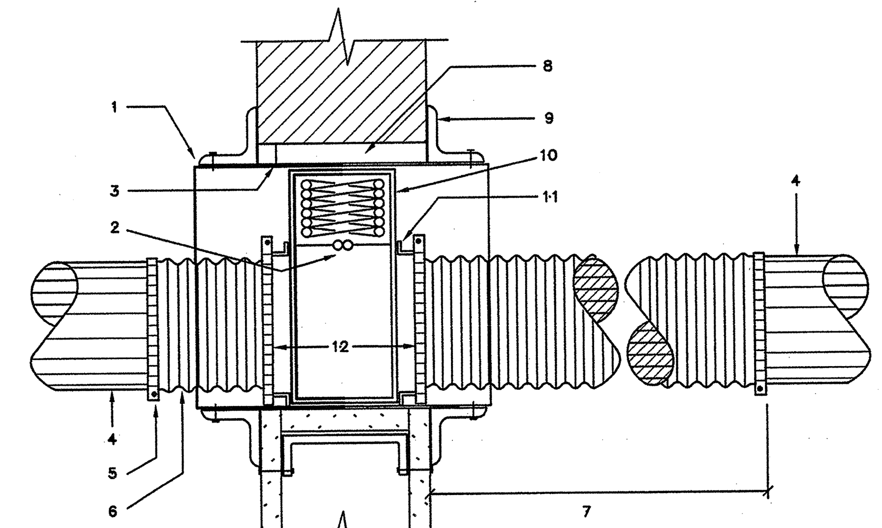

NOTES: #
1. GALVANIZED STEEL SLEEVE.
2. FUSIBLE LINK.
3. 12.5mm [1/2"] MAXIMUM CLEARANCE.
4. DUCT.
5. CLAMP CONNECTION ON FLEX.
6. FLEXIBLE CONNECTION.
7. FLEXIBLE DUCT LENGTH - 3 X DIAMETER.
8. OPENING SIZE. SEE STANDARD SMACNA B.C. DETAIL.
9. STEEL RETAINING ANGLES. SEE STANDARD SMACNA B.C. DETAIL.
10. APPROVED TYPE FIRE DAMPER.
11. TO BE AIR TIGHT.
12. BREAK-AWAY JOINTS.

2 / M201 — ACCESS TO FIRE DAMPER (ROUND DUCT TO 300mm [12"] ONLY)

SCALE: N.T.S.

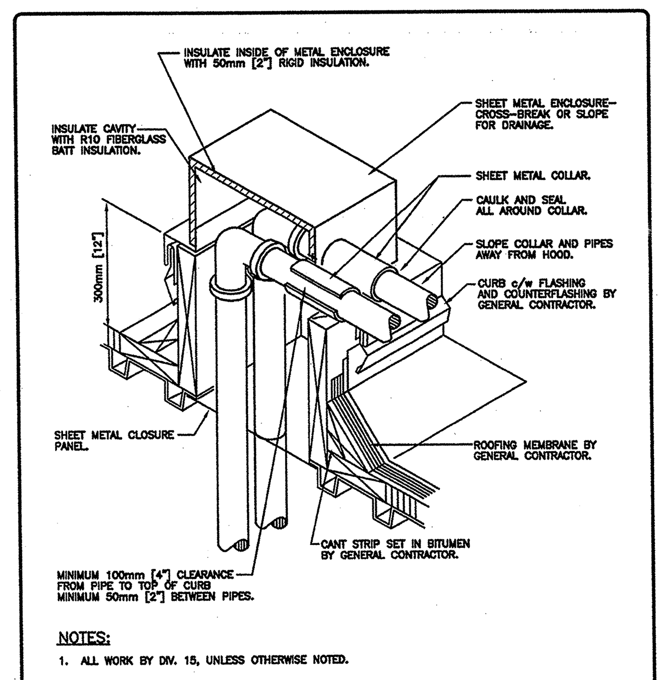

NOTES:
1. ALL WORK BY DIV. 15, UNLESS OTHERWISE NOTED.

5 / M201 — PIPING THROUGH ROOF

SCALE: N.T.S.

NORTH

Public Works and Government Services Canada / Travaux publics et Services gouvernementaux Canada
REAL PROPERTY SERVICES
Pacific Region
SERVICES IMMOBILIERS
Région de Pacifique

Stantec
1100 - 111 Dunsmuir Street
Vancouver BC Canada
V6B 6A3
www.stantec.com
Tel. 604.696.8000
Fax. 604.696.8100

Copyright Reserved
The Copyright to this drawing and its contents is reserved, and remains at all times the exclusive property of Stantec, and shall not be used, modified, or reproduced without the expressed written consent of Stantec.

Dimensions
The Contractor shall verify all dimensions, and immediately report any errors and/or omissions to Stantec. DO NOT SCALE DRAWINGS.

Consultants:

PROFESSIONAL ENGINEER — PROVINCE OF BRITISH COLUMBIA — ZHENG

JUL 1 5 2014

Revision/Revision	Description/Description	Date/Date
4	REVISED & REISSUED FOR TENDER	07/15/14
3	ISSUED FOR PERMIT	06/27/14
2	ISSUED FOR TENDER	06/17/14
1	ISSUED FOR 99% REVIEW	05/23/14

Client/client
PUBLIC WORKS AND GOVERNMENT SERVICES CANADA

Project title/Titre du projet
HARRY STEVENS BUILDING
PHASE 3
3rd FLOOR WEST TI

125 EAST 10TH AVENUE
VANCOUVER, BC

Consultant Signature Only
-

Designed by/Concept par
KZ

Drawn by/Dessine par
KZ

PWGSC Project Manager/Administrateur de Projets TPSGC
Tom Dunphy

Regional Manager, Architectural and Engineering Services
Gestionnaire régionale, Services d'architectural et de génie, TPSGC
Preetipal Paul

Drawing title/Titre du dessin
MECHANICAL EQUIPMENT SCHEDULE & DETAILS

Project No./No. du projet: R.052411.001
Sheet/Feuille: M201-TI OF
Revision no./La Révision no.:

2014/Jul/14, 10:50am kzheng M201 V:\1443\active\144312034\06_dwg\6-04_cd\03_mechanical\drawing\plot_drawing\West wing 3rd floor\revised 144312034-M201-june 11-2014.dwg

PWGSC-B1-1000x707

0 10 20 30 40 50 60 70 80 90 100mm