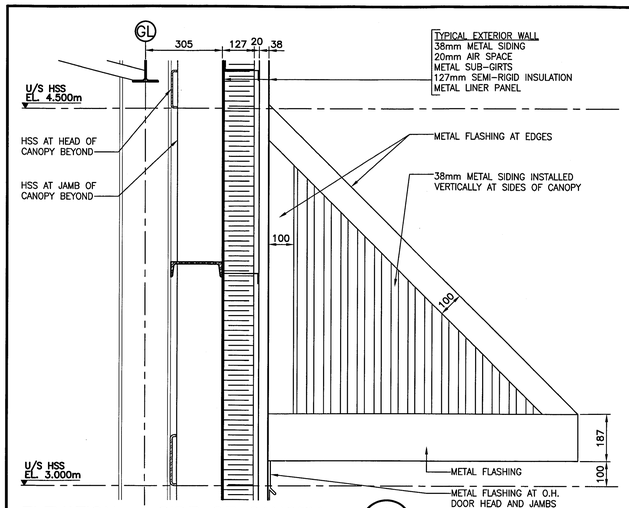

ELEVATION – SIDE OF CANOPY (A / A3 A11)

SCALE : 1:10

0mm 100 200 300 400 500 600 700 800 900 1000mm

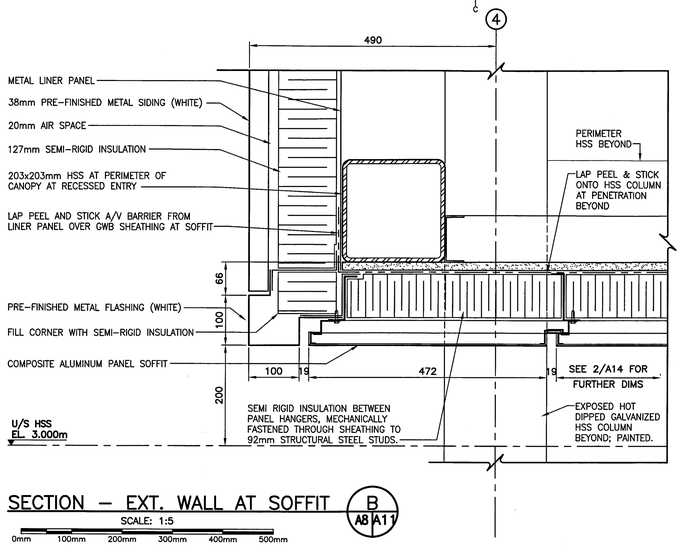

SECTION – EXT. WALL AT SOFFIT (B / A8 A11)

SCALE: 1:5

0mm 100mm 200mm 300mm 400mm 500mm

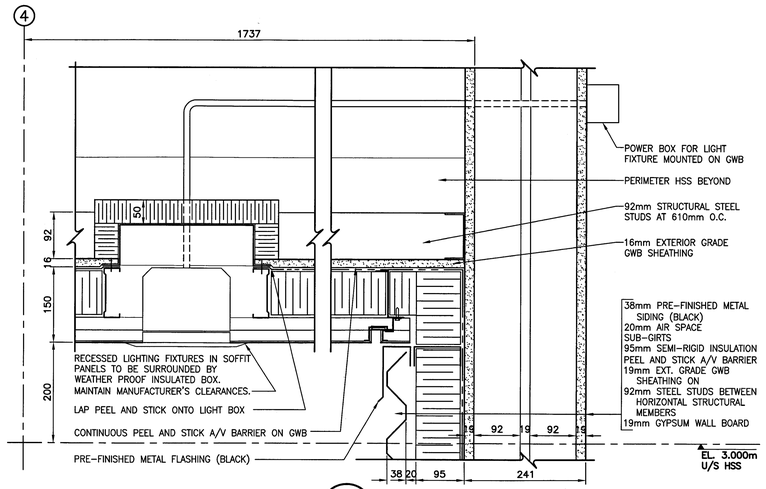

SECTION – SOFFIT AT ENTRY (C / A8 A11)

SCALE: 1:5

0mm 100mm 200mm 300mm 400mm 500mm

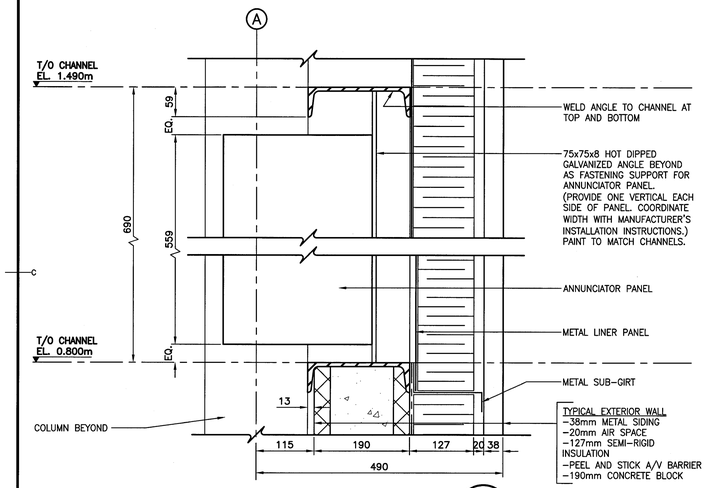

SECTION – ANNUNCIATOR PANEL MOUNT (D / A8 A11)

SCALE: 1:5

0mm 100mm 200mm 300mm 400mm 500mm

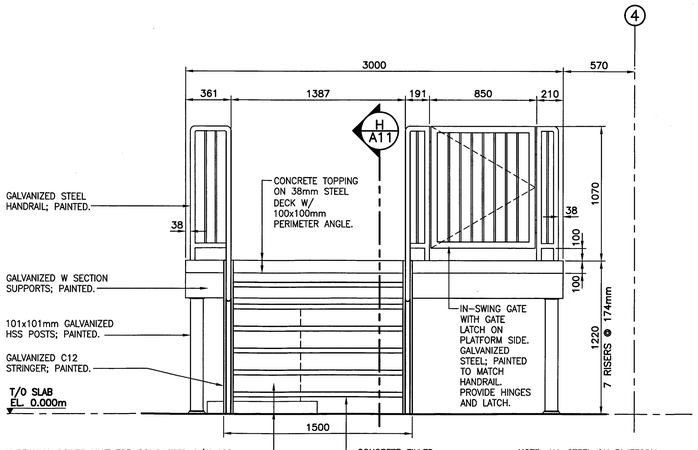

ELEVATION – PLATFORM AND STAIR (G / A1 A11)

SCALE : 1:20

0mm 500mm 1000mm 1500mm 2000mm 2500mm

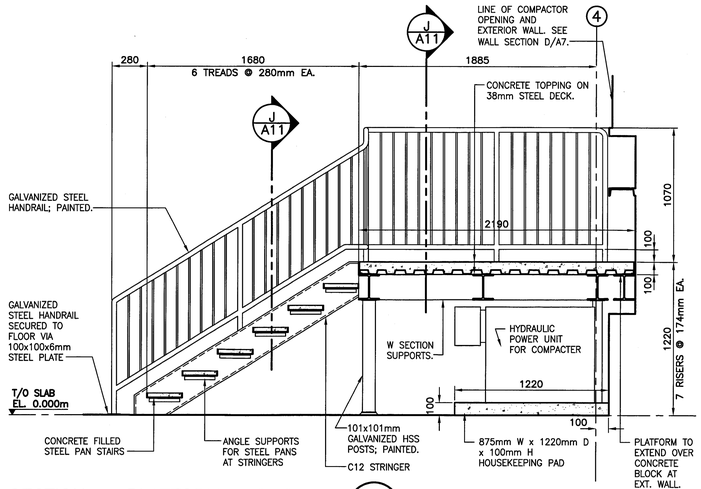

SECTION – PLATFORM AND STAIR (H / A7 A11)

SCALE : 1:20

0mm 500mm 1000mm 1500mm 2000mm 2500mm

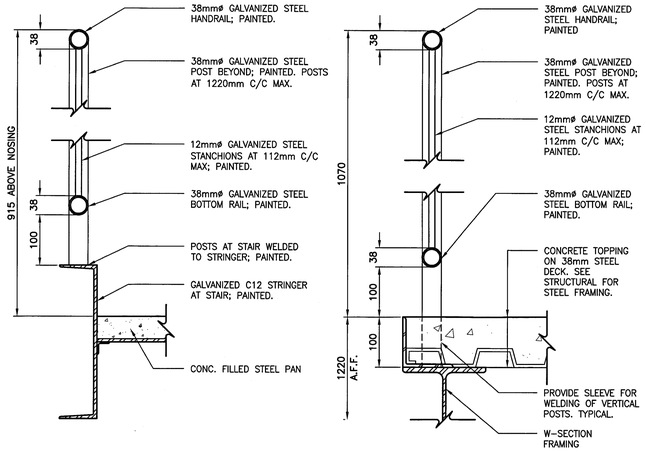

SECTION – HAND RAIL AT PLATFORM (J / A7 A11)

SCALE: 1:5

0mm 100mm 200mm 300mm 400mm 500mm

PWGSC B1 (2004)

0 10 20mm 40 60 80 100 120 140 160 180 200mm

E-DRM/GDD-E: 433049

Public Works and Government Services Canada / Travaux Publics et Services gouvernementaux Canada

FOWLER BAULD & MITCHELL
architecture
Fowler Bauld & Mitchell Ltd.
PO Box 514, Suite 102
1660 Hollis Street
Halifax, Nova Scotia B3J 2R7
Tel: 902 429 4100
Fax: 902 425 3063
architects@fbm.ns.ca
www.fbm.ns.ca

CBCL LIMITED
Consulting Engineers
ISO 9001 CERTIFIED

LICENSED ARCHITECT
MATTHEW M. MOSKY
NOVA SCOTIA ASSOCIATION OF ARCHITECTS
17 JUN 2014

revisions		date
0	ISSUED FOR TENDER	

project / projet

SPRINGHILL SOLID WASTE MANAGEMENT CENTRE

Springhill, NS

drawing / dessin

SECTION DETAILS AND STAIRS

designed / conçu: GPF
date: MARCH 2012
drawn / dessiné: SLM
date: MARCH 2012
approved / approuvé
date
Tender / Soumission
PWGSC Project Manager / Administrateur de projets TPSGC: 2014-06-11

project number / no. du projet: R.043944.002

drawing no. / no. du dessin: A11