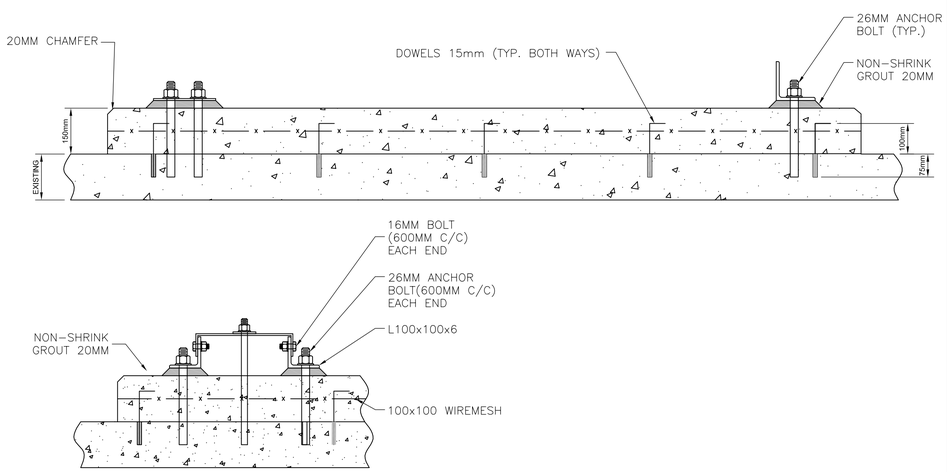

3 M401 NEW HOUSEKEEPING PAD DETAIL
SCALE; NTS

DRAWING NOTES

1. FROM CONDENSATE TANK IN BASEMENT.
2. EXISTING CONDENSATE TRANSFER PUMPS P-1 AND P-2 TO BE DEMOLISHED AND REPLACED.
3. EXISTING CONDENSATE PIPING TO EXPANSION TANK TO REMAIN.
4. CONDENSATE PIPING FROM DEAERATOR INTO BASEMENT CONDENSATE TANK.
5. CONDENSATE PIPING FROM AIR HANDLER TO BASEMENT CONDENSATE TANK.
6. FEEDWATER PIPING FROM CONDENSATE TANK TO FEEDWATER PUMPS P-6, P-7, AND P-8. PIPING WILL BE ISOLATED BY VALVES AT FEEDWATER PUMP ASSEMBLY UPON COMPLETION OF NEW CONDENSATE PUMP INSTALLATION.
7. PUMPED CONDENSATE FROM BASEMENT CONDENSATE TANK INTO DEAEARATOR.
8. FEEDWATER FROM DEAERATOR TO FEEDWATER PUMPS P-6, P-7, AND P-8 IN BASEMENT.
9. FEEDWATER FROM FEEDWATER PUMPS P-6, P-7, AND P-8 TO STEAM GENERATOR #1 ON 1ST FLOOR.
10. OBSOLETE FEEDWATER PIPING FOR STEAM GENERATORS #1, #2, AND #3 TO BE DEMOLISHED. REFER TO OTHER DRAWINGS FOR SCOPE OF DEMOLITION.
11. DEMOLISH CONDENSATE TRANSFER PUMPS P-4 AND P-5 BACK TO MAIN AT THIS POINT AND CAP REMAINING STUBS. PUMPS ARE TO BE DEMOLISHED UP TO CONDENSATE TANK CONNECTION AND STUBBED AT CONDENSATE TANK.

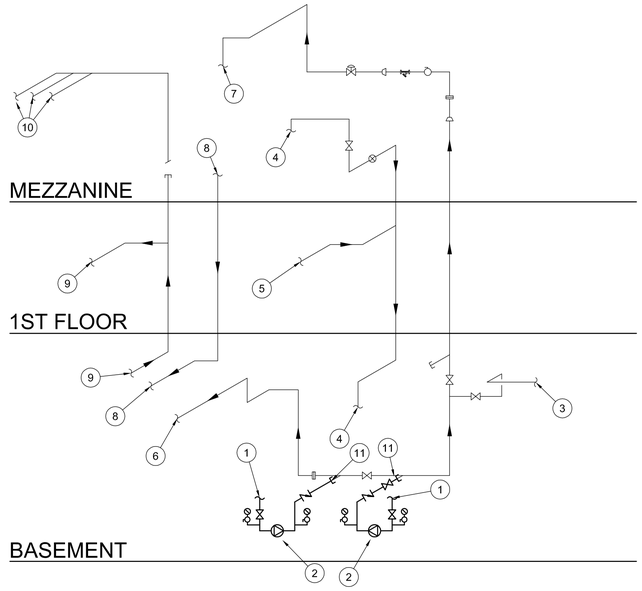

1 M401 CONDENSATE TRANSFER PUMPS - DEMOLITION
SCALE; NTS

CONSTRUCTION PROPOSED PHASING

.1 EXISTING THERMAL FLUID BOILER #1 IS TO BE MAINTAINED IN OPERATION UNTIL NEW BOILER IS COMMISSIONED AND FULLY OPERATIONAL. NO WORK IS TO BE DONE ON EXISTING THERMAL FLUID BOILER #1 UNTIL IT IS CONFIRMED THAT NEW BOILER CAN MEET STEAM DEMAND FOR PLANT.

.2 MAINTAIN ALL PIPING CONNECTIONS FOR THERMAL FLUID BOILER #2 AND STEAM GENERATOR #2 THAT WOULD BE REQUIRED FOR A TEMPORARY BOILER. DEMOLISH ALL OTHER EQUIPMENT, PIPING, AND ACCESSORIES THAT ARE NOT ASSOCIATED WITH THERMAL FLUID BOILER #1 AND STEAM GENERATOR #1.

.3 INSTALL NEW BOILER AND ALL ASSOCIATED EQUIPMENT, PIPING, AND ACCESSORIES.

.4 COMMISSION NEW BOILER.

.5 UPON COMPLETION OF NEW BOILER COMMISSIONING AND CONNECTIONS TO PLANT, DEMOLISH ALL PIPING FOR THERMAL FLUID BOILER #2 AND STEAM GENERATOR #2 THAT WAS MAINTAINED FOR POTENTIAL TEMPORARY BOILER CONNECTIONS.

2 .6 COMPLETE EXISTING THERMAL BOILER #1 PIPING DEMOLITIONS AND CONTROLS REPLACEMENT.

DRAWING NOTES

1. CONNECT TO CONDENSATE IN BASEMENT WHERE OLD PUMPS P-1 AND P-2 WERE CONNECTED.
2. NEW CONDENSATE PUMPS P-1 AND P-2 TO BE INSTALLED NEXT TO CONDENSATE TANK ON NEW 150mm HOUSEKEEPING PAD. REFER TO M200 FOR INSTALLATION LOCATION.
3. EXISTING CONDENSATE PIPING TO EXPANSION TANK TO REMAIN.
4. CONDENSATE PIPING FROM DEAERATOR INTO BASEMENT CONDENSATE TANK.
5. CONDENSATE PIPING FROM AIR HANDLER TO BASEMENT CONDENSATE TANK.
6. FEEDWATER PIPING FROM CONDENSATE TANK TO FEEDWATER PUMPS P-6, P-7, AND P-8. PIPING WILL BE ISOLATED BY VALVES AT FEEDWATER PUMP ASSEMBLY UPON COMPLETION OF NEW CONDENSATE PUMP INSTALLATION.
7. PUMPED CONDENSATE FROM BASEMENT CONDENSATE TANK INTO DEAEARATOR.
8. FEEDWATER FROM DEAERATOR TO FEEDWATER PUMPS P-6, P-7, AND P-8 IN BASEMENT.
9. FEEDWATER FROM FEEDWATER PUMPS P-6, P-7, AND P-8 TO STEAM GENERATOR #1 ON 1ST FLOOR.
10. OBSOLETE FEEDWATER PIPING FOR STEAM GENERATORS #1, #2, AND #3 TO BE DEMOLISHED. REFER TO OTHER DRAWINGS FOR SCOPE OF DEMOLITION.
11. CLOSE ISOLATING VALVE AND MARK PIPING DOWNSTREAM AS NOT IN USE UPON COMPLETION OF NEW PUMP INSTALLATION.

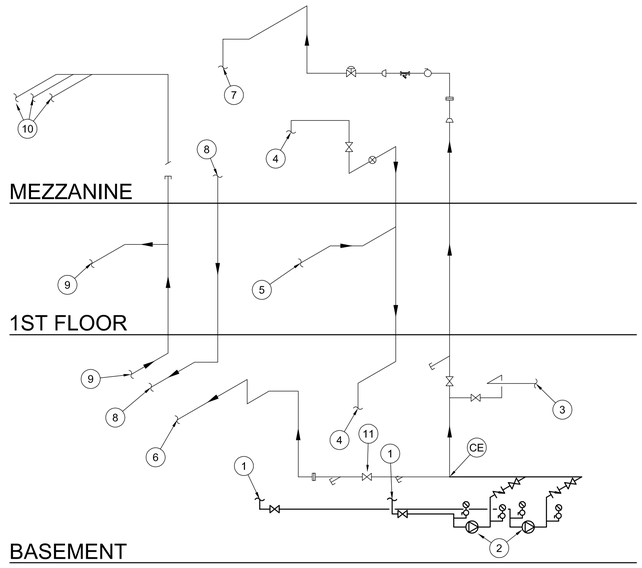

2 M401 CONDENSATE TRANSFER PUMPS - NEW
SCALE; NTS

2

BOILER SCHEDULE

ID	THERMAL INPUT (kW)	THERMAL OUTPUT (kW)	EQUIVALENT OUTPUT AT 100 °C (kg/hr)	FUEL			FEEDWATER TEMPERATURE (°C)	THERMAL EFFICIENCY	BURNER MODULATION	PRESSURE (kPa)			ELECTRICAL				COMMENTS
				TYPE	INPUT (m^3/hr)	INLET PRESSURE (kPa)				DESIGN	OPERATING	SAFETY VALVE SETTINGS	VOLTS (V)	PHASE	HZ	AMPS (A)	
NEW BOILER	3678.9	2943.3	4693.7	NATURAL GAS	355.5	35-70	96	83%	10:1	1723.7	861.8	1034	575	3	60	50	1

COMMENTS:

1 - LOW WATER VOLUME DESIGNATION TO TSSA STANDARDS.

Public Works and Government Services Canada
Architectural and Engineering Services
Ontario Region

Travaux publics et Services gouvernementaux Canada
Services d'architecture et de génie
Région de l'Ontario

Key plan
Plan clé

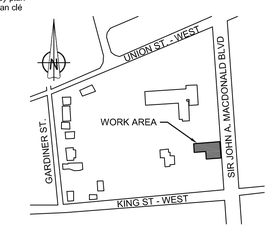

LICENSED PROFESSIONAL ENGINEER
2014-08-26
C. J. MCGEE
100161414
PROVINCE OF ONTARIO

revision	description	date
02	ISSUED FOR ADDENDUM 3	2014/08/26
01	ISSUED FOR ADDENDUM 2	2014/08/14
00	ISSUED FOR ADDENDUM 1	2014/08/08

Do not scale drawings.
Verify all dimensions and conditions on site and immediately notify the engineer of all discrepancies.

A Detail No. / No. du detail
B drawing no. - where detail required / dessin no. - où détail exigé
C drawing no. - where detailed / dessin no. - où détaillé

project title / titre du projet
OTTAWA ONTARIO
CLIENT
560 KING STREET,
KINGSTON, K7L 4V7
KINGSTON PENITENTIARY
HEATING PLANT UPGRADE

drawing title / titre du dessin
DETAILS AND SCHEDULES

drawn by / dessiné par: DEAN PROCTOR
designed by / conçu par: CARY MCGEE
approved by / approuvé par: CARY MCGEE
tender / soumission: DUNCAN PARKER, P.ENG.
project manager / administrateur de projets
project date / date du projet: 2014/04/07
project no, no. du projet: R.068125.001
drawing no. / dessin no.: M401