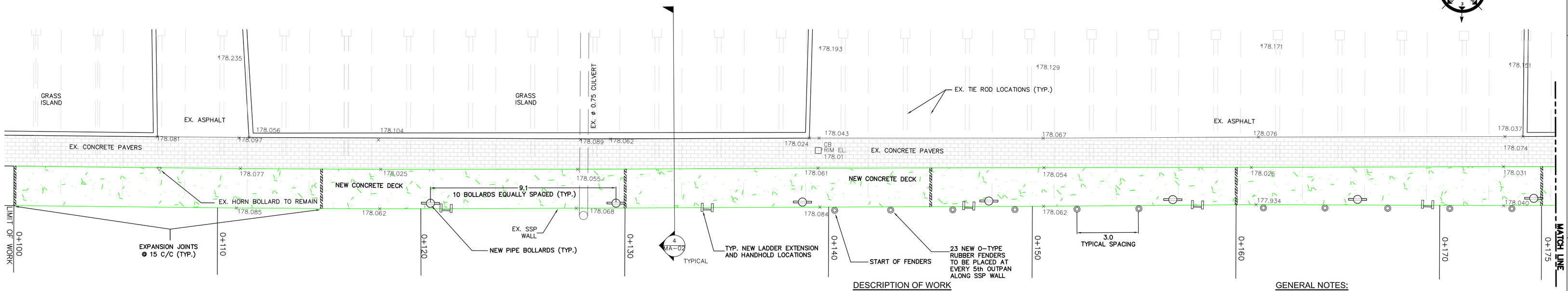

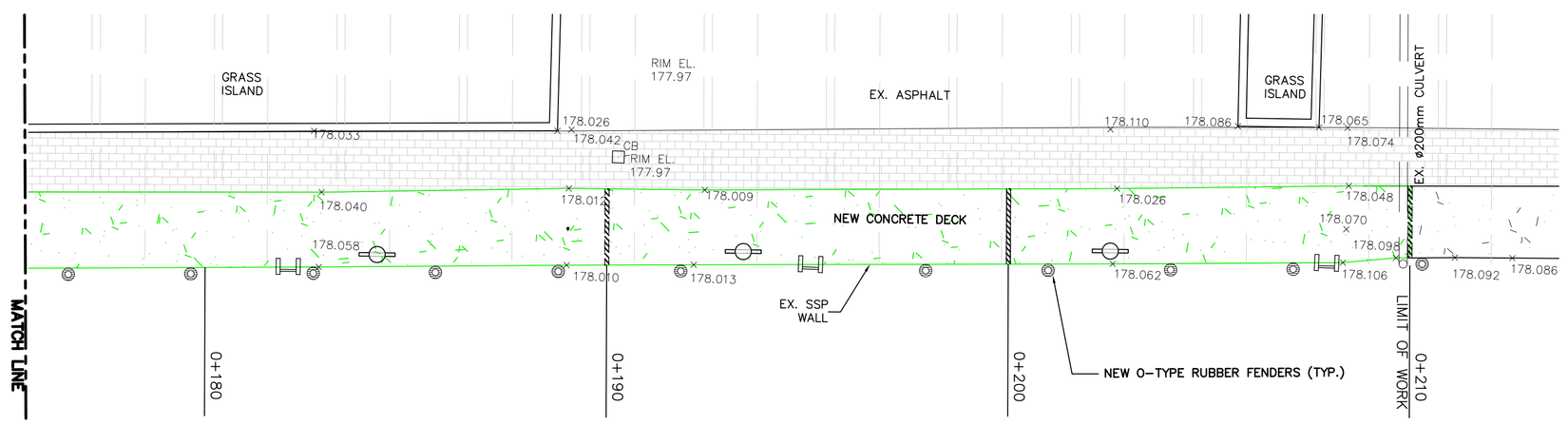

NEW CONCRETE WHARF PLAN

SCALE: 1:100 — 1 / MA-02

SELECTIVE SITE DEMOLITION:

REMOVE & DISPOSE:

1. A MIN. OF 250mm CONCRETE
2. BELL BOLLARDS
3. LADDER HANDHOLDS
4. MOORING CLEATS & RINGS
5. STEEL PILE CAP
6. TIMBER FENDERS & RUBBER TIRES

SALVAGE AND STORE CONCRETE PAVERS AS REQ'D FOR REUSE

DESCRIPTION OF WORK

THE SCOPE OF WORK UNDER THIS CONTRACT COVERS :

CONCRETE SLAB REHABILITATION

1. REMOVALS OF EXISTING CONCRETE WHERE INDICATED ALONG THE EXISTING WEST BASIN WALL.
2. THE INSTALLATION OF REINFORCEMENT AND FORMWORK ETC IN ORDER TO SATIFACTORILY COMPLETE THE DESIGNATED CONCRETE WORK.
3. THE FABRICATION AND INSTALLATION OF NEW BOLLARDS, RUBBER FENDERS, LADDER EXTENSIONS, & HANDHOLDS ALONG THE WHARF.
4. THE WORK TO BE DONE BY THE CONTRACTOR UNDER THIS CONTRACT SHALL INCLUDE THE FURNISHING OF ALL SUPERINTENDENCE, OVERHEAD, LABOUR, MATERIALS, EQUIPMENT, TOOLS, SUPPLIES, INSURANCE, AND ALL THINGS NECESSARY FOR AND INCIDENTAL TO THE SATISFACTORY PERFORMANCE OF ALL WORK SPECIFIED HEREIN. ALL WORK IS TO BE DONE IN ACCORDANCE WITH DETAILS SHOWN ON THE ACCOMPANYING PLANS AS SPECIFIED HEREIN.

GENERAL NOTES:

1. THE CONTRACTOR SHALL CONFIRM THE POSITION OF ALL UTILITIES AND STRUCTURES WITHIN THE WORK AREAS AND INFORM HIMSELF AS TO THE EXACT LOCATION OF ALL SUCH UTILITIES AND STRUCTURES AND SHALL ASSUME LIABILITY FOR DAMAGE TO THEM.

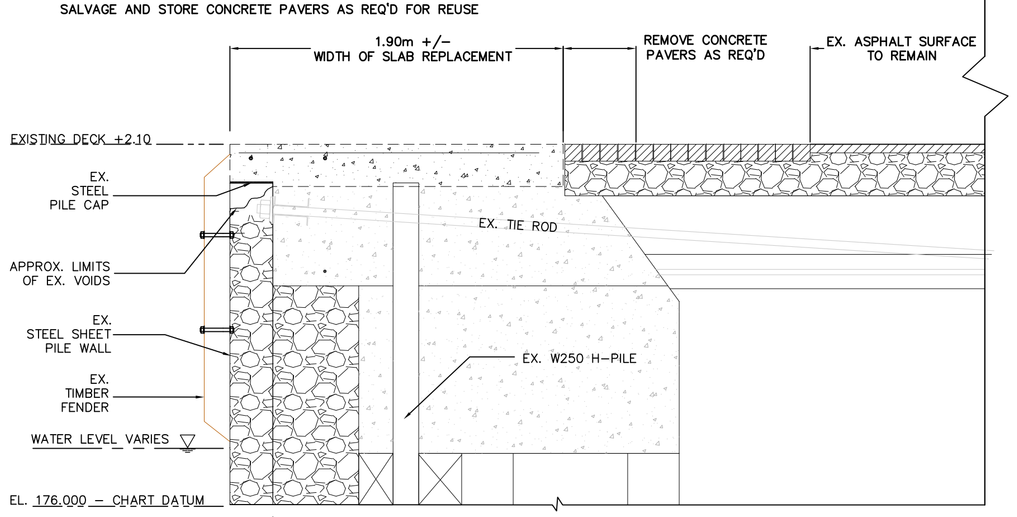

EXISTING WHARF REMOVALS SECTION (TYPICAL BETWEEN STA 0+100 +/- AND 0+210 +/-)

SCALE: 1:25 — 2 / MA-02

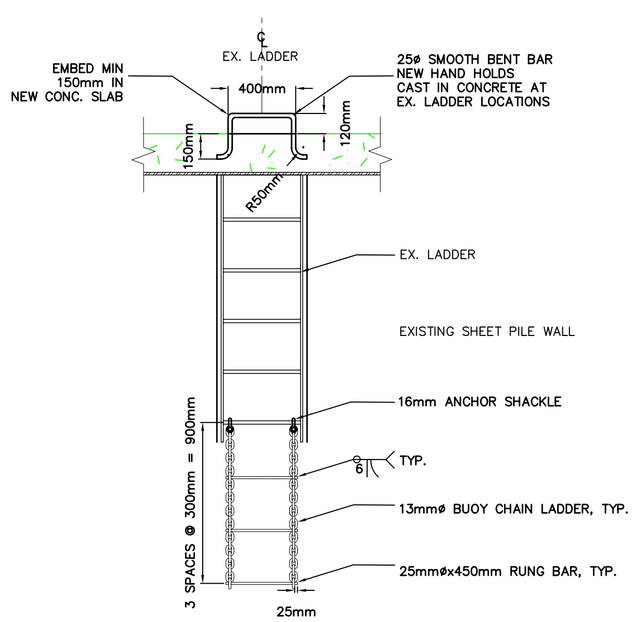

LADDER ELEVATION DETAIL

SCALE: 1:25 — 3 / MA-2

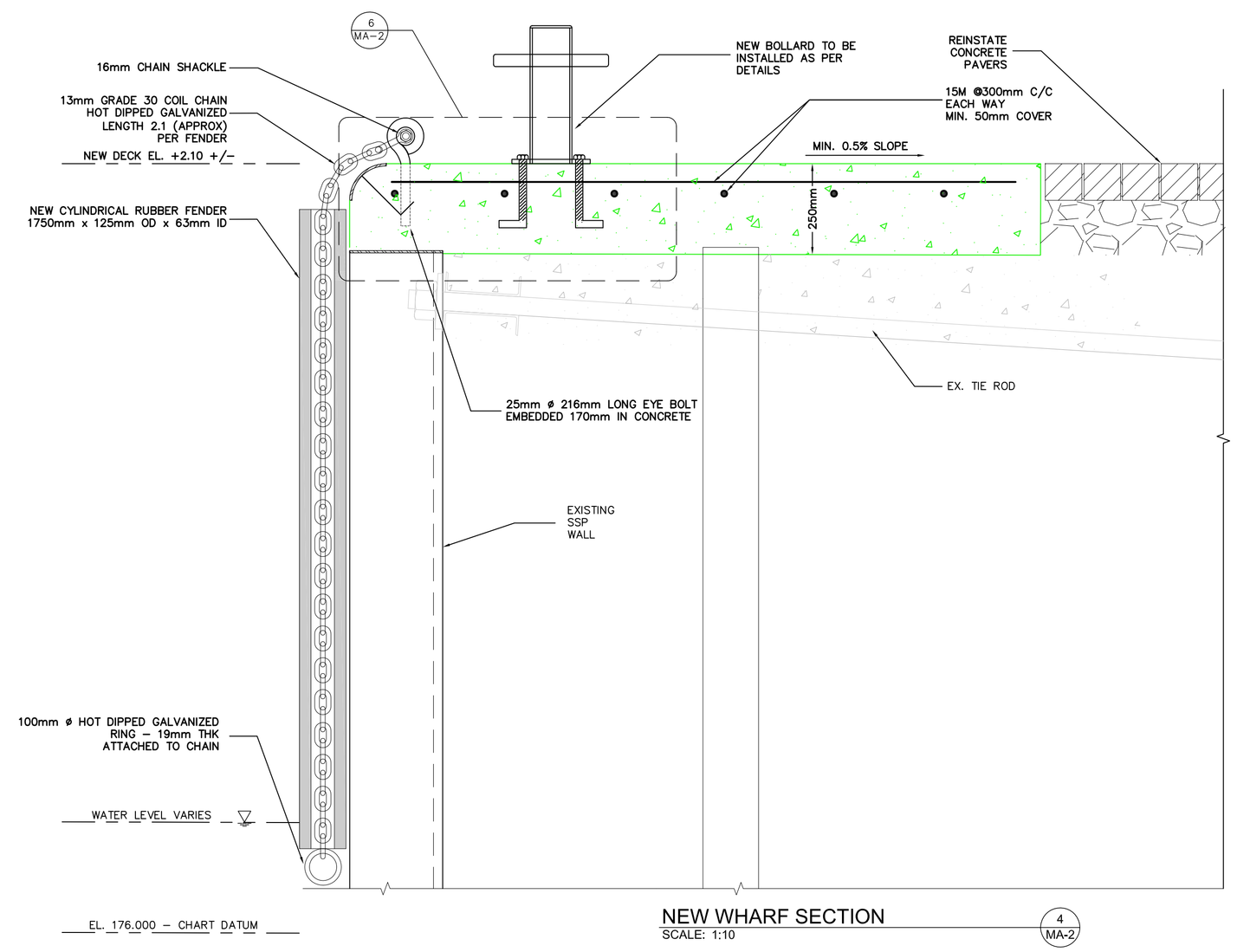

NEW WHARF SECTION

SCALE: 1:10 — 4 / MA-2

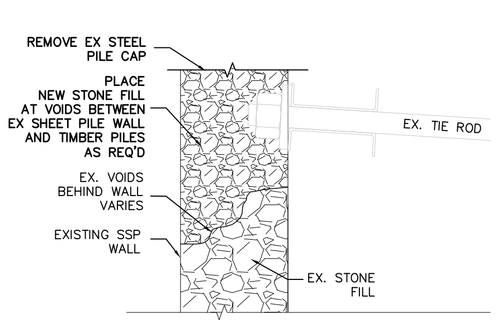

STONE FILL ELEVATION

SCALE: 1:10 — 5 / MA-02

NOTE: BOLLARD NOT SHOWN FOR CLARITY

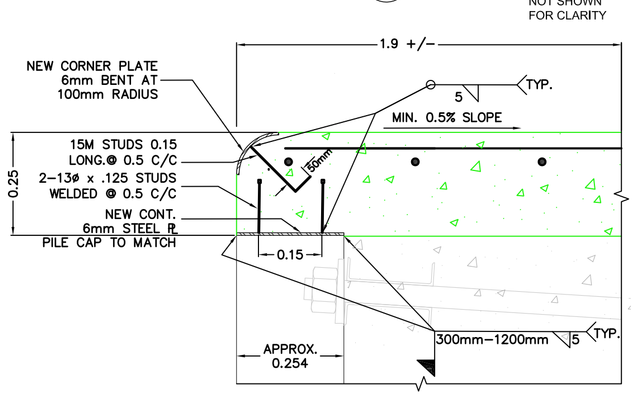

CORNER PLATE DETAIL

SCALE: 1:10 — 6 / MA-02

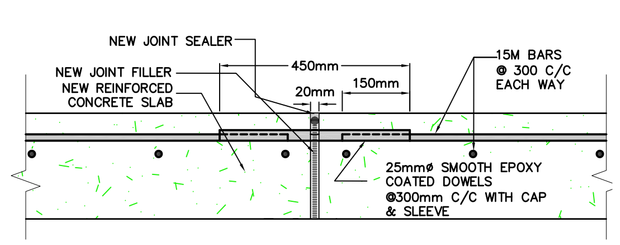

TYPICAL EXPANSION JOINT DETAIL

SCALE: 1:10 — 7 / MA-02

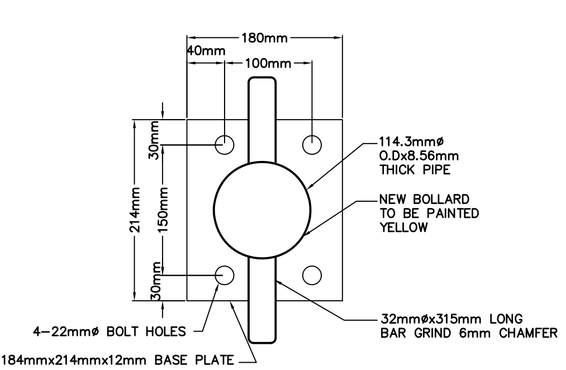

NEW BOLLARD PLAN

SCALE: 1:5 — 8 / MA-02

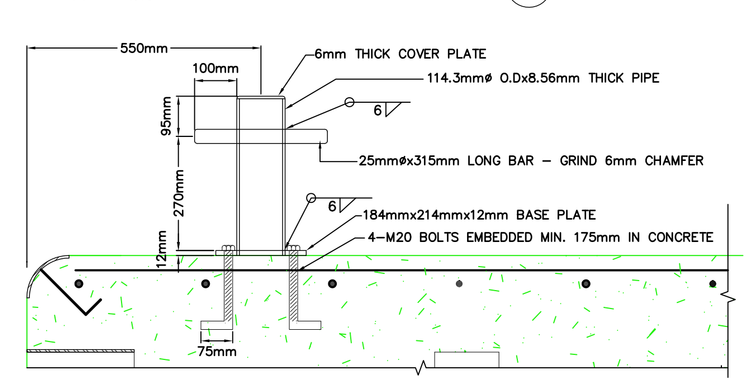

NEW BOLLARD SECTION

SCALE: 1:10 — 9 / MA-02

GOVERNMENT OF CANADA — GOUVERNEMENT DU CANADA

FISHERIES AND OCEANS — PÊCHES ET OCÉANS

SMALL CRAFT HARBOURS
CENTRAL AND ARCTIC REGION

NOTES:

1. ELEVATIONS WERE TAKEN ON JUNE 12 2014
2. CHART DATUM FOR LAKE HURON IS 176.0m ABOVE SEA LEVEL.
3. WATER LEVEL AT THE TIME OF SURVEY WAS 0.327 ABOVE CHART DATUM
4. COORDINATES FOR HORIZONTAL CONTROL ARE GIVEN ON THE U.T.M. MAPPING PLANE, ZONE 17, USING THE NORTH AMERICAN DATUM OF 1983 (NAD83)
5. ALL MEASUREMENTS IN METERS UNLESS OTHERWISE NOTED.

BENCHMARK INFO

GEODETIC SURVEY CANADA
BRONZE TABLET ON TOP SURFACE
OF CONCRETE WHARF.
BM No. 110-R
ELEVATION: 178.092m I.G.L.D. 1985

(+2.092 ABOVE I.G.L.D.)

LEGEND

- EXISTING CATCH BASIN
- EXISTING HORN BOLLARD
- EXISTING LADDER LOCATIONS
- NEW PIPE BOLLARD
- NEW RUBBER FENDER
- 178.000 EXISTING ELEVATION
- NEW EXPANSION JOINT

REVISIONS:

0 ISSUED FOR TENDER 2014-08-15

SCALE: AS NOTED

CLASS:

PROJECT: WHARF REPAIRS

DESCRIPTION: NEW WHARF PLAN SECTIONS & DETAILS

DRAWN: K.M.B

APPROVED: M.M

DATE: JUNE 2014

DATE: JUNE 2014

LOCATION: MEAFORD HARBOUR ONTARIO

DRAWING NO.: MA-02

LOCATOR CODE: 4708