LEGEND:

NEW LIGHT POLE C/W 2 LIGHTING FIXTURES

NEW ELECTRICAL PEDESTAL

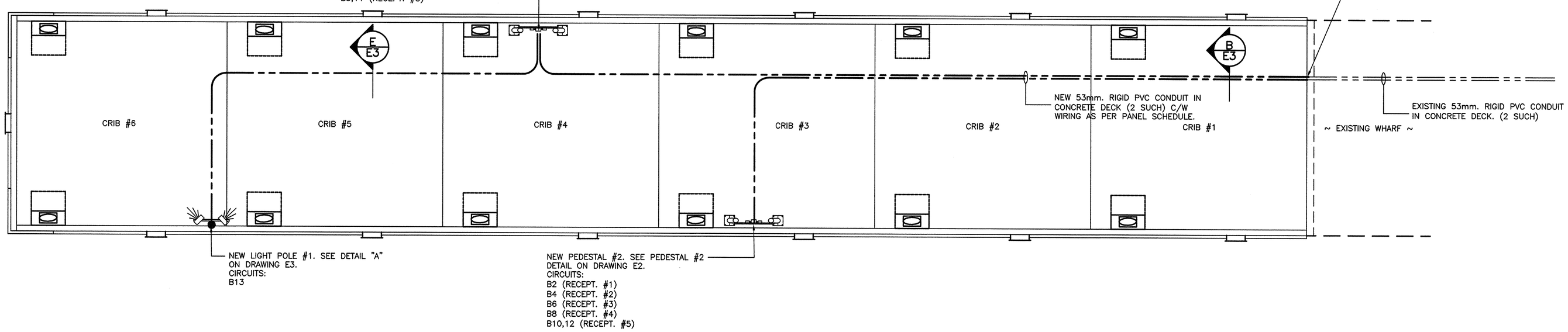

NEW WHARF ELECTRICAL LAYOUT

SCALE : 1:75

0m 1m 2m 3m 4m 5m 6m 7m 8m 9m 10m

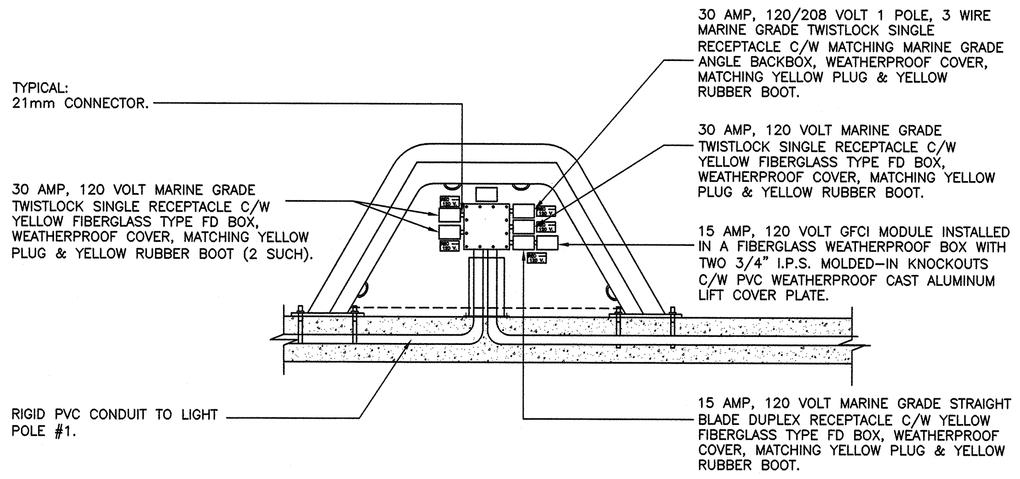

ELECTRICAL PEDESTAL #1 – RECEPTACLE DETAILS

N.T.S.

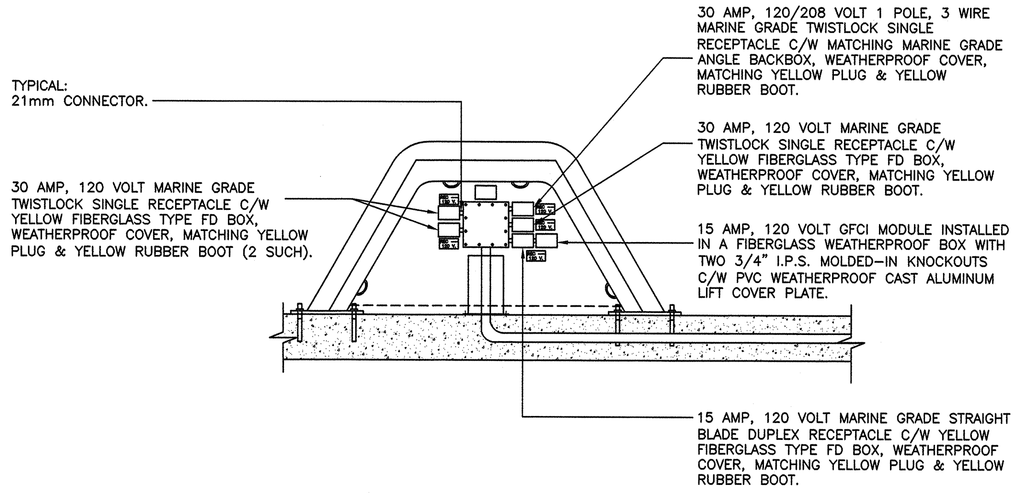

ELECTRICAL PEDESTAL #2 – RECEPTACLE DETAILS

N.T.S.

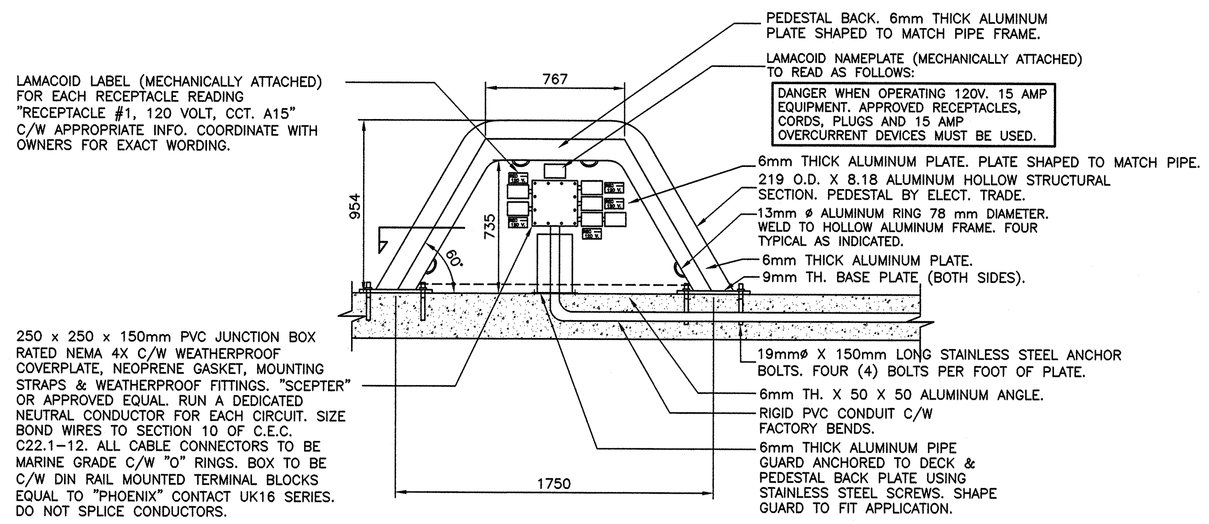

ELEVATION

PEDESTAL BY ELECTRICAL TRADE.
SUBMIT SHOP DRAWINGS PRIOR TO MANUFACTURE.

NOTE:

1. REINFORCING OMITTED FOR CLARITY.
2. MOUNT RECEPTACLES IN PVC FD TYPE OUTLET BOX, COVER, GASKET & MOUNTING LUGS. HUBS, WEATHER PROOF FITTINGS, CAST "CROUSE HINDS" OR EQUAL, C/W 21mm CONNECTORS.
3. PROVIDE ALUMINUM ANGLE MOUNTING BRACKETS WELDED TO THE BACK PLATE, FOR ALL RECEPTACLES.
4. UTILIZE RIGID PVC CONDUIT C/W MARINE GRADE FITTINGS. SECURE TO PEDESTAL USING 2 HOLE STRPS & S.S. SCREWS. TYPICAL.

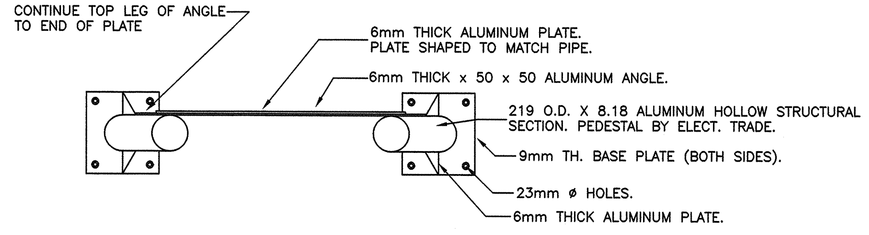

ELECTRICAL PEDESTAL – ELEVATION AND DETAILS

SCALE : 1:20

0mm 500mm 1000mm 1500mm 2000mm 2500mm

CEL PROJECT NO. 14-1852

Public Works and Government Services Canada / Travaux Publics et Services gouvernementaux Canada

GENERAL NOTES:

1. DO NOT SCALE FROM THIS DRAWING.
2. CONTRACTOR TO VERIFY ALL DIMENSIONS ON SITE BEFORE PROCEEDING WITH THIS WORK.
3. SEE ASSOCIATED PROJECT SPECIFICATIONS.

PROVINCE OF NEWFOUNDLAND
PERMIT HOLDER
Class "A"
This Permit Allows
CROSBIE ENGINEERING LIMITED

To practice Professional Engineering in Newfoundland and Labrador Permit No. as issued by PEG-NL D0123 which is valid for the year 2014.

STAMP

REGISTERED PROFESSIONAL ENGINEER
PEGL
KENNETH R.P. NEIL
AUG. 04/14
NEWFOUNDLAND & LABRADOR

revisions		date
0	ISSUED FOR TENDER	08/04/14
A	ISSUED FOR REVIEW	11/07/14

project / projet

WHARF EXTENSION

HARBOUR GRACE, NL

drawing / dessin

NEW WHARF – ELECTRICAL LAYOUT AND DETAILS

designed / conçu: K.N.
date: JULY 2014
drawn / dessiné: D.R.
date: JULY 2014
approved / approuvé
date
Tender / Soumission
PWGSC Project Manager / Administrateur de projets TPSGC

project number / no. du projet: R.071732.001

drawing no. / no. du dessin: E2

PWGSC B1 (2004)

E-DRM/GDD-E: #495515 Version 1