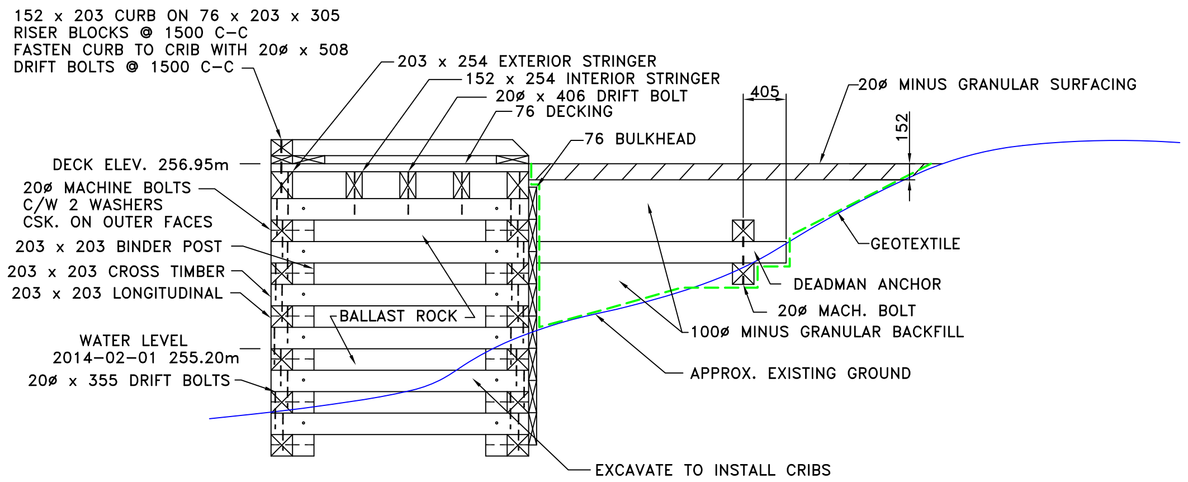

SECTION A–A
SCALE: 1:40

NOTE:
CONTRACTOR TO VERIFY ALL DIMENSIONS IN FIELD PRIOR TO FABRICATION TO ENSURE CONFORMITY WITH CRIBS, FLOAT WHARVES, & WALKWAYS

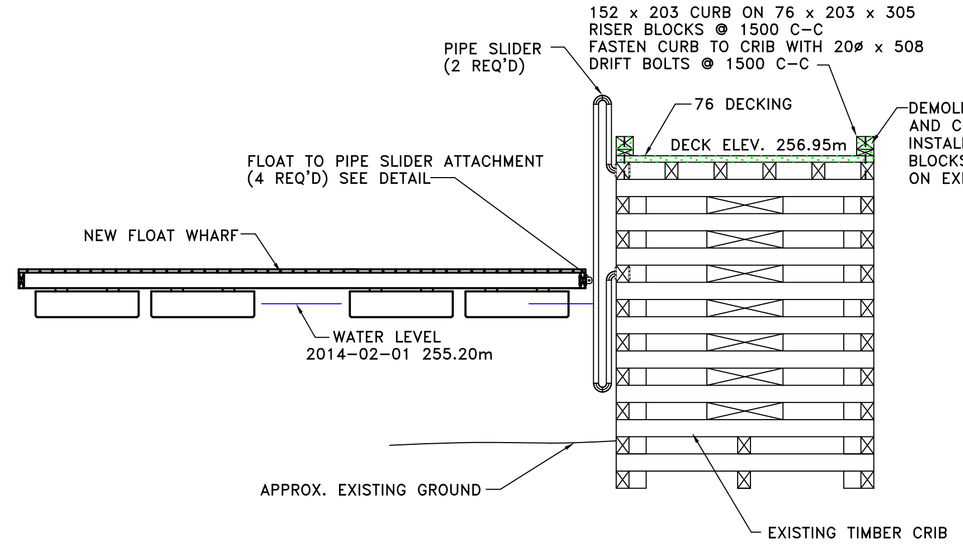

FLOAT TO CRIB CONNECTION
SCALE: 1:50

NOTE:
ALL STEEL HARDWARE TO BE COATED WITH 2 COATS OF RED SHOP PRIMER

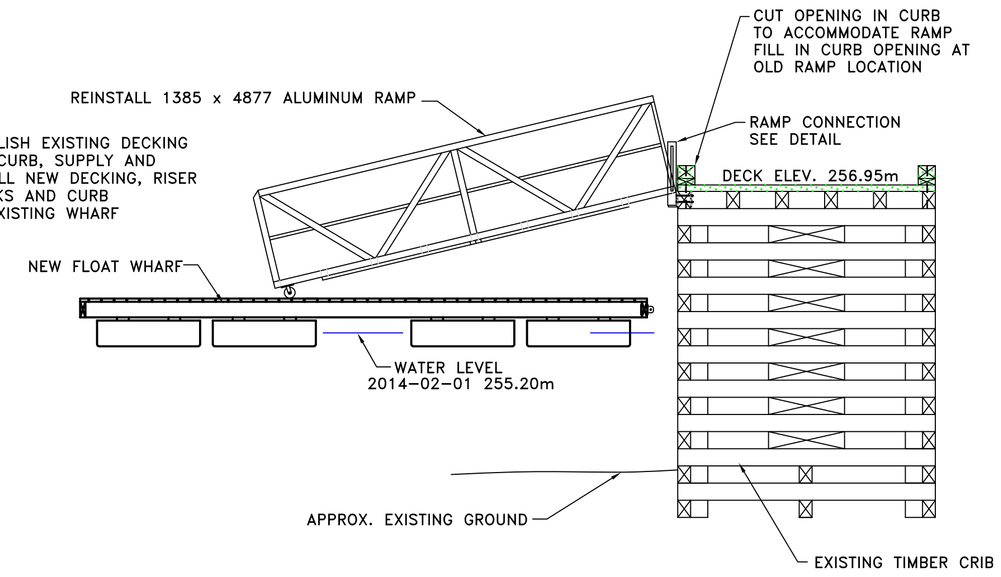

RAMP TO CRIB CONNECTION
SCALE: 1:50

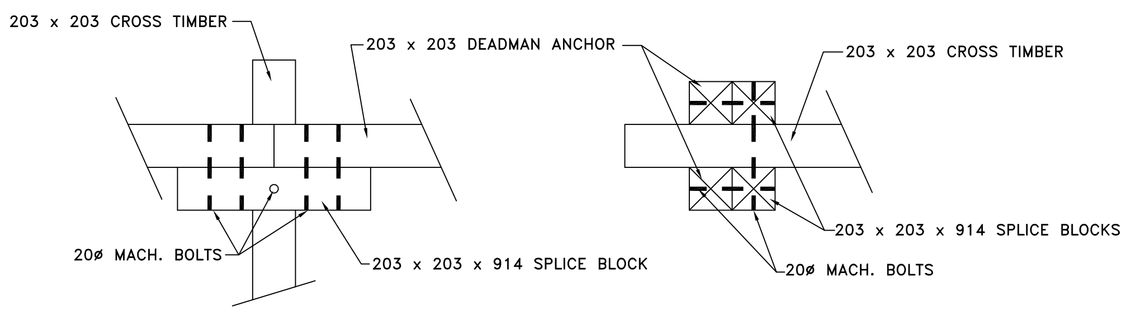

DEADMAN ANCHOR SPLICE DETAIL
SCALE 1:20

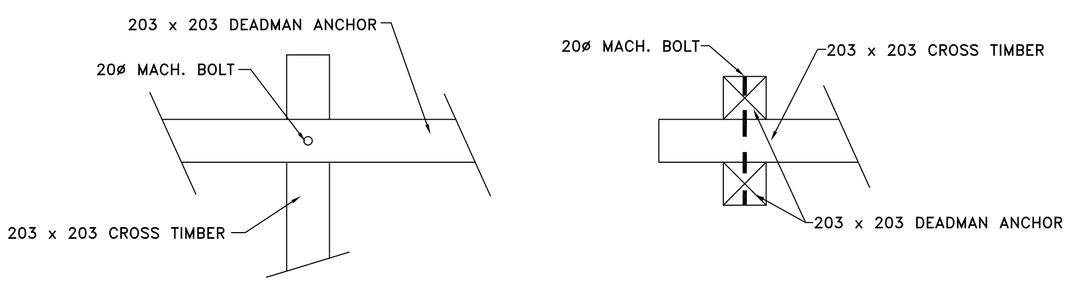

DEADMAN ANCHOR DETAIL
SCALE 1:20

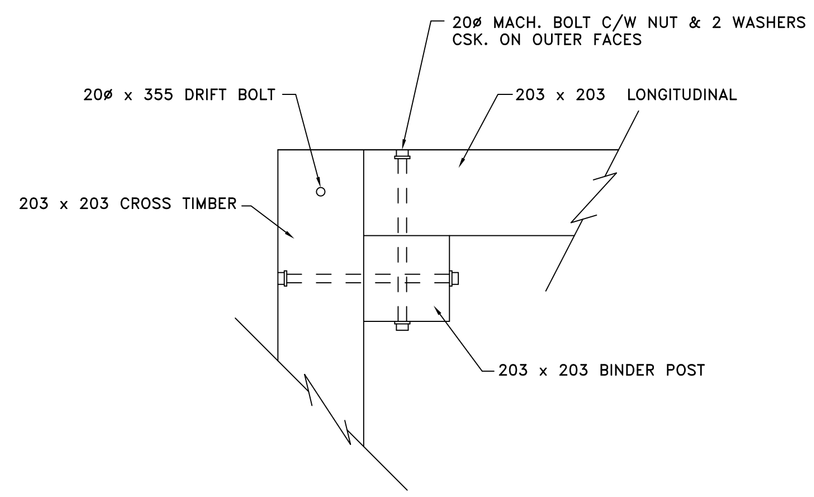

BINDER POST DETAIL
SCALE 1:10

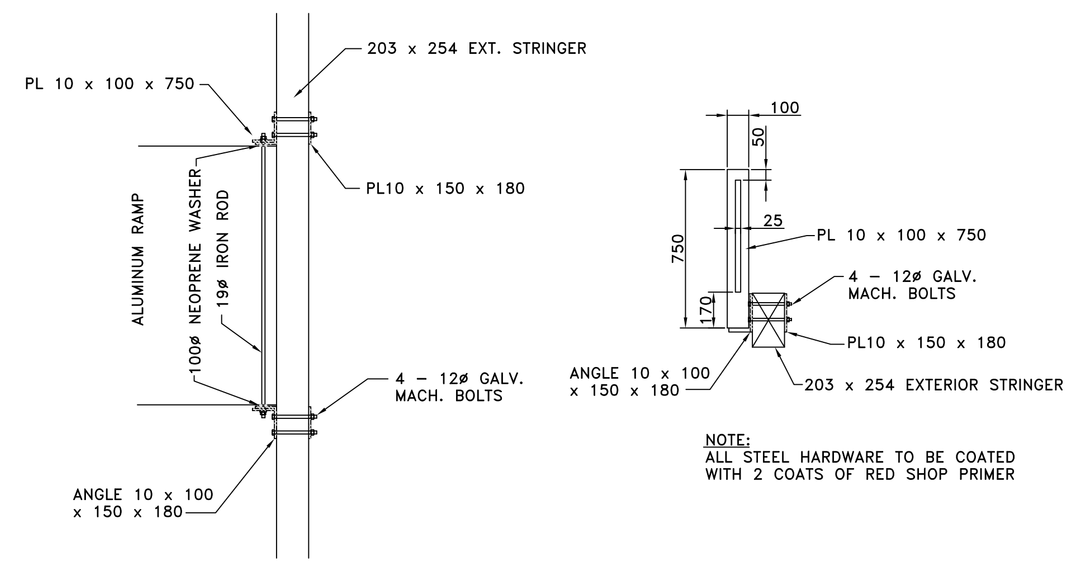

NOTE:
ALL STEEL HARDWARE TO BE COATED WITH 2 COATS OF RED SHOP PRIMER

RAMP CONNECTION DETAILS
SCALE: 1:20

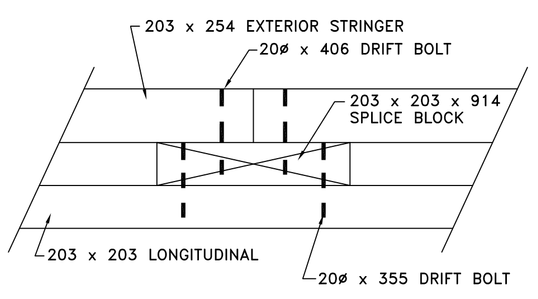

SPLICE BLOCK DETAIL
SCALE 1:20

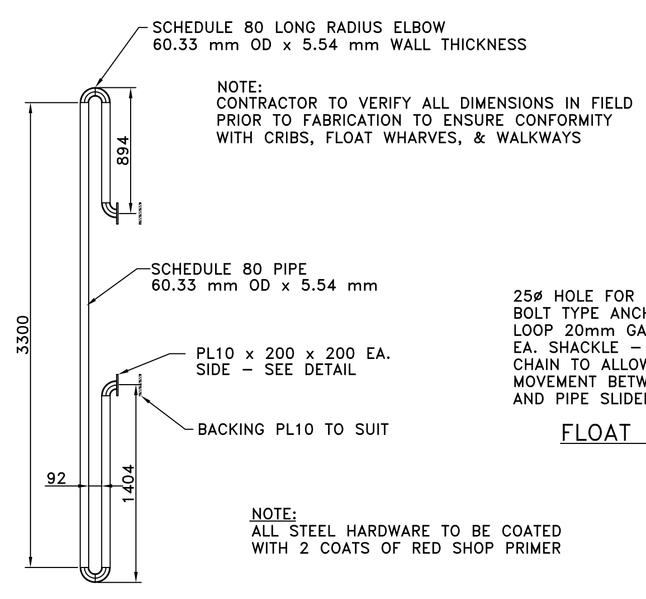

NOTE:
CONTRACTOR TO VERIFY ALL DIMENSIONS IN FIELD PRIOR TO FABRICATION TO ENSURE CONFORMITY WITH CRIBS, FLOAT WHARVES, & WALKWAYS

NOTE:
ALL STEEL HARDWARE TO BE COATED WITH 2 COATS OF RED SHOP PRIMER

PIPE SLIDER DETAIL
SCALE: 1:30

NOTES:
1. CONTRACTOR TO SUPPLY ALL HARDWARE
2. ALL HARDWARE TO BE COATED WITH 2 COATS RED SHOP PRIMER

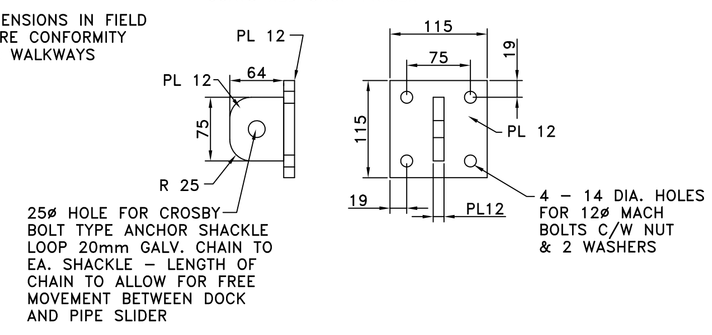

FLOAT TO PIPE SLIDER ATTACHMENT (4REQ'D)
SCALE: 1:5

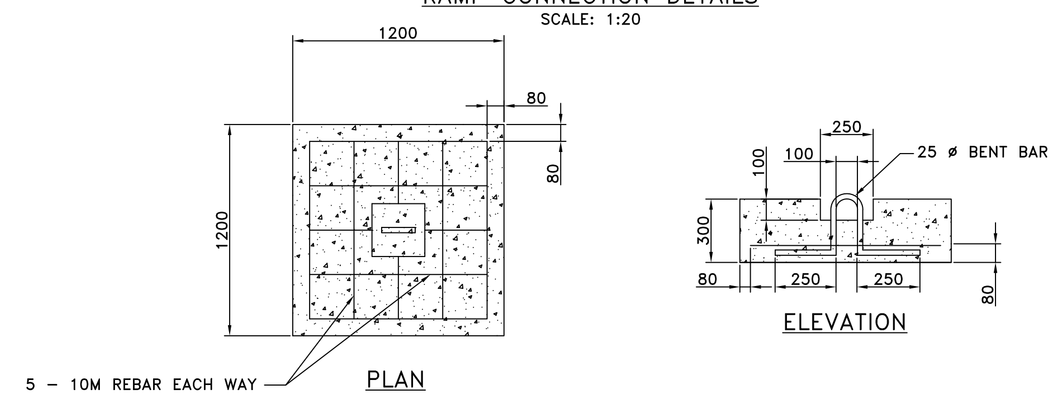

CONCRETE ANCHOR BLOCK DETAIL (4 REQ'D)
SCALE: 1:20

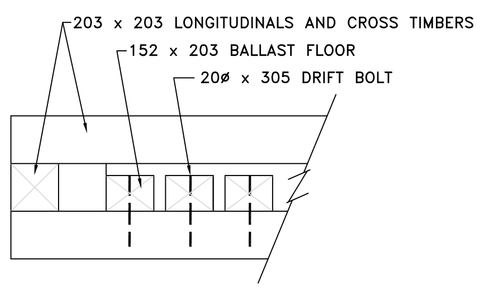

BALLAST FLOOR DETAIL
SCALE 1:30

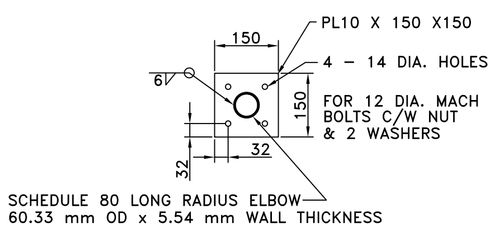

PIPE SLIDER PLATE DETAIL
SCALE: 1:10

NOTE:
ANCHOR BLOCKS, CHAINS AND ALL CONNECTING HARDWARE TO BE SUPPLIED BY CONTRACTOR

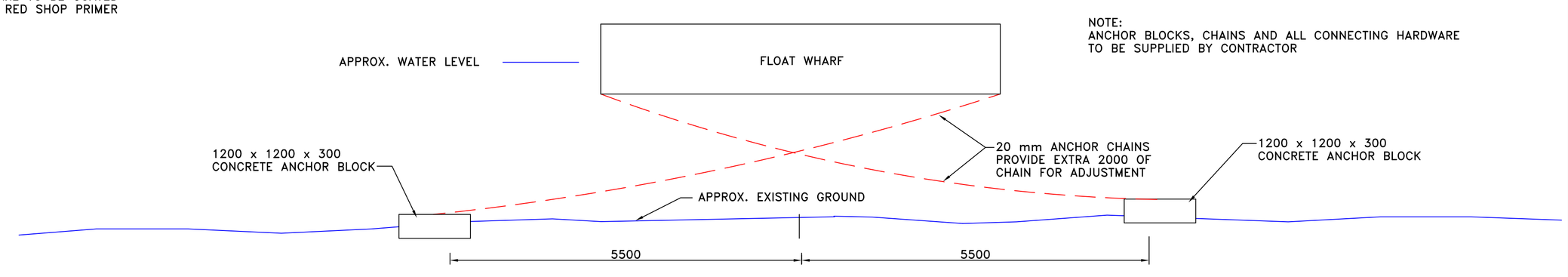

ELEVATION – ANCHOR BLOCK INSTALLATION
NOT TO SCALE

GOVERNMENT OF CANADA / GOUVERNEMENT DU CANADA
FISHERIES AND OCEANS / PÊCHES ET OCÉANS

SMALL CRAFT HARBOURS
CENTRAL AND ARCTIC REGION

NOTES:
1. ALL DIMENSIONS ARE IN MILLIMETRES UNLESS OTHERWISE STATED
2. ALL TIMBER TO BE ROUGH SAWN
3. DECKING TO BE ROUGH SAWN SIZED
4. ELEVATIONS SHOWN ARE IN METRES
5. ALL WELDS TO BE 6mm CONTINUOUS FILLET WELDS UNLESS OTHERWISE NOTED
6. PROVIDE ENGINEER WITH 48 HOURS NOTICE INSTALLING CRIBS OR BACKFILLING

REVISIONS:		DATE:
0	ISSUED FOR TENDER	AUG. 25, 2014

SCALE: AS SHOWN
CLASS:

PROJECT: WHARF REPAIRS

DESCRIPTION: CONSTRUCTION DETAILS

DRAWN: SCH
APPROVED: SCH
DATE: AUGUST 2014
DATE: AUGUST 2014

LOCATION: EASTERVILLE MANITOBA

DRAWING NO.: C–2 of 3
LOCATOR CODE: 5516