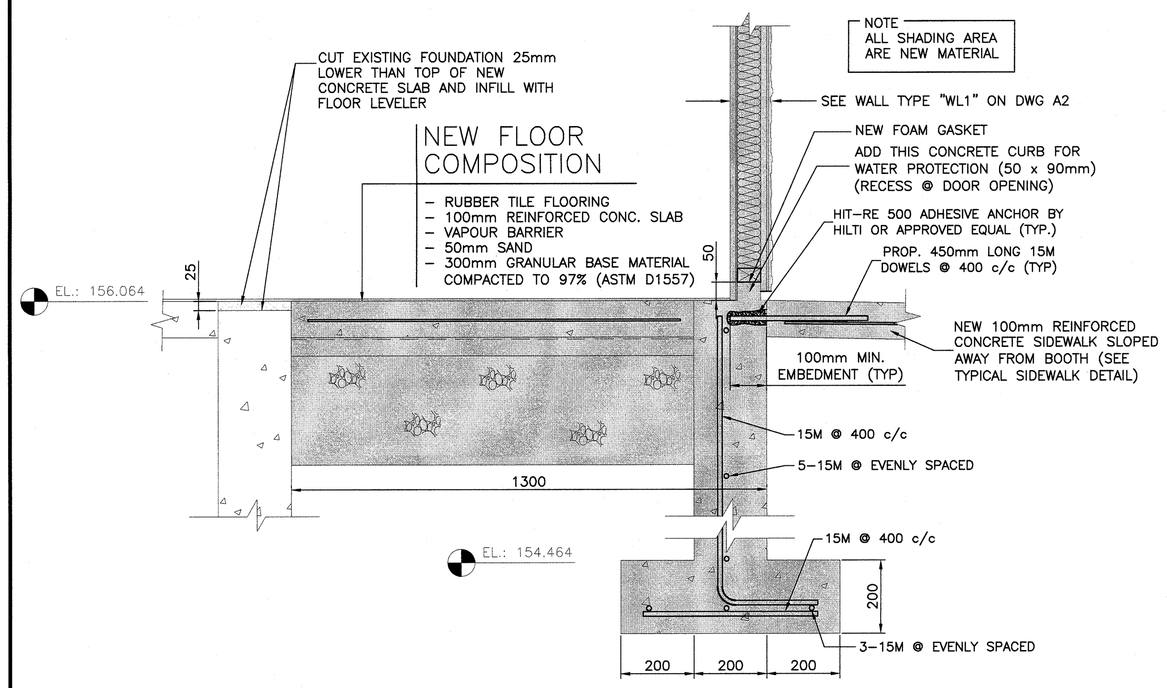


## PIL BOOTH #1 SECTION H/A4

SCALE : 1:10

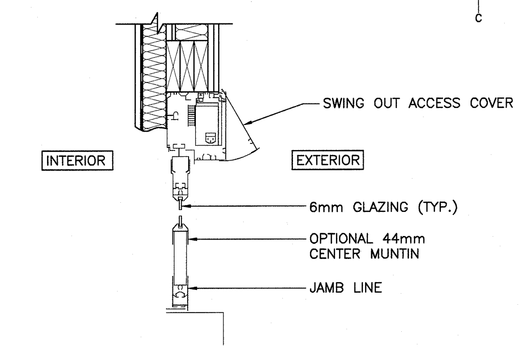


## TYPICAL DOOR DETAIL

SCALE : 1:10

0mm 100 200 300 400 500 600 700 800 900 1000mm

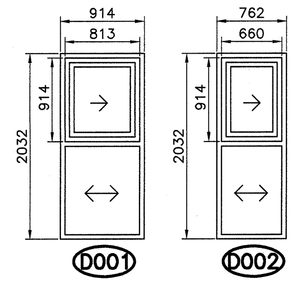


NOTE
TYPE: COMMERCIAL HALF-LITE ALUMINUM SLIDER

DOOR w/ SINGLE TEMPERED SLIDER WINDOW & LOWER ALUM. KICK

PANEL.
FINISH: CLEAR ANODIZED

HARDWARE:
TOP & BOTTOM SLIDING TRACK, WEATHERSTRIPPING
DEADBOLT LOCK (INSIDE FACE ONLY)
PULL HANDLES INSIDE & OUT

## DOORS SCHEDULE

SCALE: 1:40

0m 1m 2m 3m 4m 5m

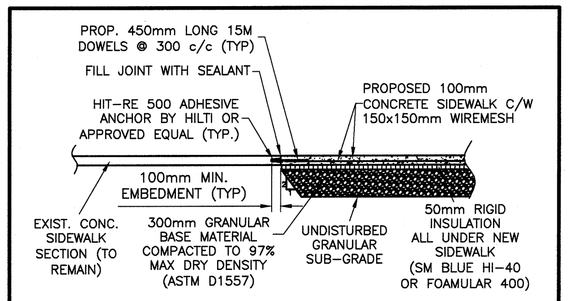


## TYPICAL SIDEWALK DETAIL

SCALE: 1:40

0m 1m 2m 3m 4m 5m

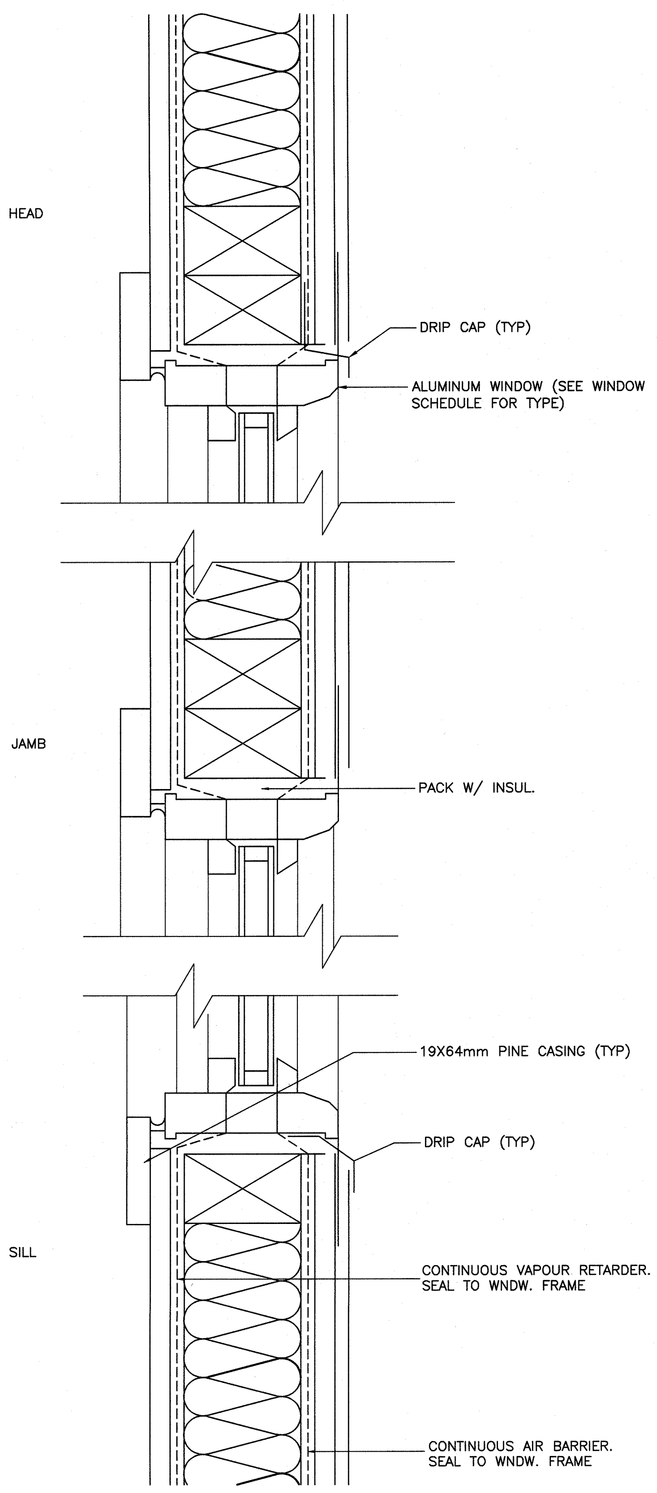


## TYPICAL WINDOW DETAIL

SCALE : 1:2

0mm 20 40 60 80 100 120 140 160 180 200mm

Public Works and Government Services Canada / Travaux Publics et Services gouvernementaux Canada

ROY CONSULTANTS
546, av. King Ave.
Bathurst (NB) E2A 1P7
T. 506.546.4484
www.royconsultants.ca

ROY# 293-14-A4

REGISTERED PROFESSIONAL ENGINEER
Province of New Brunswick
M7161
Robert A. Roy
Sept 29, 2014
Province du Nouveau-Brunswick
INGÉNIEUR INSCRIT

| revisions | | date |
|---|---|---|
| 2 | RE-ISSUED FOR TENDER | SEPT 29 2014 |
| 1 | RE-ISSUED FOR TENDER | SEPT 22 2014 |
| 0 | ISSUED FOR TENDER | SEPT 17 2014 |

project / projet

**EDMUNDSTON BORDER CROSSING PIL BOOTH 1 & 2 MODIFICATION**

MADAWASKA, NEW-BRUNSWICK

drawing / dessin

**- ARCHITECTURAL - DETAILS**

designed / conçu: R.ROY
date: SEPT. 2014
drawn / dessiné: Y. DUBE
date: SEPT. 2014
approved / approuvé
date
Tender / Soumission
PWGSC Project Manager / Administrateur de projets TPSGC
project number / no. du projet: R 071714.001
drawing no. / no. du dessin: A4

PWGSC B1 (2004)

E-DRM/GDD-E: 495538