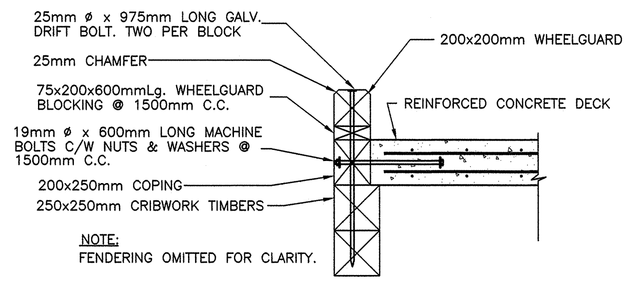

NOTE:
FENDERING OMITTED FOR CLARITY.

WHEELGUARD AND COPING DETAIL (1 / 4 7)

SCALE : 1:20

0mm 500mm 1000mm 1500mm 2000mm 2500mm

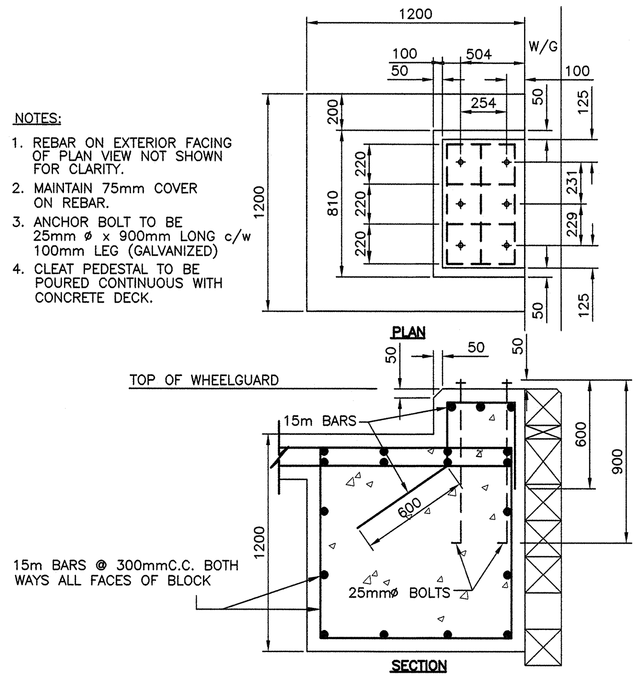

NOTES:

1. REBAR ON EXTERIOR FACING OF PLAN VIEW NOT SHOWN FOR CLARITY.
2. MAINTAIN 75mm COVER ON REBAR.
3. ANCHOR BOLT TO BE 25mm ø x 900mm LONG c/w 100mm LEG (GALVANIZED)
4. CLEAT PEDESTAL TO BE POURED CONTINUOUS WITH CONCRETE DECK.

TYPE "A" CLEAT BLOCK DETAIL (4 / 4 7)

SCALE : 1:20

0mm 500mm 1000mm 1500mm 2000mm 2500mm

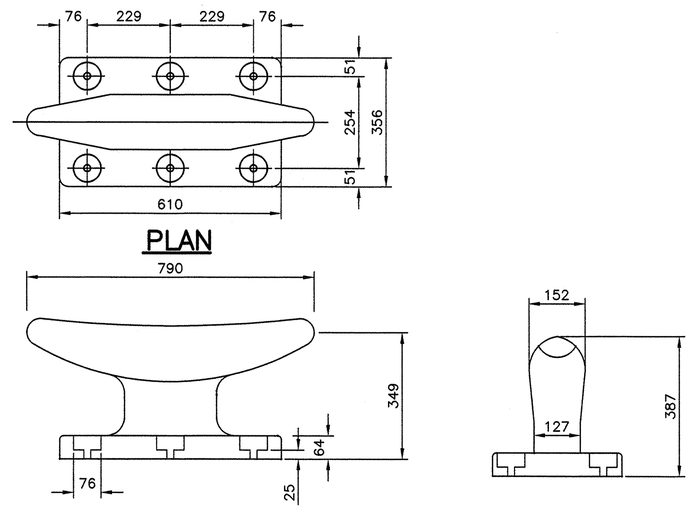

TYPE "A" CLEAT (8 / 4 7)

SCALE: 1:10

0mm 100 200 300 400 500 600 700 800 900 1000mm

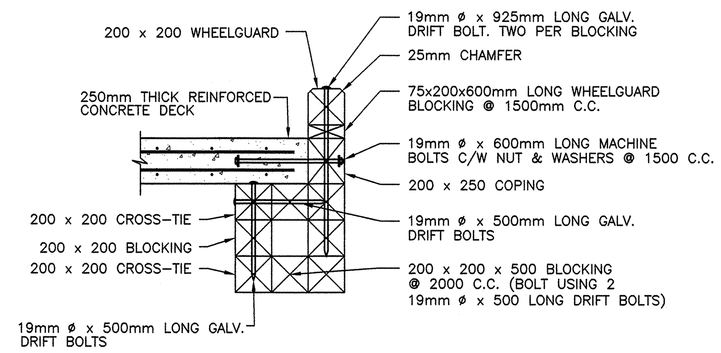

END OF WHARF BLOCKING DETAIL (11 / 4 7)

SCALE : 1:20

0mm 500mm 1000mm 1500mm 2000mm 2500mm

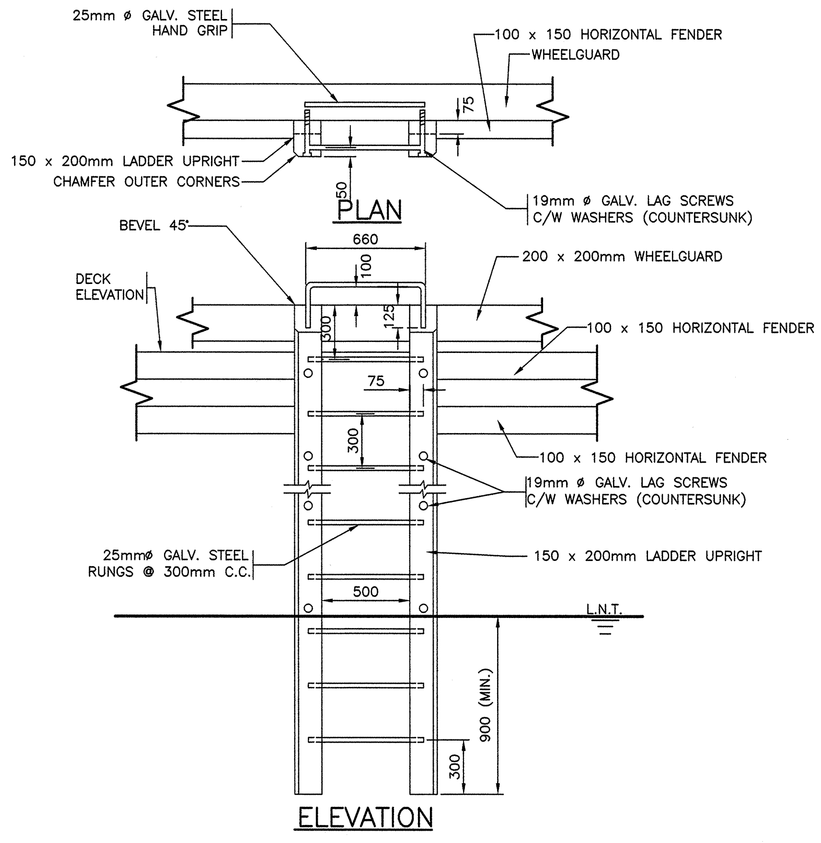

LADDER DETAIL (2 / 4 7)

SCALE : 1:20

0mm 500mm 1000mm 1500mm 2000mm 2500mm

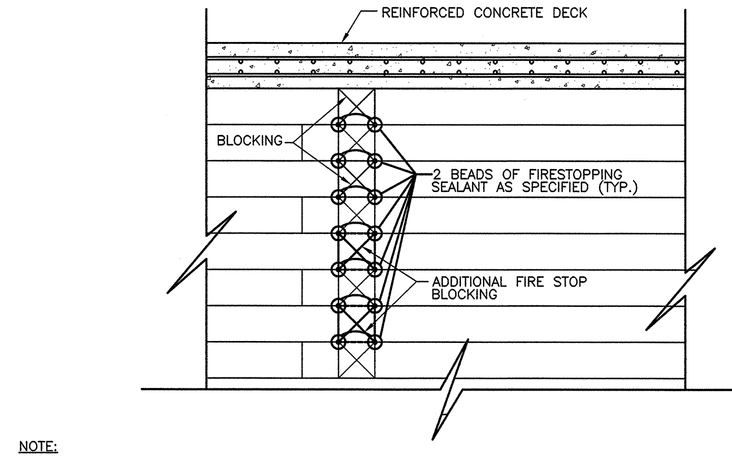

NOTE:

1. 2 BEADS OF SILICONE FIRESTOPPING SEALANT ARE TO BE PLACED BETWEEN EACH TIMBER JOINT FOR THE FULL WIDTH & HEIGHT OF THE FIRE SEPARATOR AS SPECIFIED. SEALANT TO BE SUITED FOR USE ON WOOD IN A WET ENVIRONMENT WITH 4 HOUR FIRE RATING.

FIRE SEPARATOR (5 / 4 7)

SCALE : 1:20

0mm 500mm 1000mm 1500mm 2000mm 2500mm

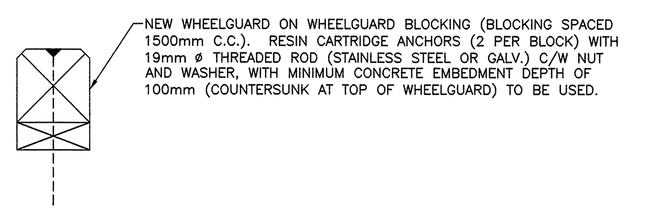

NEW WHEELGUARD ATTACHMENT ON FORMER PROVINCIAL FERRY WHARF (9 / 4 7)

SCALE: 1:10

0mm 100 200 300 400 500 600 700 800 900 1000mm

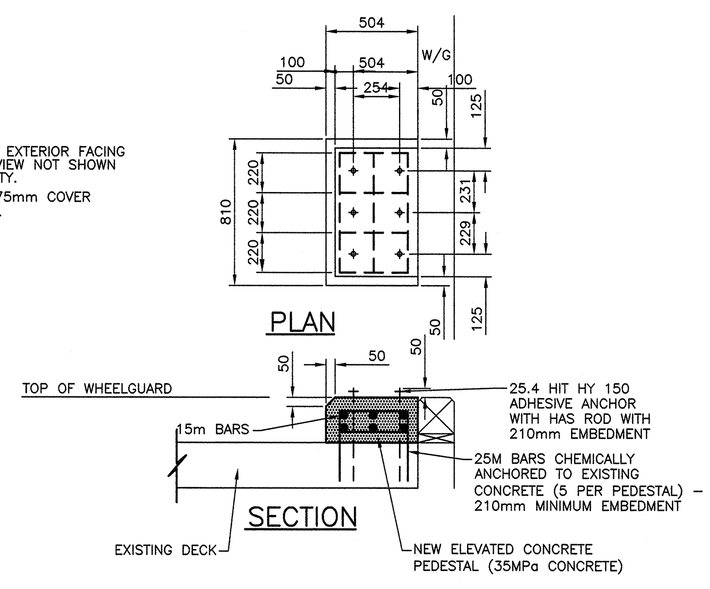

NOTES:

1. REBAR ON EXTERIOR FACING OF PLAN VIEW NOT SHOWN FOR CLARITY.
2. MAINTAIN 75mm COVER ON REBAR.

NEW TYPE 'A' CLEAT ON EXISTING FORMER PROVINCIAL FERRY WHARF (10 / 4 7)

SCALE : 1:20

0mm 500mm 1000mm 1500mm 2000mm 2500mm

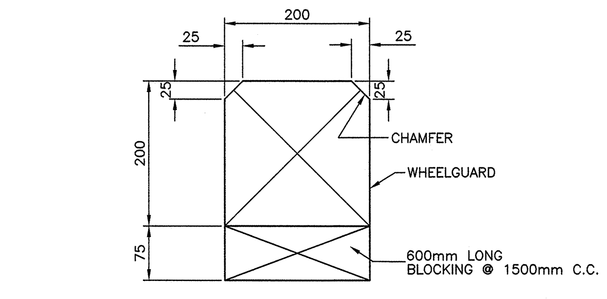

WHEELGUARD SECTION (3 / 4 7)

SCALE: 1:5

0mm 100mm 200mm 300mm 400mm 500mm

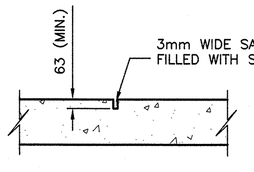

TYP. CONTROL JOINT DETAIL (6 / 4 7)

SCALE : 1:20

0mm 500mm 1000mm 1500mm 2000mm 2500mm

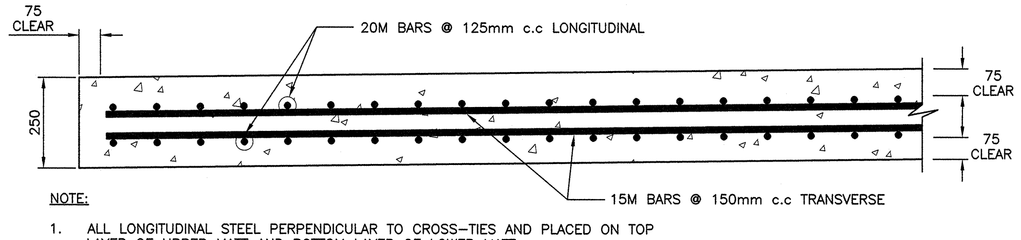

NOTE:

1. ALL LONGITUDINAL STEEL PERPENDICULAR TO CROSS-TIES AND PLACED ON TOP LAYER OF UPPER MATT AND BOTTOM LAYER OF LOWER MATT.

REINFORCED CONCRETE DECK (7 / 4 7)

SCALE: N.T.S.

Public Works and Government Services Canada / Travaux Publics et Services gouvernementaux Canada

PROVINCE OF NEWFOUNDLAND
PERMIT HOLDER
This Permit Allows
AFN ENGINEERING INC.
To practice Professional Engineering in Newfoundland and Labrador.
Permit No. as issued by APEGNL F0292
which is valid for the year 2014.

STAMP: REGISTERED PROFESSIONAL ENGINEER — NEIL C. HUNT — NEWFOUNDLAND & LABRADOR
SIGNATURE
DATE Oct. 14/14

revisions		date
C	ISSUED FOR TENDER	07/10/14
B	ISSUED FOR 66% REVIEW	24/09/14
A	ISSUED FOR 33% REVIEW	13/08/14

project / projet
HARBOUR DEVELOPMENT PHASE II

MARY'S HARBOUR, LABRADOR

drawing / dessin
DETAILS – SHEET 1

designed / conçu: N.H.
date: SEPTEMBER 24, 2014
drawn / dessiné: P.H.
date: SEPTEMBER 24, 2014
approved / approuvé
date
Tender / Soumission
PWGSC Project Manager / Administrateur de projets TPSGC — 10 Oct 2014
project number / no. du projet: R.071733.001
drawing no. / no. du dessin: C7

PWGSC B1 (2004)

E-DRM/GDD-E: #498746