NOTE:
CONTRACTOR TO VERIFY ALL DIMENSIONS IN FIELD PRIOR TO FABRICATION TO ENSURE CONFORMITY WITH CRIBS, FLOAT WHARVES, & WALKWAYS

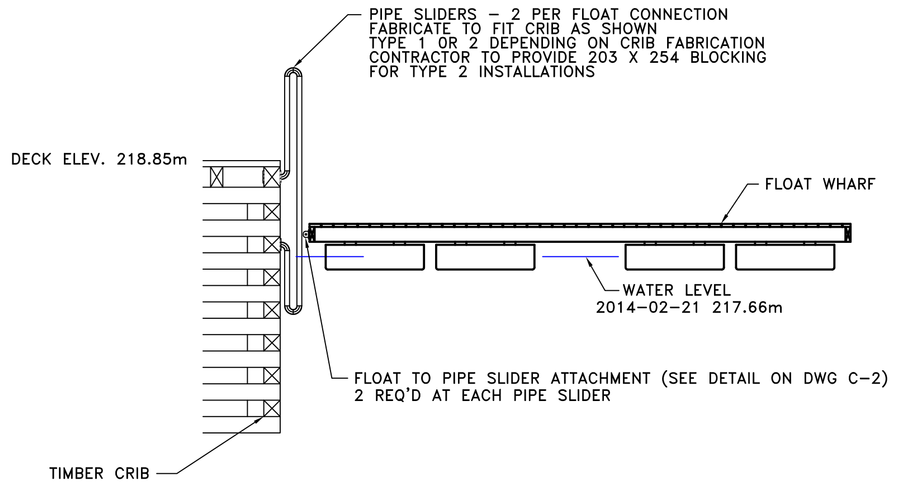

HARBOUR FLOAT TO CRIB CONNECTION
SCALE: 1:50

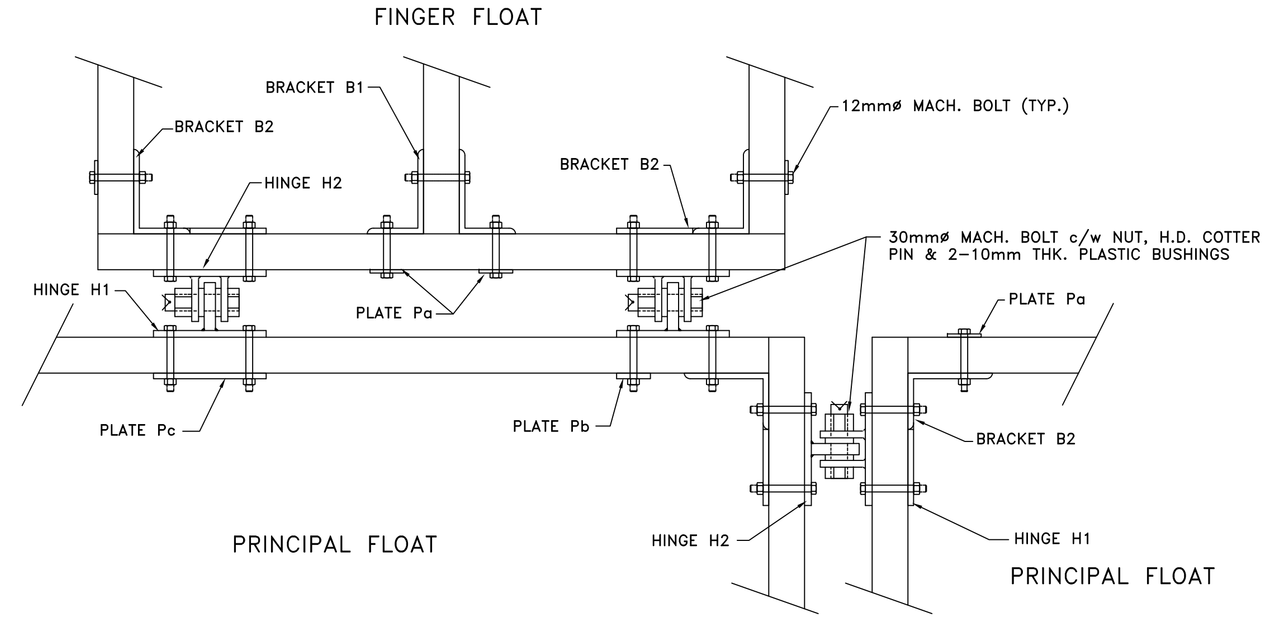

FLOAT CONNECTION DETAIL
SCALE: 1:7.5

NOTE:
ALL STEEL HARDWARE TO BE COATED WITH 2 COATS OF RED SHOP PRIMER

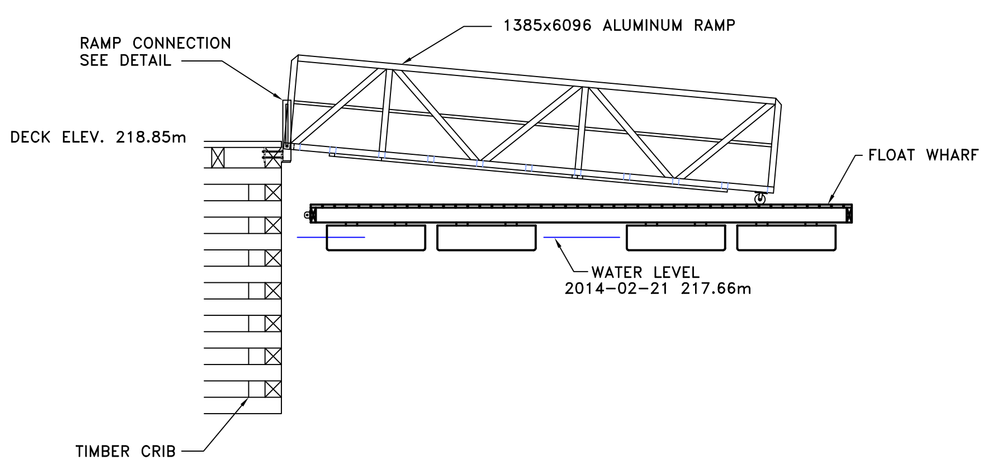

HARBOUR RAMP TO CRIB CONNECTION
SCALE: 1:50

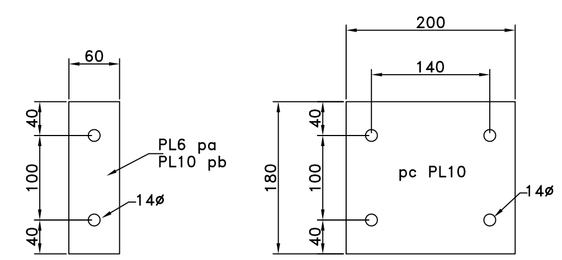

PLATE WASHERS
SCALE: 1:5

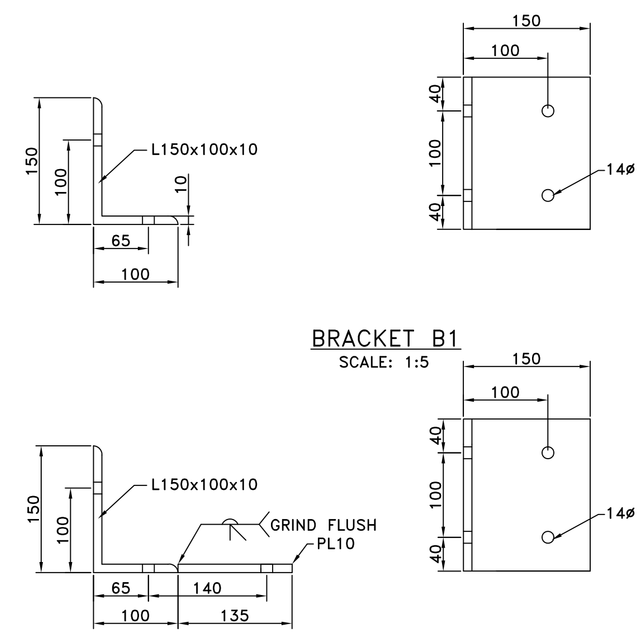

BRACKET B1
SCALE: 1:5

BRACKET B2
SCALE: 1:5

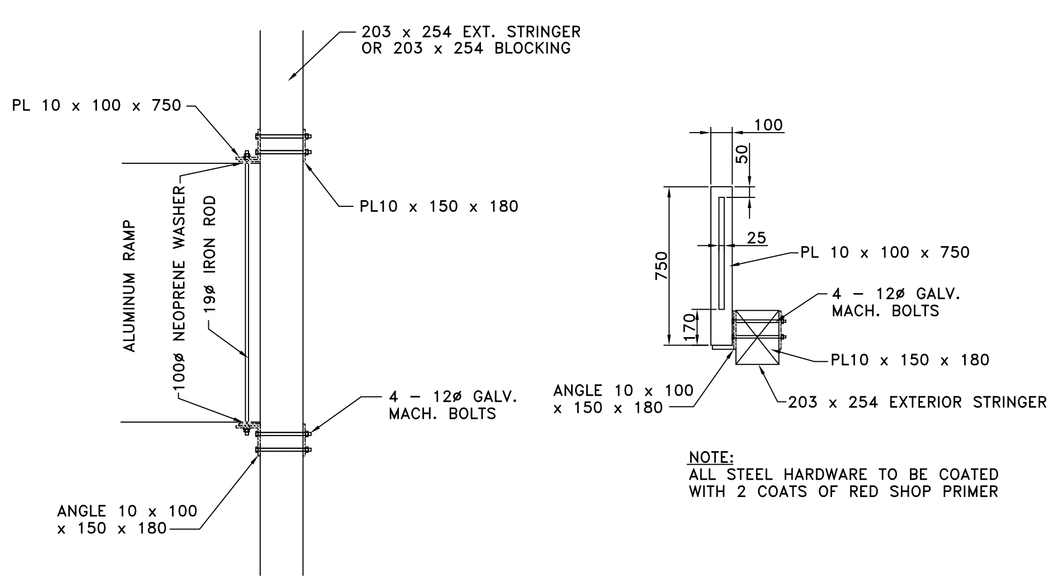

NOTE:
ALL STEEL HARDWARE TO BE COATED WITH 2 COATS OF RED SHOP PRIMER

RAMP CONNECTION DETAILS
SCALE: 1:20

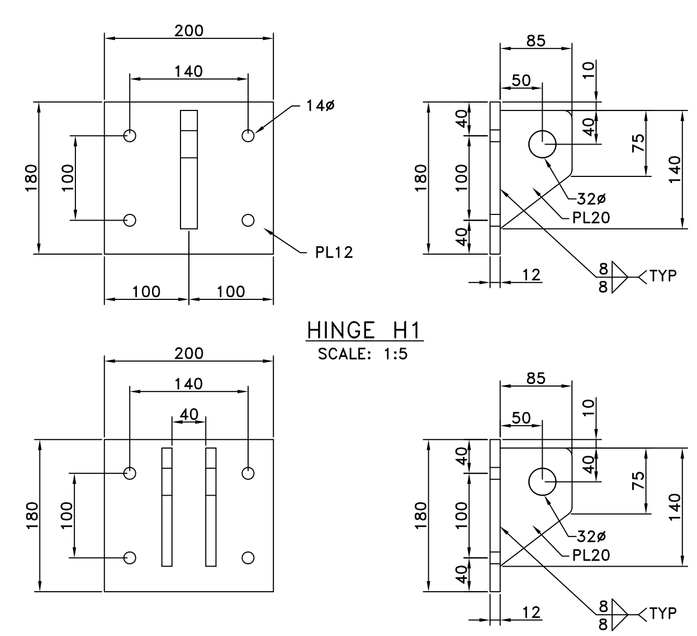

HINGE H1
SCALE: 1:5

NOTE:
HINGE H2 c/w 30 mmø MACH. BOLT, NUT H.D.
COTTER PIN AND 2 – 10mm THK. PLASTIC BUSHINGS

HINGE H2
SCALE: 1:5

GOVERNMENT OF CANADA / GOUVERNEMENT DU CANADA
FISHERIES AND OCEANS / PÊCHES ET OCÉANS

SMALL CRAFT HARBOURS
CENTRAL AND ARCTIC REGION

NOTES:

1. ALL DIMENSIONS ARE IN MILLIMETRES UNLESS OTHERWISE STATED
2. ELEVATIONS SHOWN ARE IN METRES
3. ALL CRIB TIMBERS TO BE ROUGH SAWN
4. CRIB DECKING TO BE ROUGH SAWN SIZED
5. TIMBER FOR FLOAT WHARVES TO BE S4S
6. ALL WELDS TO BE 6mm CONTINUOUS FILLET WELDS UNLESS OTHERWISE NOTED
7. PROVIDE ENGINEER WITH 48 HOURS NOTICE INSTALLING CRIBS OR BACKFILLING
8. CONTRACTOR TO SUPPLY 1 NEW FLOAT WHARF (SEE DRAWING C–5) AT PACKING PLANT SITE INSTALL AS DETAILED ON DRAWING C–4
9. ALL ALUMINUM RAMPS AND FLOAT WHARVES TO BE INSTALLED IN AT HARBOUR SITE ARE STORED AT THE HARBOUR SITE – INSTALL AS DETAILED ON DRAWING C–3
   CONTRACTOR TO SUPPLY ANY ADDITIONAL HINGES AND HARDWARE REQUIRED TO COMPLETE INSTALLATION OF FLOATS AND RAMPS AS SHOWN
10. ALUMINUM RAMP TO BE INSTALLED AT PACKING PLANT SITE IS STORED AT HARBOUR SITE
11. CONTRACTOR TO TRANSPORT 1 – 1829 x 4877 AND 2 – 1219 x 4877 FLOATS TO CANADIAN COAST GUARD YARD IN SELKIRK, MB
    CONTRACTOR WILL BE RESPONSIBLE FOR OFF LOADING FLOATS IN SELKIRK
12. CONTRACTOR TO ENSURE SOURCE OF ROCK MATERIAL HAS BEEN IDENTIFIED PRIOR TO SUBMISSION OF TENDER, INCLUDING TIMELINES FOR PERMITTING

REVISIONS:		DATE:
0	ISSUED FOR TENDER	SEPT. 24, 2014

SCALE:	CLASS:
AS SHOWN	

PROJECT:
BREAKWATER REPAIRS

DESCRIPTION:
CONSTRUCTION DETAILS

DRAWN:	APPROVED:
SCH	SCH
DATE: SEPTEMBER 2014	DATE: SEPTEMBER 2014

LOCATION:
PINE DOCK
MANITOBA

DRAWING NO.:	LOCATOR CODE:
C–3 of 5	5537