Federal Signal SelecTone®
Audible Signalling Device
Model 50GC

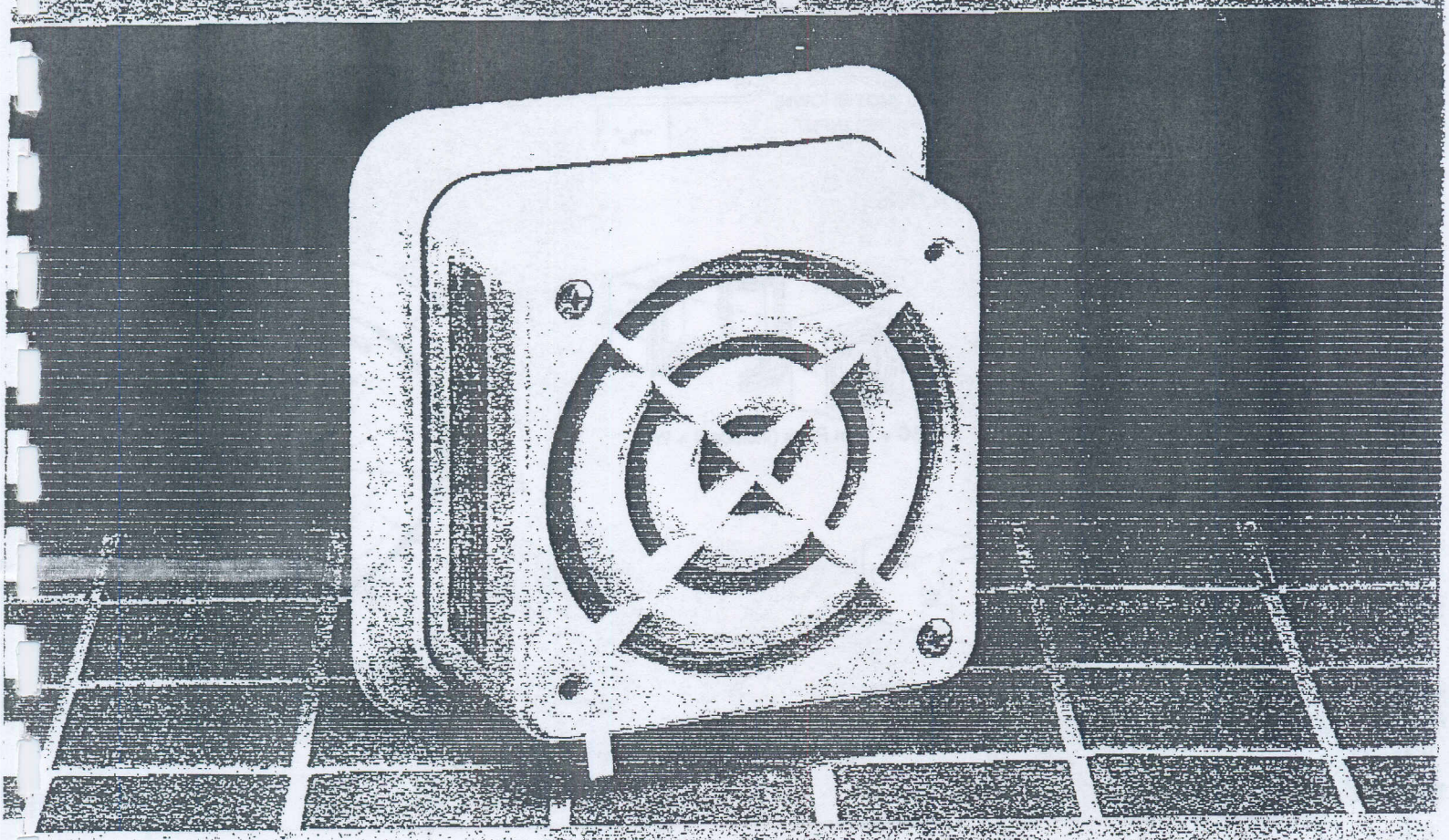

Designed for indoor/outdoor use

- Built-in gain control allows volume adjustment from 64dBA to 88dBA at 10'
- Reliable, solid-state circuitry
- UL (Underwriters Laboratories) listed
- CSFM (California State Fire Marshal) approved
- CSA (Canadian Standards Association) approved

The Federal Signal Model 50GC SelecTone is capable of reproducing crisp, clear tone signals and highly intelligible voice messages. Its UL (Underwriters Laboratories) listed and CSA (Canadian Standards Association) approved, flame retardant, thermoplastic housing provides excellent durability. A short, folded re-entrant horn is interposed between the diaphragm and surrounding air space for greater efficiency and frequency response. Units are available in beige.

The Model 50GC operates [illegible] or 120VAC power and [illegible] single audible device [illegible] of the many different tone modules. It can also be used as part of a system when used in conjunction with SelecTone Command Units 300VSC, 300SSC [illegible] 300SSC. Reliable, solid-state circuitry helps assure long, continuous life. Mounting available in either flush or surface installations. The internal gain control allows tone output adjustment from 64dBA to a maximum of 88dBA at 10 feet.

The compact size and attractive appearance of the Model 50GC make it ideal for use in offices, hallways, plant areas, or anywhere ambient noise levels are not exceedingly high, or where more even sound dispersal is desired. Emergency signalling or paging are common applications. [illegible] several distinct tone signals [illegible] modules.

Model 50GC

FEDERAL SIGNAL CORPORATION

161

FEDERAL SIGNAL CORPORATION
Signal Division/Electrical Products Group
2645 Federal Signal Drive, University Park, Illinois 60466-3195 Phone: (708) 534-3400

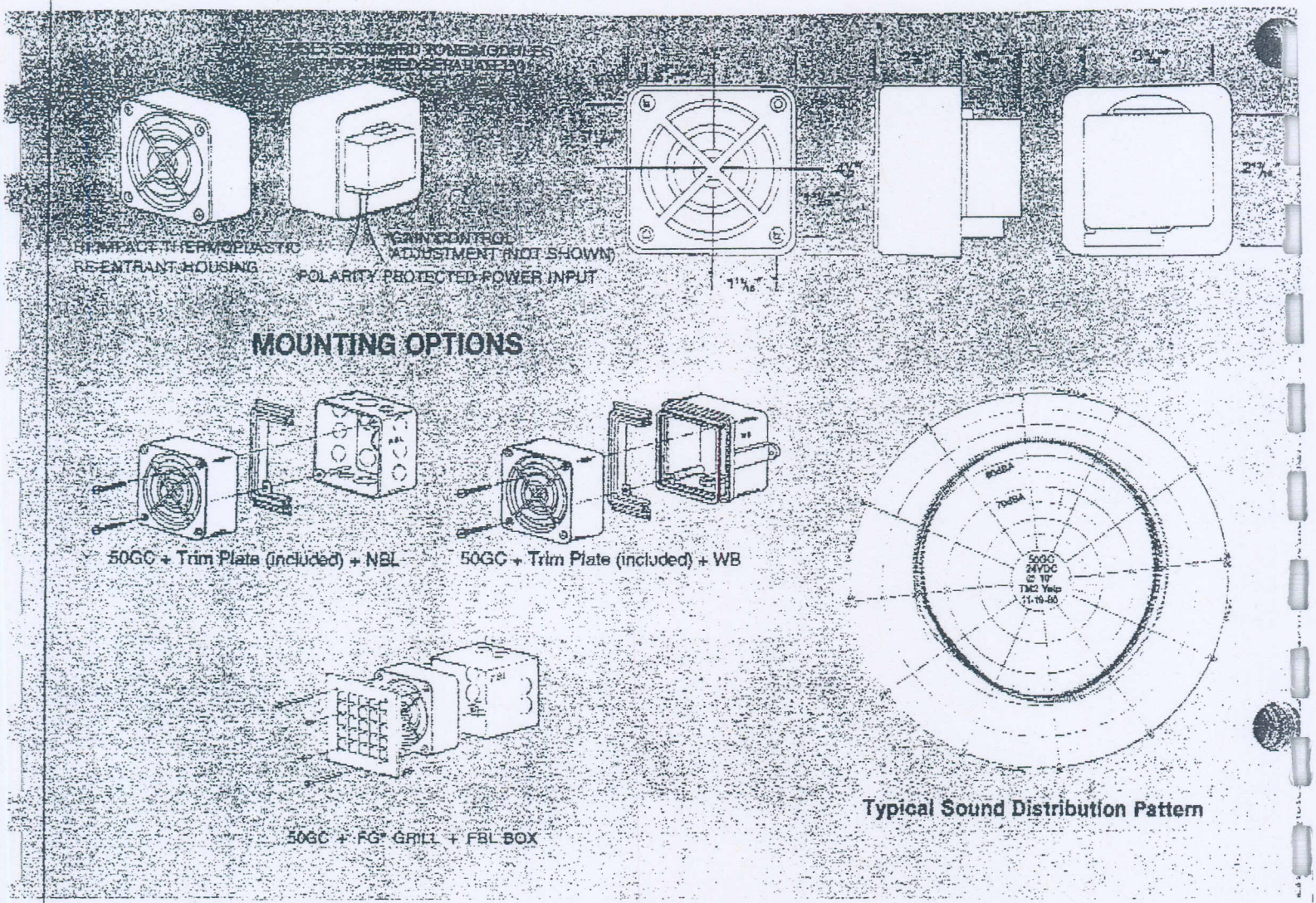

Model	Voltage	Operating Current	Stand-by Current	Decibels at 10'
50GC	24VDC	.07	.025	88
	24VAC 50/60 Hz	.22	.095	88
50GC	120VAC 50/60 Hz	.033	.027	88

Specifications:

Operating Temperature:	-31°F to 161°F
Net Weight:	1.7 lbs.
Shipping Weight:	2.2 lbs.
Depth:	3-7/16"
Width:	4-1/2"
Height:	4-1/2"

How to order:

1. Model
2. Voltage
3. Tone Module
   a. TM1 Wail, TM2 Yelp, TM3 Hi Lo, etc. Refer to Bulletin PB • TONE MOD (pages 48 - 49).
   b. 300CK, purchased separately, for non-supervised system. 300CKS, purchased separately for supervised system.
4. Mounting Accessories i.e. WB, NBL and TP.

Model 301

Federal Signals

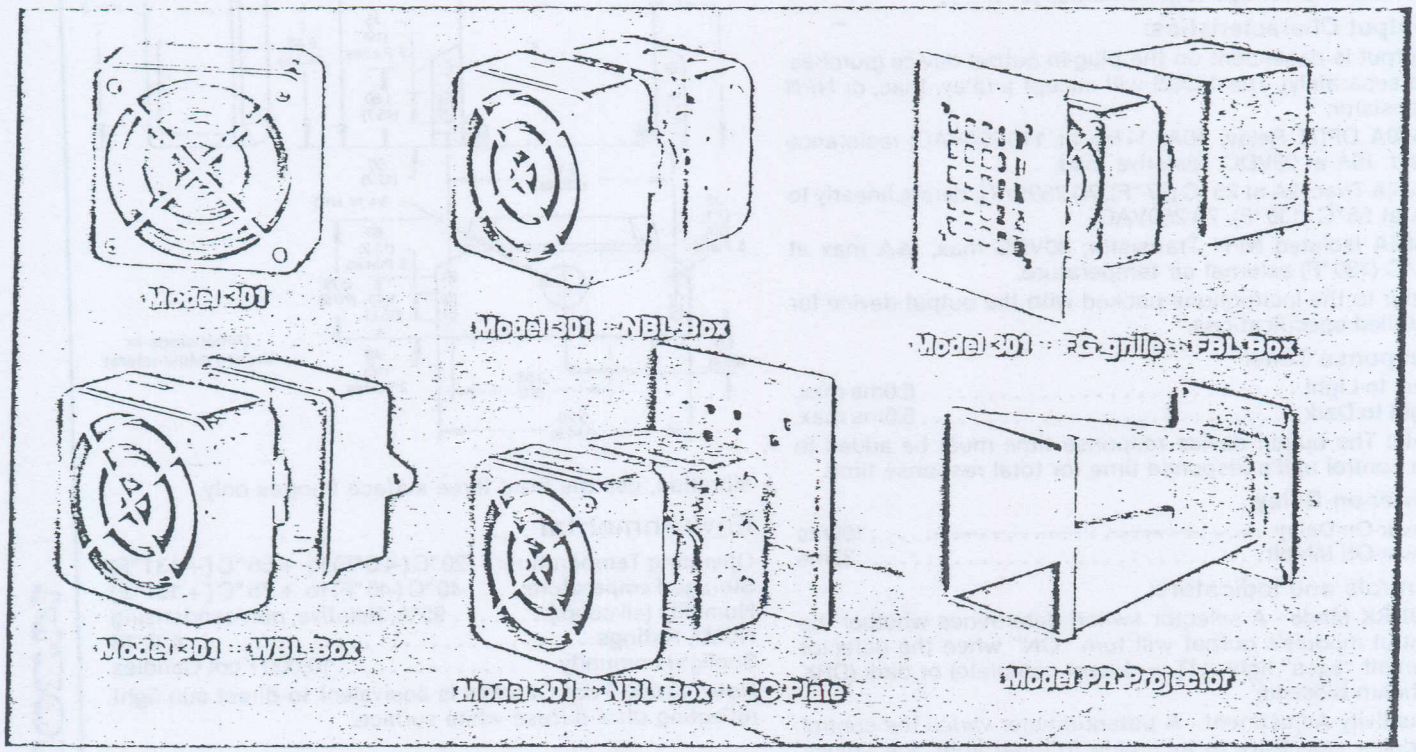

Model 301

Sound Characteristics

Acoustic power is similar for all tones. Slight variations in sound level will occur depending upon the frequency of the selected tones.

Maximum Noise Level Penetration

Each tone module (except SM-6), contains built-in automatic controls to modulate the tone. No additional controls are necessary. Tones that are modulated provide maximum penetration through ambient noise.

This compact model is UL approved for use on 24 or 120 VAC on 6-12, or 24 VDC. It is of die-cast aluminum alloy finished in gray hammertone enamel. A built-in volume control is included for situations where the full sound output is not required.

Choice of Tones

Select from the following tones for your particular application:

MODEL 301

SM-1	Wail	(conventional siren)
SM-2	Yelp	(rapid siren)
SM-3	Hi-Lo	(alternating High and Low)
SM-5	Yeow	(descending High to Low-repeated)
SM-6	Horn	(steady)
SM-7	Beep	(slow intermittent horn)
SM-8	Stutter	(rapid intermittent horn)
SM-9*	Slow Whoop	(ascending Low to High-repeated)

*The slow whoop signal has been proposed as the universal standard fire alarm alerting signal and we strongly recommend that it be used only for this purpose.

Mounting

It can be mounted on any relatively flat surface or on a variety of electrical wall boxes. If no outlet box is available, you may order one of the following:

Interior Surface Mount Model 301 + NBL box	Exterior Weatherproof Mount Model 301 + WBL box
Interior Flush Mount Model 301 + FG grille + FBL box	Concealed Conduit Mounting Model 301 + NBL box + CC plate

For added output and directionality, a single projector (PR) or a double projector (PR2) may be ordered.

Maximum Current Draw – WBL Box

Model 301

AC	DC
24V. 230 MA 120V. 600 MA	6-12V. 820 MA 24V. 200 MA

2 HORNS

Self Contained Series Installation Instructions

Reflex Control Unit
1420B

Specifications

Electrical

Input Power:

1420B-6501 ..... 95-130VRMS, 13VA max., 50/60Hz.
1420B-6502 ..... 190-260VRMS, 13VA max., 50/60Hz.

Note: Refer to the label on the Control Unit for the model number and voltage requirements.

Output Characteristics:

Output is dependent on the plug-in output device (purchased separately). The 1420B will accept a relay, triac, or NPN transistor.

8530A DPDT Relay; 10A, ¼ Hp at 110/220VAC, resistance load; 10A at 28VDC, resistive load.

8572A Triac; 2A at 25 °C (77 °F), 70-250VAC; derate linearly to 1A at 55 °C (130 °F), 70-250VAC.

8586A Isolated NPN Transistor; 30VDC max, ½A max at 55 °C (130 °F) external air temperature.

Refer to the instructions packed with the output device for detailed specifications.

Response Time:

Dark to Light ..... 6.0ms max.
Light to Dark ..... 5.0ms max.

Note: The output device response time must be added to the control unit's response time for total response time.

Power-on Delay:

Power-On Delay 100ms
Power-Off Inhibit 33ms

Controls and Indicators:

LIT/DRK Mode - A selector switch determines whether the control module's output will turn "ON" when the detector element "sees" light (LIT = beam complete) or dark (DRK = beam blocked).

Sensitivity Adjustment - A potentiometer varies the control modules sensitivity to incoming infrared light; the adjustment range is 20 to 1. At minimum sensitivity, a proportionally greater amount of infrared light, received at the detector, is required to turn the output "ON".

Beam Status Indicator - An indicator light, visible through the case cover, glows red whenever the beam is complete, i.e., the detector sees infrared light from the source.

Special Function Modules: (Purchased Separately)

8212B Time Delay; delay period adjustable from .01 to 35 seconds in four ranges.

8213B One-Shot; adjustable pulse width from .02 to 30 seconds in four ranges.

8216A Stopped Motion Detector; responds to a drop in pulses per minute below a user selected minimum.

Mechanical

Lens ..... Acrylic Plastic
Replacement Kit: Model 1320B-7501
Case ..... Cast Aluminum
Terminals ..... Eight Position Barrier Strip
Weight ..... appx. 5 lbs. (2.3 kg) with relay
Vibration -10G or .06 inch displacement, whichever is less, over a frequency range of 10Hz to 2000Hz.

Note: The aluminum case comes with five mounting flanges drilled and slotted for ¼ in. (6mm) hardware; any two are considered minimum adequate mounting. In areas of high vibration, use the front three surface flanges only.

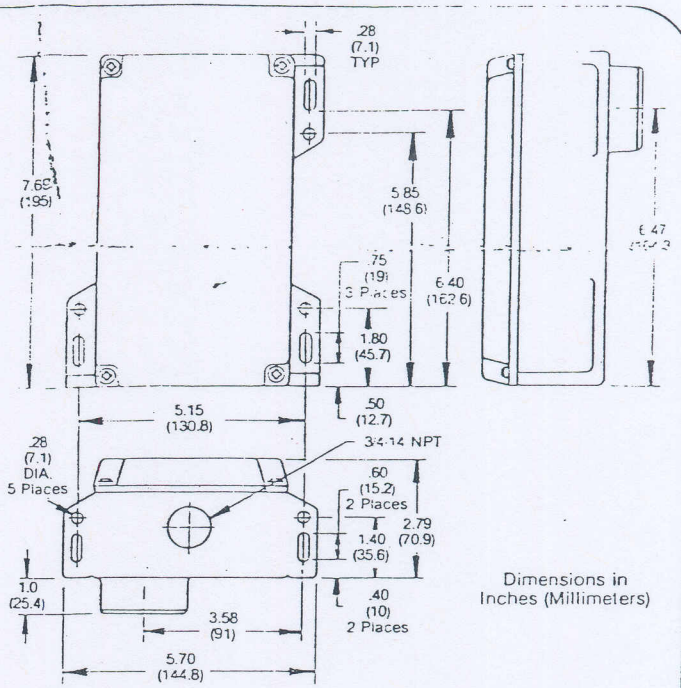

Environmental

Operating Temperature: -20 °C (-4.0 °F) to +55 °C (+131 °F)
Storage Temperature: -40 °C (-40 °F) to +75 °C (+167 °F)
Humidity (all cond.): ..... 95%, Relative, non-condensing
NEMA Ratings 4, 6, 13
Sunlight Immunity ..... 10,000 Foot Candles

Note: 10,000 Foot Candles is equivalent to direct sun light reflecting off a diffuse white surface.

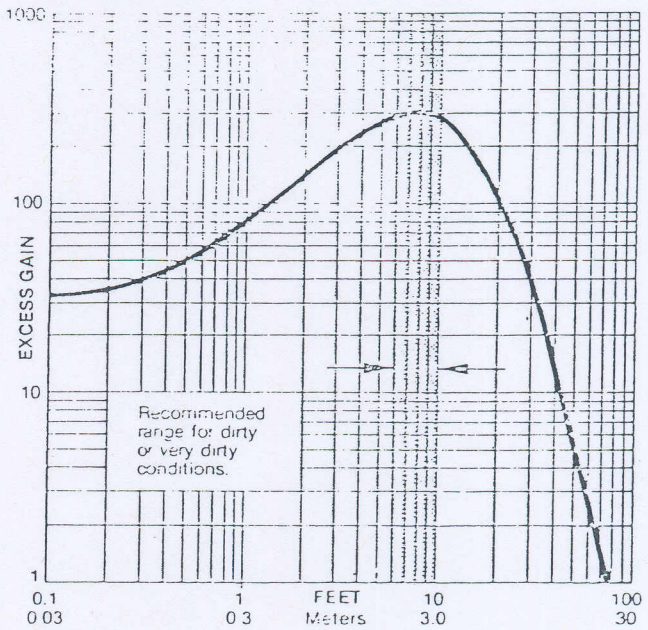

1420B Reflex Performance with 3 in. Reflector

1420B Reflex Control Unit

1420B Installation

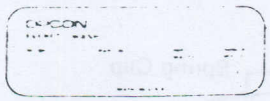

Check the label on the case side for the required line voltage and make the connections on the AC input terminmals.

The label inside the cover lists all reqired wiring connections for the available output devices.

OPCON®

WARNING

For all weather operation
Conduit fitting must be tightly seated
Cover gasket must be clean and in place
Torque cover screws at 24 IN. LB. max

INPUT POWER

See label on outside of case for model no. and power requirements

Power	Terminal Connections
AC	2 O—— VAC ——O 3
DC	(+) 2 O—— VDC ——O 3 (−) DC unit special order only

Output Device	Terminal Connections
Model 8530A DPDT Relay 10A 1/4HP at 110/220VAC 10A at 28VDC	6 4 5 8 9 7 SAME POLARITY
Model 8572A SPST Triac* 2A at 25°C 1A at 55°C 70 to 250 VAC Min load 10ma	5 4
Model 8586A Isolated NPN Transistor 30VDC max ½ A max at 55°C external air temp	4 5 8 9 + VDC If > 6.5V see manual

* Not UL approved

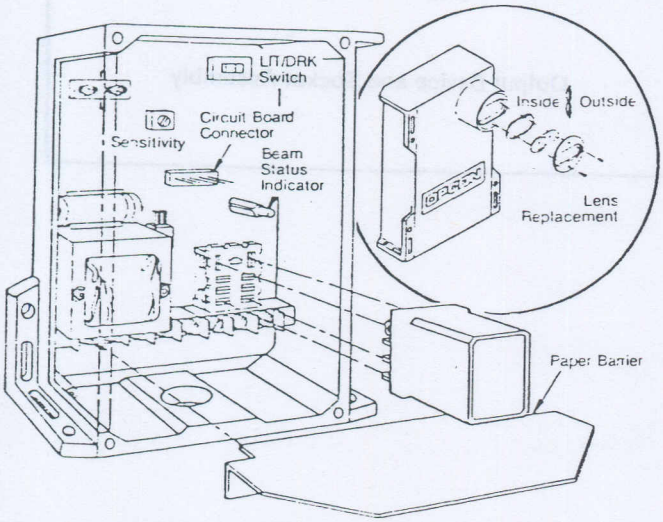

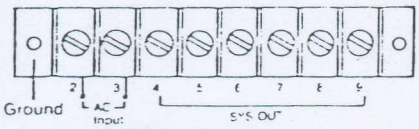

Terminal Block Detail

Typical Reflex System

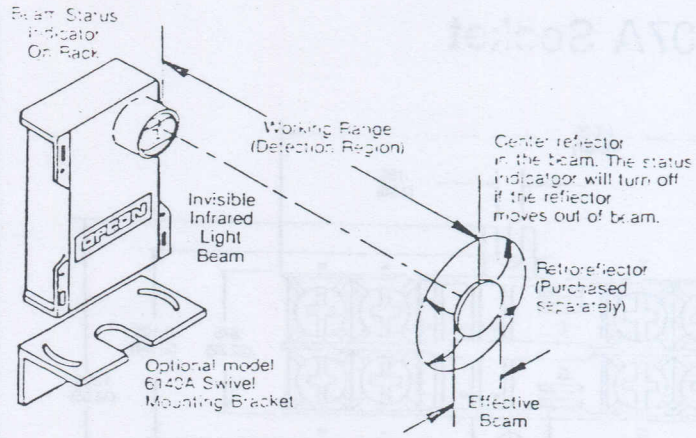

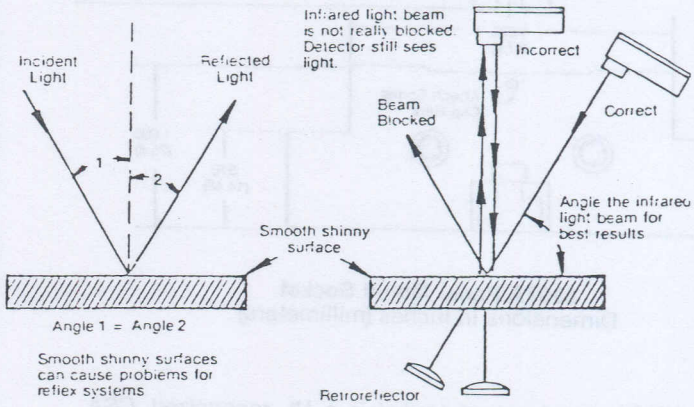

Reflex System Set-up

The 1420B Reflex Control Unit operates by generating a beam of infrared light between itself and a distant retroreflector. A break in the infrared light beam results in an on-off control action provided through the plug-in output device. The maximum range at which the Control Unit will detect infrared light returning from the retroreflector depends primarily on the size of the reflector. Other factors which affect the range are contaminants such as dust or steam in the air and dirt on the Control Unit's lens and/or retroreflector. In general, try to pick a working range at or near the peak Excess Gain shown in the Specifications. Excess Gain is equal to one at maximum range and increases with decreasing range. High Excess Gain for a given range indicates that reserve power is available to overcome the effects of dirt and contamination.

Guarantee/ Service

Opcon guarantees all standard products, except output devices, for one year against electrical and mechanical defects in material and workmanship. Repair or replacement will be made free of charge during this period. This guarantee does not cover damage caused by misuse, negligence, or use on current or voltage other than that specified, nor does this guarantee cover damage or liability for improper application of Opcon products. This guarantee is in lieu of any other warranty either expressed or implied.

If service is required, package the unit carefully since damage in transit is not covered by the guarantee. Include a letter describing the problem and designating a contact person in case Opcon has a question concerning the repair. Send the unit, prepaid, along with a purchase order to an authorized Opcon repair center. Contact Opcon for the repair center nearest you.

Information furnished by Opcon, Inc., is believed to be accurate and reliable. However, no responsibility is assumed by Opcon, Inc., for its use, nor for any infringements of patents or other rights of third parties which may result from its use. No license is granted by implication or otherwise under any patent or patent rights of Opcon, Inc.

opcon®
sensing your needs

720 80th St. S.W., Everett, WA 98203-6299
Toll Free [800] 426-9814 or [206] 353-0900, or TLX 152-963

104664 1181(2K) Printed in U.S.A.

8907A Socket

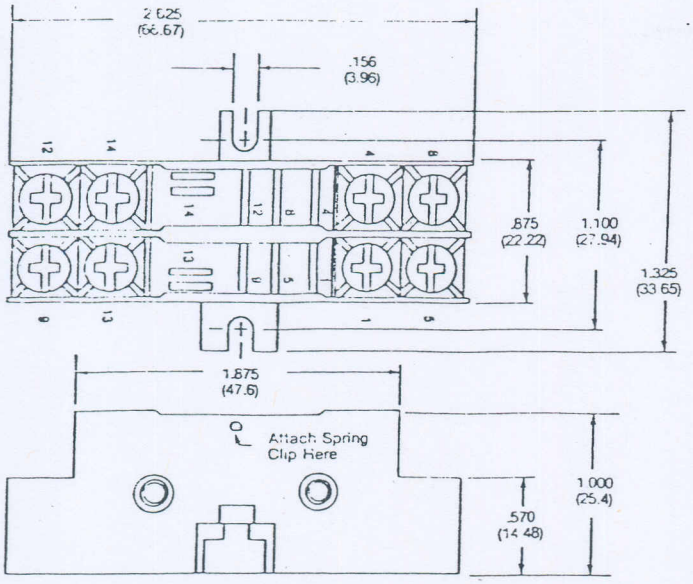

8907A Panel Mount Socket
Dimensions in inches (millimeters)

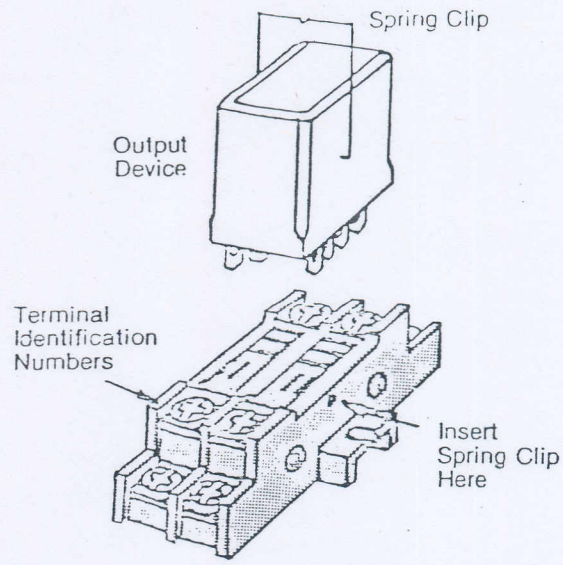

Output Device and Socket Assembly

The 8907A panel mount socket is a UL recognized, CSA approved fixture, recommended for use with Opcon's plug-in output devices. The output device pins are mechanically connected to screw terminals equipped with captive wire clamps. No lug connections are required. Terminal identification numbers are molded into the plastic barriers on the socket.

Allow sufficient clearance around the 8907A mounting site to manipulate and attach the required wiring (.22 gauge wire is the minimum size for reliable connections). If several modules are to be mounted in line, the space between the mounting sockets is preset by the interlocking ears molded into the side of each socket. Secure the socket with #6 (3.5m) hardware (not included); hole spacing is shown in the dimensional drawing. A spring clip is provided to secure the output device in the socket.

1281 (6K) 103049
Printed in U.S.A.

Guarantee/Service

Opcon guarantees all standard products, except output devices, for one year against electrical and mechanical defects in material and workmanship. Repair or replacement will be made free of charge during this period. This guarantee does not cover damage caused by misuse, negligence, or use on current or voltage other than that specified, nor does this guarantee cover damage or liability for improper application of Opcon products. This guarantee is in lieu of any other warranty either expressed or implied.

If service is required, package the unit carefully since damage in transit is not covered by the guarantee. Include a letter describing the problem and designating a contact person in case Opcon has a question concerning the repair. Send the unit, prepaid, along with a purchase order to an authorized Opcon repair center. Contact Opcon for the repair center nearest you.

Information furnished by Opcon, Inc., is believed to be accurate and reliable. However, no responsibility is assumed by Opcon, Inc., for its use, nor for any infringements of patents or other rights of third parties which may result from its use. No license is granted by implication or otherwise under any patent or patent rights of Opcon, Inc.

opcon®
sensing your needs

720 80th St. S.W., Everett, WA 98203-6299
Toll Free [800] 426-9814 or [206] 353-0900, or TLX 152-963

Relay & Socket Installation Instructions

8530A Relay
8907A Socket

8530A Relay

Specifications:

The 8530A is a double-pole, double-throw (DPDT), plug-in, industrial relay. This relay is UL listed and CSA certified when used according to specification.

Contact Ratings:

10A, ¼ HP max. at 110/220VAC, resistive load; 7A max at 110/220VAC, inductive load.
10A max. at 28VDC, resistive load; 7A max. at 28VDC, inductive load.

Coil Ratings:

12VDC nominal operating voltage, 13.2VDC maximum sustained coil voltage.

Pull-in voltage: ..... 8.0V to 9.6V
Drop-out voltage: ..... 1.2V to 2.0V
Coil current: ..... 75ma at 77 °F (25 °C), 12VDC

Frequency of Response:

1800 operations/hr, max.

Response Time:

Pull-in: ..... 25ms max.
Drop-out: ..... 25ms max.

Mechanical:

Contacts will withstand at least 500,000 operations at rated load.
Enclosure is transparent polycarbonate.

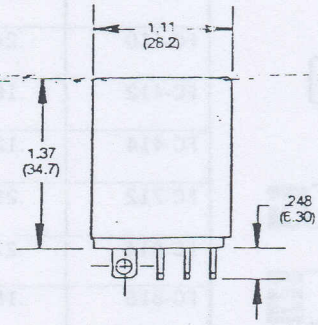

Pin numbers referenced to 8907A socket, disregard numbers stamped on base.

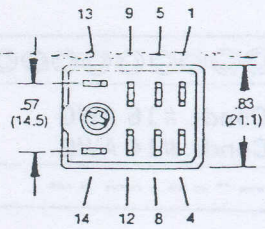

Output Device Dimensions in inches (millimeters)

OUTPUT DEVICE: Model 8530A DPDT Relay 10A, ¼ HP max. at 110/220VAC. 10A at 28VDC.	
Control Unit	Barrier Strip Connections
8171A/B, 1320/21A, 1420A	6 4 5 8 9 7
1311D, 1411D	4 3 5 6 8 7

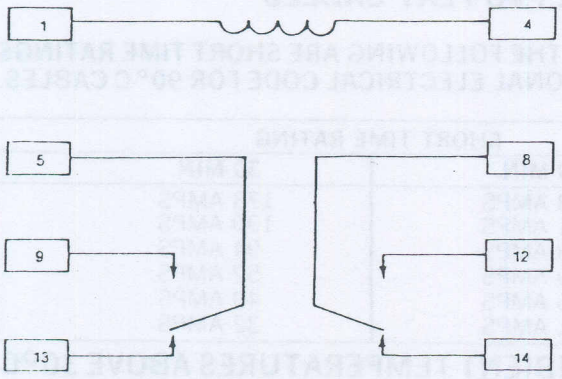

8530 Schematic
Pin Numbers are referenced to the 8907A Panel Mount Socket

8530A Relay & 8907A Socket

Condr. #14 AWG
Condr. #12 AWG
Condr. #10 AWG
Condr. #6 AWG
Condr. #4 AWG
Condr. #2 AWG

8 Condr. #16 AWG
8 Condr. #14 AWG
7 Condr. #12 AWG

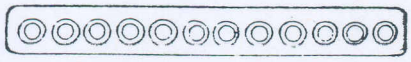

12 Condr. #16 AWG
12 Condr. #14 AWG

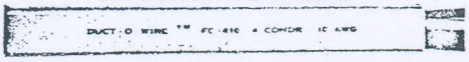

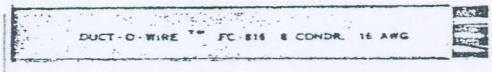

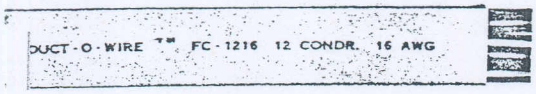

Flat Cable — 600 Volts — PVC Jacketed

UL LISTED

		Extra flexible with yellow outer jacket (Operating Temperature range — 35°C to + 105°C)	CABLE MARKING
FC-42	.95#/Ft.	4 Conductors — #2 AWG Rating: 120 AMPS @ 30°C ambient temperature	T-8417
FC-44	.75#/Ft.	4 Conductors — #4 AWG Rating: 90 AMPS @ 30°C ambient temperature	T-8416
FC-46	.58#/Ft.	4 Conductors — #6 AWG Rating: 70 AMPS @ 30°C ambient temperature	T-8157
FC-410	.24#/Ft.	4 Conductors — #10 AWG Rating: 40 AMPS @ 30°C ambient temperature	T-6800
FC-412	.16#/Ft.	4 Conductors — #12 AWG Rating: 30 AMPS — 30°C ambient temperature	T-8404
FC-414	.12#/Ft.	4 Conductors — #14 AWG Rating: 25 AMPS @ 30°C ambient temperature	T-8403
FC-712	.29#/Ft.	7 Conductors — #12 AWG Rating: 21 AMPS @ 30°C ambient temperature	T-8628
FC-814	.22#/Ft.	8 Conductors — #14 AWG Rating: 17 AMPS @ 30°C ambient temperature	T-8177
FC-816	.18#/Ft.	8 Conductors — #16 AWG Rating: 15 AMPS @ 30°C ambient temperature	T-6801
FC-1214	.34#/Ft.	12 Conductors — #14AWG Rating: 17 AMPS @ 30°C ambient temperature	T-8233
FC-1216	.28#/Ft.	12 Conductors — #16 AWG Rating: 15 AMPS @ 30°C ambient temperature	T-8091

Required length — Track length + 10% + length required for end connections.

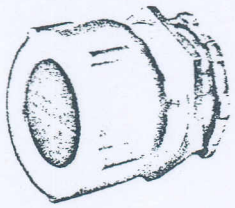

Flat Cable Connector (Cord Grip)

FC-4/8C	.50#	Connector with bushing for FC-410 and 1 - 8 condr. cable (1¼" N
FC-44C	.80#	Connector with bushing for FC-44 cable (2" NPS)
FC-46C	.50#	Connector with bushing for FC-46 flat cable (1½" NPS)
FC-410C	.22#	Connector with bushing for FC-410 Cable (1" NPS)
FC-412C	.22#	Connector with bushing for FC-412 & FC-414 cable (1" NPS)
FC-816C	.50#	Connector with bushing for FC-814 & FC-816 cable (1¼" NPS)
FC-816C2	.50#	Connector with bushing for 2 - 8 conductor cables or for FC-712 flat cable (1¼" NPS)
FC-1216C	.75#	Connector with bushing for FC-1214 & FC-1216 cable (1½" NPS)
FC-1216C2	.75#	Connector with bushing for 2 - 12 conductor cables (1½" NPS)
FC-1216C3	.75#	Connector with bushing for 3 - 12 conductor cables (1½" NPS)

One required for each end of each cable length

Economy cable clamps (not weatherproof) are also available — Consult factory

SHORT TIME CURRENT RATINGS FOR PVC FLAT CABLES

FLAT CABLE RATINGS GIVEN ABOVE ARE FOR CONTINUOUS DUTY. THE FOLLOWING ARE SHORT TIME RATINGS FOR CRANE & HOIST MOTORS PER ARTICLE 610 OF THE 1978 NATIONAL ELECTRICAL CODE FOR 90°C CABLES.

CABLE		SHORT TIME RATING 60 MIN.	SHORT TIME RATING 30 MIN.
#FC-42	4 Conductors — #2 AWG	148 AMPS	173 AMPS
#FC-44	4 Conductors — #4 AWG	111 AMPS	130 AMPS
#FC-46	4 Conductors — #6 AWG	83 AMPS	94 AMPS
#FC-410	4 Conductors — #10 AWG	49 AMPS	52 AMPS
#FC-412	4 Conductors — #12 AWG	36 AMPS	40 AMPS
#FC-414	4 Conductors — #14 AWG	31 AMPS	32 AMPS

DUCT-O-WIRE FLAT CABLE DE-RATING FACTORS FOR AMBIENT TEMPERATURES ABOVE 30°C FULL LOAD CURRENT RATING (PER ARTICLE 310-16 OF THE 1978 NATIONAL ELECTRICAL CODE)

AMBIENT TEMPERATURE °C	°F	CURRENT CORRECTION FACTOR
30	86	1.00 (Full Load Current Rating)
50	122	.82
75	167	.50
90	194	.11

	PART NUMBER	WEIGHT	DESCRIPTION
	FC-CH1A	1.00#/Ft.	**Track or Crossarm Support Bracket** 14 GA. galvanized steel — 10 or 20 ft. lengths — standard. Shorter lengths available as required for crossarms. See installation data for support spacing requirements (Page 8)
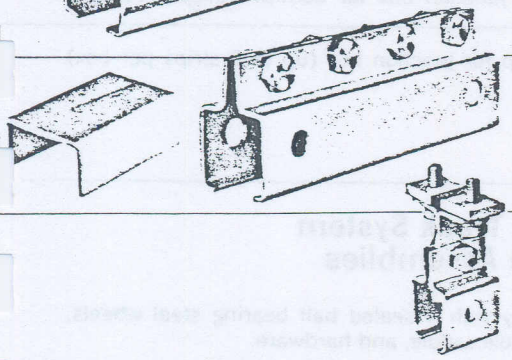	FC-CH1D FC-CH1DW	1.30# .20#	**Track Joint Clamp Assembly** Plated steel joint clamps with 4 bolts, lockwashers, and nuts to insure proper track alignment. Welding sleeve for joining track. One required for each section of track, less 1 per run.
	FC-CH1F	.60#	**Track Hanger Clamp Assembly** Plated steel clamps with mounting bracket and all hardware required to mount to crossarm support channel or steel angles. One required for every support.
	FC-CH1G	.15#	**End Stop** Plated steel bumper with mounting hardware One required for each run of track
	FC-CS1	.80#	**End Clamp and Cable Saddle Assembly** Molded nylon cable saddle and plated steel clamp and hardware to secure cable at cable storage end of track. One required for each run of track
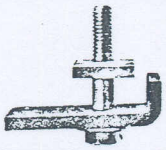	FC-TMC	.45#	**Clamps for Crossarm Support Bracket** Steel L-bracket for clamping FC-CH1A to I-beam. Two required per crossarm support channel.
	FC-TRT1 FC-TRT1-BR FC-TRT1-SS	1.65# 1.65# 1.65#	**Towing Trolley and Cable Saddle Assembly** Trolley and cable saddle assembly with cutout box for tow bar. Same except brass trolley with brass wheels. Same except stainless steel trolley with stainless steel wheels. One required for each piece of moving equipment to be electrified.
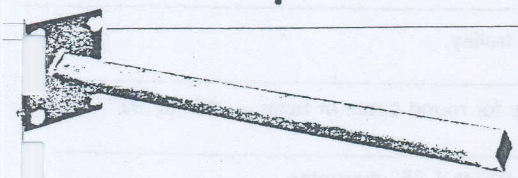	FC-TB1	3.25#	**Tow Bar/Collector Mounting Post** Steel bar with flat plate for mounting on moving equipment to be electrified — 18" long. One required for each towing trolley ordered
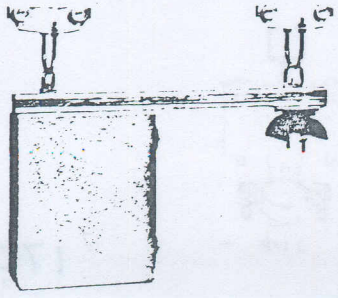	FC-TRC1 FC-TRC1-BR FC-TRC1-SS	5.10# 5.10# 5.10#	**Control Trolley for Push Button Station Control Box** Two trolleys and one cable saddle assembly mounted on bracket with fittings to attach to control box. (Box not included.) Bracket designed for free pivoting of control box for free movement of pendant push button station. Same as above except brass trolleys with brass wheels. Same as above except stainless steel trolleys with stainless steel wheels.

		Junction Box and Terminal Strips
FC-BX1	7.50#	8" x 10" x 4" Steel junction box for control trolley assembly
FC-BXT	.60#	12 Pole terminal strip for junction box (up to 2 strips per box)
		Standard Duty Track System Trolley/Saddle Assemblies
FC-TR1	1.10#	5" Plated steel trolley with 4 sealed ball bearing steel wheels, cable pad, molded cable saddle, and hardware.
FC-TR1-BR	1.10#	5" Brass trolley with 4 sealed ball bearing brass wheels, stainless steel hardware, molded saddle and cable pad.
FC-TR1-SS	1.10#	5" Stainless steel trolley with 4 sealed ball bearing stainless steel trolley wheels, stainless steel hardware, molded saddle, and cable pad.
FC-TR2	.75#	3" Plated steel trolley with 4 sealed steel ball bearing wheels, cable pad, molded cable saddle, and hardware.
		Trolley Requirements **One required for every 5 ft. of track (2½ ft. loop depth) or 8 ft. of track (4 ft. loop depth)** **Max. height of saddle opening — 5 cables. (5" Trolley)** **2 cables (3" Trolley)**
		Trolley/Saddle Options
FC-TR8	1.10#	5" Trolley/Saddle assembly with plated steel saddle.
FC-TRB	.10#	Polyurethane bumper for trolley.
R-SA1	.20#	Swivel adapter with clamp for round cable or hose — .45" to .91" diameter.
R-SA2	.25#	Same as above except — .91" to 1.25" diameter.

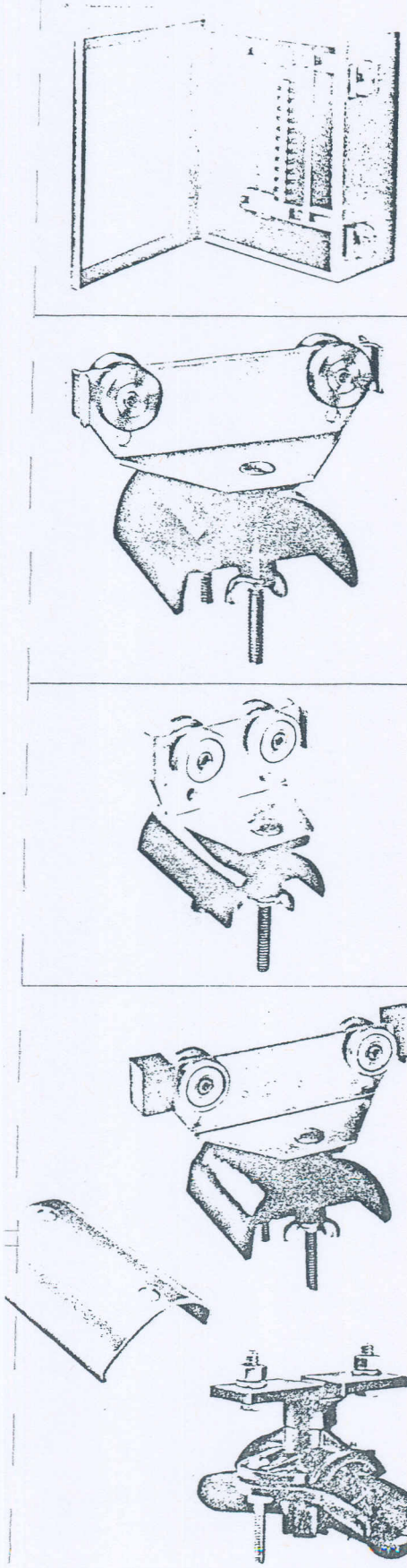

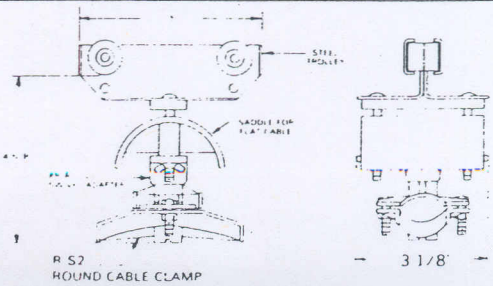

5" C-TRACK SADDLE ASSEMBLY
WITH CLAMP FOR ROUND CABLE OR HOSE

170

General Information

Make certain that selection is made of the proper amperage rated system for the requirements. The correct amperage rating required for a conductor system can be determined by referring to the individual conductor data tabulation for Continuous ratings and resistance factors determining voltage drop.

The following pages list the component parts used in a straight line, or curved conductor system. Conductors rated at 600 volts.

An order for a complete system will include typical installation, mounting and clearance instructions. Special engineering services and installation drawings will be furnished at a nominal charge upon request.

Duct-O-Wire Co. reserves the right to change any design specification without notice. Prices subject to change without notice.

DUCT-O-BAR FIGURE 8

SAFETY ENCLOSED CONDUCTOR SYSTEMS

Conductor Engineering Data

Catalog No.	Description	Ampere Rating		Coefficient of Linear Expansion per °F	Resistance Factor		Circular Mills
		Continuous	Intermittent*		AC (z) ohms/ft.	DC (R) ohms/ft.	
FE-758	Galv. Steel	90	135	.000007	.0011	.00072	130,000
FE-908	Galv. Steel	110	165	.000007	.0008	.0005	189,000
FE-1608	Stainless/Copper Laminate	160	240	.000008	.000144	.0001	188,000
FE-2008	Copper/Steel Laminate	225	337.5	.000008	.000142	.0001	189,000
FE-3008	Rolled Copper	300	450	.000009	.000085	.000058	188,000
FE-5008	Extruded Copper	500	750	.000009	.000065	.000033	315,000

NOTE: Intermittent Service Rating is determined for one minute on, one minute off operation. All conductor data is based on one phase at three inch spacing. AC resistance factor (Z) includes average inductance and configuration factors.

CATALOG NUMBER	DESCRIPTION
	Complete Conductor Assembly The following systems include a 10 ft. long conductor bar section, insulating cover, joint cover, connector pins or joint clamps where applicable:
	Standard Conductor Assembly (160°F)
FE-758-2	**90 AMPS - Continuous, 135 AMPS - Intermittent** Rolled galvanized steel conductor with steel connector pins.
FE-908-2	**110 AMPS - Continuous, 165 AMPS - Intermittent** Rolled galvanized steel conductor with steel connector pins.
FE-1608-2	**160 AMPS - Continuous, 240 AMPS - Intermittent** Rolled stainless steel clad copper conductor with copper connector pins.
FE-2008-2	**225 AMPS - Continuous, 337.5 AMPS - Intermittent** Rolled copper clad steel conductor with copper connector pins.
FE-3008-2	**300 AMPS - Continuous, 450 AMPS - Intermittent** Rolled electrolytic grade copper conductor with copper connector pins.
FE-5008-2	**500 AMPS - Continuous, 750 AMPS - Intermittent** Solid extruded electrolytic grade copper conductor with copper joint clamps.
	High Temperature Conductor Assembly The following systems have a special high heat insulating cover.
FE-758-2XHT	90 AMPS - continuous, 135 AMPS - intermittent
FE-908-2XHT	110 AMPS - continuous, 165 AMPS - intermittent
FE-1608-2XHT	160 AMPS - continuous, 240 AMPS - intermittent
FE-2008-2XHT	225 AMPS - continuous, 337.5 AMPS - intermittent
FE-3008-2XHT	300 AMPS - continuous, 450 AMPS - intermittent
FE-5008-2XHT	500 AMPS - continuous, 750 AMPS - intermittent

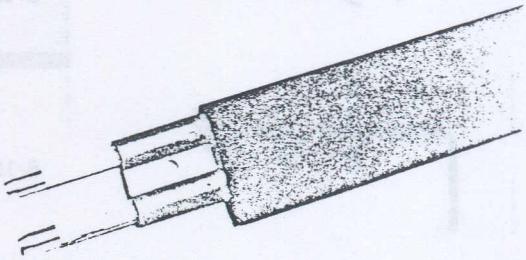

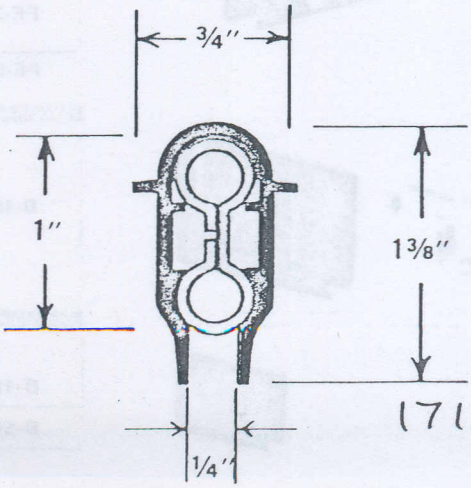

	CATALOG NUMBER	DESCRIPTION
Snap-In Type		**Snap-In Type Hanger Clamps**
	FE-908-2SF	Snap in type hanger – zinc plated
	FE-908-2SFE	Snap in type hanger – coated (PVC)
	FE-908-2SFG	Snap in type hanger c/w insulator – zinc plated
	FE-908-2SFFG	Snap in type hanger c/w insulator – coated (PVC)
		NOTE: Snap in type hangers are not recommended for curves, switches or runs less than 30 ft. long.
		Standard Hanger Clamp (All Systems)
	B-100-2FF	Zinc plated steel hanger clamp complete with bolts, lock washers, and nuts.
	B-100-2FFS	Stainless steel hanger clamp.
	B-100-2FFE	Steel hanger clamp with PVC coating for special environmental applications.
		Hanger Clamp and Insulator Assembly (All Systems)
	B-100-2FG	Complete assembly including zinc plated steel hanger clamp with a high impact rated insulator for outdoor applications.
	B-100-2FSG	Stainless steel hanger clamp assembly with insulator as above.
	B-100-2FFG	PVC coated hanger clamp assembly with insulator as above.
	B-100-BR1A	**Steel Mounting Brackets** Several configurations of hanger support brackets are available as standard assemblies. Consult the factory for recommendations and detailed information.
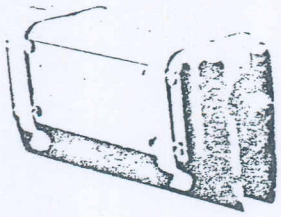		**Center Power Feed**
	FE-908-2CP	110 AMP rated with insulating case. (Will accept up to #4 AWG cable)
	FE-2008-2CP	225 AMP rated with insulating case for FE-1608 and FE-2008 Systems. (Will accept up to #1/0 cable)
	FE-3008-2CP	300 AMP rated with insulating case for FE-3008-2 System. (Will accept up to #3/0 cable)
	FE-5008-2CP	500 AMP rated with insulating case for FE-5008 System. (Will accept up to 300 MCM cable)
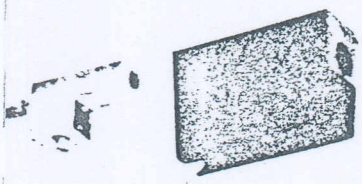	B-100-1GCP	**End Power Feed** For use only with FE-908-2 and B-75-2 conductor bars 110 AMP rated with end cap.
		End Cap
	B-100-1GCK	Protective vinyl end cover for rolled conductors.
	B-500-1GCK	Protective vinyl end cover for extruded conductors—FE-5008 System.
		For FE-758-2 System see FE-908-GCT transfer caps.

CATALOG NUMBER	DESCRIPTION

Expansion Assembly (10 Ft. Section) With Anchor

All assemblies include conductor bar sections, insulating covers, connector pins (one end), guide assembly, and two power feeds with jumper cable to comprise a complete assembly.

FE-758-2H10	For FE-758-2 standard system
FE-758-2H10XT	For FE-758-2XHT high temperature system
FE-908-2H10	For FE-908-2 standard system
FE-908-2H10XT	For FE-908-2XHT high temperature system
FE-1608-2H10	For FE-1608-2 standard system
FE-1608-2H10XT	For FE-1608-2XHT high temperature system
FE-2008-2H10	For FE-2008-2 standard system
FE-2008-2H10XT	For FE-2008-2XHT high temperature system
FE-3008-2H10	For FE-3008-2 standard system
FE-3008-2H10XT	For FE-3008-2XHT high temperature system
FE-5008-2H10	For FE-5008-2 standard system
FE-5008-2H10XT	For FE-5008-2XHT high temperature system

IMPORTANT:
Customer to specify catalog number of hangers used on balance of system.

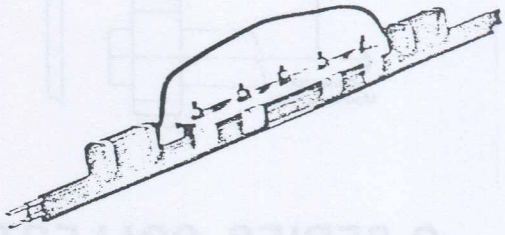

Collector Pickup Guide Section

FE-2JNN4	Factory assembled pickup guide section with DUCT-O-BAR (2 ft. long) and transfer cap. Specify catalog number of conductor bar used. 4" minimum conductor spacing is required.

Transfer Cap

FE-908-GCT	Insulated transfer cap used at each conductor end where there is a gap in the system.

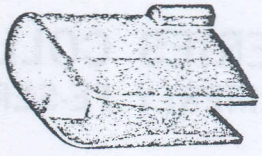

Transfer Guide Assembly

B-100-TG	Consists of four galvanized steel hanger clamps and aluminum guide channel, for use with isolating sections.
B-100-TGE	Same as above except with epoxy coated hangers.

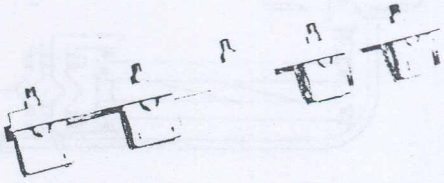

Isolating Section

FE-908-IP	Isolating piece only. (1" long.) (All systems except FE-758)
FE-908-IS	Eight inch long isolating section. Conductor bar must be drilled with $^{19}/_{64}$" drill.

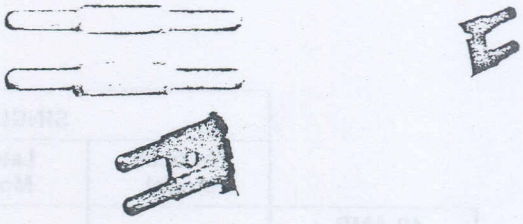

Connector Tool

FE-908-1M	One tool is normally ordered for every 500 feet of conductor ordered.

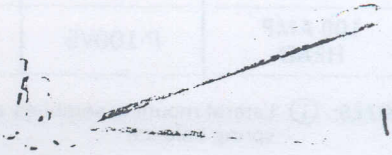

(C-SERIES AND P-SERIES COLLECTORS)

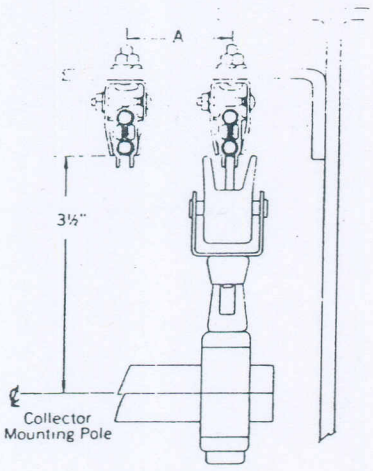

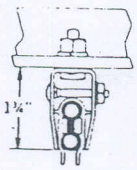

Standard Hanger Clamp

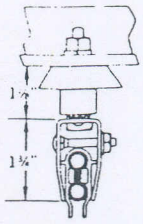

Hanger & Insulator Assembly

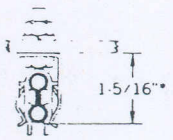

*Add 1⅛" for hanger w/ insulator

Snap-In Type Hanger Assembly

DIMENSION A	
2"	—When collectors are adjacent
1½"	—When collectors are staggered
3"	—When pickup guides are used

DIMENSION D	
40 AMP Collectors	2"
100 AMP Collectors	3"

C-SERIES COLLECTORS

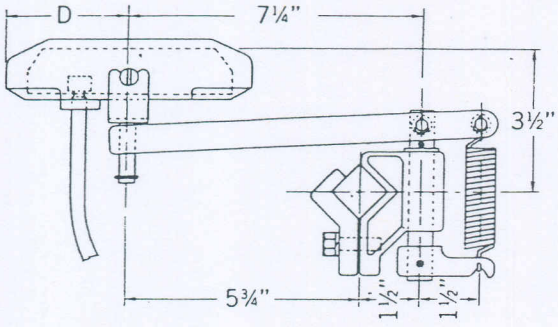

	SINGLE SHOE	
	Vertical Mount	Lateral Mount
40 AMP HEAD	C-40V3	C-40L3
100 AMP HEAD	C-100V5	C-100L5

NOTES: ① Lateral mount assemblies provided with steel counterweights.
② Last number in catalog number denotes contact shoe length in inches.

P-SERIES COLLECTORS (PANTOGRAPH TYPE)
(FORMERLY FE-SERIES)

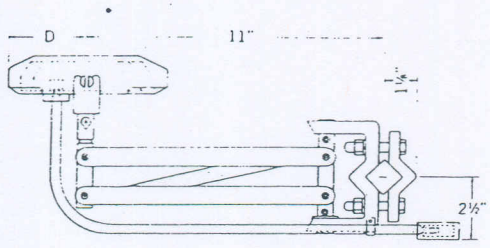

Single Shoe

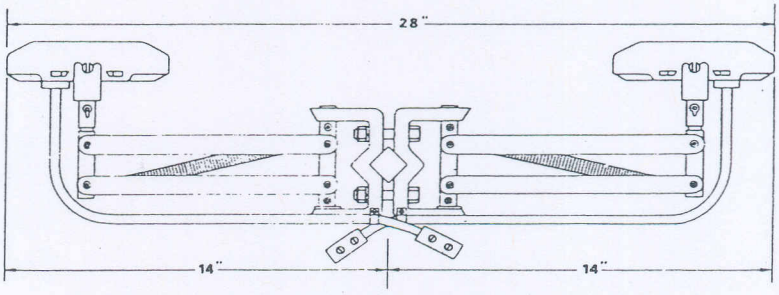

Double Shoe

	SINGLE SHOE			DOUBLE SHOE		
	Vertical Mount	Lateral Mount	Self Centering	Vertical Mount	Lateral Mount	Self Centering
40 AMP HEAD	P-40V3	P-40L3	P-40S3	P-80VT3	P-80LT3	P-80ST3
100 AMP HEAD	P-100V5	P-100L5	P-100S5	P-200VT5	P-200LT5	P-200ST5

NOTES: ① Lateral mount assemblies are provided with spring balance

② Last number designated in catalog number denotes contact shoe length in inches.

DUCT-O-WIRE COMPANY

Box 8236
Long Beach California 90808
Phone 213 636-0547
Telex 65-6485

Box 274
Waukesha Wisconsin 53186
Phone 414 544 4944
Telex 26 9531

Box 576
Oakville Ontario Canada
Phone 416 844 1791
Telex 69 82296

COLLECTOR REPLACEMENT PARTS

C — SERIES COLLECTORS

COMPLETE HEADS
(SHOE, HOLDER, CLEVIS)

40 AMP — #C-40ABC3
100 AMP — #C-100ABC5

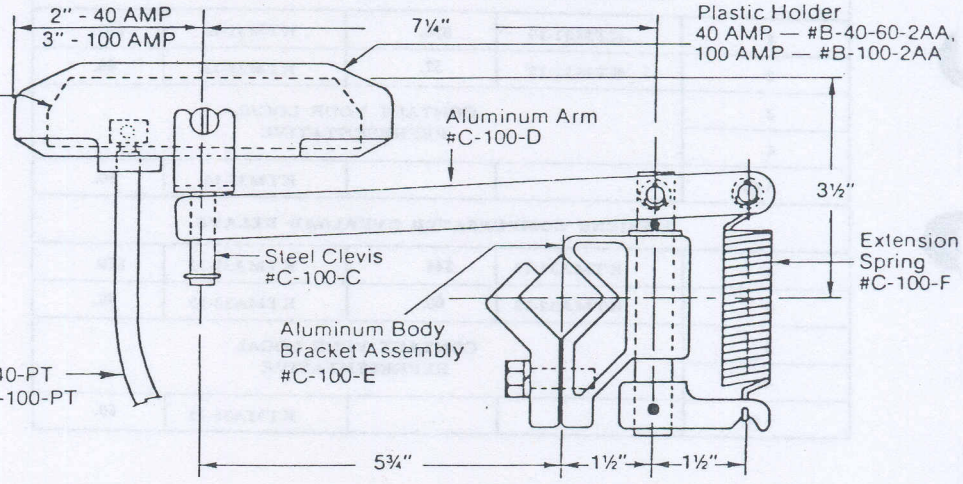

P — SERIES COLLECTORS

COMPLETE HEADS
(SHOE, HOLDER, CLEVIS)

40 AMP — #P-40ABC3
100 AMP — #P-100ABC3

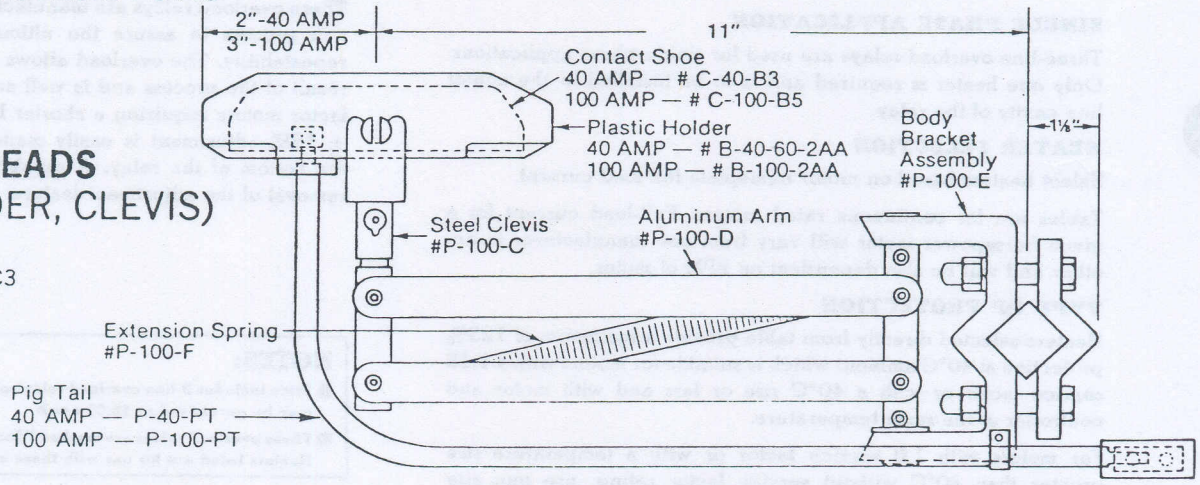

B — SERIES COLLECTORS
(OBSOLETE DESIGN)

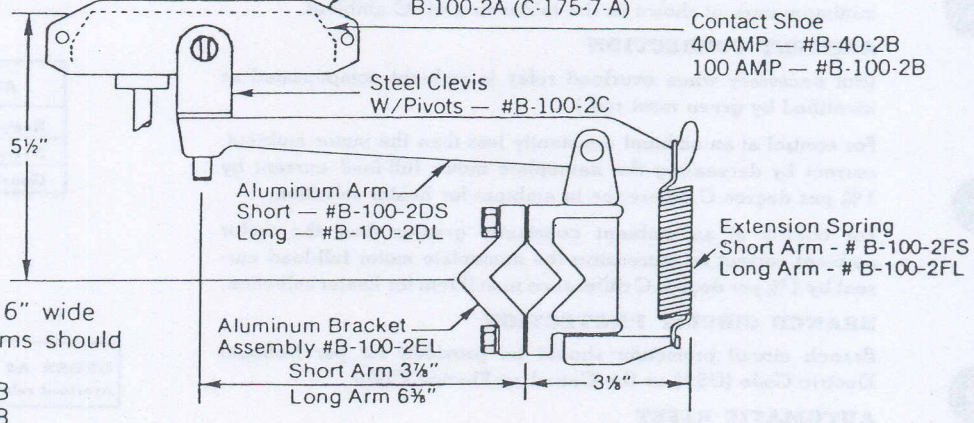

NOTE: Some older systems require 3/16" wide contact shoes. The following items should be ordered:
30 AMP Contact Shoe — #B-30-2B
75 AMP Contact Shoe — #B-75-2B
Plastic Holder For B-30-2B (2 piece) — #B-30-2A
Plastic Holder For B-75-2B (2 piece) — #B-75-2A

*SEE OVERLEAF FOR OBSOLETE PARTS

©COPYRIGHT 1974 BY DUCT-O-WIRE COMPANY PRINTED IN CANADA

PANEL MOUNTING—SINGLE AND POLY PHASE—TYPE TM
BIMETALLIC AND AMBIENT COMPENSATED

Discount Schedule D3 ❶ PRICES and CATALOG NUMBERS				
Overload Relay Size	Normally Closed Contacts		Normally Open & Normally Closed Contacts	
	Cat. No.	Price	Cat. No.	Price
STANDARD BIMETALLIC OVERLOAD RELAYS				
1	KTM31-12	$36.	KTM31-13	$52.
2	KTM32-12	52.	KTM32-13	68.
3	CONTACT YOUR LOCAL REPRESENTATIVE			
4				
5 ❷	.....	...	KTM35-13	60.
AMBIENT COMPENSATED OVERLOAD RELAYS				
1	KTMA31-12	$44.	KTMA31-13	$60.
2	KTMA32-12	60.	KTMA32-13	76.
3	CONTACT YOUR LOCAL REPRESENTATIVE			
4				
5 ❷	.....	....	KTMA35-13	68.

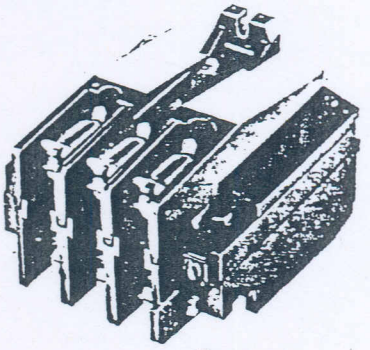

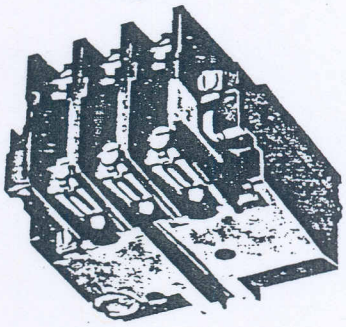

HEATER APPLICATION DATA

SINGLE PHASE APPLICATION

Three-line overload relays are used for single phase applications. Only one heater is required and is to be installed in the center line cavity of the relay.

HEATER SELECTION

Select heaters based on motor nameplate full-load current.

Tables are for continuous rated motors. Full-load current for a given horsepower motor will vary from one manufacturer to another and will be also dependent on RPM of motor.

TYPE OF PROTECTION

Heaters selected directly from table provide a maximum of 125% protection at 40°C ambient which is suitable for motors with a 1.15 service factor or with a 40°C rise or less and with motor and controller at the same temperature.

For motors with 1.0 service factor or with a temperature rise greater than 40°C without service factor rating, use one size smaller heaters than selected directly from table.

The ultimate trip of the heater is approximately 125% of the minimum current shown in the tables in a 40°C ambient.

AMBIENT CORRECTION

(Not necessary when overload relay is ambient compensated as identified by green reset rod.)

For control at an ambient constantly less than the motor ambient, correct by decreasing the nameplate motor full-load current by 1% per degree C difference in ambient for heater selection.

For control at an ambient constantly greater than the motor ambient correct by increasing the nameplate motor full-load current by 1% per degree C difference in ambient for heater selection.

BRANCH CIRCUIT PROTECTION

Branch circuit protection should be provided for per National Electric Code (USA) or the Canadian Electric Code.

AUTOMATIC RESET

Automatic reset operation should not be used with two wire control.

OVERLOAD ADJUSTMENT

These overload relays are manufactured with an exclusive calibration process to assure the ultimate in tripping accuracy and repeatability. The overload allows a true ± 15% adjustment as a result of the process and is well suited for use with unity service factor motors requiring a shorter locked rotor tripping time. The ± 15% adjustment is easily made by means of a small dial on the bottom of the relay. A quick field modification also permits removal of the adjustment feature.

NOTES:

❶ Price includes 3-line overload relay complete except less heaters. Heaters may be purchased at $6.00 each.

❷ These overload relays are marked "For use only with current transformers". Heaters listed are for use with these current transformers.

ADDITIONAL DATA	Page No.
Heaters	217
Average Full-load Current Table	4
General Engineering Data	168

ORDER AS FOLLOWS: (Quantity)—Catalog No. ( ) Bulletin 7324-TM overload relays. (Quantity)—Catalog No. ( ) heaters.

Sylvania quality is based on innovation, integrity and reliability.

AUGUST 1976
Supersedes Bulletin
October 1972

service bulletin SB-6000.1TM

SIZE 00, 0, 1, 1P & 2

MAINTENANCE INSTRUCTIONS AND RENEWAL PARTS

APPLICABLE TO TYPE TM–A-C MAGNETIC STARTERS AND CONTACTORS–SIZE 00, 0, 1, 1P & 2
Bulletins 6013, 6030, 6031 & 6025 Starters & Bulletin 7707 Contactors

RENEWAL PARTS

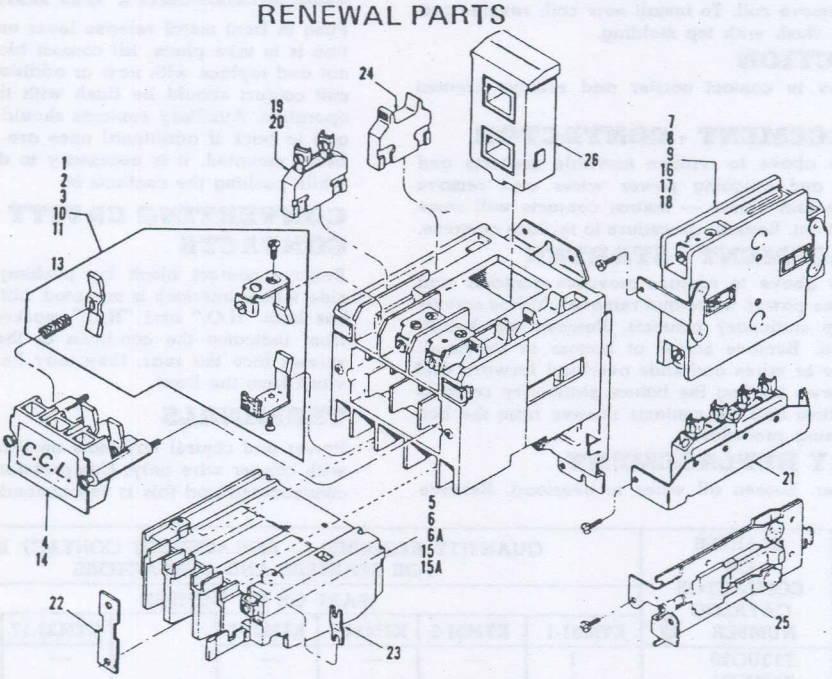

RENEWAL PARTS AND KIT NUMBERS					
Ref. No.	Description	Part or Kit No.	Ref. No.	Description	Part or Kit No.
	SIZE 00, 0 AND 1 ONLY			**SIZE 00, 0, 1, 1P AND 2**	
1	•Contact Kit, 3 Pole Starter and Contactor	KTM31-1	19	Auxiliary Contact Kit, N.O.	KTM-10
2	•Contact Kit, 4th Pole	KTM31-2	20	Auxiliary Contact Kit, N.C.	KTM-11
3	•Contact Kit, Tie Pole (2 Required)	KTM32-17	21	Auxiliary Contacts, Side Mounted, 2 N.O.	KTM-20
4	Moveable Contact Carrier, 3 Pole	KTM31-4	22	Power Jumper (Supplied prior to Sept. 1971)	A73-301849
5	Overload Relay, Standard (Non-compensated), Less Heaters, For Single Phase Starters, Sizes 00, 0, 1 and 1P	KTM31-14	23	Control Jumper	A73-301853
6	Overload Relay, Standard (Non-compensated), Less Heaters, For Two and Three Phase Starters, Sizes 00, 0 and 1	KTM31-15	24	Cavity Cover	A77-300545
6A	Overload Relay, Ambient Compensated, Less Heaters, For Two and Three Phase Starters, Sizes 00, 0 and 1	KTMA31-15	25	Horizontal Mechanical Interlock	KTM32-10
7	N.O. Power Pole	KTM41-1	26	Coil (For proper selection see table below)	TB159
8	N.C. Power Pole	KTM41-2	27	*Power Pole Insulator (For use on Nema 1 enclosed 4 pole, Bulletin 6013 and 7707)	KTM-27
9	Tie Pole	KTM51-1			
	SIZE 1P AND 2 ONLY				
5	Overload Relay, Standard (Non-compensated), Less Heaters, For Single Phase Starters, Size 1P	KTM31-14			
10	•Contact Kit, 3 Pole, Starter	KTM32-1			
11	•Contact Kit, 1 Pole, Contactor	KTM32-2			
13	•Contact Kit, Tie Pole	KTM32-18			
14	Moveable Contact Carrier, 3 Pole	KTM32-4			
15	Overload Relay, Standard (Non-compensated), Less Heaters, For Two and Three Phase Starters, Size 2	KTM32-15			
15A	Overload Relay, Ambient Compensated, Less Heaters, For Two and Three Phase Starters, Size 2	KTMA32-15			
16	N.O. Power Pole	KTM42-1			
17	N.C. Power Pole	KTM42-2			
18	Tie Pole	KTM52-1			

•See quantity table for number required.
*Not illustrated.
Note: Heater tables are on TM Heater Data pages and overload relay price sheets in the Controlog.

REF. NO. 26 — COIL		
Volts	Hertz	Coil Part No.
24	60	TB159-9
110	25	TB159-5
110 110-120	50 60	TB159-1
200-208	60	TB159-10
220	25	TB159-6
220 220-240	50 60	TB159-2
380	50	TB159-11
440	25	TB159-7
440 440-480	50 60	TB159-3
550 550-600	50 60	TB159-4

COIL REPLACEMENT

Before any starter maintenance begins, be sure to turn POWER OFF.

Read instructions on starter back clip. Pry up clip with screwdriver and remove. Remove magnet through back. Put finger in where magnet was and push up to remove coil. To install new coil, reverse procedure. Coil top should be flush with top molding.

CONTACT INSPECTION

Loosen two captive screws in contact carrier and remove contact carrier.

CONTACT REPLACEMENT - CONTACTOR

Remove contact carrier as above to replace movable contacts and springs. Loosen incoming and outgoing power wires and remove phillips screws from above and below — bottom contacts will come out with screws, top will lift out. Reverse procedure to replace contacts.

CONTACT REPLACEMENT - STARTER

Remove contact carrier as above to replace movable contacts and springs. Loosen incoming line power wires and remove phillips screws from above — lift out top stationary contacts. Remove top heater screws plus right coil lead. Remove screw at bottom of overload, loosen control terminal wire or wires and slide overload forward and off starter. The phillips screws holding the bottom stationary contacts are accessible from the bottom and the contacts remove from the bottom. Reassemble by reversing procedure.

OVERLOAD RELAY REPLACEMENT

Remove heaters and jumper. Loosen all wires to overload. Remove bottom overload screw and slide overload out toward front. Reverse procedure to replace.

AUXILIARY CONTACT (CAVITY MOUNTED) REPLACEMENT OR ADDITION

Push in front metal release lever on side where replacement or addition is to take place, lift contact block or plastic cavity cover up and out and replace with new or additional unit. The top of the control circuit contact should be flush with the top outside molding for proper operation. Auxiliary contacts should be mounted in front positions first and in back if additional ones are required. When N.C. contacts are being mounted, it is necessary to depress the contact carrier slightly while pushing the contacts in.

CONVERTING CAVITY CONTROL CIRCUIT CONTACTS

Remove contact block by pushing in front metal release lever on side where interlock is mounted. Lift contact up and out. Note the block has both "N.O." and "N.C." marked on it. Whichever marking faces front indicates the condition of the deenergized contact. If terminal screws face the rear, they may be removed and mounted to be serviced from the front.

TERMINALS

Power and control terminals on standard devices are suitable for use with copper wire only. Compression ring tongue terminals can be accommodated and this is recommended for aluminum wire connections.

STARTER OR CONTACTOR CATALOG NUMBER ❶	QUANTITY REQUIRED — REPLACEMENT CONTACT KITS FOR STARTERS AND CONTACTORS						
	PART OR KIT NUMBER						
	KTM31-1	KTM31-2	KTM32-1	KTM32-2		KTM32-17	KTM32-18
T13UO20	1	—	—	—		—	—
T13UO21	1	—	—	—		—	—
T13UO2P	—	—	—	2		—	—
T13UO30	1	—	—	—		—	—
T13UO31	1	—	—	—		—	—
T13UO32	—	—	1	—		—	—
T13UO40	1	1	—	—		—	—
T13UO41	1	1	—	—		—	—
T13UO42	—	—	1	1		—	—
T30UO30	2	—	—	—		—	—
T30UO31	2	—	—	—		—	—
T30UO32	—	—	2	—		—	—
T30UO40	2	2	—	—		—	—
T30UO41	2	2	—	—		—	—
T30UO42	—	—	2	2		—	—
T31UO30	2	—	—	—		—	—
T31UO31	2	—	—	—		—	—
T31UO32	—	—	2	—		—	—
T31UO40	2	2	—	—		—	—
T31UO41	2	2	—	—		—	—
T31UO42	—	—	2	2		—	—
T50UO0C2	2	—	—	—		2	—
T50UO1C2	2	—	—	—		2	—
T50UO2C2	—	—	2	—		—	2
T50UO0S2	2	—	—	—		—	—
T50UO1S2	2	—	—	—		—	—
T50UO2S2	—	—	2	—		—	—
T77UO10	1	—	—	—		—	—
T77UO11	1	—	—	—		—	—
T77UO20	1	—	—	—		—	—
T77UO21	1	—	—	—		—	—
T77UO22	—	—	—	2		—	—
T77UO30	1	—	—	—		—	—
T77UO31	1	—	—	—		—	—
T77UO32	—	—	1	—		—	—
T77UO40	1	1	—	—		—	—
T77UO41	1	1	—	—		—	—
T77UO42	—	—	1	1		—	—
QUANTITY REQUIRED — REPLACEMENT CONTACT KITS FOR SIDE MOUNTED POWER POLES							
KTM41-1	—	1	—	—		—	—
KTM42-1	—	—	—	1		—	—
KTM41-2	—	—	—	—		1	—
KTM42-2	—	—	—	—		1	—
KTM51-1	—	—	—	—		2	—
KTM52-1	—	—	—	—		—	1

❶ Catalog number printed on side of starter, contactor or power pole.

MAINTENANCE INSTRUCTIONS AND RENEWAL PARTS

APPLICABLE TO TYPE TM–A-C MAGNETIC STARTERS AND CONTACTORS–SIZES 3 & 4

Bulletins 6013, 6030, 6031 & 6025 Starters & Bulletin 7707 Contactors

RENEWAL PARTS

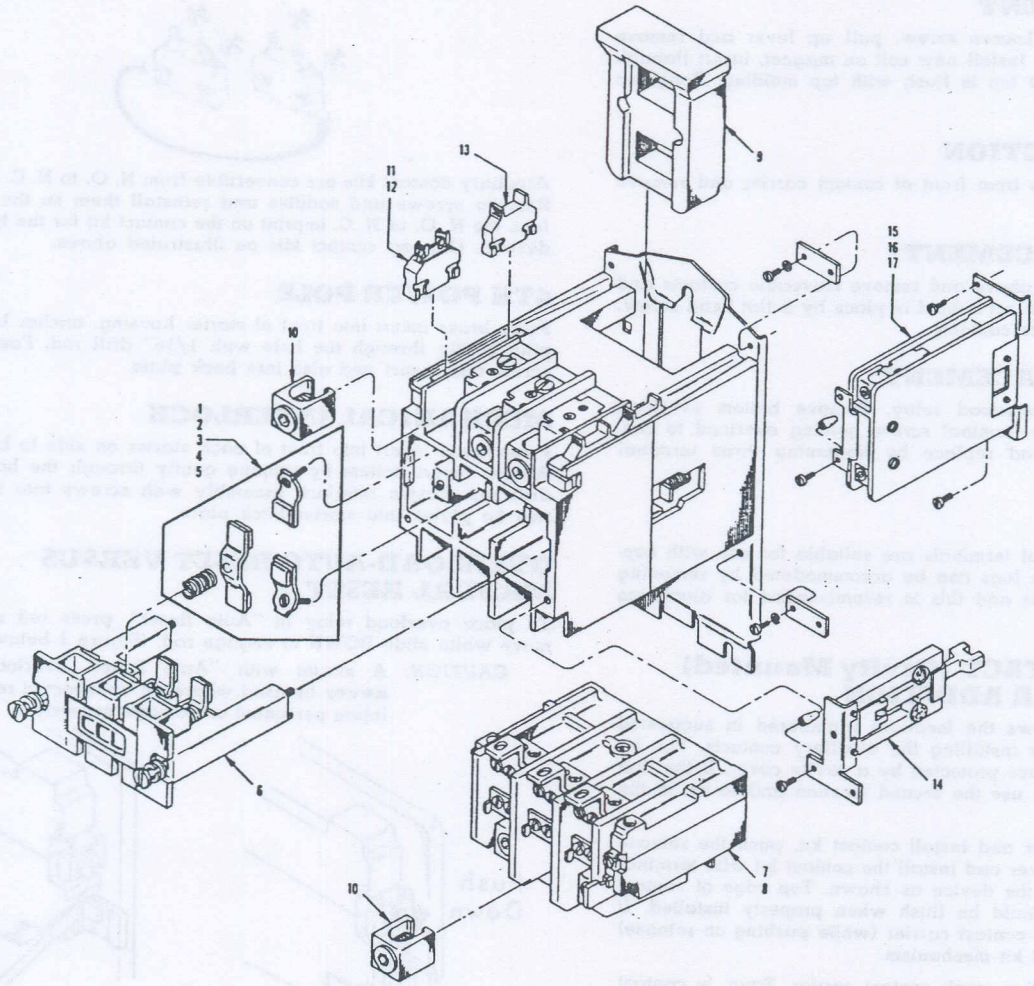

RENEWAL PARTS AND KIT NUMBERS			
Ref. No.	Description	Part or Kit Number	
		Size 3	Size 4
1	Contacts and Springs, 3 Pole Starter and Contactor	KTM33-1	KTM34-1
2	Contacts and Springs, 2 Pole Starter and Contactor (2 req'd.)	KTM33-2	KTM34-2
3	Contacts and Springs, Power Pole N. O.	KTM33-2	KTM34-2
4	Contacts and Springs, Power Pole N. C.	KTM34-17	KTM34-17
5	Contacts and Springs, Power Tie Pole (2 req'd.)	KTM34-17	KTM34-17
6	Moveable Contact Carrier, 2 & 3 Pole, less Contacts	KTM33-4	KTM34-4
7	Replacement Overload Relay, Standard, less Heaters	KTM33-15	KTM34-15
8	Replacement Overload Relay, Ambient Compensated, less Heaters	KTMA33-15	KTMA34-15
9	Coil	See Coil Table	
10	Power Lug	A77-301986A	A77-301987A
MODIFICATION ACCESSORIES			
11	Auxiliary Contact, N. O.	KTM-10	KTM-10
12	Auxiliary Contact, N. C.	KTM-11	KTM-11
13	Cavity Cover	A77-300545	A77-300545
14	Horizontal Mechanical Interlock	KTM34-10	KTM34-10
15	Power Pole, N. O.	KTM43-1	KTM44-1
16	Power Pole, N. C.	KTM43-2	KTM44-2
17	Power Tie Pole — 2 N. O. (3 Terminal)	KTM53-1	KTM54-1

REF. NO. 9 — COIL TABLE			
Volts	Hertz	Size 3	Size 4
110-120	60	TB162-7	TB162-1
110	50		
220-240	60	TB162-8	TB162-2
220	50		
440-480	60	TB162-9	TB162-3
440	50		
550-600	60	TB162-10	TB162-4
550	50		
200-208	60	TB162-14	TB162-16
110	25	TB162-14	TB162-5
220	25	TB162-15	TB162-17
440	25	TB162-6	TB162-11
380	50	TB162-15	TB162-17

MAINTENANCE INSTRUCTIONS

efore any starter maintenance begins, turn the POWER OFF!

COIL REPLACEMENT

ead instructions above! Loosen screw, pull up lever and remove agnet with coil from top. Install new coil on magnet, insert through p. press in place so coil top is flush with top molding. Retighten lever screw.

ONTACT INSPECTION

osen two captive screws from front of contact carrier and remove carrier with contacts.

ONTACT REPLACEMENT

emove contact carrier as above and remove moveable contacts and springs. Each stationary contact is held in place by a flat head screw. Remove screws and replace contacts.

VERLOAD REPLACEMENT

emove all wires from overload relay. Remove bottom overload mounting screw, and three terminal screws joining overload to contacts. Remove overload and replace by tightening three terminal rews first.

TERMINALS

Standard power and control terminals are suitable for use with copr wire only. Ring tongue lugs can be accommodated by removing ndard pressure terminals and this is recommended for aluminum re connections.

UXILIARY CONTACT (Cavity Mounted) EPLACEMENT OR ADDITION

e illustration below shows the locations (numbered in suggested order of use) available for installing the auxiliary contacts. The kit ill normally occupy a space protected by a cavity cover. If the first ation is already utilized, use the second location and so on, in the der shown.

To remove the cavity cover and install contact kit, push the release lever, lift out the cavity cover and install the contact kit with terminal rews facing the front of the device as shown. Top edge of contact housing and device should be flush when properly installed. It y be necessary to move contact carrier (while pushing on release) to seat and engage contact kit mechanism.

To check for proper operation, push contact carrier. Tang, in contact using, will rise and lower through opening in housing if mechanism engaged. Contact carrier should move freely with a full stroke.

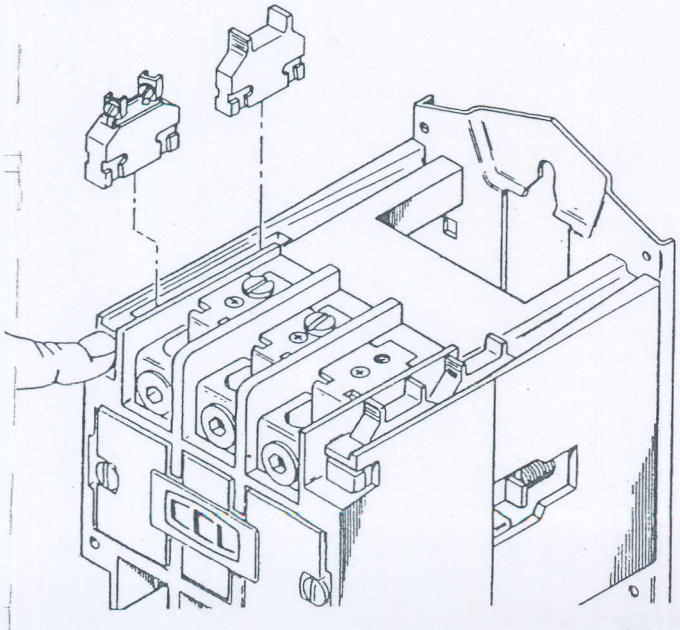

AUXILIARY CONTACT CONVERSION (Cavity Mounted)

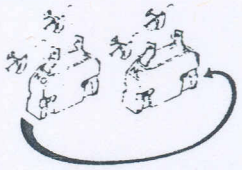

Auxiliary contact kits are convertible from N. O. to N. C. or vice versa. Remove screws and saddles and reinstall them so the screw heads face the N. O. or N. C. imprint on the contact kit for the type of contact desired. Convert contact kits as illustrated above.

4TH POWER POLE

Press brass insert into front of starter housing, anchor bottom by tapping gently through the hole with 1/16" drill rod. Fasten pole with screw into insert and also into back plate.

MECHANICAL INTERLOCK

Press brass insert into front of each starter on side to be interlocked. Anchor insert bottom by tapping gently through the hole wih 1/16" drill rod. Fasten interlock assembly with screws into inserts. Screw two tie plates into starter back plate.

OVERLOAD-AUTO RESET VERSUS MANUAL RESET

To place overload relay in "Auto Reset", press red reset rod and move white slide DOWN to engage rod. (Figure 1 below)

CAUTION: A starter with "Auto Reset" overload should **never** be used where an unexpected restart may injure personnel or damage property.

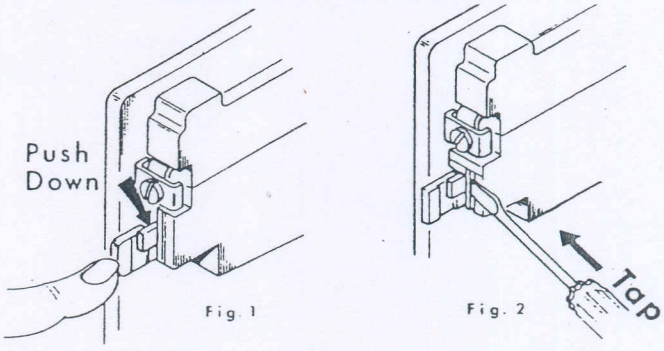

For permanent "Manual Reset", remove white slide by breaking off edge of housing where grooved. Tap with screwdriver. (See illustration, Figure 2 above.)

OVERLOAD TRIP CALIBRATION
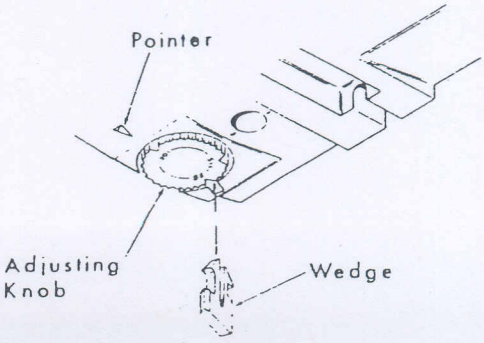
Turn knob underneath overload to adjust calibration from 85% to 115%. For permanent set at 100%, lock adjustment knob by inserting wedge (KTM-25) in square hole. If desired, to prevent withdrawal, the extended portion of the pin may be clipped off.