THIS DOCUMENT CONTAINS INFORMATION PROPRIETARY TO RADIATION SOLUTIONS INC. ANY DISCLOSURE, USE OR DUPLICATION OF THIS DOCUMENT OR ANY OF THE INFORMATION CONTAINED HEREIN FOR OTHER THAN THE SPECIFIC PURPOSE FOR WHICH IT WAS DISCLOSED BY RADIATION SOLUTIONS INC. IS EXPRESSLY PROHIBITED, EXCEPT AS RADIATION SOLUTIONS INC. MAY OTHERWISE AGREE IN WRITING.

REVISION HISTORY

ECO#	REV	DESCRIPTION	DATE	APPD.
-	00.00	PRELIMINARY ISSUE	12/05/09	
-	00.01	UPS ADDED	13/08/09	
-	00.02	DRAWING MADE MORE GENERIC FOR ALL DETECTOR INSTALLS	17/05/10	
-	00.03	CAMERA'S ADDED	24/05/11	

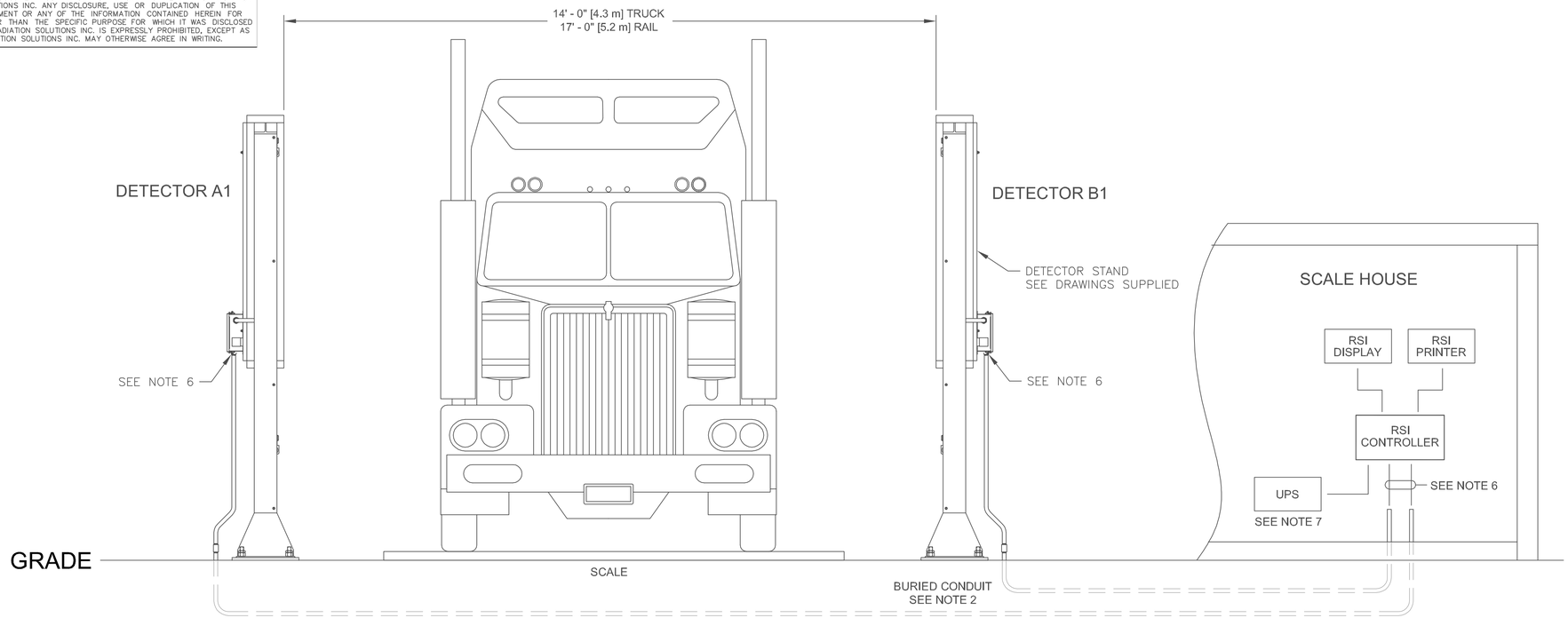

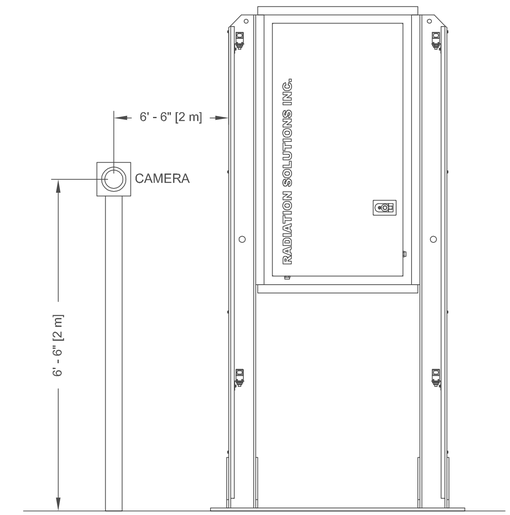

VIEW 'B'

TYPICAL

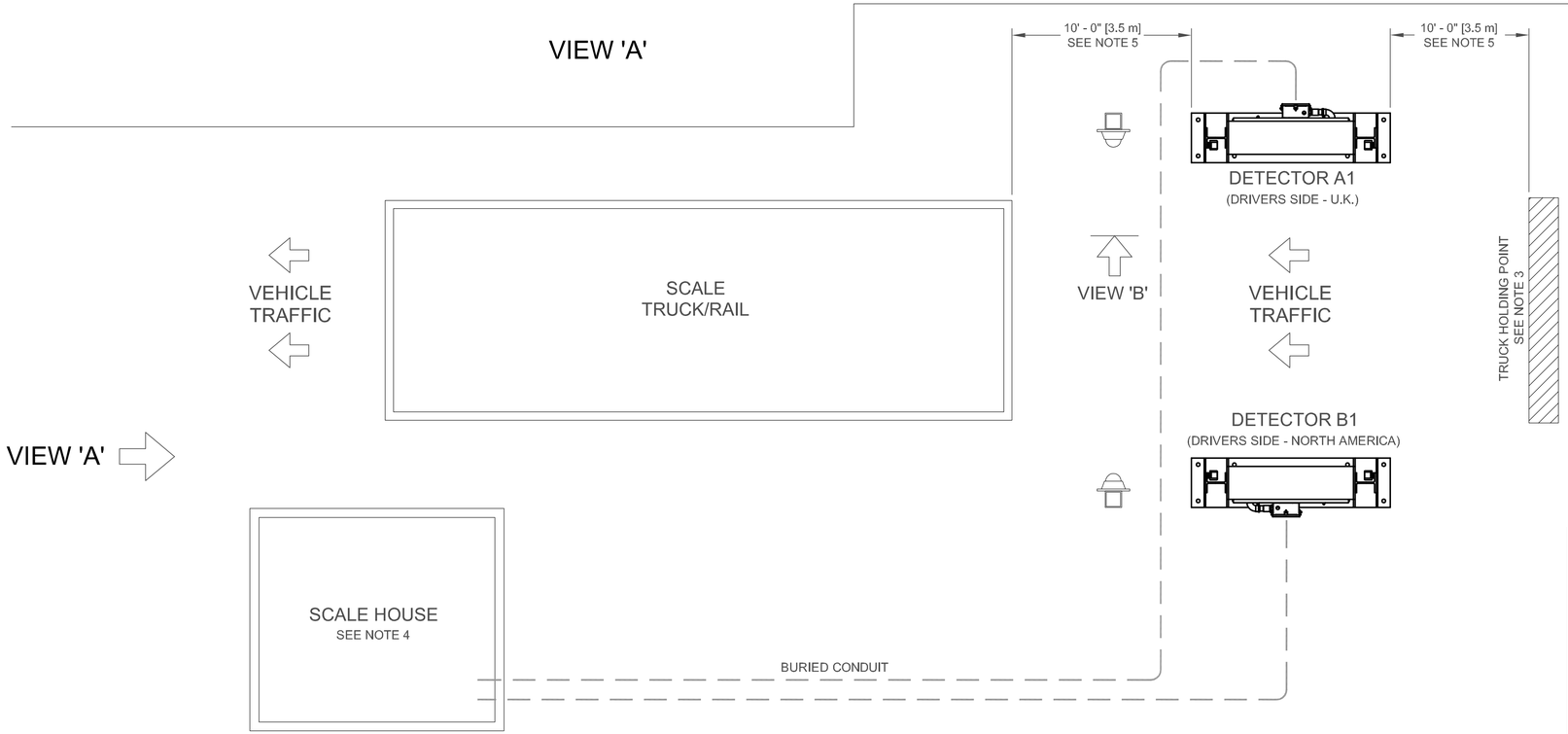

NOTES:

1. HOOK-UP CABLE SUPPLIED FOR A TYPICAL INSTALLATION IS 200 FEET, APPROX. 61 m. IF LONGER CABLES ARE REQUIRED, CONTACT RADIATION SOLUTIONS ALLOWING 4 WEEKS FOR DELIVERY.
2. ALL BURIED RIGID CONDUIT TO BE 1 1/4" [31.7 mm] , GALVANIZED OR STAINLESS.
3. INSTALL STOP SIGN AT THIS LOCATION
4. SCALE HOUSE CAN BE ON EITHER SIDE OF THE ACCESS ROAD. CONDUIT RUN IS TYPICAL.
5. THIS SEPARATION IS RECOMMENDED. IF THESE DISTANCES CAN NOT BE ACHIEVED, CONTACT RADIATION SOLUTIONS.
6. TERMINATE CONDUIT LEAVING A MINIMUM OF 36" [0.9m] OF EXPOSED CABLE PROTRUDING FROM CONDUIT.
7. POWER (AC) TO BE CONNECTED TO A UPS.

QTY	ITEM	PART OR IDENTIFYING NO.	NOMENCLATURE OR DESCRIPTION	NOTE

PARTS LIST

DO NOT SCALE DRAWING

UNLESS OTHERWISE SPECIFIED DIMENSIONS ARE IN INCHES
TOLERANCES ARE:
DECIMALS .X ± .1 .XX ± .01 .XXX ± .005
ANGLES ±5°
SURFACE 125

MATERIAL:

FINISH:

	SIGNATURE	DATE
DRAWN	K. GOWER	12/05/09
CHECK		
DESIGN		
MANUFACTURING		
Q/A		

Radiation Solutions Inc.
160 Matheson Blvd. East - Unit 4
Mississauga Ontario
Canada L4Z 1V4

MODEL: RSS

TITLE: RS200/300/400 GENERIC SITE LAYOUT

SIZE: D

DWG NO.: P-1326

REV: 00.03

SCALE: NONE

WEIGHT:

SHEET 1 OF 1

CAD_D1 04/2004