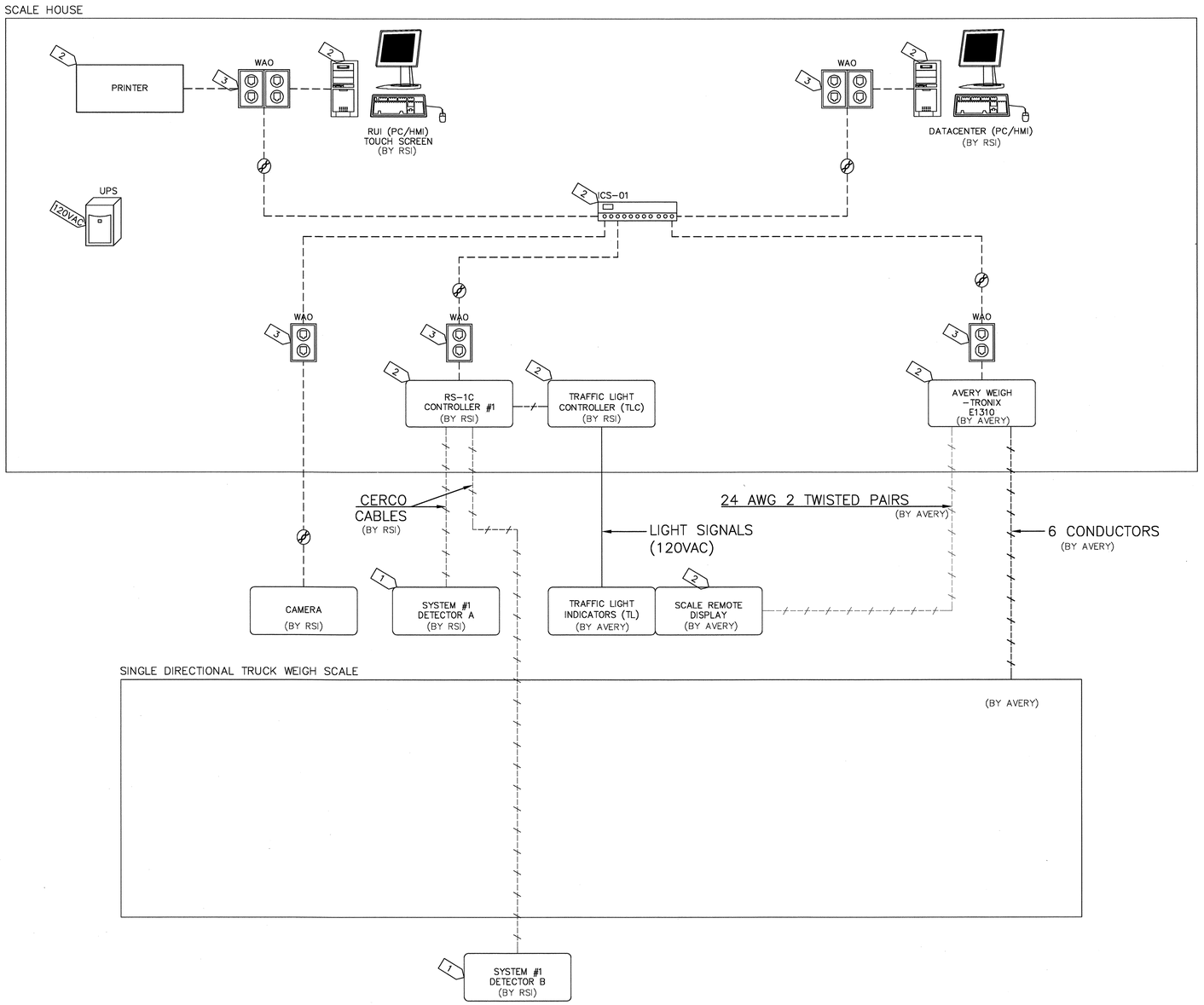

LEGEND

- NEW OR UPGRADED
- PLANT BUILDING/AREAS
- ENCLOSURES/PANELS/CABINETS /CONSOLES
- COMMUNICATION CAT6 CABLE
- ETHERNET COPPER CONNECTION
- VENDOR SPECIFIC CABLE
- ETHERNET SWITCH, ALL COPPER PORTS
- WAO INDUSTRIAL WORK AREA OUTLET
- COMPUTER
- MONITOR
- KEYBOARD AND MOUSE
- UPS, UNINTERRUPTIBLE POWER SUPPLY

GENERAL NOTES:

1. TERMINATE AND TEST ALL CABLES AT BOTH ENDS.
2. VISIT SITE TO CONFIRM EXACT CABLE LENGTHS, CONDUIT LENGTHS AND CABLE TRAY LENGTHS REQUIRED.
3. LABELING OF STRUCTURED CABLING AND ENCLOSURE ITEMS PROVIDED UNDER THIS SCOPE TO BE FINALIZED AT SHOP DRAWING REVIEW.
4. MOUNT ALL WORKSTATION WORK AREA OUTLETS ON THE WALL BESIDE THE WORKSTATION DESK AND THE ELECTRICAL OUTLET FOR THE DESK.
5. ALL COMPONENTS SHOWN ABOVE EXCEPT CAT6 CABLES AND WORK AREA OUTLETS ARE FREE ISSUED.
6. THIS DRAWING IS TYPICAL FOR TWO SCALE HOUSE SYSTEMS. ONE FOR INBOUND AND ONE FOR OUTBOUND.

KEY NOTES:

1. SENSORS ORIENTATION TO BE MOUNTED IN ACCORDANCE WITH THE MANUFACTURER WRITTEN INSTRUCTIONS AND THE FINAL TRUCK DRIVING THROUGH DIRECTION.
2. 120VAC POWER IS SUPPLIED BY THE SCALE HOUSE UPS.
3. PROVIDE CAT6 CABLE AS PER NUMBER OF WORK AREA OUTLETS.

AECL Project No. 4502-508120

Public Works and Government Services Canada
Travaux publics et Services gouvernementaux Canada

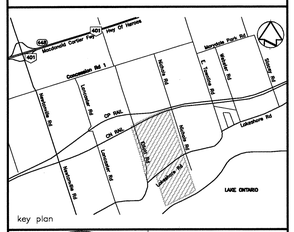

LICENSED PROFESSIONAL ENGINEER
A. N. MUSING
2014-11-11
PROVINCE OF ONTARIO

revision		date
04		
03		
02		
01	ISSUED FOR ADDENDUM 4	2014/11/12

Do not scale drawings.
Verify all dimensions and conditions on site and immediately notify the Departmental Representative of all discrepancies.

AECOM

This drawing has been prepared for the use of AECOM's client and may not be used, reproduced or relied upon by third parties, except as agreed by AECOM and its client, as required by law or for use by governmental reviewing agencies. AECOM accepts no responsibility, and denies any liability whatsoever, to any party that modifies this drawing without AECOM's express written consent.
Do not scale this document. All measurements must be obtained from stated dimensions.

project title / titre du projet
PORT GRANBY, ONTARIO
PORT HOPE AREA INITIATIVE

PORT GRANBY PROJECT
WASTE WATER TREATMENT PLANT

drawing title / titre du dessin
SCALE HOUSE NETWORK ARCHITECTURE

drawn by / dessine par: A.C.
designed by / conc par: A.C.
approved by / approuve par: A.M.
bid / offre
project manager / administrateur de projets
project date / date du projet: 2012-12-21
project no. / no. du projet: R.023276.212
drawing no. / dessine no.: WWTP-DI-35B