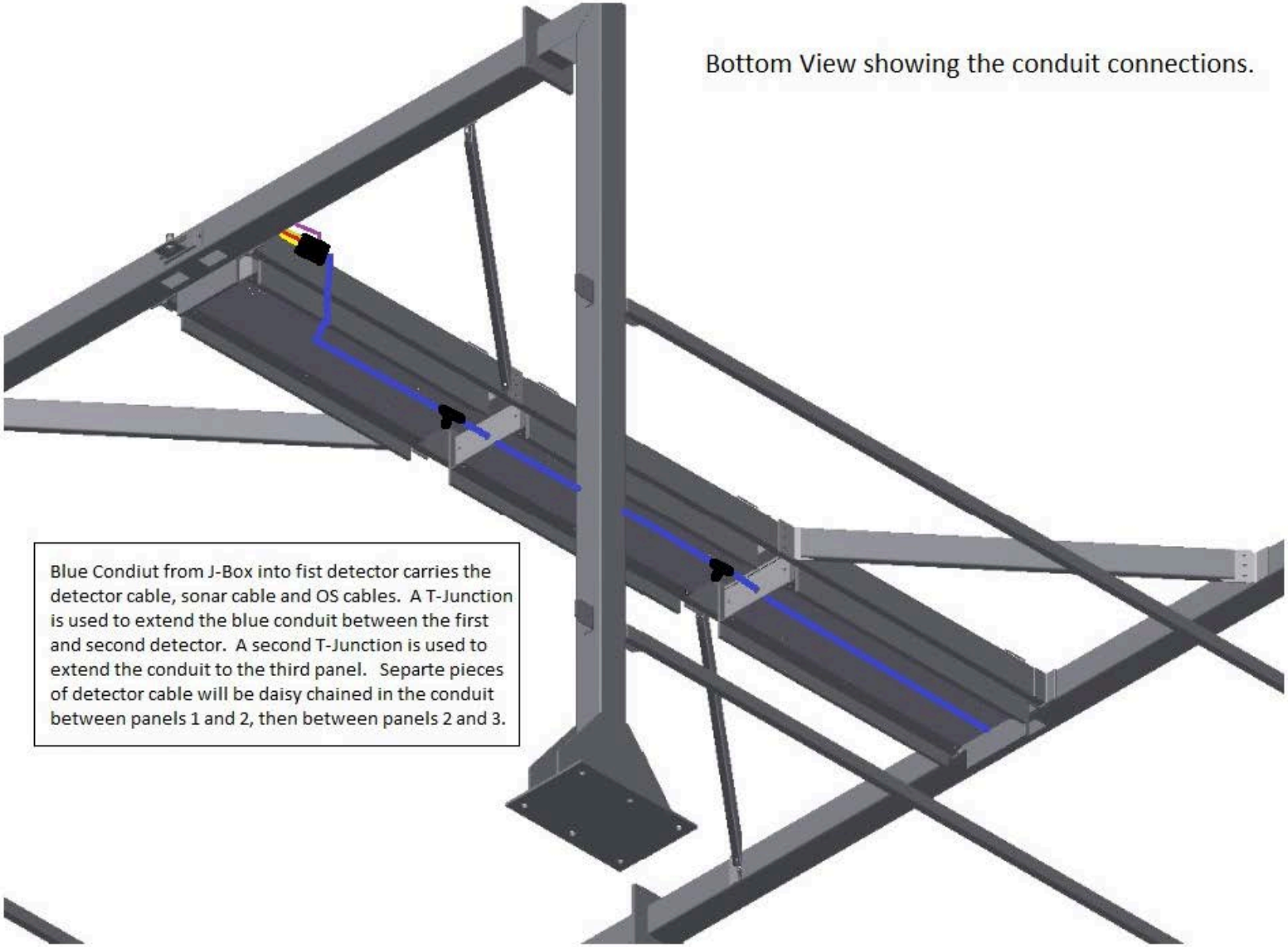
Bottom View showing the conduit connections.
Blue Condiut from J-Box into fist detector carries the detector cable, sonar cable and OS cables. A T-Junction is used to extend the blue conduit between the first and second detector. A second T-Junction is used to extend the conduit to the third panel. Separte pieces of detector cable will be daisy chained in the conduit between panels 1 and 2, then between panels 2 and 3.

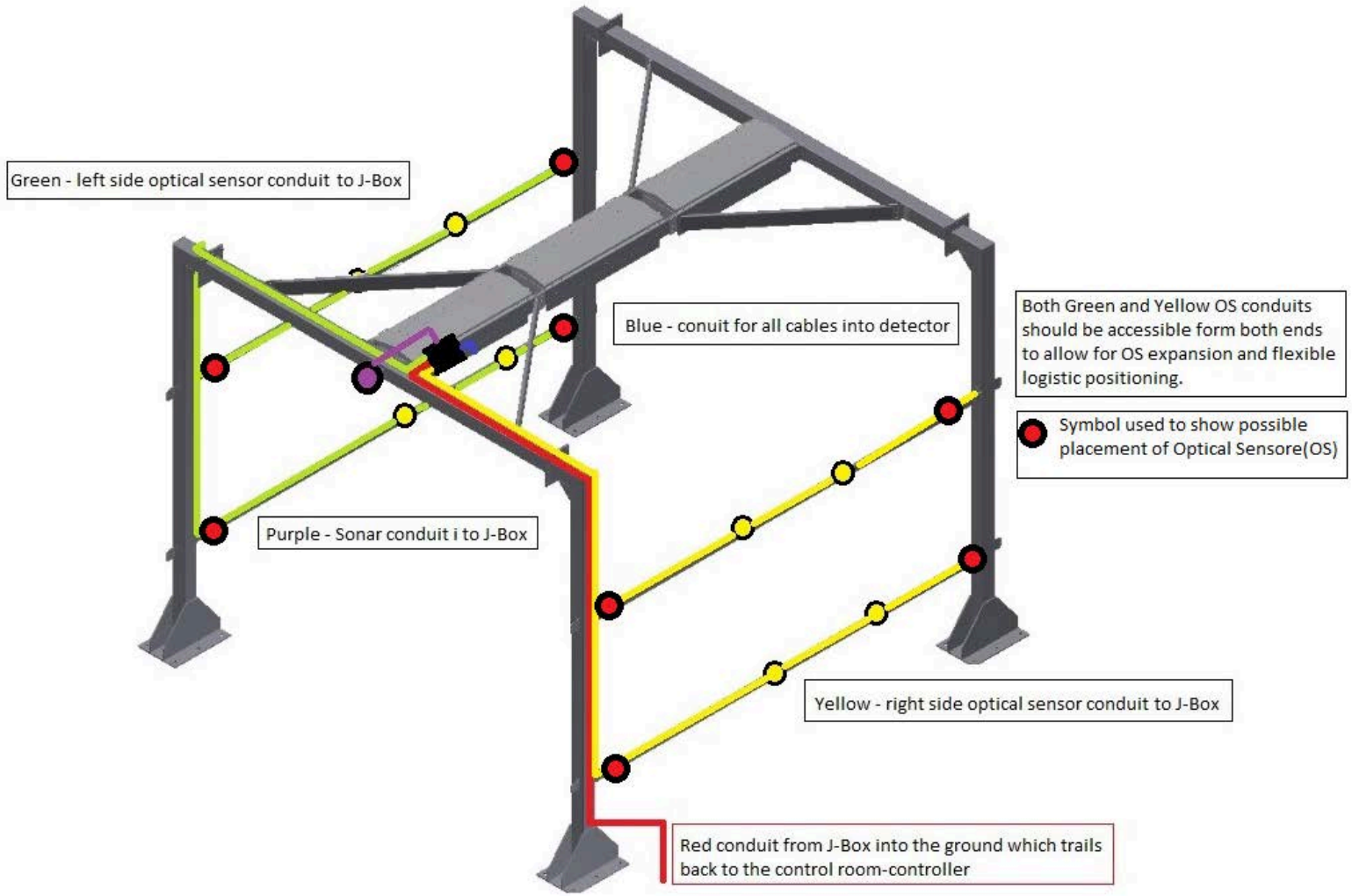

386 Watline Ave, Mississauga ♦ Ontario Canada L4Z 1X2 ♦ Tel (905) 890 1111 ♦ Fax (905) 890-1964 ♦ e-mail hovgaard@radiationsolutions.ca