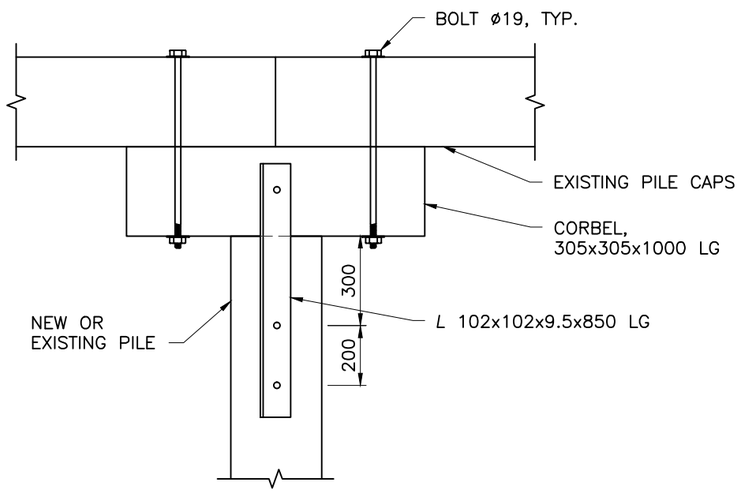

CORBEL – DETAIL
SCALE : 1:20
(REQUIRED FOR NEW AND EXISTING PILES AT JOINTS IN PILE CAP)

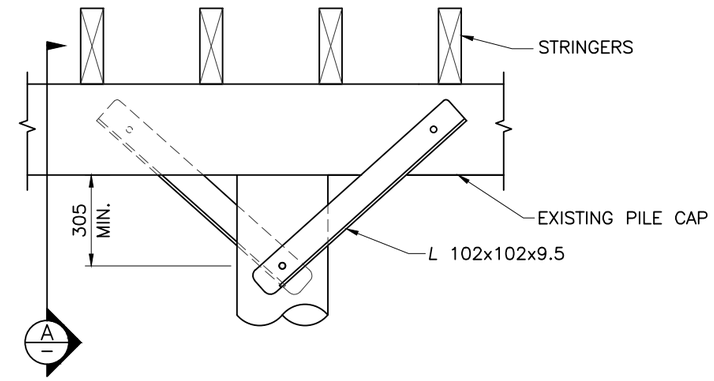

ELEVATION – CONNECTION OF NEW TIMBER PILES
SCALE : 1:20

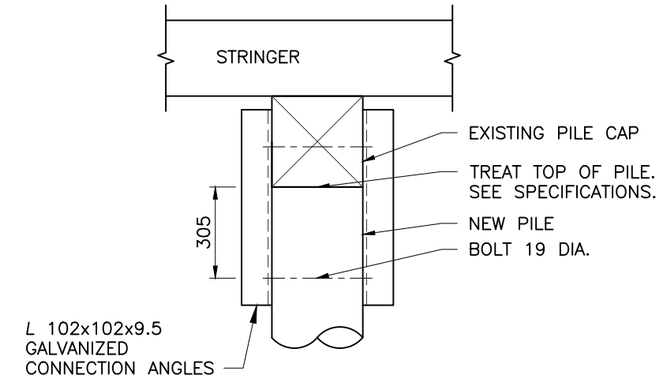

SECTION A
SCALE : 1:20

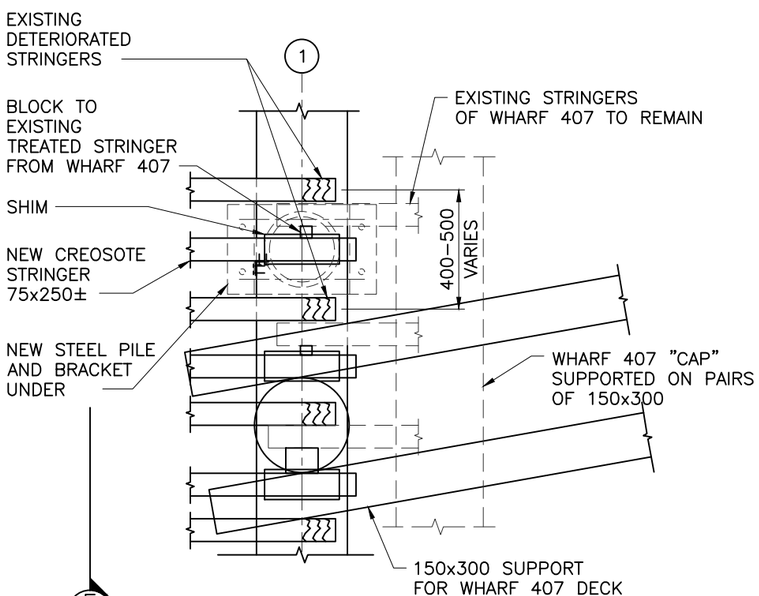

PLAN – NEW STRINGERS
SCALE : 1:20

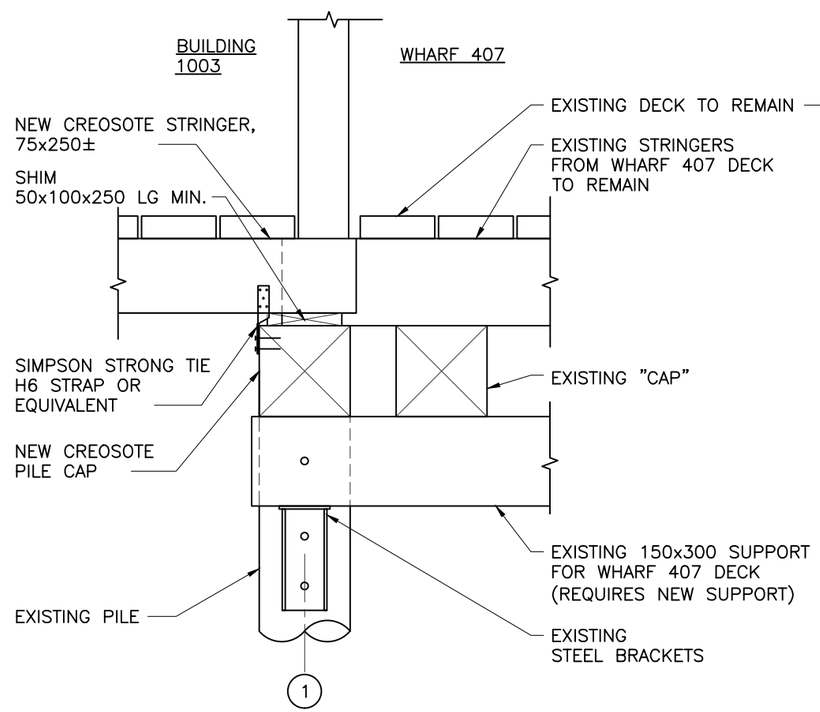

D SECTION
SCALE: 1:20

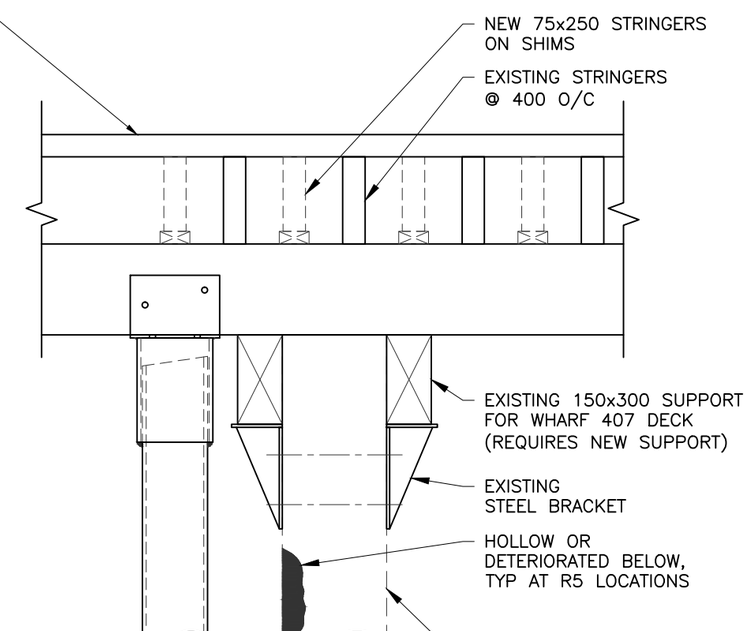

E SECTION
SCALE: 1:20

PORT EDWARD
BUILDING 1003
FOUNDATION REPAIRS
PHASE 2

A	FOR REVIEW	SEPT 2014

Revisions

COAST ISLE
ENGINEERING
LTD.

Title: R4 PILE CONNECTION TO PILE CAP AND STRINGER DETAILS
Client: DFO/SCH
Scale: AS NOTED
Drwn: R.R. Chkd: J.T. Dwg: E796–05 Rev: A
Date: JULY 2013

Wednesday, November 12, 2014 7:30:27 AM