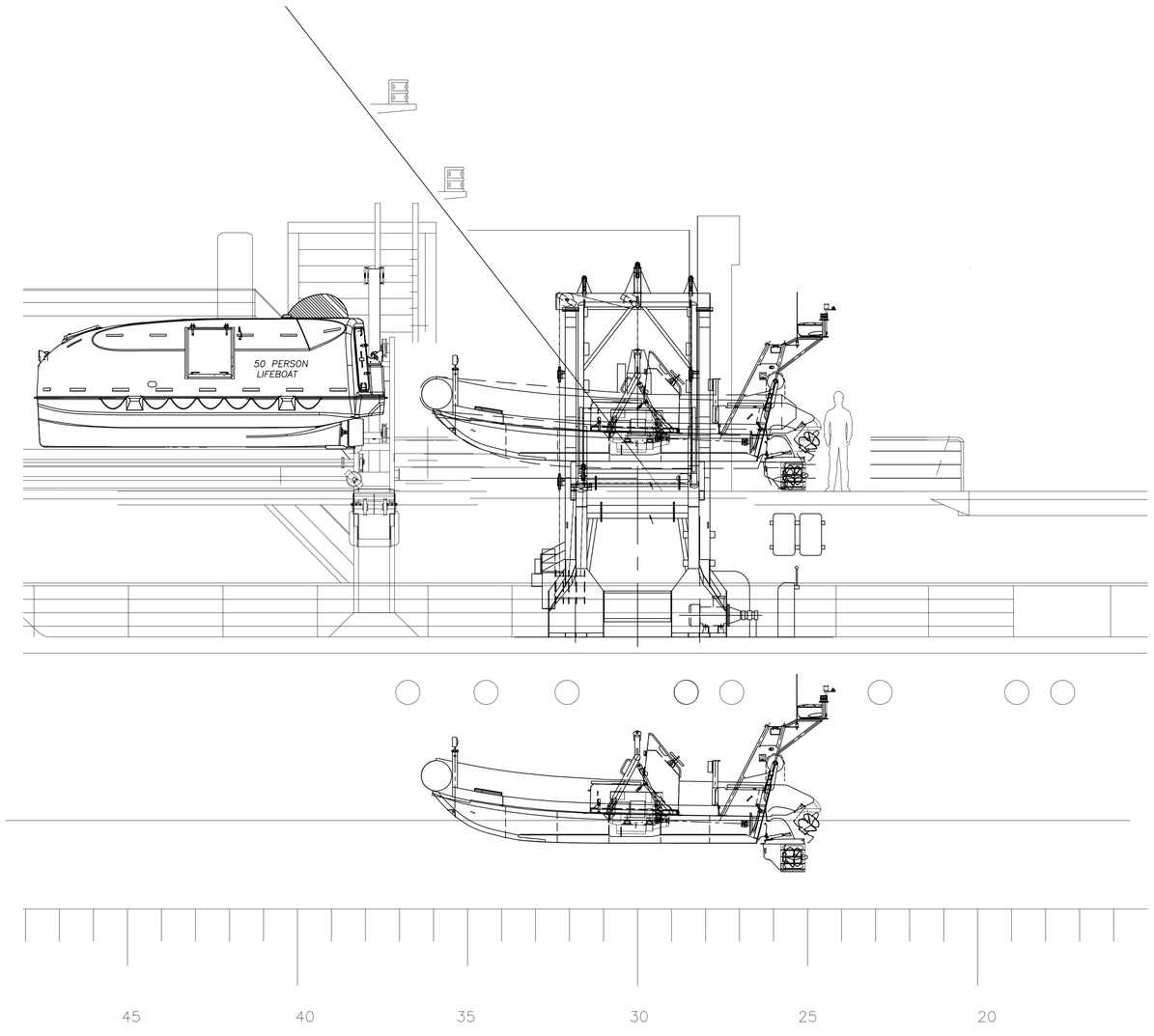

ELEVATION

PORT SIDE LOOKING TO PORT

NOTES

ALL DIMENSIONS IN MM

No.	Description	Date

REVISIONS

Consultant

Barclay Associates Ltd.

75 O'Leary Avenue
St. John's, NL
A1B 2C7

Drawn by AB	Developed by AB
Checked by	Date
Approved by	Date
Scale 1:50	

PROJECT

C.C.G.S. "LEONARD J COWLEY

PORT SIDE

MIRANDA DAVIT INSTALLATION

CANADIAN COAST GUARD

DRAWING TITLE

General Arrangement
Sheet One

SHT 01 OF 04	PLOT DATE: Jan 04 2014
PROJECT NO.	DRAWING NO.
102-05	102-05-01 REV 01