Project Title SCARBOROUGH, ONTARIO
HEALTH CANADA BUILDING
2301 MIDLAND AVENUE
CFIA GTA LABORATORY EXPANSION AND FIT-UP

ISSUED FOR TENDER

Project Number R.061999.001

Project Date 2014-12-19

ONTARIO ASSOCIATION OF ARCHITECTS
Gail Littlewood
Dec 19, 2014
GAIL LITTLEWOOD
LICENCE
4054

REGISTERED PROFESSIONAL ENGINEER
D. C. M. BELLAMY
PROVINCE OF ONTARIO

END

SUMMARY

END

PART 1 - GENERAL

1.1 DRAWINGS AND SCHEDULES

.1 The Drawings and Schedules, appended to this Section, that the Bid and Contract Documents are based upon include the following:

.1 Drawing list: A full list of Drawings including all disciplines can be found in Architectural Drawing A-0.01 - List of Drawings Site Plan - Existing. Small scale drawings accompanying the Contract Drawings are as listed below.

.2 Schedule: A-201 - Room Finish Schedule.

.3 Schedule: A-202 - Room Finish Schedule Notes.

.4 Schedule: A-301 - Door and Frame Schedule.

.5 Drawing: A-302 - Door Elevations Schedule.

.6 Drawing: A-303 - Door Frame Details.

.7 Schedule: A-401 - Door Hardware Schedule.

.8 Schedule: A-402 - Door Hardware Notes.

.9 Schedule: A-501 - List of Existing and Proposed Equipment.

.10 Schedule: A-601 - List of New Casework.

.11 Schedule: A-602 - List of Relocated Casework.

PART 2 - PRODUCTS

2.1 NOT USED

.1 Not used.

PART 3 - EXECUTION

3.1 NOT USED

.1 Not used.

END

LEGEND:
ACT - ACOUSTICAL TILE ; **AGS** - ALUMINUM GLAZING SYSTEM; **BRK** - BRICK; **CONC BLK** - CONCRETE BLOCK; **CONC** - CONCRETE; **CPTT** - CARPET TILE; **CT** - CERAMIC TILE; EC - EPOXY COATING; **GBD** - GYPSUM BOARD; **PT** - PAINT; **RB** - RESILIENT BASE FOR CASEWORK CABINET; **VFC** - VINYL FACED CEILING TILE; **VSF** - VINYL SHEET FLOORING; **VFU** - VINYL FACED CEILING TILE; **GREY SHADED AREAS IN ROOMS** - EXISTNG NO CHANGE

PHASE 1

		Floor		Base		Walls								Ceiling			Remarks
						North		East		South		West					
Room No.	Room Name	Mat'l	Finish	Mat'l	Height	Mat'l	Finish	Mat'l	Finish	Mat'l	Finish	Mat'l	Finish	Mat'l	Finish	Height	
315	HC Lab	CONC	VSF-4	VSF-4	100mm	GBD	PT-4	GBD	EC-4	GBD	PT-4	GBD	PT-4	GBD	PT-4	2952mm	Existing flooring/ceiling to remain. Patch existing flooring.
316	Vestibule	CONC	VSF-4	VSF-4	100mm	GBD	EC-4	GBD	EC-4	GBD	EC-4	GBD	EC-4	GBD	EC-4	2952mm	Existing flooring/ceiling to remain. Patch existing flooring.
319	Corridor									CONC BLK	PT-6						Door opening filled in with concrete block to match existing ledge block
327	Sample Reception	CONC	VSF-6	VSF-6	100mm	GBD	EC-4	GBD	EC-4	GBD	EC-4	GBD	EC-4	VFC	-	2952mm	
328	Extraneous Lab	CONC	VSF-7	VSF-7	100mm	GBD	EC-4	GBD	EC-4	GBD	EC-4	GBD	EC-4	VFC	-	2952mm	
328A	Extraneous Lab	CONC	VSF-7	VSF-7	100mm	GBD	EC-4	GBD	EC-4	GBD	EC-4	GBD	EC-4	VFC	-	2952mm	
329	Open Workstations	CONC	CPTT-1	-	-	GBD	PT-4	GBD	PT-4	-	-	CONC BLK	PT-6	ACT	-	2952mm	Existing carpet tiles to be reinstalled once work is complete. Existing ACT ceiling to remain.
336	Quiet Room	CONC	CPTT-1	-	-	-	-	GBD	PT-4	BRK	-	-	-	ACT	-	2952mm	Existing carpet tiles to be reinstalled at the end of Phase 3. Existing ACT ceiling to remain.
337	Microscopy Room	CONC	VSF-7	VSF-7	100mm	CONC BLK	CT	BLK/ GBD	CT/EC*	CONC BLK	CT	CONC BLK	CT	VFC	-	2952mm	Existing ceiling/grid to remain. Ceramic wall tiles to remain. *Existing GBD above windows to remain and be painted with Epoxy.

PHASE 2

		Floor		Base		Walls								Ceiling			Remarks
						North		East		South		West					
Room No.	Room Name	Mat'l	Finish	Mat'l	Height	Mat'l	Finish	Mat'l	Finish	Mat'l	Finish	Mat'l	Finish	Mat'l	Finish	Height	
319	Corridor									CONC BLK	PT-6						Door opening filled in with concrete block to match existing ledge block
323	Incubator Room	CONC	VDF-6	VSF-6	100mm	GBD	EC-4	GBD	EC-4	GBD	EC-4	GBD	EC-4	GBD	EC-4	2952mm	
325	Microbiology Lab	CONC	VDF-6	VSF-6	100mm	GBD	EC-4	GBD	EC-4	GBD	EC-4	GBD	EC-4	GBD	EC-4	2952mm	
335	Link	CONC	VDF-6	VSF-6	100mm	-	CT	-	CT	-	CT	-	CT	VFU	-	Exist	Existing ceiling to remain
355	Vestibule	CONC	VSF-3	VSF-3	100mm	GBD	PT-4	GBD	PT-4	GBD	PT-4	GBD	PT-4	VFU	-	2952mm	Existing flooring/ceiling to remain.
355A	Pre PCR Lab	CONC	VSF-3	VSF-3	100mm	GBD	PT-4	GBD	PT-4	GBD	PT-4	GBD	PT-4	VFU	-	2952mm	Existing flooring/ceiling to remain.
355B	Extraction Room Lab	CONC	VSF-3	VSF-3	100mm	GBD	PT-4	GBD	PT-4	GBD	PT-4	GBD	PT-4	VFU	-	2952mm	Existing flooring/ceiling to remain.
355C	Post PCR Lab	CONC	VSF-3	VSF-3	100mm	GBD	PT-4	GBD	PT-4	GBD	PT-4	GBD	PT-4	VFU	-	2952mm	Existing flooring/ceiling to remain.

LEGEND:
ACT - ACOUSTICAL TILE ; **AGS** - ALUMINUM GLAZING SYSTEM; **BRK** - BRICK; **CONC BLK** - CONCRETE BLOCK; **CONC** - CONCRETE; **CPTT** - CARPET TILE; **CT** - CERAMIC TILE; EC - EPOXY COATING; **GBD** - GYPSUM BOARD; **PT** - PAINT; **RB** - RESILIENT BASE FOR CASEWORK CABINET; **VFC** - VINYL FACED CEILING TILE; **VSF** - VINYL SHEET FLOORING; **VFU** - VINYL FACED CEILING TILE; **GREY SHADED AREAS IN ROOMS** - EXISTNG NO CHANGE

PHASE 3

		Floor		Base		Walls								Ceiling			Remarks
						North		East		South		West					
Room No.	Room Name	Mat'l	Finish	Mat'l	Height	Mat'l	Finish	Mat'l	Finish	Mat'l	Finish	Mat'l	Finish	Mat'l	Finish	Height	
317	Corridor	CONC	VSF-6	VSF-6	100mm	GBD	EC-4	GBD	EC-4	GBD	EC-4	GBD	EC-4	GBD	EC-4	2952mm	Partly new GBD ceiling.
317A	Biohazard Room	CONC	VSF-6	VSF-6	100mm	GBD	EC-4	GBD	EC-4	GBD	EC-4	GBD	EC-4	GBD	EC-4	2952mm	Existing flooring to remain.
317B	Method Development	CONC	VSF-6	VSF-6	100mm	GBD	EC-4	GBD	EC-4	GBD	EC-4	GBD	EC-4	GBD	EC-4	2952mm	Existing flooring to remain.
319	Corridor									CONC BLK	PT-6						Door opening filled in with concrete block to match existing ledge block
321	Transfer Lab	CONC	VSF-1	VSF-1*	100mm	GBD	EC-4	GBD	EC-4	GBD	EC-4	GBD	EC-4	GBD	EC-4	2952mm	Existing flooring/ceiling to remain. Reuse existing removed orange floor finish from other rooms for cove installation and repairs
341	Chemistry Lab	CONC	VSF-3	VSF-3	100mm	CONC BLK	PT-4	CONC BLK	PT-4	CONC BLK	PT-4	GBD	EC-4	VFU	-	2952mm	Existing flooring/ceiling to remain.
342	Canning Lab	CONC	VSF-3	VSF-3	100mm	CONC BLK	PT-4	GBD	EC-4	CONC BLK	PT-4	CONC BLK	PT-4	VFU	-	2952mm	Existing flooring/ceiling to remain.
345	Media Preparation Lab	CONC	VSF-2	VSF-2	100mm	CONC BLK	PT-4	CONC BLK	PT-4	CONC BLK	PT-4	CONC BLK	PT-4	GBD	PT-4	2952mm	Existing flooring/ceiling to remain.
347	Wash-Up	CONC	VSF-2	VSF-2	100mm	CONC BLK	PT-4	CONC BLK	PT-4	CONC BLK	PT-4	CONC BLK	PT-4	GBD	PT-4	2952mm	Existing flooring/ceiling to remain.

Notes:

1. Provide cove base, 100 mm up wall from continuation of vinyl sheet flooring surrounding perimeter of room. Provide rubber cove base around all lab casework bases.
2. Provide rubber cove base around all lab casework bases. Replace where existing casework is moved or relocated.
3. Paint existing gypsum board and metal convectors to match existing.
4. Install vinyl sheet flooring throughout room prior to installing lab casework.
5. Paint interior window frames to match door frame within room/corridor

Drawing No. A-202

Interior Colour and Finish Schedule Notes

Material	Colour Identifcation	Description
Paint	PT-1	(Door and Frame) P567-3 Brick Dust by Para Paints (Orange)
	PT-2	(Door and Frame) P1672-2 Delphinium by Para Paints (Blue)
	PT-3	(Door and Frame) P1132-1 Tall Prairie Grass by Para Paints (Green)
	PT-4	(Main Walls) P813-4 Moselle by Para Paints
	PT-5	(Door and Frame) Colour to Match Existing (Lab Perimeter Doors) Facing Corridor side.
	PT-6	Colour to match Existing (Lab Perimeter Walls)
	PT-7	White to match existing ACU
	PT-8	(Door and Frame) 3519 Lovely Lisa 30YY 70/455, by ICI Paints (Yellow)
	EC-1	Epoxy coating colour to match PT-1
	EC-4	Epoxy coating colour to match PT-4
	EC-8	Epoxy coating colour to match PT-8
Acoustic Unit Panels	ACU	White, to match existing ACU
Acoustic Ceiling Tile	ACT	White, to match existing ACT or reuse existing ACT salvage
Vinyl Faced Ceiling Tile	VFC	White, Clean Room VL (Nonperforated) by Armstrong (610x1220x16mm; cut to suit)
Carpet Tile	CPTT-1	Existing - 307 Outback, Graph 2 by Milliken Contract, 1mx1m modular carpet with Comfort Plus cushion
Vinyl Sheet Flooring	VSF-1	Existing - 5004 Camel, Mipolam Esprit 500 by Gerflor (Orange)
	VSF-2	Existing - 5016 Baltic Blue, Mipolam Esprit 500 by Gerflor (Blue)
	VSF-3	Existing - 5017 Yellow Green, Mipolam Esprit 500 by Gerflor (Green)
	VSF-4	Existing - Camel to remain
	VSF-5	Existing - Vinyl Sheet Floor (Light Grey)
	VSF-6	5332 Turmeric, Mipolam Espirit by Gerflor (Yellow)
	VSF-7	5303 Mixbeige, Mipolam Espirit by Gerflor (Beige)
Wall Cove Base (Vinyl Sheet Floor)		To be continuous of vinyl sheet flooring within room
Resilient Base	RB-1	Rubber cove base, RWDC-38-C, Colour Pewter CG, by Johnsonite. To cover base of new casework.
Transition Strip	T-1	To match carpet tile flooring. Colour to be selected by Architect.

General Notes:

1. Manufacturer's trade names and materials are to establish pattern, colour and texture only. The Architect does not intend that these trade named materials for the sole source for materials to be used on this project. Other manufacturers meeting the material quality requirements specified are acceptale providing the patterns, colours and textures are within reasonable limits of that noted and as determined by the Architect. Submit colours, patterns and textures in accordance with Section 01330 and 01780.

2. Make good existing room finishes where disturbed by work of this Contract, to match existing, unless otherwise noted.
3. Repaint existing surfaces as noted in Room Finish Schedule and Door and Frame Schedule.
4. Paint metal electrical panels, metal wall grilles and metal covers to match adjacent wall colour.
5. Retain VSF-1 and VSF-4 where removed. Reuse for repairs to floor and coves in other rooms with same flooring.

Door and Frame Schedule **Drawing No. A-301**

DOOR & FRAME ABBREVIATIONS:
HM - HOLLOW METAL; **PL** - PLASTIC LAMINATE; **PT** - PAINT; **WG** - WIRED GLASS; **WD** - WOOD

GREY SHADED DOORS - EXISTING TO REMAIN

NOTE NO. 1 New Door & Frame: Verify dimensions of opening on site. Frame detail similar to grout filled frame on frame detail 3 on drawing A-303.

SPECIALTY HARDWARE ABBREVIATIONS:
ECA - EXISTING CARD ACCESS; **NCA** - NEW CARD ACCESS; **EDAS** - EXISTING DOOR ACTIVATION SWITCH; **EKY** - EXISTING KEY PAD

Door Elevations refer to A-302
Frame Type/Details refer to A-303
Finishes & Colours refer to A-202
Existing doors to be removed, refer to Dwgs A-2.04 & A-2.05 Enlarged Floor Plan Deconstruction
Door Paint Colours -1st Room-top paint colour; 2nd Room-bottom paint colour

PHASE 1

		Frame					Door							
Door No.	Location	Type	Mat'l	Finish	Detail Ref.	Fire Rating (Hrs)	Size (mm)	Type	Mat'l	Finish	Glass	Door Fire Resistance Rating (Hours)	Specialty Hardware	Remarks
315	Corridor (319) to Health Canada Lab (315)	TYPE 2	HM	-	-	1.5	-	TYPE 1E	-	PL	WG	1.0	ECA	Existing door and leaf to remain
315A	Corridor (319) to Health Canada Lab (315)	TYPE 2	HM	-	-	1.5	-	TYPE 1E	-	PL	WG	1.0	ECA	Existing door and leaf to remain
315B	Corridor (319) to Vestibule (316)	TYPE 2	HM	-	-	1.5	-	TYPE 1E	-	PL	WG	1.0	ECA	Exist. Door & Frame to be removed
316	Health Canada Lab (315) to Vestibule (316)	TYPE 1	HM	EC-1 EC-1	-	-	915mm x 2083mm 305mm x 2083	TYPE 1	HM	EC-1 EC-1	WG	0	-	New Door, Leaf and Frame
317C	Vestibule (316) to Corridor (317)	TYPE 1	HM	EC-1 EC-8	-	-	915mm x 2083mm 305mm x 2083	TYPE 1	HM	EC-1 EC-8	WG	0	-	New Door, Leaf and Frame
325A	Sample Reception (327) to Microbiology Lab (325)	TYPE 1	HM	EC-8 EC-8	-	0.75	915mm x 2083mm 305mm x 2083	TYPE 1	HM	EC-8 EC-8	WG	0.75	-	New Door, Leaf and Frame
327	Corridor (319) to Sample Reception (327)	TYPE 1	HM	PT-5 EC-8	-	0.75	915mm x 2083mm 305mm x 2083	TYPE 1	HM	PT-5 EC-8	WG	0.75	NCA	New Door, Leaf and Frame
328	Sample Reception (327) to Extraneous Lab (328)	TYPE 1	HM	EC-8 EC-8	-	0.75	915mm x 2083mm 305mm x 2083	TYPE 1	HM	EC-8 EC-8	WG	0.75	-	New Door, Leaf and Frame
328A	Open Workstation (329) to Extraneous Lab (328A)	TYPE 1	HM	PT-5 EC-8	-	0.75	915mm x 2083mm 305mm x 2083	TYPE 1	HM	PT-5 EC-8	WG	0.75	NCA	New Door, Leaf and Frame
335	Microscopy Room (337) to Link Corridor (335)	TYPE 3	HM	EC-1 EC-1	-	1.5	762mm x 2108mm	TYPE 2	HM	EC-1 EC-1	WG	1.5	-	New Door & Frame-refer to Note No. 1 above.
336	Corridor (333) to Quiet Room (336)	-	-	-	-	-	-	-	-	-	-	-	-	Existing door to remain
336A	Open Workstations (329) to Quiet Room (336)	-	-	-	-	-	-	-	-	-	-	-	-	Existing door to remain and be sealed off.
337	Corridor (333) to Microscopy Room (337)	TYPE 2	HM	-	-	1.5	-	TYPE 1E	WD	-	WG	-	NCA	Existing door and leaf to remain
337A	Extraneous Lab (328A) to Microscopy Room (337)	TYPE 2	HM	EC-8 EC-8	-	0.75	915mm x 2083mm	TYPE 3	HM	EC-8 EC-8	WG	0.75	-	New Door & Frame
366A	Vestibule (316) to Link Corridor (366)	-	-	-	-	-	-	-	-	-	-	1.5	EDAS	Existing door to remain, EDAS control button to be relocated as shown on the drawings.

PHASE 2

		Frame					Door							
Door No.	Location	Type	Mat'l	Finish	Detail Ref.	Fire Rating (Hrs)	Size (mm)	Type	Mat'l	Finish	Glass	Door Fire Resistance Rating (Hours)	Specialty Hardware	Remarks
323	Transfer Lab (321) to Incubator Room (323)	TYPE 1	HM	EC-1 EC-8	-	-	915mm x 2083mm 305mm x 2083	TYPE 1	HM	EC-1 EC-8	WG	-	-	New Door, Leaf and Frame
325	Corridor (319) to Microbiology Lab (325)	-	-	-	-	-	-	TYPE 1E	-	-	-	-	-	Exist. Door, Leaf & Frame to be removed

Door and Frame Schedule **Drawing No. A-301**

DOOR & FRAME ABBREVIATIONS:
HM - HOLLOW METAL; **PL** - PLASTIC LAMINATE; **PT** - PAINT; **WG** - WIRED GLASS; **WD** - WOOD

GREY SHADED DOORS - EXISTING TO REMAIN

NOTE NO. 1 New Door & Frame: Verify dimensions of opening on site. Frame detail similar to grout filled frame on frame detail 3 on drawing A-303.

SPECIALTY HARDWARE ABBREVIATIONS:
ECA - EXISTING CARD ACCESS; **NCA** - NEW CARD ACCESS; **EDAS** - EXISTING DOOR ACTIVATION SWITCH; **EKY** - EXISTING KEY PAD

Door Elevations refer to A-302
Frame Type/Details refer to A-303
Finishes & Colours refer to A-202
Existing doors to be removed, refer to Dwgs A-2.04 & A-2.05 Enlarged Floor Plan Deconstruction
Door Paint Colours -1st Room-top paint colour; 2nd Room-bottom paint colour

325A	Corridor (319) to Microbiology Lab (325)	TYPE 2	HM	PT-5 EC-8	-	-	-	-	HM	PT-5 EC-8	-	1.5	ECA	Exist. Door, Leaf & Frame to remain
325B	Incubator Room (323) to Microbiology Lab (325)	TYPE 1	HM	EC-8 EC-8	-	-	915mm x 2083mm 305mm x 2083	TYPE 1	HM	EC-8 EC-8	WG	-	-	New Door, Leaf and Frame
335A	Microbiology Lab (325) to Link Corridor (335)	TYPE 3	HM	EC-1 EC-1	-	1.5	762mm x 2184mm	TYPE 2	HM	EC-1 EC-1	WG	1.5	-	New Door & Frame-refer to Note No. 1 above.
355	Corridor (333) to Vestibule (355)	-	HM	-	-	1.5	-	-	HM	-	-	1-1.5	-	Existing door to remain
355A	Vestibule (355) to Pre PCR Lab (355A)	-	-	-	-	-	-	-	-	-	-	-	-	Existing door to remain
355B	Vestibule (355) to Extraction Room Lab (355B)	-	-	-	-	-	-	-	-	-	-	-	-	Existing door to remain
355B1	Vestibule (347A) to Extraction Room Lab (355B)	-	-	-	-	-	-	-	-	-	-	-	-	Existing door to remain
355C	Vestibule (355) to Post PCR Lab (355C)	-	-	-	-	-	-	-	-	-	-	-	-	Existing door to remain
366	Vestibule (347A) to Link (366)	-	HM	-	-	-	-	-	HM	-	-	1-1.5	-	Existing door to remain

PHASE 3

		Frame					Door							
Door No.	Location	Type	Mat'l	Finish	Detail Ref.	Fire Rating (Hrs)	Size (mm)	Type	Mat'l	Finish	Glass	Door Fire Resistance Rating (Hours)	Specialty Hardware	Remarks
317	Corridor (319) to Corridor (317)	-	HM	-	-	1.5	-	Type 1E	-	PL	WG	1.0	NCA	Existing door, leaf & frame to remain
317A	Corridor (317) to Biohazard (317A)	TYPE 1	HM	EC-8 EC-8	-	-	915mm x 2083mm 305mm x 2083	TYPE 1	HM	EC-8 EC-8	WG	-	-	New Door, Leaf and Frame. Exist. Dble Door & Frame to be Removed
317B	Corridor (317) to Method Development (317B)	TYPE 1	HM	EC-8 EC-8	-	-	915mm x 2083mm 305mm x 2083	TYPE 1	HM	EC-8 EC-8	WG	-	-	New Door, Leaf and Frame. Exist. Dble Door & Frame to be Removed
317C	Microbiology (321) to Identification (317)	TYPE 2	HM	-	-	-	-	TYPE 1E	WD	-	-	-	-	Existing Door, Leaf and Frame to be removed.
321	Corridor (319) to Transfer Lab (321)	-	-	-	-	1.5	-	-	-	PL	WG	1.0	ECA	Existing door, leaf & frame to remain
323A	Corridor (319) to Transfer Lab (321)	TYPE 2	HM	-	-	1.5	-	TYPE 1E	-	PL	-	-	-	Exist. Door, Leaf & Frame to be Removed
341	Corridor (333) to Chemistry Lab (341)	TYPE 2	HM	-	-	1.5	-	TYPE 1E	-	PL	-	1.0	ECA	Existing door & frame to remain
342	Corridor (333) to Canning Lab (341)	TYPE 2	HM	-	-	1.5	-	TYPE 1E	-	PL	-	1.0	EKY	Existing door & frame to remain
342A	Chemistry Lab (341) to Canning Lab (341)	TYPE 1	HM	PT-3 PT-3	-	0.75	915mm x 2083mm	TYPE 3	HM	PT-3 PT-3	WG	0.75	-	New Door & Frame
345	Corridor (333) to Media Preparation Lab (345)	TYPE 2	HM	-	-	1.5	-	TYPE 1E	-	PL	WG	1.0	ECA	Existing door & frame to remain
345A	Corridor (333) to Media Preparation Lab (345)	TYPE 2	HM	-	-	1.5	-	TYPE 1E	-	PL	WG	1.0	ECA	Existing door & frame to remain
347	Corridor (333) to Wash-Up (347)	TYPE 2	HM	-	-	1.5	-	TYPE 1E	-	PL	WG	1.0	ECA	Existing door & frame to remain
347A	Wash-Up (347) to Vestibule (347A)	TYPE 2	HM	-	-	1.5	-	TYPE 1E	-	PL	WG	1.0	-	Existing door & frame to remain
368	Media Preparation Lab (345) to Link Corridor (368)	-	-	-	-	-	-	-	-	-	-	1.0	EDAS	Existing door & frame to remain
368A	Transfer Lab (321) to Link Corridor (368)	-	-	-	-	-	-	-	-	-	-	1.0	-	Existing door & frame to remain

Public Works and Government Services Canada

Travaux publics et Services gouvernementaux Canada

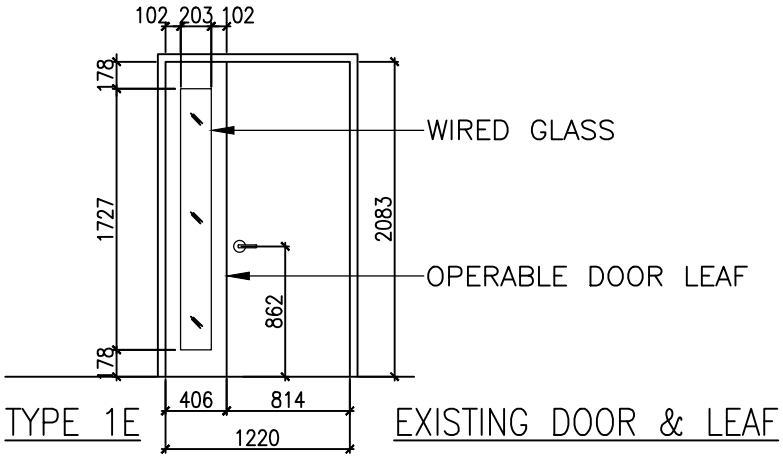

TYPE 1E EXISTING DOOR & LEAF

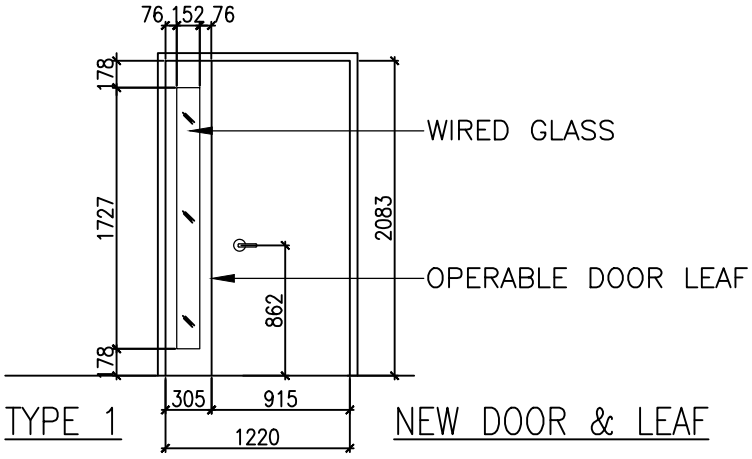

TYPE 1 NEW DOOR & LEAF

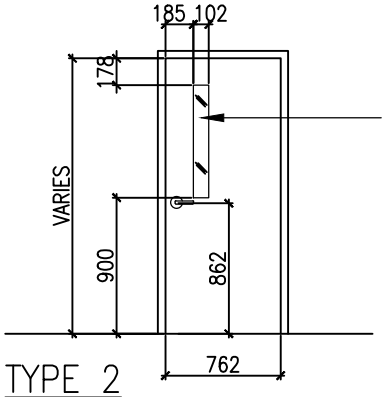

TYPE 2
NEW DOOR

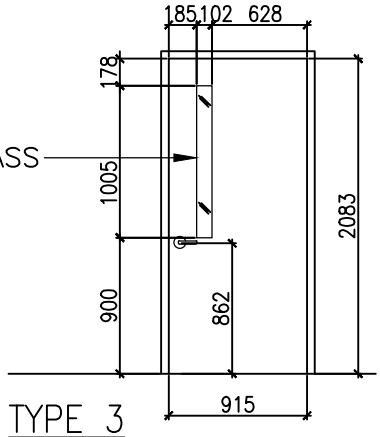

TYPE 3
NEW DOOR

WIRED GLASS

0 1m 5m

Project title: SCARBOROUGH CFIA HEALTH CANADA BUILDING 2301 MIDLAND AVENUE CFIA GTA LABORATORY	Drawing title: DOOR SCHEDULE	Drawing no.: A–302
		Project no.: R.061999.001
	Designed by : GL / Bid: D. MAVROUDIS	Project date : 2014–12–19
	Drawn by : LK/ RKP	Date plotted : 2014–12–19
	Approved by : / Plot scale : 1:50	Cadd file :

GSC–A4A2

Public Works and Government Services Canada

Travaux publics et Services gouvernementaux Canada

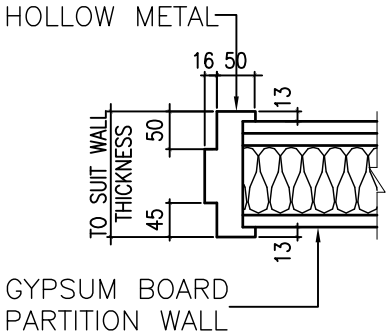

FRAME 1

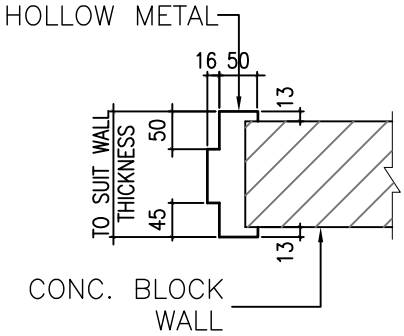

FRAME 2

SAMPLE RECEPTION

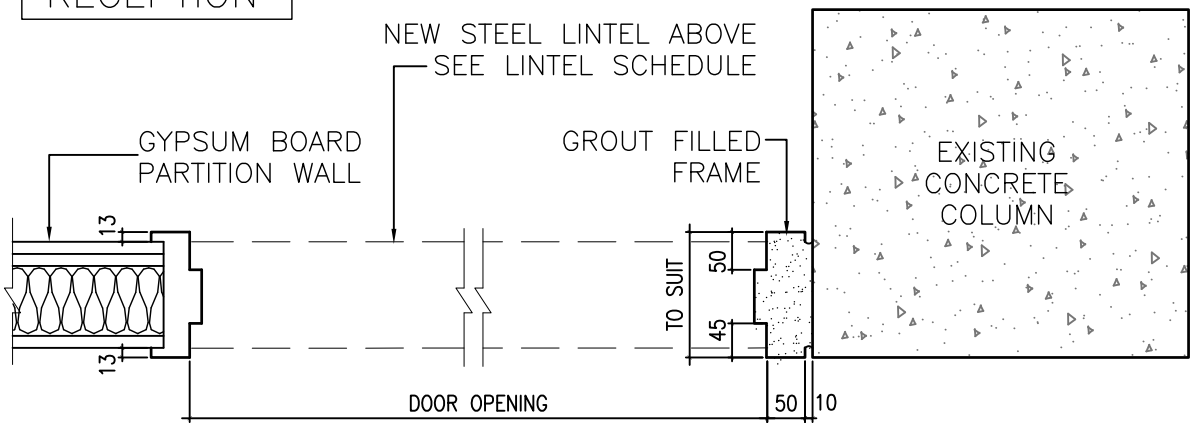

EXTRANEOUS LAB

FRAME 3

0 0.1m 0.5m 1m

Project title: SCARBOROUGH CFIA HEALTH CANADA BUILDING 2301 MIDLAND AVENUE CFIA GTA LABORATORY	Drawing title: DOOR FRAME DETAILS	Drawing no.: A–303
		Project no.: R.061999.001
	Designed by : GL / Bid: D. MAVROUDIS	Project date : 2014–09–30
	Drawn by : LK/ RKP	Date plotted : 2014–12–08
	Approved by : / Plot scale : 1:10	Cadd file :

GSC–A4A2

Door Hardware Schedule **Drawing No. A-401**

HARDWARE ABBREVIATIONS:
AD - AUTOMATIC DOOR BOTTOM SEAL; **AS** - ASTRAGAL; **CR** - CARD READER; **DAS** - DOOR ACTIVATION SWITCH; **DC** - DOOR CLOSER; **DCT** - DOOR CONTACT; **ES** - ELECTRIC STRIKE; **FDS** - FLOOR DOOR STOP; **H** - HINGE; **KP** - KICK PLATE; **LS** - LOCK & LATCH SET; **PS** - PASSAGE SET; **SB** - SURFACE BOLTS; **SS** - SMOKE SEAL GASKET; **ST** - STOREROOM FUNCTION

NOTE: EXISTING DOORS TO BE REMOVED, REFER TO DRAWINGS A-2.04 & A-2.05 ENLARGED FLOOR PLAN DECONSTRUCTION

GREY SHADE - EXISTING TO REMAIN

PHASE 1

		Hardware								
Door No.	Location	Hanging Devices	Locks	Security	Accessories	Closing Devices	Plates	Stops	Misc.	Remarks
315	Corridor (319) to Health Canada Lab (315)	-	-	-	-	-	-	-	-	Existing door to remain
315A	Corridor (319) to Health Canada Lab (315)	-	-	-	-	-	-	-	-	Existing door to remain
315B	Corridor (319) to Vestibule (316)	-	-	-	-	-	-	-	-	Existing door to be removed
316	Health Canada Lab (315) to Vestibule (316)	H	LS, ST, F86	-	AS, AD, SB, SS	DC	KP	FDS	-	New Door & Leaf
317C	Vestibule (316) to Corridor 317	H	PS, F75	-	AS, AD, SB, SS	DC	KP	FDS	-	New Door & Leaf
325A	Sample Reception (327) to Microbiology Lab (325)	H	PS F75	-	AS, AD, SB, SS	DC	KP	FDS	-	New Door & Leaf
327	Corridor (319) to Sample Reception (327)	H	LS, ST, F86	CR, ES, DCT	AS, AD, SB, SS	DC	KP	FDS	-	New Door & Leaf
328	Sample Reception (327 to Extraneous Lab (328)	H	PS F75	-	AS, AD, SB, SS	DC	KP	FDS	-	New Door & Leaf
328A	Open Workstation (329) to Extraneous Lab (328A)	H	LS, ST, F86	CR, ES, DCT	AS, AD, SB, SS	DC	KP	FDS	-	New Door & Leaf
335	Microscopy (337) to Link Corridor (335)	H	PS F75	-	AD, SS	DC	KP	FDS	-	New Door
336	Corridor (333) to Quiet Room (336)	-	-	-	-	-	-	-	-	Existing door to remain
336A	Open Workstations (329) to Quiet Room (336)	-	-	-	-	-	-	-	-	Existing door to remain. To be sealed off. Lever hardware removed and coverplate installed.
337	Corridor (333) to Microscopy (337)	H	LS, ST, F86	CR, ES, DCT	AD	DC	-	-	-	Existing door & leaf to remain
337A	Extraneous Lab (328A) to Microscopy (337)	H	PS F75	-	AD, SS	DC	KP	FDS	-	New Door
366A	Vestibule (316) to Link Corridor (366)	-	-	-	-	-	-	-	DAS	Existing door to remain. Existing DAS for Door 366A to be relocated as shown on drawings.

PHASE 2

		Hardware								
Door No.	Location	Hanging Devices	Locks	Security	Accessories	Closing Devices	Plates	Stops	Misc.	Remarks
323	Transfer Lab (321) to Incubator Room (323)	H	PS F75	-	AS, AD, SB, SS	-	KP	FDS	-	New Door & Leaf
325	Corridor (319) to Microbiology Lab (325)	-	-	-	-	-	-	-	-	Existing door and leaf to be removed
325A	Corridor (319) to Microbiology Lab (325)	-	-	-	-	-	-	-		Existing door and leaf to remain
325B	Incubator Room (323) to Microbiology Lab (325)	H	PS F75	-	AS, AD, SB, SS	-	KP	FDS	-	New Door & Leaf
335A	Microbiology Lab (325) to Link Corridor (335)	H	PS F75	-	AD, SS	DC	KP	FDS	-	New Door

Door Hardware Schedule **Drawing No. A-401**

HARDWARE ABBREVIATIONS:
AD - AUTOMATIC DOOR BOTTOM SEAL; **AS** - ASTRAGAL; **CR** - CARD READER; **DAS** - DOOR ACTIVATION SWITCH; **DC** - DOOR CLOSER; **DCT** - DOOR CONTACT; **ES** - ELECTRIC STRIKE; **FDS** - FLOOR DOOR STOP; **H** - HINGE; **KP** - KICK PLATE; **LS** - LOCK & LATCH SET; **PS** - PASSAGE SET; **SB** - SURFACE BOLTS; **SS** - SMOKE SEAL GASKET; **ST** - STOREROOM FUNCTION

NOTE: EXISTING DOORS TO BE REMOVED, REFER TO DRAWINGS A-2.04 & A-2.05 ENLARGED FLOOR PLAN DECONSTRUCTION

GREY SHADE - EXISTING TO REMAIN

355	Corridor (333) to Vestibule (355)	-	-	-	-	-	-	-	-	Existing door to remain
355A	Vestibule (355) to Pre PCR Lab (355A)	-	-	-	-	-	-	-	-	Existing door to remain
355B	Vestibule (355) to Extraction Room Lab (355B)	-	-	-	-	-	-	-	-	Existing door to remain
355B1	Vestibule (347A) to Extraction Room Lab (355B)	-	-	-	-	-	-	-	-	Existing door to remain
355C	Vestibule (355) to Post PCR Lab (355C)	-	-	-	-	-	-	-	-	Existing door to remain
366	Vestibule (347A) to Link (366)	-	-	-	-	-	-	-	-	Existing door to remain

PHASE 3

		Hardware								
Door No.	Location	Hanging Devices	Locks	Security	Accessories	Closing Devices	Plates	Stops	Misc.	Remarks
317	Corridor (319) to Corridor (317)	H	LS, ST, F86	CR, ES, DCT	AD	DC	-	-	-	Existing door and leaf to remain
317A	Corridor (317) to Biohazard (317A)	H	PS F75	-	AS, AD, SB, SS	DC	KP	FDS	-	New Door & Leaf
317B	Corridor (317) to Method Development (317B)	H	PS F75	-	AS, AD, SB, SS	DC	KP	FDS	-	New Door & Leaf
317C	Microbiology (321) to Ident (317)	-	-	-	-	-	-	-	-	Existing door and leaf to be removed
321	Corridor (319) to Transfer Lab (321)	-	-	-	-	-	-	-	-	Existing door and leaf to remain
323A	Corridor (319) to Transfer Lab (321)	-	-	-	-	-	-	-	-	Existing door and leaf to be removed
341	Corridor (333) to Chemistry Lab (341)	-	-	-	-	-	-	-	-	Existing door and leaf to remain
342	Corridor (333) to Canning Lab (342)	-	-	-	-	-	-	-	-	Existing door and leaf to remain
342A	Chemistry Lab (341) to Canning Lab (342)	H	PS F75	-	AD, SB, SS	-	KP	FDS	-	New Door
345	Corridor (333) to Media Preparation Lab (345)	-	-	-	-	-	-	-	-	Existing door and leaf to remain
345A	Corridor (333) to Media Preparation Lab (345)	-	-	-	-	-	-	-	-	Existing door and leaf to remain
347	Corridor (333) to Wash-Up (347)	-	-	-	-	-	-	-	-	Existing door and leaf to remain
347A	Wash-Up (347) to Vestibule (347A)	-	-	-	-	-	-	-	-	Existing door and leaf to remain
368	Media Preparation Lab (345) to Link Corridor (368)	-	-	-	-	-	-	-	-	Existing door and leaf to remain
368A	Transfer Lab (321) to Link Corridor (368)	-	-	-	-	-	-	-	-	Existing door and leaf to remain

Door Hardware Notes **Drawing No. A-402**

Abbreviations	Hardware Description	Notes
H	Hinges	Hinges - Grade 1
PS	Passage Set	Bored - Grade 1. Latch Bolt operate by lever from either side at all times. ANSI F75.
LS	Lock & Latch Set	Bored - Grade 1. Store room dead locking latch bolt. Operated by key in outside lever or by rotating inside lever. Ouside lever is always fixed. ANSI F86.
CR	Card Reader	
ES	Electric Strike	
DCT	Door Contact	
SS	Smoke Seal Gasket	For both door and leaf. Mount on push side.
AS	Astragal	Full height mounted on leaf.
AD	Automatic Door Bottom Seal	For both door and leaf. Mount on push side.
DC	Door Closer	
KP	Kick Plate	Mount on push side.
FDS	Floor Door Stop	
ST	Storeroom Function	ANSI F86 Dead locking latch bolt operated by key in outside lever or by rotating inside lever. Outside lever is always fixed.
SB	Surface Bolts	3/4" throw latch surface bolts mounted top and bottom on leaf

PART 1 - GENERAL

1.1 SECTION INCLUDES

.1 Title and description of Work.

.2 Contract Method.

.3 Work by others.

.4 Work sequence.

.5 Contractor use of premises.

.6 Partial Owner occupancy.

.7 Owner furnished items.

.8 Alterations to existing meeting.

.9 Additional project documentation.

1.2 PRECEDENCE

.1 For Federal Government projects, Division 01 Sections take precedence over technical specification sections in other Divisions of this Project Manual.

1.3 WORK COVERED BY CONTRACT DOCUMENTS

.1 Work of this Contract is entitled:

SCARBOROUGH, ONTARIO
HEALTH CANADA BUILDING
2301 MIDLAND AVENUE

CFIA GTA LABORATORY EXPANSION AND FIT-UP

.2 Work of this Project comprises the renovation of part of Level 3 laboratories, offices and rooms and removal, relocation, reinstallation and reconnection of existing lab casework and equipment as indicated, in phased work, located at 2301 Midland Avenue, Scarborough,Ontario, and further identified as PWGSC Project Number R.061999.001.

.3 Laboratories are to be designed to meet Biosafety Containment Level 2 (CL2).

1.4 CONTRACT METHOD

.1 Construct Work under lump sum contract.

1.5 COST BREAKDOWN

.1 Within one week of notification of acceptance of bid furnish a cost breakdown by Section aggregating contract price.

.2 Within 48 hours of acceptance of bid submit a list of subcontractors.

1.6 WORK BY OTHERS

.1 Work of this Project must include provisions for coordinating related work, identified in Contract Documents, for following principal items.
.1 Systems furniture.
.2 Security system and card readers by Underwriters Security Controls.
.3 Equipment certification representative.
.4 Data cabling Shared Services Canada.

.2 The Contractor shall for the purpose of the Ontario Occupational Health and Safety Act and Regulations for Construction Projects, and for the duration of the Work of the Contract:
.1 Assume the role of Constructor in accordance with the Authorities Having Jurisdiction.
.2 In the event of two or more Contractors working at the same time and space at the work site, without limiting the General Conditions GC3.7, to the Departmental Representative's order to:
.1 Assume, as the Constructor, the responsibility for the Departmental Representative's other Contractors; or
.2 Accept the Departmental Representative's other Contractor's role as Constructor and conform to that Contractor's Site Specific Health and Safety Plan.

1.7 WORK SEQUENCE

.1 Phased Work: Construct Work in three (3) phases as indicated on Contract Drawings to accommodate Owner's continued use of premises during construction.

.2 Coordinate Progress Schedule and coordinate with Owner Occupancy during construction.

1.7 WORK SEQUENCE (Cont'd)

.3 Required stages: Three (3) Phases as outlined in Contract Drawings and Documents, each with commissioning and one Substantial Performance for the Project. The phases are to be as outlined below:
.1 Phase 1: Expansion into Health Canada office area.
.2 Phase 2: Renovation of existing spaces (Part 1).
.3 Phase 3: Renovation of existing spaces (Part 2).

.4 Maintain fire access/control.

1.8 CONTRACTOR USE OF PREMISES

.1 Contractor shall limit use of premises to work areas as indicated on Contract Drawings, for storage, and for access, to allow;
.1 Partial owner occupancy.
.2 Work by other Contractors.

.2 Coordinate use of premises under direction of Departmental Representative.

.3 Obtain and pay for use of additional storage or work areas needed for operations under this Contract.

.4 Loading dock is available to load and unload material.

.5 Waste disposal bin can be located near the loading dock without blocking Owner's operation/use of premise.

1.9 PARTIAL OWNER OCCUPANCY

.1 Owner will occupy designated areas for the installation of requipment and furnishings.

.2 Cooperate with Owner in scheduling operations to minimize conflict and to facilitate Owner usage.

1.10 OWNER FURNISHED ITEMS

.1 Owner Responsibilities:
.1 Arrange for delivery of shop drawings, product data, samples, manufacturer's instructions, and certificates to Contractor.
.2 Deliver supplier's bill of materials to Contractor.

1.10 OWNER FURNISHED ITEMS (Cont'd)

.1 (Cont'd)
.3 Arrange and pay for delivery to site in accordance with Progress Schedule.
.4 Inspect deliveries jointly with Contractor.
.5 Submit claims for transportation damage.
.6 Arrange for replacement of damaged, defective or missing items.
.7 Arrange for manufacturer's field services; arrange for and deliver manufacturer's warranties and bonds to Contractor.

.2 Contractor Responsibilities:
.1 Designate submittals and delivery date for each product in progress schedule.
.2 Review shop drawings, product data, samples, and other submittals. Submit to Departmental Representative notification of any observed discrepancies or problems anticipated due to non-conformance with Contract Documents.
.3 Receive and unload products at site.
.4 Inspect deliveries jointly with Owner; record shortages, and damaged or defective items.
.5 Handle products at site, including uncrating and storage.
.6 Protect products from damage, and from exposure to elements.
.7 Assemble, install, connect, adjust, and finish products.
.8 Provide installation inspections required by public authorities.
.9 Repair or replace items damaged by Contractor or subcontractor on site (under his control).

.3 Schedule of Owner furnished and Contractor installed items.
.1 Fume hoods, for installation under Section 11 53 13.
.2 Autoclave, for installation under Section 11 53 13.
.3 Specialty cabinets including acid and solvent storage cabinets under fume hoods, for installation under Section 11 53 13.
.4 Electric strikes, for installation under Section 08 71 11.

1.11 ALTERATIONS TO EXISTING BUILDING

.1 Remove in good order, turn over to Department, and store within building where designated by Departmental Representative:
.1 Items as indicated in Section 02 41 23.

.2 Remove, temporarily store, clean, alter to suit and reinstall:
.1 Items as indicated in Section 02 41 23.

.3 Remove, temporarily store and turn over to other sections for building in:
.1 Items as indicated in Section 02 41 23.

.4 Provide new openings required in existing construction.

.5 Block in openings where items removed with material and finish to match existing adjoining construction.

.6 If required, undercut existing doors to clear new floor finish.

1.12 ADDITIONAL PROJECT DOCUMENTATION

.1 Refer to files provided by Health Canada that are to apply to Work of this Project and included in the Appendices of this Document. The mentioned files include the following:
.1 'Facility Orientation for Construction and Emergency Service Contractors'.
.2 'Site Specific Health & Safety Plan'.
.3 'Permit to Work Form'.
.4 'Site Specific Hazard Assessment'.
.5 'Hot Work Permit'.

PART 2 - PRODUCTS

2.1 NOT USED

.1 Not used.

PART 3 - EXECUTION

3.1 NOT USED

.1 Not used.

END

PART 1 - GENERAL

1.1 SECTION INCLUDES

.1 Access and egress.

.2 Use of site and facilities.

.3 Alterations, additions or repairs to existing building.

.4 Existing services.

.5 Special requirements.

.6 Security.

.7 Building smoking environment.

1.2 ACCESS AND EGRESS

.1 Design, construct and maintain temporary "access to" and "egress from" work areas, including stairs, runways, ramps or ladders and scaffolding, independent of finished surfaces and in accordance with relevant municipal, provincial and other regulations.

1.3 USE OF SITE AND FACILITIES

.1 Execute work with least possible interference or disturbance to normal use of premises. Make arrangements with Departmental Representative to facilitate work as stated.

.2 Maintain existing services to building and provide for personnel and vehicle access.

.3 Where security is reduced by work provide temporary means to maintain security.

.4 Departmental Representative will assign sanitary facilities for use by Contractor's personnel. Keep facilities clean.

.5 Freight elevator use to be coordinated with Facility Manager. Cleaning staff to have priority use of elevator. Refer to additional requirements as outlined in Documents included in the Appendices and referred to in Section 01 11 00.

.1 Protect walls of elevators, to approval of Departmental Representative prior to use.

1.3 USE OF SITE AND FACILITIES (Cont'd)

.5 (Cont'd)

.2 Accept liability for damage, safety of equipment and overloading of existing equipment.

.6 Closures: protect work temporarily until permanent enclosures are completed.

1.4 ALTERATIONS, ADDITIONS OR REPAIRS TO EXISTING BUILDING

.1 Execute work with least possible interference or disturbance to building operations, occupants, and normal use of premises. Arrange with Departmental Representative to facilitate execution of work.

1.5 EXISTING SERVICES

.1 Notify, Departmental Representative utility companies of intended interruption of services and obtain required permission.

.2 Where Work involves breaking into or connecting to existing services, give Departmental Representative 48 hours of notice for necessary interruption of mechanical or electrical service throughout course of work. Keep duration of interruptions minimum. Carry out interruptions after normal working hours of occupants as specified in this Section.

.3 Provide for personnel and vehicular traffic.

.4 Construct barriers in accordance with Section 01 56 00.

1.6 SPECIAL REQUIREMENTS

.1 Perform contruction work, Monday to Friday from 17:30 hours to 05:30 hours only, unless otherwise approved by the Owner. Contractor is permitted to work a minimum of five (5) hours on the weekend.

.2 Contractor to coordinate with Facility Manager for after hours work and access.

.3 Refer to Document 'Facility Orientation for Construction and Emergency Service Contractors' included in the Appendices of this Document.

1.6 SPECIAL REQUIREMENTS (Cont'd)

.4 Submit schedule in accordance with Section 01 32 16.

.5 Ensure Contractor's personnel employed on site become familiar with and obey regulations including safety, fire, traffic and security regulations.

.6 Keep within limits of work and avenues of ingress and egress.

.7 Deliver materials during specified working hours indicated in this Section, unless otherwise approved by Departmental Representative.

1.7 SECURITY

.1 Where security has been reduced by Work of Contract, provide temporary means to maintain security.

.2 Security requirements:
.1 Refer to Document 'Facility Orientation for Construction and Emergency Service Contractors' included in the Appendices at the end of this Document for security requirements for this Project.
.2 Personnel employed on this project must satisfy security requirements required for this Project.
.3 Obtain requisite clearance, as instructed, for each individual required to enter premises.
.4 Personnel will be checked in daily at start of work shift and provided with pass which must be worn at all times. Pass must be returned at end of work shift and personnel checked out.

1.8 BUILDING SMOKING ENVIRONMENT

.1 Comply with smoking restrictions. Smoking is not permitted within the facility or near entrances.

PART 2 - PRODUCTS

2.1 NOT USED .1 Not Used.

PART 3 - EXECUTION

3.1 NOT USED .1 Not Used.

END

PART 1 - GENERAL

1.1 SECTION INCLUDES

.1 Inspection and testing to be carried out by testing laboratory designated by Departmental Representative.

1.2 APPOINTMENT AND PAYMENT

.1 Departmental Representative will appoint and pay for services of testing laboratory except as follows:
.1 Inspection and testing required by laws, ordinances, rules, regulations or orders of public authorities.
.2 Inspection and testing performed exclusively for Contractor's convenience.
.3 Testing, adjustment and balancing of conveying systems, mechanical and electrical equipment and systems.
.4 Mill tests and certificates of compliance.
.5 Tests specified to be carried out by Contractor under supervision of Departmental Representative.

.2 Where tests or inspections by designated testing laboratory reveal Work not in accordance with contract requirements, pay costs for additional tests or inspections as required by Departmental Representative to verify acceptability of corrected work.

1.3 CONTRACTOR'S RESPONSIBILITIES

.1 Provide labour, equipment and facilities to:
.1 Provide access to Work for inspection and testing.
.2 Facilitate inspections and tests.
.3 Make good Work disturbed by inspection and test.
.4 Provide storage on site for laboratory's exclusive use to store equipment and cure test samples.

.2 Notify Departmental Representative 48 hours minimum sufficiently in advance of operations to allow for assignment of laboratory personnel and scheduling of test.

1.3 CONTRACTOR'S RESPONSIBILITIES (Cont'd)

.3 Where materials are specified to be tested, deliver representative samples in required quantity to testing laboratory.

.4 Pay costs for uncovering and making good Work that is covered before required inspection or testing is completed and approved by Departmental Representative.

PART 2 - PRODUCTS

2.1 NOT USED

.1 Not Used.

PART 3 - EXECUTION

3.1 NOT USED

.1 Not Used.

END

PART 1 - GENERAL

1.1 ADMINISTRATIVE

.1 Schedule and administer project meetings throughout the progress of the work at the call of Departmental Representative.

.2 Prepare agenda for meetings.

.3 Distribute written notice of each meeting 4 days in advance of meeting date to Departmental Representative.

.4 Provide physical space and make arrangements for meetings.

.5 Preside at meetings.

.6 Record the meeting minutes. Include significant proceedings and decisions. Identify actions by parties.

.7 Reproduce and distribute copies of minutes within three days after meetings and transmit to Departmental Representative, meeting participants and affected parties not in attendance.

.8 Representative of Contractor, Subcontractor and suppliers attending meetings will be qualified and authorized to act on behalf of party each represents.

1.2 PRECONSTRUCTION MEETING

.1 Within 15 days after award of Contract, request a meeting of parties in contract to discuss and resolve administrative procedures and responsibilities.

.2 Departmental Representative, Contractor, major Subcontractors, field inspectors and supervisors will be in attendance.

.3 Establish time and location of meeting and notify parties concerned minimum 5 days before meeting.

.4 Incorporate mutually agreed variations to Contract Documents into Agreement, prior to signing.

1.2 PRECONSTRUCTION MEETING (Cont'd)

.5 Agenda to include:

.1 Appointment of official representative of participants in the Work.

.2 Schedule of Work: in accordance with Section 01 32 16.

.3 Schedule of submission of shop drawings, samples, mock-ups, colour chips. Submit submittals in accordance with Section 01 33 00.

.4 Requirements for temporary facilities, site sign, offices, storage sheds, utilities, fences in accordance with Section 01 52 00.

.5 Delivery schedule of specified equipment in accordance with Section 01 32 16.

.6 Site security in accordance with Sections 01 14 00 and 01 56 00.

.7 Health and safety in accordance with Section 01 35 29.

.8 Proposed changes, change orders, procedures, approvals required, mark-up percentages permitted, time extensions, overtime, administrative requirements.

.9 Owner provided products.

.10 Record drawings and specifications in accordance with Sections 01 33 00 and 01 78 00.

.11 Maintenance manuals in accordance with Section 01 78 00.

.12 Take-over procedures, acceptance, warranties in accordance with Section 01 78 00.

.13 Monthly progress claims, administrative procedures, photographs, hold backs.

.14 Appointment of inspection and testing agencies or firms.

.15 Insurances, transcript of policies.

1.3 PROGRESS MEETINGS

.1 During course of Work and two (2) weeks prior to project completion, schedule progress meetings bi-weekly.

.2 Contractor, major Subcontractors involved in Work and Departmental Representative and Owner are to be in attendance.

.3 Notify parties minimum seven (7) days prior to meetings.

.4 Record minutes of meetings and circulate to attending parties and affected parties not in attendance within five (5) days after meeting.

1.3 PROGRESS MEETINGS (Cont'd)

.5 Agenda to include the following:
.1 Review, approval of minutes of previous meeting.
.2 Review of Work progress since previous meeting.
.3 Field observations, problems, conflicts.
.4 Problems which impede construction schedule.
.5 Review of off-site fabrication delivery schedules.
.6 Corrective measures and procedures to regain projected schedule.
.7 Revision to construction schedule.
.8 Progress schedule, during succeeding work period.
.9 Review submittal schedules: expedite as required.
.10 Maintenance of quality standards.
.11 Review proposed changes for affect on construction schedule and on completion date.
.12 Other business.

PART 2 - PRODUCTS

2.1 NOT USED

.1 Not Used.

PART 3 - EXECUTION

3.1 NOT USED

.1 Not Used.

END

PART 1 - GENERAL

1.1 DEFINITIONS

.1 Activity: element of Work performed during course of Project. Activity normally has expected duration, and expected cost and expected resource requirements. Activities can be subdivided into tasks.

.2 Bar Chart (GANTT Chart): graphic display of schedule-related information. In typical bar chart, activities or other Project elements are listed down left side of chart, dates are shown across top, and activity durations are shown as date-placed horizontal bars. Generally Bar Chart should be derived from commercially available computerized project management system.

.3 Baseline: original approved plan (for project, work package, or activity), plus or minus approved scope changes.

.4 Construction Work Week: Monday to Friday, inclusive, will provide five day work week and define schedule calendar working days as part of Bar (GANTT) Chart submission. Refer to Section 01 14 00 for construction work hours for this Project.

.5 Duration: number of work periods (not including holidays or other nonworking periods) required to complete activity or other project element. Usually expressed as workdays or workweeks.

.6 Master Plan: summary-level schedule that identifies major activities and key milestones.

.7 Milestone: significant event in project, usually completion of major deliverable.

.8 Project Schedule: planned dates for performing activities and the planned dates for meeting milestones. Dynamic, detailed record of tasks or activities that must be accomplished to satisfy Project objectives. Monitoring and control process involves using Project Schedule in executing and controlling activities and is used as basis for decision making throughout project life cycle.

1.1 DEFINITIONS (Cont'd)

.9 Project Planning, Monitoring and Control System: overall system operated by Departmental Representative to enable monitoring of project work in relation to established milestones.

1.2 REQUIREMENTS

.1 Ensure Master Plan and Detail Schedules are practical and remain within specified Contract duration.

.2 Plan to complete Work in accordance with prescribed milestones and time frame.

.3 Limit activity durations to maximum of approximately 5 working days, to allow for progress reporting.

.4 Ensure that it is understood that Award of Contract or time of beginning, rate of progress, Certificate of Substantial Performance and Certificate of Completion as defined times of completion are of essence of this contract.

1.3 SUBMITTALS

.1 Provide submittals in accordance with Section 01 33 00.

.2 Submit to Departmental Representative within 3 working days of Award of Contract Bar (GANTT) Chart as Master Plan for planning, monitoring and reporting of project progress.

.3 Submit Project Schedule to Departmental Representative within 5 working days of receipt of acceptance of Master Plan.

1.4 PROJECT MILESTONES

.1 Project milestones form interim targets for Project Schedule.
.1 Total Completion: January 15, 2016.

1.5 MASTER PLAN

.1 Structure schedule to allow orderly planning, organizing and execution of Work as Bar Chart (GANTT).

1.5 MASTER PLAN (Cont'd)

.2 Departmental Representative will review and return revised schedules within 5 working days.

.3 Revise impractical schedule and resubmit within 5 working days.

.4 Accepted revised schedule will become Master Plan and be used as baseline for updates.

1.6 PROJECT SCHEDULE

.1 Develop detailed Project Schedule derived from Master Plan.

.2 Ensure detailed Project Schedule includes as minimum milestone and activity types as follows:
.1 Award.
.2 Shop Drawings, Samples.
.3 Permits.
.4 Mobilization.
.5 Structural Steel.
.6 Interior Architecture (Walls, Floors and Ceiling).
.7 Plumbing.
.8 Lighting.
.9 Electrical.
.10 Piping.
.11 Controls.
.12 Heating, Ventilating, and Air Conditioning.
.13 Casework.
.14 Fire Systems.
.15 Testing and Commissioning.
.16 Supplied equipment long delivery items.
.17 Departmental Representative supplied equipment required dates.

1.7 PROJECT SCHEDULE REPORTING

.1 Update Project Schedule on weekly basis reflecting activity changes and completions, as well as activities in progress.

.2 Include as part of Project Schedule, narrative report identifying Work status to date, comparing current progress to baseline, presenting current forecasts, defining problem areas, anticipated delays and impact with possible mitigation.

1.8 PROJECT MEETINGS

.1 Discuss Project Schedule at regular site meetings specified in Section 01 31 19, identify activities that are behind schedule and provide measures to regain slippage. Activities considered behind schedule are those with projected start or completion dates later than current approved dates shown on baseline schedule.

.2 Weather related delays with their remedial measures will be discussed and negotiated.

PART 2 - PRODUCTS

2.1 NOT USED

.1 Not used.

PART 3 - EXECUTION

3.1 NOT USED

.1 Not used.

END

PART 1 - GENERAL

1.1 SECTION INCLUDES

.1 Administrative.

.2 Shop drawings and product data.

.3 Samples.

.4 Construction photographs.

.5 Fees, permits and certificates.

1.2 ADMINISTRATIVE

.1 Submit to Departmental Representative submittals listed for review. Submit promptly and in orderly sequence to not cause delay in Work. Failure to submit in ample time is not considered sufficient reason for extension of Contract Time and no claim for extension by reason of such default will be allowed.

.2 Do not proceed with Work affected by submittal until review is complete.

.3 Present shop drawings, product data, samples and mock-ups in SI Metric units.

.4 Where items or information is not produced in SI Metric units converted values are acceptable.

.5 Review submittals prior to submission to Departmental Representative. This review represents that necessary requirements have been determined and verified, or will be, and that each submittal has been checked and co-ordinated with requirements of Work and Contract Documents. Submittals not stamped, signed, dated and identified as to specific project will be returned without being examined and considered rejected.

.6 Notify Departmental Representative, in writing at time of submission, identifying deviations from requirements of Contract Documents stating reasons for deviations.

.7 Verify field measurements and affected adjacent Work are co-ordinated.

1.2 ADMINISTRATIVE (Cont'd)

.8 Contractor's responsibility for errors and omissions in submission is not relieved by Departmental Representative's review of submittals.

.9 Contractor's responsibility for deviations in submission from requirements of Contract Documents is not relieved by Departmental Representative review.

.10 Keep one reviewed copy of each submission on site.

.11 Submit number of hard copies specified for each type and format of submittal and also submit in electronic format as pdf files. Forward pdf, NMSEdit Professional spp, MS Word, MS Excel, and Autocad dwg files on USB compatible with PWGSC encryption requirements or through email or alternate electronic file sharing service such as ftp, as directed by Departmental Representative.

1.3 SHOP DRAWINGS AND PRODUCT DATA

.1 The term "shop drawings" means drawings, diagrams, illustrations, schedules, performance charts, brochures and other data which are to be provided by Contractor to illustrate details of a portion of Work.

.2 Submit drawings stamped and signed by professional engineer registered or licensed in Province of Ontario, Canada.

.3 Indicate materials, methods of construction and attachment or anchorage, erection diagrams, connections, explanatory notes and other information necessary for completion of Work. Where articles or equipment attach or connect to other articles or equipment, indicate that such items have been co-ordinated, regardless of Section under which adjacent items will be supplied and installed. Indicate cross references to design drawings and specifications.

.4 Allow 7 working days for Departmental Representative's review of each submission.

.5 Adjustments made on shop drawings by Departmental Representative are not intended to change Contract Price. If adjustments

1.3 SHOP DRAWINGS AND PRODUCT DATA (Cont'd)

.5 (Cont'd)
affect value of Work, state such in writing to Departmental Representative prior to proceeding with Work.

.6 Make changes in shop drawings as Departmental Representative may require, consistent with Contract Documents. When resubmitting, notify Departmental Representative in writing of revisions other than those requested.

.7 Accompany submissions with transmittal letter, in duplicate, containing:
.1 Date.
.2 Project title and number.
.3 Contractor's name and address.
.4 Identification and quantity of each shop drawing, product data and sample.
.5 Other pertinent data.

.8 Submissions shall include:
.1 Date and revision dates.
.2 Project title and number.
.3 Name and address of:
.1 Subcontractor.
.2 Supplier.
.3 Manufacturer.
.4 Contractor's stamp, signed by Contractor's authorized representative certifying approval of submissions, verification of field measurements and compliance with Contract Documents.
.5 Details of appropriate portions of Work as applicable:
.1 Fabrication.
.2 Layout, showing dimensions, including identified field dimensions, and clearances.
.3 Setting or erection details.
.4 Capacities.
.5 Performance characteristics.
.6 Standards.
.7 Operating weight.
.8 Wiring diagrams.
.9 Single line and schematic diagrams.
.10 Relationship to adjacent work.

.9 After Departmental Representative's review, distribute copies.

.10 Submit three hard copies and one electronic copy of shop drawings for each requirement requested in specification Sections and as

1.3 SHOP DRAWINGS AND PRODUCT DATA (Cont'd)

.10 (Cont'd)
Departmental Representative may reasonably request.

.11 Submit three hard copies and one electronic copy of product data sheets or brochures for requirements requested in specification Sections and as requested by Departmental Representative where shop drawings will not be prepared due to standardized manufacture of product.

.12 Submit three hard copies and one electronic copy of test reports for requirements requested in specification Sections and as requested by Departmental Representative.
.1 Report signed by authorized official of testing laboratory that material, product or system identical to material, product or system to be provided has been tested in accord with specified requirements.
.2 Testing must have been within 3 years of date of contract award for project.

.13 Submit three hard copies and one electronic copy of certificates for requirements requested in specification Sections and as requested by Departmental Representative.
.1 Statements printed on manufacturer's letterhead and signed by responsible officials of manufacturer of product, system or material attesting that product, system or material meets specification requirements.
.2 Certificates must be dated after award of project contract complete with project name.

.14 Submit three hard copies and one electronic copy of manufacturers instructions for requirements requested in specification Sections and as requested by Departmental Representative.
.1 Pre-printed material describing installation of product, system or material, including special notices and Material Safety Data Sheets concerning impedances, hazards and safety precautions.

.15 Submit three hard copies and one electronic copy of Manufacturer's Field Reports for requirements requested in specification Sections and as requested by Departmental Representative.

1.3 SHOP DRAWINGS AND PRODUCT DATA (Cont'd)

.16 Documentation of the testing and verification actions taken by manufacturer's representative to confirm compliance with manufacturer's standards or instructions.

.17 Submit three hard copies and one electronic copy of Operation and Maintenance Data for requirements requested in specification Sections and as requested by Departmental Representative.

.18 Supplement standard information to provide details applicable to project.

.19 If upon review by Departmental Representative, no errors or omissions are discovered or if only minor corrections are made, copies will be returned and fabrication and installation of Work may proceed. If shop drawings are rejected, noted copy will be returned and resubmission of corrected shop drawings, through same procedure indicated above, must be performed before fabrication and installation of Work may proceed.

.20 The review of shop drawings by Public Works and Government Services Canada (PWGSC) is for sole purpose of ascertaining conformance with general concept.

.1 This review shall not mean that PWGSC approves detail design inherent in shop drawings, responsibility for which shall remain with Contractor submitting same, and such review shall not relieve Contractor of responsibility for errors or omissions in shop drawings or of responsibility for meeting requirements of construction and Contract Documents.

.2 Without restricting generality of foregoing, Contractor is responsible for dimensions to be confirmed and correlated at job site, for information that pertains solely to fabrication processes or to techniques of construction and installation and for co-ordination of Work of sub-trades.

1.4 SAMPLES

.1 Submit for review samples in duplicate as requested in respective specification Sections. Label samples with origin and intended use.

1.4 SAMPLES (Cont'd)

.2 Deliver samples prepaid to Departmental Representative's business address.

.3 Notify Departmental Representative in writing, at time of submission of deviations in samples from requirements of Contract Documents.

.4 Where colour, pattern or texture is criterion, submit full range of samples.

.5 Adjustments made on samples by Departmental Representative are not intended to change Contract Price. If adjustments affect value of Work, state such in writing to Departmental Representative prior to proceeding with Work.

.6 Make changes in samples which Departmental Representative may require, consistent with Contract Documents.

.7 Reviewed and accepted samples will become standard of workmanship and material against which installed Work will be verified.

1.5 MOCK-UPS

.1 Erect mock-ups in accordance with Section 01 45 00.

1.6 PHOTOGRAPHIC DOCUMENTATION

.1 Submit electronic and hard copy of colour digital photography in jpg format, standard resolution for progress photographs and fine resolution for final photographs.

.2 Project identification: name and number of project and date of exposure indicated.

.3 Number of viewpoints:
.1 Viewpoints and their location as determined by Departmental Representative.

.4 Frequency of photographic documentation: monthly as directed by Departmental Representative.

1.7 FEES, PERMITS AND CERTIFICATES

.1 Provide authorities having jurisdiction with information requested.

.2 Pay fees and obtain certificates and permits required.

.3 Furnish certificates and permits.

.4 Submit acceptable certificate stating that suspended ceiling systems provide adequate support for electrical fixtures, as required by current bulletin of Electrical Safety Authority (ESA).

PART 2 - PRODUCTS

2.1 NOT USED

.1 Not Used.

PART 3 - EXECUTION

3.1 NOT USED

.1 Not Used.

END

PART 1 - GENERAL

1.1 REFERENCES

.1 Canadian Standards Association (CSA): Canada
.1 CSA S350-M1980(R2003), Code of Practice for Safety in Demolition of Structures.

.2 National Building Code 2010 (NBC):
.1 NBC 2010, Division B, Part 8 Safety Measures at Construction and Demolition Sites.

.3 National Fire Code 2010 (NFC):
.1 NFC 2010, Division B, Part 5 Hazardous Processes and Operations, subsection 5.6.1.3 Fire Safety Plan.

.4 Province of Ontario:
.1 Occupational Health and Safety Act Revised Statutes of Ontario 1990, Chapter O.1 as amended, and Regulations for Construction Projects, O. Reg. 213/91 as amended.
.2 O. Reg. 490/09, Designated Substances.
.3 Workplace Safety and Insurance Act, 1997.
.4 Municipal statutes and authorities.

.5 Treasury Board of Canada Secretariat (TBS):
.1 Treasury Board, Fire Protection Standard April 1, 2010 www.tbs-sct.gc.ca/pol/doc-eng.aspx ?id=17316&section=text.

1.2 ACTION AND INFORMATIONAL SUBMITTALS

.1 Submit in accordance with Section 01 33 00.

.2 Submit site-specific Health and Safety Plan: Within 5 days after date of Notice to Proceed and prior to commencement of Work. Health and Safety Plan must include:
.1 Results of site specific safety hazard assessment.
.2 Results of safety and health risk or hazard analysis for site tasks and operation found in work plan.
.3 Measures and controls to be implemented to address identified safety hazards and risks.

.3 Provide a Fire Safety Plan, specific to the work location, in accordance with NBC, Division B, Article 8.1.1.3 prior to

1.2 ACTION AND INFORMATIONAL SUBMITTALS (Cont'd)

.3 (Cont'd)
commencement of work. The plan shall be coordinated with, and integrated into, the existing Emergency Procedures and Evacuation Plan in place at the site. Departmental Representative will provide Emergency Procedures and Evacuation Plan. Deliver two copies of the Fire Safety Plan to the Departmental Representative not later than 14 days before commencing work.

.4 Contractor's and Sub-contractors' Safety Communication Plan.

.5 Contingency and Emergency Response Plan addressing standard operating procedures specific to the project site to be implemented during emergency situations. Coordinate plan with existing Emergency Response requirements and procedures provided by Departmental Representative.

.6 Departmental Representative will review Contractor's site-specific Health and Safety Plan and provide comments to Contractor within 3 days after receipt of plan. Revise plan as appropriate and resubmit plan to Departmental Representative within 3 days after receipt of comments from Departmental Representative.

.7 Departmental Representative's review of Contractor's final Health and Safety plan should not be construed as approval and does not reduce the Contractor's overall responsibility for construction Health and Safety.

.8 Submit names of personnel and alternates responsible for site safety and health.

.9 Submit records of Contractor's Health and Safety meetings when requested.

.10 Submit 2 copies of Contractor's authorized representative's work site health and safety inspection reports to Departmental Representative.

.11 Submit 2 copies of Contractor's authorized representative's work site health and safety inspection reports to Departmental Representative.

1.2 ACTION AND INFORMATIONAL SUBMITTALS (Cont'd)

.12 Submit copies of orders, directions or reports issued by health and safety inspectors of the authorities having jurisdiction.

.13 Submit copies of incident and accident reports.

.14 Submit Material Safety Data Sheets (MSDS).

.15 Submit Workplace Safety and Insurance Board (WSIB)- Experience Rating Report.

1.3 FILING OF NOTICE

.1 File Notice of Project with Provincial authorities prior to commencement of Work.

1.4 WORK PERMIT

.1 Obtain building permits related to project prior to commencement of Work.

.2 Obtain applicable Work and Hot Work Permit forms from Building Operator. Allow for one (1) re-submission of work permits during course of work.

1.5 SAFETY ASSESSMENT

.1 Perform site specific safety hazard assessment related to project.

1.6 MEETINGS

.1 Schedule and administer Health and Safety meeting with Departmental Representative prior to commencement of Work.

1.7 REGULATORY REQUIREMENTS

.1 Comply with the Acts and regulations of the Province of Ontario.

.2 Comply with specified standards and regulations to ensure safe operations at site.

1.8 PROJECT/SITE CONDITIONS

.1 Work at site will involve contact with:
.1 Refer to asbestos specifications and Reports appended to the end of this Document for hazardous materials that might be found on site.

1.8 PROJECT/SITE CONDITIONS (Cont'd)

.1 (Cont'd)
.2 Asbestos-containing materials.
.3 Lead-containing materials.
.4 Chlorofluorocarbons (CFCs) ozone-depleting substances (ODSs).
.5 Silica.

1.9 GENERAL REQUIREMENTS

.1 Develop written site-specific Health and Safety Plan based on hazard assessment prior to beginning site Work and continue to implement, maintain, and enforce plan until final demobilization from site. Health and Safety Plan must address project specifications.

.2 Relief from or substitution for any portion or provision of minimum Health and Safety standards specified herein or reviewed site-specific Health and Safety Plan shall be submitted to Departmental Representative in writing.

1.10 COMPLIANCE REQUIREMENTS

.1 Comply with Ontario Occupational Health and Safety Act, R.S.O. 1990 Chapter 0.1, as amended.

1.11 RESPONSIBILITY

.1 Be responsible for health and safety of persons on site, safety of property on site and for protection of persons adjacent to site and environment to extent that they may be affected by conduct of Work.

.2 Comply with and enforce compliance by employees with safety requirements of Contract Documents, applicable federal, provincial, territorial and local statutes, regulations, and ordinances, and with site-specific Health and Safety Plan.

.3 Where applicable the Contractor shall be designated "Constructor", as defined by Occupational Health and Safety Act and Regulations for Construction Projects for the Province of Ontario.

1.12 UNFORSEEN HAZARDS

.1 Should any unforeseen or peculiar safety-related factor, hazard, or condition become evident during performance of Work, immediately stop work and advise Departmental Representative verbally and in writing.

.2 Follow procedures in place for Employees Right to Refuse Work as specified in the Occupational Health and Safety Act for the Province of Ontario.

1.13 HEALTH AND SAFETY COORDINATOR

.1 Employ and assign to Work, competent and authorized representative as Health and Safety Co-ordinator. Health and Safety Co-ordinator must:
.1 Have site-related working experience specific to activities associated with designated substances.
.2 Have working knowledge of occupational safety and health regulations.
.3 Be responsible for completing Contractor's Health and Safety Training Sessions and ensuring that personnel not successfully completing required training are not permitted to enter site to perform Work.
.4 Be responsible for implementing, enforcing daily and monitoring site-specific Contractor's Health and Safety Plan.
.5 Be on site during execution of Work and report directly to and be under direction of site supervisor.

1.14 POSTING OF DOCUMENTS

.1 Ensure applicable items, articles, notices and orders are posted in conspicuous location on site in accordance with Acts and Regulations of Province of Ontario, and in consultation with Departmental Representative.
.1 Contractor's Safety Policy.
.2 Constructor's Name.
.3 Notice of Project.
.4 Name, trade, and employer of Health and Safety Representative or Joint Health and Safety Committee members (if applicable).
.5 Ministry of Labour Orders and reports.
.6 Occupational Health and Safety Act and Regulations for Construction Projects for Province of Ontario.
.7 Address and phone number of nearest Ministry of Labour office.

1.14 POSTING OF DOCUMENTS (Cont'd)

.1 (Cont'd)
.8 Material Safety Data Sheets.
.9 Written Emeregency Response Plan.
.10 Site Specific Safety Plan.
.11 Valid certificate of first aider on duty.
.12 WSIB "In Case of Injury At Work" poster.
.13 Location of toilet and cleanup facilities.

1.15 CORRECTION OF NON-COMPLIANCE

.1 Immediately address health and safety non-compliance issues identified by authority having jurisdiction or by Departmental Representative.

.2 Provide Departmental Representative with written report of action taken to correct non-compliance of health and safety issues identified.

.3 Departmental Representative may stop Work if non-compliance of health and safety regulations is not corrected.

1.16 BLASTING

.1 Blasting or other use of explosives is not permitted.

1.17 POWDER ACTUATED DEVICES

.1 Use powder actuated devices only after receipt of written permission from Departmental Representative.

1.18 WORK STOPPAGE

.1 Give precedence to safety and health of public and site personnel and protection of environment over cost and schedule considerations for Work.

.2 Assign responsibility and obligation to Health and Safety Coordinator to stop or start Work when, at Health and Safety Coordinator's discretion, it is necessary or advisable for reasons of health or safety. Departmental Representative may also stop Work for health and safety considerations.

PART 2 - PRODUCTS

2.1 NOT USED .1 Not used.

PART 3 - EXECUTION

3.1 NOT USED .1 Not used.

END

PART 1 - GENERAL

1.1 FIRES

.1 Fires and burning of rubbish on site is not permitted.

1.2 DISPOSAL OF WASTES

.1 Do not bury rubbish and waste materials.

.2 Do not dispose of waste or volatile materials, such as mineral spirits, oil or paint thinner into waterways, storm or sanitary sewers.

1.3 POLLUTION CONTROL

.1 Control emissions from equipment and plant in accordance with local authorities' emission requirements.

.3 Cover or wet down dry materials and rubbish to prevent blowing dust and debris.

.4 Spills of deleterious substances:
.1 Immediately contain, limit spread and clean up in accordance with provincial regulatory requirements.
.2 Report immediately to Ontario Spills Action Centre: 1-800-268-6060.
.3 Further information on dangerous goods emergency cleanup and precautions including a list of companies performing this work can be obtained from the Transport Canada 24-hour number (613) 996-6666 collect.

1.4 NOTIFICATION

.1 Departmental Representative will notify Contractor in writing of observed noncompliance with Federal, Provincial or Municipal environmental laws or regulations, permits, and other elements of Contractor's Environmental Protection plan.

.2 Contractor: after receipt of such notice, inform Departmental Representative of proposed corrective action and take such action for approval by Departmental Representative.
.1 Take action only after receipt of written approval by Departmental Representative.

1.4 NOTIFICATION (Cont'd)

.3 Departmental Representative will issue stop order of work until satisfactory corrective action has been taken.

.4 No time extensions granted or equitable adjustments allowed to Contractor for such suspensions.

PART 2 - PRODUCTS

2.1 NOT USED

.1 Not Used.

PART 3 - EXECUTION

3.1 CLEANING

.1 Progress Cleaning: clean in accordance with Section 01 74 11.
.1 Leave Work area clean at end of each day.

.2 Ensure public waterways, storm and sanitary sewers remain free of waste and volatile materials disposal.

.3 Final Cleaning: upon completion remove surplus materials, rubbish, tools and equipment in accordance with Section 01 74 11.

END

PART 1 - GENERAL

1.1 REFERENCES AND CODES

.1 Perform Work in accordance with National Building Code of Canada (NBC) 2010, National Fire Code of Canada (NFC) 2010 and Ontario Building Code (OBC) 2012, including all amendments up to bid closing date and other codes of provincial or local application provided that in case of conflict or discrepancy, more stringent requirements apply as directed by the Departmental Representative.

.2 Meet or exceed requirements of:
.1 Contract documents.
.2 Specified standards, codes and referenced documents.

1.2 HAZARDOUS MATERIAL DISCOVERY

.1 Stop work immediately and notify Departmental Representative if materials which may contain designated substances or PCB's, other than those identified in Section 01 35 29 are discovered in course of work.

1.3 IAQ - INDOOR AIR QUALITY

.1 Comply with CSA-Z204-94(R1999), Guideline for Managing Indoor Air Quality in Office Buildings and CSA B651-12, Accessible Design for the Built Environment.

1.4 ACCESSIBLE DESIGN

.1 Comply with NBC/NFC 2010, OBC/OFC 2012 and requirements of CSA B651, unless specified otherwise. In any case of conflict or discrepancy between the building codes and CSA B651, the requirements of mentioned codes above shall apply.

1.5 TAXES

.1 Pay applicable Federal, Provincial and Municipal taxes.

1.6 EXAMINATION

.1 Examine existing conditions and determine conditions affecting work.

.2 Conduct concrete floor moisture testing using Calcium Chloride moisture tests.
.1 Submit test results to Departmental Representative for approval prior to installing any flooring. Conduct one test per 100 m^2 of area being covered.

PART 2 - PRODUCTS

2.1 NOT USED

.1 Not Used.

PART 3 - EXECUTION

3.1 NOT USED

.1 Not Used.

END

PART 1 - GENERAL

1.1 ABBREVIATIONS AND ACRONYMS

.1 The abbreviations and acronyms are commonly found in the Project Manual and represent the associated organizations or terms.

1.2 MATERIALS, EQUIPMENT AND METHODS

.1 A:
- .1 AB: anchor bolt.
- .2 AC: acoustic.
- .3 AC PAN: acoustic panel.
- .4 ACT: acoustic ceiling tile.
- .5 AFF: above finished floor.
- .6 AC PLAS: acoustic plaster.
- .7 ACT: acoustic tile.
- .8 ACR CU LVR: acrylic cube louvre.
- .9 ADH: adhesive.
- .10 ADJ: adjustable.
- .11 A/C: air conditioner.
- .12 AHU: air handling unit.
- .13 AL: aluminum.
- .14 ANOD: anodized.
- .15 APPROX: approximate.
- .16 ARCH: architecture.
- .17 ARCH BLK: architectural block.
- .18 AVB: air vapour barrier.

.2 B:
- .1 B: base.
- .2 BEAST: benthic assessment of sediment.
- .3 BH: bore hole.
- .4 BHP: brake horse power.
- .5 BL: bottom layer.
- .6 BLK: block.
- .7 BLKD: bulkhead.
- .8 BM: beam.
- .9 BOT: bottom.
- .10 BMP: best management practice.
- .11 B PL: base plate.
- .12 BRG: bearing.
- .13 BRK: brick.
- .14 BSMT: basement.
- .15 BTEX: benzene, toluene, ethylbenzene and xylenes.
- .16 BUR: built-up roof.

.3 C:
- .1 CAL: caliper.
- .2 CANTIL: cantilever.
- .3 CB: catch basin.

1.2 MATERIALS, EQUIPMENT AND METHODS (Cont'd)

.3 C:(Cont'd)

.4 CC: centre to centre.
.5 CCN: contemplated change notice.
.6 CDF: controlled density fill.
.7 CEC: Canadian Electical Code.
.8 CF: chair fabric.
.9 CHAN: channel.
.10 CHS: Canadian hydrographic service.
.11 CJ: construction joint.
.12 CL: centreline.
.13 CK: cork.
.14 CLG: ceiling.
.15 CLR: clear.
.16 COL: column.
.17 CONC: concrete.
.18 CONC BLK: concrete block.
.19 CONC BRK: concrete brick.
.20 CONT: continuous.
.21 CONT J: control joint.
.22 COMPL: complete.
.23 CM: centimetre. (Nursery stock).
.24 CP: circulating pump.
.25 CPL: cement plaster.
.26 CPM: critical path method.
.27 CPT: carpet.
.28 CPTT: carpet tile.
.29 CT: ceramic tile.
.30 CTE: connect to existing.
.31 CV: control valve.
.32 CVT: conductive vinyl tile.
.33 C/W: complete with.

.4 D:

.1 D: deep.
.2 dB: decibels.
.3 DB: dry-bulb.
.4 DD: dutch door.
.5 DEG: degree.
.6 DF: drinking fountain.
.7 DIA: diameter.
.8 DIM: dimension.
.9 DL: dead load.
.10 DMNT: demountable.
.11 DP: dampproofing.
.12 DR: door.
.13 DRP: drapery.
.14 DWL: dowel.

.5 E:

.1 EA: each.
.2 EC: epoxy coating.
.3 ECF: engineered containment facility.
.4 EE: each end.

1.2 MATERIALS, EQUIPMENT AND METHODS (Cont'd)

.5 E:(Cont'd)
- .5 EF: each face (architectural/structural).
- .6 EF: exhaust fan (mechanical/electrical).
- .7 EL: elevation.
- .8 ELEC: electric.
- .9 ELEV: elevator.
- .10 EM: expanded metal.
- .11 ENCL: enclosure.
- .12 EQ: equal.
- .13 ET: expansion tank.
- .14 EXH: exhaust.
- .15 EXIST: existing.
- .16 EXPJ: expansion joint.
- .17 EXP STRUCT: exposed structure.
- .18 EXT: exterior.
- .19 EW: each way.
- .20 EWT: entering water temperature.

.6 F:
- .1 FC: fuel contributed.
- .2 FD: floor drain.
- .3 FDN: foundation.
- .4 FEAT W: feature wall.
- .5 FEXT: fire extinguisher.
- .6 FH: fire hose.
- .7 FHC: fire hose cabinet.
- .8 FHR: fire hose rack.
- .9 FIN: finish.
- .10 FIP: federal identity program.
- .11 FL: floor.
- .12 FLD: field.
- .13 FLUOR: fluorescent.
- .14 FR: frame.
- .15 FRR: fire resistance rating.
- .16 FTG: footing.

.7 G:
- .1 GALV: galvanized steel.
- .2 GB: grab bar.
- .3 GBD: gypsum board.
- .4 GC: General Conditions.
- .5 GF: ground floor.
- .6 GFCI: ground fault circuit interrupter.
- .7 GL: glass or glazing.
- .8 GL BLK: glass block.
- .9 GPC: gypsum plaster ceiling.
- .10 GPW: gypsum plaster wall.
- .11 GT: glass tile.

.8 H:
- .1 HB: hose bib.
- .2 HC: hollow core.

1.2 MATERIALS, EQUIPMENT AND METHODS (Cont'd)

.8 H:(Cont'd)
- .3 HCWD: hollow core wood door.
- .4 HD: hand dryer.
- .5 HDW: hardware.
- .6 HDWD: hardwood.
- .7 HEX: heat exchanger.
- .8 HM: hollow metal.
- .9 HOR: horizontal.
- .10 HOR EF: horizontal each face.
- .11 HP: hydro pole.
- .12 HPA: Hamilton Port Authority.
- .13 HR: hour.
- .14 HRV: heat recovery ventilator.
- .15 HT: height.
- .16 HTR: heater.
- .17 HUM: humidifier.
- .18 HWT: hot water tank.
- .19 HYD: hydrant.
- .20 HZ: Hertz frequency, cycles per second.

.9 I:
- .1 ICF: insulated concrete formwork.
- .2 ID: inside diameter.
- .3 INS: insulation.
- .4 INTLK: interlock.

.10 J:
- .1 JT: joint.

.11 K:
- .1 KPL: kick plate.

.12 L:
- .1 LAT: leaving air temperature.
- .2 LAV: lavatory.
- .3 LDG: landing.
- .4 LG: long.
- .5 LINO: linoleum.
- .6 LL: live load.
- .7 LT: light.
- .8 LWT: leaving water temperature.

.13 M:
- .1 MAS: masonry.
- .2 MAS FL: masonry flashing.
- .3 MAX: maximum.
- .4 MBG: metal bar grating.
- .5 MCL: metal cube louvre.
- .6 MECH: mechanical.
- .7 MET: metal.
- .8 MET DK: metal deck.
- .9 MET FL: metal flashing.
- .10 MET GRID CLG: metal grid ceiling.

1.2 MATERIALS, EQUIPMENT AND METHODS (Cont'd)

.13 M:(Cont'd)
- .11 MET GRTG: metal grating.
- .12 MET LIN CLG: metal linear ceiling.
- .13 MET T PTN: metal toilet partition.
- .14 MH: maintenance hole.
- .15 MIN: minimum.
- .16 MLP: metal lath and plaster.
- .17 MO: masonry opening.
- .18 MR: marble.
- .19 MT: metal threshold.
- .20 MWP: membrane waterproofing.

.14 N:
- .1 NBC: national building code.
- .2 NC: normally closed.
- .3 NF: near face.
- .4 NFC: national fire code.
- .5 NIC: not in contract.
- .6 NO: number.
- .7 NRC: noise reduction coefficient.
- .8 NRP: non removable pin.
- .9 NTS: not to scale.

.15 O:
- .1 OA: outside air.
- .2 OBC: Ontario building code.
- .3 OC: on centre.
- .4 OD: outside diameter.
- .5 OPNG: opening.
- .6 OPR: operator.
- .7 OVHD: overhead.
- .8 OWSJ: open web steel joist.

.16 P:
- .1 P: prefinished.
- .2 PAH: polynuclear aromatic hydrocarbons.
- .3 PARG: parging.
- .4 PCC: precast concrete.
- .5 PCT: porcelain ceramic tile.
- .6 PED ACS FLG: pedestal access flooring.
- .7 PF: panel fabric.
- .8 PH: phase.
- .9 PL: plate.
- .10 PLAM: plastic laminate.
- .11 PLAS: plaster.
- .12 PLYWD: plywood.
- .13 PR: pair.
- .14 PREFAB: prefabricated.
- .15 PREFIN: prefinished.
- .16 PRESS: pressure.
- .17 PRFL: profile.
- .18 PRV: pressure regulating valve.
- .19 PT: paint.

1.2 MATERIALS, EQUIPMENT AND METHODS (Cont'd)

.16 P:(Cont'd)
- .20 PTD: paper towel dispenser.
- .21 PTN: partition.
- .22 PVC: polyvinyl cholide.

.17 Q:
- .1 QTB: quarry tile base.
- .2 QTF: quarry tile floor.
- .3 QTR: quarry tile roof.

.18 R:
- .1 R: radius.
- .2 RA: return air.
- .3 RAD: return air damper.
- .4 RB: resilient base.
- .5 RC: reinforced concrete.
- .6 RCPT: receptacle.
- .7 RD: roof drain.
- .8 REINF: reinforced/reinforcing.
- .9 REQD: required.
- .10 REQT: requirement.
- .11 RFT: rubber floor tile.
- .12 RM: room.
- .13 RO: rough opening.
- .14 RP: radiant panel.
- .15 RRS: recycled rubber sheet.
- .16 RRT: recycled rubber tile.
- .17 RSD: rolling steel door.
- .18 RSF: rubber sheet flooring.
- .19 RT: rubber tile.
- .20 RTU: roof top unit.
- .21 RWL: rain water leader.

.19 S:
- .1 SA: supply air.
- .2 SAN SEW: sanitary sewer.
- .3 SCHED: schedule.
- .4 SC: solid core.
- .5 SCRN: screen.
- .6 SCWD: solid core wood door.
- .7 SD: smoke developed.
- .8 SDT: static dissipative tile.
- .9 SECT: section.
- .10 SH: sill height.
- .11 SIM: similar.
- .12 SL: sliding.
- .13 SLR: sealer.
- .14 SPEC: specification.
- .15 SS: stainless steel.
- .16 STD: standard.
- .17 STL: steel.
- .18 STL BM: steel beam.
- .19 STC: sound tranmission class.

1.2 MATERIALS, EQUIPMENT AND METHODS (Cont'd)

.19 S:(Cont'd)
- .20 STL FL DK: steel floor deck.
- .21 STL PL: steel plate.
- .22 STN: stone.
- .23 STR: structure or structural.
- .24 ST SEW: storm sewer.
- .25 S&U: stain and urethane.
- .26 S&V: stain and varnish.
- .27 SVT: solid vinyl tile.

.20 T:
- .1 T: top.
- .2 T&B: top and bottom.
- .3 TCB: turbidity control plan.
- .4 TEL: telephone.
- .5 TER: terrazzo.
- .6 TERT: terrazzo tile.
- .7 THKNS: thickness.
- .8 THR: threshold.
- .9 TMPD: tempered.
- .10 TOPG: topping.
- .11 TRANSV: transverse.
- .12 TYP: typical.

.21 U:
- .1 U: urethane.
- .2 U/C: undercut.
- .3 UGRD: underground.
- .4 UNO: unless noted otherwise.
- .5 UOS: unless otherwise specified.
- .6 U/S: underside.
- .7 UR: urinal.

.22 V:
- .1 V: volt.
- .2 VCF: vinyl coated fabric.
- .3 VCT: vinyl compositition tile.
- .4 VEL: velocity.
- .5 VERT: vertical.
- .6 VERT B: vertical blinds.
- .7 VERT EF: vertical each face.
- .8 VFC, vinyl faced ceiling tile, new.
- .9 VFU, vinyl faced ceiling tile, existing.
- .10 VSF: vinyl sheet flooring.
- .11 VPT: vinyl plank flooring.
- .12 VT: vinyl tile.
- .13 VWC: vinyl wall covering.

.23 W:
- .1 WB: wet-bulb.
- .2 WC: water closet.
- .3 W-C: wall connectors.
- .4 WD: wood.

1.2 MATERIALS, EQUIPMENT AND METHODS (Cont'd)

.23 W:(Cont'd)
.5 WDV: wood veneer.
.6 WG: water gauge.
.7 WH: wall hydrant.
.8 WHMIS: workplace hazardous materials information system.
.9 WP: waterproofing.
.10 WR: washroom.
.11 WSIB: workplace safety and insurnace board.
.12 WT: weight.
.13 WTP: water treatment plant.

1.3 STANDARDS ORGANIZATIONS

.1 Standards writing organizations:
.1 AA - Aluminum Association.
.2 ACPA - American Concrete Pipe Association.
.3 ANSI - American National Standards Institute.
.4 ASHRAE - American Society of Heating and Refrigerating and Air-Conditioning Engineers.
.5 ASTM - American Society for Testing and Materials.
.6 AWI/AWMAC - Architectural Woodwork Institute/Architectural Woodwork Manufacturers Association of Canada.
.7 AWPA - American Wood Preservers' Association.
.8 AWWA - American Water Works Association.
.9 BHMA - Builders Hardware Manufacturers Association.
.10 CCDC - Canadian Construction Documents Committee.
.11 CCMPA - Canadian Concrete Masonry Producers Association.
.12 CGSB - Canadian General Standards Board.
.13 CNTA - Canadian Nursery Trades Association.
.14 CPCA - Canadian Painting Contractors Association.
.15 CRCA - Canadian Roofing Contractors Association.
.16 CSA - Canadian Standards Association.
.17 CSC - Construction Specifications Canada.
.18 CSDMA - Canadian Steel Door Manufacturers Association.
.19 CSI - Construction Specifications Institute.
.20 CSSBI - Canadian Sheet Steel Building Institute.

1.3 STANDARDS ORGANIZATIONS (Cont'd)

.1 (Cont'd)

.21 CRCA - Canadian Roofing Contractors Association.

.22 DHI - Door and Hardware Insitute.

.23 EEMAC - Electrical and Electronic Manufacturer's Association of Canada.

.24 ESA - Electrical Safety Authority.

.25 FCC - Fire Commissioner of Canada.

.26 FSC - Forest Stewardship Council.

.27 GANA - Glass Association of North America.

.28 HMMA - Hollow Metal Manufacturers Association.

.29 IEEE - Institute of Electrical and Electronics Engineers Inc.

.30 ISO - International Organization for Standardization.

.31 IWFA - International Window Film Association.

.32 LEED - LEED Canada, Leadership in Energy and Environmental Design.

.33 MPI - Master Painters Insitute.

.34 NAAMM - National Association of Architectural Metal Manufacturers.

.35 NCPI - National Clay Pipe Institute.

.36 NEMA - National Electrical Manufacturers Association.

.37 NFPA - National Fire Protection Association.

.38 OPSD - Ontario Provincial Standard Drawings.

.39 OPSS - Ontario Provincial Standard Specifications.

.40 PPI - Plasctics Pipe Institute.

.41 SDI - Steel Door Intitute.

.42 SCAQMD - South Coast Air Quality Management District.

.43 TIA - Telecommunications Industry Association.

.44 TIAC - Thermal Insulation Association of Canada.

.45 TTMAC - Terrazzo Tile and Marble Association of Canada.

.46 UL - Underwriters Laboratories.

.47 ULC - Underwriters Laboratories of Canada.

.48 US EPA - United States Environmental Protection Agency.

.49 WH - Warnock Hersey.

1.4 FEDERAL GOVERNMENT DEPARTMENTS AND AGENGIES

.1 Departments, agencies and crown corporations.
.1 CEAA - Canadian Environmental Assessment Agency.
.2 CSC - Correctional Service Canada.
.3 CRA - Canada Revenue Agency.
.4 DND - Department of National Defence.
.5 EC - Environment Canada.
.6 FHBRO - Federal Heritage Buildings Review Office.
.7 HC - Health Canada.
.8 HCD - Heritage Conservation Directorate.
.9 LC - Labour Canada.
.10 PC - Parks Canada.
.11 PWGSC - Public Works and Government Services Canada.
.12 RCMP - Royal Canadian Mounted Police.
.13 TBS - Treasury Board Secretariat.
.14 TC - Transport Canada.

1.5 PROVINCIAL GOVERNMENT DEPARTMENTS AND AGENGIES

.1 MOEE - Ontario Ministry of Environment and Energy.

.2 MOL - Ontario Ministry of Labour.

.3 MTO and MOT - Ontario Ministry of Transportation.

.4 TSSA - Technical Standards and Safety Authority.

1.6 INTERNATIONAL GOVERNMENT DEPARTMENTS AND AGENCIES

.1 DOHMH - New York City Department of Health and Mental Hygiene, USA.

.2 GSA - Government Services Administration, USA.

1.7 UNITS OF MEASURE METRIC

.1 The following abbreviations of units of measure are commonly found in the Project Manual:
.1 C: Celsius.
.2 cm: centimetre.
.3 kg: kilogram.
.4 kg/m^3: kilogram per cubic metre.
.5 kN: kilonewton.
.6 kPa: kilopascals.
.7 kw: kilowatts.
.8 l/s: litre per second.

1.7 UNITS OF MEASURE METRIC (Cont'd)

.1 (Cont'd)
.9 m: metre.
.10 m^3: cubic metre.
.11 mg/kg: milligrams per kilogram.
.12 mg/L: milligrams per litre.
.13 mm: millimetres.
.14 MPa: megapascal.
.15 NTU: nephelometric turbidity unit.
.16 ppm: parts per million.
.17 ug/L: micrograms per litre.
.18 ug/m^3: micrograms per cubic metre.

1.8 UNITS OF MEASURE IMPERIAL

.1 The following abbreviations of units of measure are commonly found in the Project Manual:
.1 BTU: British thermal units.
.2 CFM: cubic feet per minute.
.3 F: Fahrenheit.
.4 ft: foot/feet.
.5 FPI: fins per inch.
.6 FPM: feet per minute.
.7 ga: gauge.
.8 gpm: gallons per minute.
.9 in: inches.
.10 lbs: pounds.
.11 NTU: nephelometric turbidity unit.
.12 psi: pounds-force per square inch.
.13 PSIG: PSI gauge.
.14 ppm: parts per million.
.15 RPM: revolutions per minute.

PART 2 - PRODUCTS

2.1 NOT USED

.1 Not Used.

PART 3 - EXECUTION

3.1 NOT USED

.1 Not Used.

END

PART 1 - GENERAL

1.1 SECTION INCLUDES

.1 Inspection and testing, administrative and enforcement requirements.

.2 Tests and mix designs.

.3 Mock-ups.

.4 Mill tests.

.5 Equipment and system adjust and balance.

1.2 INSPECTION

.1 Allow Departmental Representative access to Work. If part of Work is in preparation at locations other than Place of Work, allow access to such Work whenever it is in progress.

.2 Give timely notice requesting inspection if Work is designated for special tests, inspections or approvals by Departmental Representative instructions, or law of Place of Work.

.3 If Contractor covers or permits to be covered Work that has been designated for special tests, inspections or approvals before such is made, uncover such Work, have inspections or tests satisfactorily completed and make good such Work.

.4 Departmental Representative may order any part of Work to be examined if Work is suspected to be not in accordance with Contract Documents. If, upon examination such work is found not in accordance with Contract Documents, correct such Work and pay cost of examination and correction. If such Work is found in accordance with Contract Documents, Departmental Representative shall pay cost of examination and replacement.

1.3 INDEPENDENT INSPECTION AGENCIES

.1 Independent Inspection/Testing Agencies will be engaged by Departmental Representative for purpose of inspecting and/or testing portions of Work under Section 01 29 83, above and beyond those required of the Contractor. Cost of such services will be borne by Departmental Representative.

.2 Provide equipment required for executing inspection and testing by appointed agencies.

.3 Employment of inspection/testing agencies does not relax responsibility to perform Work in accordance with Contract Documents.

.4 If defects are revealed during inspection and/or testing, appointed agency will request additional inspection and/or testing to ascertain full degree of defect. Correct defect and irregularities as advised by Departmental Representative at no cost to Departmental Representative. Pay costs for retesting and reinspection.

1.4 ACCESS TO WORK

.1 Allow inspection/testing agencies access to Work, off site manufacturing and fabrication plants.

.2 Co-operate to provide reasonable facilities for such access.

1.5 PROCEDURES

.1 Notify appropriate agency and Departmental Representative in advance of requirement for tests, in order that attendance arrangements can be made.

.2 Submit samples and/or materials required for testing, as specifically requested in specifications. Submit with reasonable promptness and in an orderly sequence so as not to cause delay in Work.

.3 Provide labour and facilities to obtain and handle samples and materials on site. Provide sufficient space to store and cure test samples.

1.6 REJECTED WORK

.1 Remove defective Work, whether result of poor workmanship, use of defective products or damage and whether incorporated in Work or not, which has been rejected by Departmental Representative as failing to conform to Contract Documents. Replace or re-execute in accordance with Contract Documents.

.2 Make good other Contractor's work damaged by such removals or replacements promptly.

.3 If in opinion of Departmental Representative it is not expedient to correct defective Work or Work not performed in accordance with Contract Documents, Departmental Representative may deduct from Contract Amount difference in value between Work performed and that called for by Contract Documents, amount of which shall be determined by Departmental Representative.

1.7 REPORTS

.1 Submit 4 copies of inspection and test reports to Departmental Representative.

.2 Provide copies to Subcontractor of work being inspected or tested, manufacturer or fabricator of material being inspected or tested.

1.8 TESTS AND MIX DESIGNS

.1 Furnish test results and mix designs as may be requested.

.2 The cost of tests and mix designs beyond those called for in Contract Documents or beyond those required by law of Place of Work shall be appraised by Departmental Representative and may be authorized as recoverable.

1.9 MOCK-UPS

.1 Prepare mock-ups for Work specifically requested in specifications. Include for Work of all Sections required to provide mock-ups.

.2 Construct in all locations acceptable to Departmental Representative and as specified in specific Section.

1.9 MOCK-UPS (Cont'd)

.3 Prepare mock-ups for Departmental Representative's review with reasonable promptness and in an orderly sequence, so as not to cause any delay in Work.

.4 Failure to prepare mock-ups in ample time is not considered sufficient reason for an extension of Contract Time and no claim for extension by reason of such default will be allowed.

.5 If requested, Departmental Representative will assist in preparing a schedule fixing dates for preparation.

.6 Specification section identifies whether mock-up may remain as part of Work or if it is to be removed and when.

1.10 MILL TESTS

.1 Submit mill test certificates as required of specification Sections.

1.11 EQUIPMENT AND SYSTEMS

.1 Submit testing, adjusting and balancing reports for mechanical, electrical and building equipment systems.

.2 Submit Commissioning Documentation in accordance with Section 01 91 13.

PART 2 - PRODUCTS

2.1 NOT USED

.1 Not Used.

PART 3 - EXECUTION

3.1 NOT USED

.1 Not Used.

END

PART 1 - GENERAL

1.1 SUBMITTALS

.1 Provide submittals in accordance with Section 01 33 00.

1.2 INSTALLATION AND REMOVAL

.1 Provide temporary utilities controls in order to execute work expeditiously.

.2 Remove from site all such work after use.

1.3 WATER SUPPLY

.1 Departmental Representative will provide continuous supply of potable water for construction use. Be responsible for the careful and reasonable use of supplied water.

1.4 TEMPORARY HEATING AND VENTILATION

.1 Provide temporary heat and ventilation in enclosed areas as required to:
.1 Facilitate progress of Work.
.2 Protect Work and products against dampness and cold.
.3 Prevent moisture condensation on surfaces.
.4 Provide ambient temperatures and humidity levels for storage, installation and curing of materials.
.5 Provide adequate ventilation to meet health regulations for safe working environment.

.2 Maintain temperatures of minimum 10°C in areas where construction is in progress.

.3 Ventilating:
.1 Prevent accumulations of dust, fumes, mists, vapours or gases in areas occupied during construction.
.2 Provide local exhaust ventilation to prevent harmful accumulation of hazardous substances into atmosphere of occupied areas.
.3 Dispose of exhaust materials in manner that will not result in harmful exposure to persons.
.4 Ventilate storage spaces containing hazardous or volatile materials.
.5 Ventilate temporary sanitary facilities.

1.4 TEMPORARY HEATING AND VENTILATION (Cont'd)

.3 Ventilating:(Cont'd)

.6 Continue operation of ventilation and exhaust system for time after cessation of work process to assure removal of harmful contaminants.

.4 Maintain strict supervision of operation of temporary heating and ventilating equipment to:

.1 Conform with applicable codes and standards.

.2 Enforce safe practices.

.3 Prevent abuse of services.

.4 Prevent damage to finishes.

.5 Vent direct-fired combustion units to outside.

.5 Be responsible for damage to Work due to failure in providing adequate heat and protection during construction.

1.5 TEMPORARY POWER AND LIGHT

.1 Departmental Representative will pay for temporary power during construction for temporary lighting and operating of power tools. Be responsible for the careful and reasonable use of supplied power.

1.6 TEMPORARY COMMUNICATION FACILITIES

.1 Provide and pay for temporary telephone, fax, data hook up, lines/equipment necessary for own use and use of Departmental Representative.

1.7 FIRE PROTECTION

.1 Provide and maintain temporary fire protection equipment during performance of Work required by insurance companies having jurisdiction and governing codes, regulations and bylaws.

.2 Burning rubbish and construction waste materials is not permitted on site.

PART 2 - PRODUCTS

2.1 NOT USED .1 Not Used.

PART 3 - EXECUTION

3.1 NOT USED .1 Not Used.

END

PART 1 - GENERAL

1.1 SECTION INCLUDES

.1 Construction aids.

.2 Parking.

.3 Project identification.

1.2 SUBMITTALS

.1 Provide submittals in accordance with Section 01 33 00.

1.3 INSTALLATION AND REMOVAL

.1 Prepare site plan indicating proposed location and dimensions of area to be hoarded and used by Contractor, number of trailers to be used, avenues of ingress/egress to hoarded area and details of hoarded installation.

.2 Indicate use of supplemental or other staging area.

.3 Provide construction facilities in order to execute work expeditiously.

.4 Remove from site all such work after use.

1.4 HOISTING

.1 Provide, operate and maintain hoists/cranes required for moving of workers, materials and equipment. Make financial arrangements with Subcontractors for use thereof.

.2 Hoists/cranes shall be operated by qualified operator.

1.5 SITE STORAGE/LOADING

.1 Confine work and operations of employees to areas defined by Contract Documents. Do not unreasonably encumber premises with products.

.2 Do not load or permit to load any part of Work with a weight or force that will endanger the Work.

1.6 CONSTRUCTION PARKING

.1 Parking on site is limited and is to be designated by Facility Manager. Refer to additional information regarding parking in Document 'Facility Orientation for Construction and Emergency Service Contractors' included in the Appendices at the end of the Document.

.2 Provide and maintain adequate access to project site.

.3 If authorized to use existing roads for access to project site, maintain such roads for duration of Contract and make good damage resulting from Contractors' use of roads.

.4 Clean construction runways and taxi areas where used by Contractor's equipment.

1.7 EQUIPMENT, TOOL AND MATERIALS STORAGE

.1 Provide and maintain, in a clean and orderly condition, lockable weatherproof sheds for storage of tools, equipment and materials.

.2 Locate materials not required to be stored in weatherproof sheds on site in a manner to cause least interference with work activities.

1.8 SANITARY FACILITIES

.1 Use of Owner's existing assigned sanitary facilities are allowed. Coordinate with Departmental Representative as required for location of existing washrooms that can be used by the Contractor during the duration of the Project.

.2 Keep area and premises in sanitary condition.

1.9 CONSTRUCTION SIGNAGE

.1 No other signs or advertisements, other than warning signs, are permitted on site.

.2 Signs and notices for safety and instruction shall be in both official languages. Graphic symbols shall conform to CAN/CSA-Z321-96(R2006), Signs and Symbols for the Workplace.

.3 Maintain approved signs and notices in good condition for duration of project, and dispose

1.9 CONSTRUCTION SIGNAGE (Cont'd)

.3 (Cont'd) of off site on completion of project or earlier if directed by Departmental Representative.

1.10 CLEAN-UP

.1 Remove construction debris, waste materials, packaging material from work site daily.

.2 Clean dirt or mud tracked onto paved or surfaced roadways.

.3 Store materials resulting from demolition activities that are salvageable.

.4 Stack stored new or salvaged material.

PART 2 - PRODUCTS

2.1 NOT USED

.1 Not Used.

PART 3 - EXECUTION

3.1 NOT USED

.1 Not Used.

END

PART 1 - GENERAL

1.1 SECTION INCLUDES

.1 Barriers.

.2 Environmental Controls.

.3 Fire Routes.

1.2 INSTALLATION AND REMOVAL

.1 Provide temporary controls in order to execute Work expeditiously.

.2 Remove from site all such work after use.

1.3 HOARDING

.1 Erect temporary site hoarding enclosures using 15.9 mm thick Type X gypsum wall board on each side of steel studs spaced at 400 mm o.c., spanning to the underside of the concrete slab. Hoarding wall partition to meet 1 hour fire rating and intended ULC Design W453. Hoarding materials made of curtains or plastic tarps are not acceptable.

1.4 DUST TIGHT SCREENS

.1 Provide dust tight screens to localize dust generating activities, and for protection of workers, finished areas of Work.

.2 Maintain and relocate protection until such work is complete.

1.5 FIRE ROUTES

.1 Maintain access to property including overhead clearances for use by emergency response vehicles.

1.6 PROTECTION OF BUILDING FINISHES

.1 Provide protection for finished and partially finished building finishes and equipment during performance of Work.

.2 Provide protection for existing floor finishes, such as but not limited to existing corridors and lab floors. Existing floor finishes to be protected with 6 mil

1.6 PROTECTION OF BUILDING FINISHES (Cont'd)

.2 (Cont'd) polyethylene sheet and 3 mm thick masonite board with joints taped and smooth surface for any traffic occuring over mentioned floor areas.

.2 Provide necessary screens, covers, and hoardings.

.3 Confirm with Departmental Representative locations and installation schedule 3 days prior to installation.

.4 Be responsible for damage incurred due to lack of or improper protection.

PART 2 - PRODUCTS

2.1 NOT USED

.1 Not Used.

PART 3 - EXECUTION

3.1 NOT USED

.1 Not Used.

END

PART 1 - GENERAL

1.1 SECTION INCLUDES

.1 Product quality, availability, storage, handling, protection, and transportation.

.2 Manufacturer's instructions.

.3 Quality of Work, coordination and fastenings.

.4 Existing facilities.

1.3 REFERENCES

.1 Within text of specifications, reference may be made to reference standards.

.2 Conform to these standards, in whole or in part as specifically requested in specifications.

.3 If there is question as to whether any product or system is in conformance with applicable standards, Departmental Representative reserves right to have such products or systems tested to prove or disprove conformance.

.4 The cost for such testing will be born by Departmental Representative in event of conformance with Contract Documents or by Contractor in event of non-conformance.

.5 Conform to latest date of issue of referenced standards in effect on date of submission of Bids, except where specific date or issue is specifically noted.

1.4 QUALITY

.1 Products, materials, equipment and articles (referred to as products throughout specifications) incorporated in Work shall be new, not damaged or defective, and of best quality (compatible with specifications) for purpose intended. If requested, furnish evidence as to type, source and quality of Products provided.

.2 Defective products, whenever identified prior to completion of Work, will be rejected, regardless of previous inspections. Inspection

1.4 QUALITY (Cont'd)

.2 (Cont'd) does not relieve responsibility, but is precaution against oversight or error. Remove and replace defective products at own expense and be responsible for delays and expenses caused by rejection.

.3 Should any dispute arise as to quality or fitness of products, decision rests strictly with Departmental Representative based upon requirements of Contract Documents.

.4 Unless otherwise indicated in specifications, maintain uniformity of manufacture for any particular or like item throughout building.

.5 Permanent labels, trademarks and nameplates on products are not acceptable in prominent locations, except where required for operating instructions, or when located in mechanical or electrical rooms.

1.5 AVAILABILITY

.1 Immediately upon signing Contract, review product delivery requirements and anticipate foreseeable supply delays for any items. If delays in supply of products are foreseeable, notify Departmental Representative of such, in order that substitutions or other remedial action may be authorized in ample time to prevent delay in performance of Work.

.2 In event of failure to notify Departmental Representative at commencement of Work and should it subsequently appear that Work may be delayed for such reason, Departmental Representative reserves right to substitute more readily available products of similar character, at no increase in Contract Price or Contract Time.

1.6 METRIC SIZED MATERIALS

.1 SI metric units of measurement are used exclusively on the drawings and in the specifications for this project.

.2 The Contractor is required to provide metric products in the sizes called for in the Contract Documents except where a valid claim can be made that a particular product is not available on the Canadian market.

1.6 METRIC SIZED MATERIALS (Cont'd)

.3 Claims for exemptions from use of metric sized products shall be in writing and fully substantiated with supportive documentation. Promptly submit application to Departmental Representative for consideration and ruling. Non-metric sized products may not be used unless Contractor's application has been approved in writing by the Departmental Representative.

.4 Difficulties caused by the Contractor's lack of planning and effort to obtain modular metric sized products which are available on the Canadian market will not be considered sufficient reasons for claiming that they cannot be provided.

.5 Claims for additional costs due to provision of specified modular metric sized products will not be considered.

1.7 STORAGE, HANDLING AND PROTECTION

.1 Handle and store products in manner to prevent damage, adulteration, deterioration and soiling and in accordance with manufacturer's instructions when applicable.

.2 Store packaged or bundled products in original and undamaged condition with manufacturer's seal and labels intact. Do not remove from packaging or bundling until required in Work.

.3 Store products subject to damage from weather in weatherproof enclosures.

.4 Store cementitious products clear of earth or concrete floors, and away from walls.

.5 Keep sand, when used for grout or mortar materials, clean and dry. Store sand on wooden platforms and cover with waterproof tarpaulins during inclement weather.

.6 Store sheet materials and lumber on flat, solid supports and keep clear of ground. Slope to shed moisture.

.7 Store and mix paints in heated and ventilated room. Remove oily rags and other combustible debris from site daily. Take every precaution necessary to prevent spontaneous combustion.

1.7 STORAGE, HANDLING AND PROTECTION (Cont'd)

.8 Remove and replace damaged products at own expense and to satisfaction of Departmental Representative.

.9 Touch-up damaged factory finished surfaces to Departmental Representative's satisfaction. Use touch-up materials to match original. Do not paint over name plates.

1.8 TRANSPORTATION

.1 Pay costs of transportation of products required in performance of Work.

.2 Transportation cost of products supplied by Departmental Representative will be paid for by Departmental Representative. Unload, handle and store such products.

1.9 MANUFACTURER'S INSTRUCTIONS

.1 Unless otherwise indicated in specifications, install or erect products in accordance with manufacturer's instructions. Do not rely on labels or enclosures provided with products. Obtain written instructions directly from manufacturers.

.2 Notify Departmental Representative in writing, of conflicts between specifications and manufacturer's instructions, so that Departmental Representative may establish course of action.

1.10 QUALITY OF WORK

.1 Ensure Quality of Work is of highest standard, executed by workers experienced and skilled in respective duties for which they are employed. Immediately notify Departmental Representative if required Work is such as to make it impractical to produce required results.

.2 Do not employ anyone unskilled in their required duties. Departmental Representative reserves right to require dismissal from site, workers deemed incompetent or careless.

.3 Decisions as to standard or fitness of Quality of Work in cases of dispute rest solely with Departmental Representative, whose decision is final.

1.11 CO-ORDINATION

.1 Ensure cooperation of workers in laying out Work. Maintain efficient and continuous supervision.

.2 Be responsible for coordination and placement of openings, sleeves and accessories.

1.12 CONCEALMENT

.1 In finished areas, conceal pipes, ducts and wiring in floors, walls and ceilings, except where indicated otherwise.

.2 Before installation, inform Departmental Representative if there is interference. Install as directed by Departmental Representative.

1.13 REMEDIAL WORK

.1 Perform remedial work required to repair or replace parts or portions of Work identified as defective or unacceptable. Coordinate adjacent affected Work as required.

.1 Perform remedial work by specialists familiar with materials affected. Perform in a manner to neither damage nor put at risk any portion of Work.

1.14 LOCATION OF FIXTURES

.1 Consider location of fixtures, outlets, and mechanical and electrical items indicated as approximate.

.2 Inform Departmental Representative of conflicting installation. Install as directed.

1.15 FASTENINGS

.1 Provide metal fastenings and accessories in same texture, colour and finish as adjacent materials, unless indicated otherwise.

.2 Prevent electrolytic action between dissimilar metals and materials.

.3 Use non-corrosive hot dip galvanized steel fasteners and anchors for securing work in humid areas, unless stainless steel or other material is specifically requested in affected specification Section.

1.15 FASTENINGS (Cont'd)

.4 Space anchors within individual load limit or shear capacity and ensure they provide positive permanent anchorage. Wood, or any other organic material plugs are not acceptable.

.5 Keep exposed fastenings to a minimum, space evenly and install neatly.

.6 Fastenings which cause spalling or cracking of material to which anchorage is made are not acceptable.

1.16 FASTENINGS - EQUIPMENT

.1 Use fastenings of standard commercial sizes and patterns with material and finish suitable for service.

.2 Use heavy hexagon heads, semi-finished unless otherwise specified. Use No.304 stainless steel for humid areas.

.3 Bolts may not project more than one diameter beyond nuts.

.4 Use plain type washers on equipment, sheet metal and soft gasket lock type washers where vibrations occur. Use resilient washers with stainless steel.

1.17 PROTECTION OF WORK IN PROGRESS

.1 Prevent overloading of any part of building. Do not cut, drill or sleeve any load bearing structural member, unless specifically indicated without written approval of Departmental Representative.

1.18 EXISTING UTILITIES

.1 When breaking into or connecting to existing services or utilities, execute Work at times directed by local governing authorities, with minimum of disturbance to Work, and/or building occupants.

.2 Protect, relocate or maintain existing active services. When services are encountered, cap off in manner approved by authority having jurisdiction. Stake and record location of capped service.

PART 2 - PRODUCTS

2.1 NOT USED .1 Not Used.

PART 3 - EXECUTION

3.1 NOT USED .1 Not Used.

END

PART 1 - GENERAL

1.1 SURVEY REQUIREMENTS

.1 Establish lines and levels, locate and lay out, by instrumentation.

.2 Establish lines and levels for mechanical and electrical work.

1.2 EXISTING SERVICES

.1 Before commencing work, establish location and extent of service lines in area of Work and notify Departmental Representative of findings.

.2 Remove abandoned service lines within 2 m of structures. Cap or otherwise seal lines at cut-off points as directed by Departmental Representative.

1.3 LOCATION OF EQUIPMENT AND FIXTURES

.1 Location of equipment, fixtures and outlets indicated or specified are to be considered as approximate.

.2 Locate equipment, fixtures and distribution systems to provide minimum interference and maximum usable space and in accordance with manufacturer's recommendations for safety, access and maintenance.

.3 Inform Departmental Representative of impending installation and obtain approval for actual location.

.4 Submit field drawings to indicate relative position of various services and equipment when required by Departmental Representative.

1.4 RECORDS

.1 Maintain a complete, accurate log of control and survey work as it progresses.

.2 Record locations of maintained, re-routed and abandoned service lines.

PART 2 - PRODUCTS

2.1 NOT USED .1 Not Used.

PART 3 - EXECUTION

3.1 NOT USED .1 Not Used.

END

PART 1 - GENERAL

1.1 SUBMITTALS

.1 Submittals: in accordance with Section 01 33 00.

.2 Submit written request in advance of cutting or alteration which affects:
.1 Structural integrity of elements of project.
.2 Integrity of weather-exposed or moisture-resistant elements.
.3 Efficiency, maintenance, or safety of operational elements.
.4 Visual qualities of sight-exposed elements.
.5 Work of Owner or separate contractor.

.3 Include in request:
.1 Identification of project.
.2 Location and description of affected Work.
.3 Statement on necessity for cutting or alteration.
.4 Description of proposed Work, and products to be used.
.5 Alternatives to cutting and patching.
.6 Effect on Work of Owner or separate contractor.
.7 Written permission of affected separate contractor.
.8 Date and time work will be executed.

1.2 MATERIALS

.1 Required for original installation.

.2 Change in Materials: Submit request for substitution in accordance with Section 01 33 00.

1.3 PREPARATION

.1 Inspect existing conditions, including elements subject to damage or movement during cutting and patching.

.2 After uncovering, inspect conditions affecting performance of Work.

.3 Beginning of cutting or patching means acceptance of existing conditions.

1.3 PREPARATION (Cont'd)

.4 Provide supports to assure structural integrity of surroundings; provide devices and methods to protect other portions of project from damage.

.5 Provide protection from elements for areas which are to be exposed by uncovering work; maintain excavations free of water.

1.4 EXECUTION

.1 Execute cutting, fitting, and patching to complete Work.

.2 Fit several parts together, to integrate with other Work.

.3 Uncover Work to install ill-timed Work.

.4 Remove and replace defective and non-conforming Work.

.5 Provide openings in non-structural elements of Work for penetrations of mechanical and electrical Work.

.6 Execute Work by methods to avoid damage to other Work, and which will provide proper surfaces to receive patching and finishing.

.7 Employ original installer to perform cutting and patching for weather-exposed and moisture-resistant elements, and sight-exposed surfaces.

.8 Cut rigid materials using masonry saw or core drill. Pneumatic or impact tools not allowed on masonry work without prior approval.

.9 Restore work with new products in accordance with requirements of Contract Documents.

.10 Submit proposed materials, finishes and installation method for patching to Departmental Representative for approval, prior to patching.

.11 Refinish surfaces to match adjacent finishes: Refinish continuous surfaces to nearest intersection. Refinish assemblies by refinishing entire unit.

1.4 EXECUTION (Cont'd)

.12 Fit Work to pipes, sleeves, ducts, conduit, and other penetrations through surfaces.

.13 At penetration of fire rated wall, ceiling, or floor construction, completely seal voids with firestopping material in accordance with Section 07 84 00, full thickness of the construction element.

.14 Conceal pipes, ducts and wiring in floor, wall and ceiling construction of finished areas except where indicated otherwise.

1.5 WASTE MANAGEMENT AND DISPOSAL

.1 Separate waste materials for reuse, recycling, and composting.

PART 2 - PRODUCTS

2.1 NOT USED

.1 Not Used.

PART 3 - EXECUTION

3.1 NOT USED

.1 Not Used.

END

PART 1 - GENERAL

1.1 SECTION INCLUDES

.1 Progressive cleaning.

.2 Final cleaning.

1.2 PROJECT CLEANLINESS

.1 Maintain Work in tidy condition, free from accumulation of waste products and debris, other than that caused by Owner or other Contractors.

.2 Remove waste materials from site at regularly scheduled times or dispose of as directed by Departmental Representative. Do not burn waste materials on site.

.3 Make arrangements with and obtain permits from authorities having jurisdiction for disposal of waste and debris.

.4 Provide on-site containers for collection of waste materials and debris.

.5 Provide and use clearly marked separate bins for recycling. Refer to Section 01 74 20.

.6 Remove waste material and debris from site at end of each working day.

.7 Clean interior areas prior to start of finish work, and maintain areas free of dust and other contaminants during finishing operations.

.8 Store volatile waste in covered metal containers, and remove from premises at end of each working day.

.9 Provide adequate ventilation during use of volatile or noxious substances. Use of building ventilation systems is not permitted for this purpose.

.10 Use only cleaning materials recommended by manufacturer of surface to be cleaned, and as recommended by cleaning material manufacturer.

.11 Schedule cleaning operations so that resulting dust, debris and other contaminants

1.2 PROJECT CLEANLINESS (Cont'd)

.11 (Cont'd)
will not fall on wet, newly painted surfaces nor contaminate building systems.

.12 Contractor to steam clean existing carpet tiles and turn over to Owner for later reinstallation.

1.3 FINAL CLEANING

.1 When Work is Substantially Performed, remove surplus products, tools, construction machinery and equipment not required for performance of remaining Work.

.2 Mop clean floors to the satisfaction of the Departmental Representative.

.3 Remove waste products and debris other than that caused by others, and leave Work clean and suitable for occupancy.

.4 Prior to final review, remove surplus products, tools, construction machinery and equipment.

.5 Remove waste products and debris other than that caused by Owner or other Contractors.

.6 Remove waste materials from site at regularly scheduled times or dispose of as directed by Departmental Representative. Do not burn waste materials on site.

.7 Make arrangements with and obtain permits from authorities having jurisdiction for disposal of waste and debris.

.8 Clean and polish hardware, stainless steel, chrome, porcelain enamel, baked enamel, and mechanical and electrical fixtures. Replace broken, scratched or disfigured glass.

.9 Remove stains, spots, marks and dirt from decorative work, electrical and mechanical fixtures, furniture fitments, walls, and floors.

.10 Clean lighting reflectors, lenses, and other lighting surfaces.

1.3 FINAL CLEANING (Cont'd)

.11 HEPA vacuum clean and dust building interiors, behind grilles, louvres and screens.

.12 Wax, seal, shampoo or prepare floor finishes, as recommended by manufacturer.

.13 Inspect finishes, fitments and equipment and ensure specified workmanship and operation.

.14 Broom clean and wash exterior walks, steps and surfaces affected by Work of this Project.

.15 Remove dirt and other disfiguration from exterior surfaces affected by Work of this Project.

.16 Clean equipment and fixtures to a sanitary condition; clean or replace filters of mechanical equipment.

.17 Remove debris and surplus materials from crawl areas and other accessible concealed spaces.

PART 2 - PRODUCTS

2.1 NOT USED

.1 Not Used.

PART 3 - EXECUTION

3.1 NOT USED

.1 Not Used.

END

PART 1 - GENERAL

1.1 CONSTRUCTION & DEMOLITION WASTE

.1 Carefully deconstruct and source separate materials/equipment and divert, from D&C waste destined for landfill to maximum extent possible. Reuse, recycle, compost, anaerobic digest or sell material for reuse except where indicated otherwise. On site sales are not permitted.

.2 Source separate waste and maintain waste audits in accordance with the Environmental Protection Act, Ontario Regulation 102/94 and Ontario Regulation 103/94.
.1 Provide facilities for collection, handling and storage of source separated wastes.
.2 Source separate the following waste:
.1 Brick and portland cement concrete.
.2 Corrugated cardboard.
.3 Wood, not including painted or treated wood or laminated wood.
.4 Gypsum board, unpainted.
.5 Steel.
.6 Items indicated in Section 02 42 93, Deconstruction and Waste Products Workplan Summary.

.3 Submit a waste reduction workplan indicating the materials and quantities of material that will be recycled and diverted from landfill.
.1 Indicate how material being removed from the site will be reused, recycled, composted or anaerobically digested.

.4 Submit proof that all waste is being disposed of at a licensed land fill site or waste transfer site. A copy of the disposal/waste transfer site's license and a letter verifying that said landfill site will accept the waste must be supplied to Departmental Representative prior to removal of waste from the demolition site.

1.2 WASTE PROCESSING SITES

.1 Province of: Ontario.
.1 Ministry of Environment and Energy, 135 St. Clair Avenue West, Toronto, ON, M4V 1P5.
.2 Telephone: 800-565-4923 or 416-323-4321.
.3 Fax: 416-323-4682.

1.2 WASTE PROCESSING SITES (Cont'd)

.2 Recycling Council of Ontario: 215 Spadina Avenue, #225, Toronto, ON, M5T 2C7.
.1 Telephone: 416-657-2797.
.2 Fax: 416-960-8053.
.3 Email: rco@rco.on.ca.
.4 Internet: http://www.rco.on.ca/.

PART 2 - PRODUCTS

2.1 NOT USED

.1 Not Used.

PART 3 - EXECUTION

3.1 CANADIAN GOVERNMENTAL DEPARTMENTS CHIEF RESPONSIBILITY FOR THE ENVIRONMENT

.1 Government Chief Responsibility for the Environment.

Province	Address	General Inquiries	Fax
Ontario	Ministry of Environment and Energy 135 St Clair Avenue West Toronto, ON M4V 1P5	(416) 323-4321 (800) 565-4923	(416) 323-4682
	Environment Canada Toronto, ON	(416) 734-4494	

END

PART 1 - GENERAL

1.1 INSPECTION AND DECLARATION

.1 Contractor's Inspection: Contractor and all Subcontractors shall conduct an inspection of Work, identify deficiencies and defects, and repair as required to conform to Contract Documents.
.1 Notify Departmental Representative in writing of satisfactory completion of Contractor's Inspection and that corrections have been made.
.2 Request Departmental Representative's Inspection.

.2 Departmental Representative's Inspection: Departmental Representative and Contractor will perform inspection of Work to identify obvious defects or deficiencies. Contractor to correct Work accordingly.

.3 Completion: submit written certificate that following have been performed:
.1 Work has been completed and inspected for compliance with Contract Documents.
.2 Defects have been corrected and deficiencies have been completed.
.3 Equipment and systems have been tested, adjusted and balanced and are fully operational.
.4 Certificates required by utility companies have been submitted.
.5 Operation of systems have been demonstrated to Owner's personnel.
.6 Work is complete and ready for final inspection.

.4 Final Inspection: when items noted above are completed, request final inspection of Work by Departmental Representative and Contractor. If Work is deemed incomplete by Departmental Representative, complete outstanding items and request reinspection.

1.2 CLEANING

.1 In accordance with Section 01 74 11.

.2 Remove waste and surplus materials, rubbish and construction facilities from the site in accordance with authorities having jurisdiction.

PART 2 - PRODUCTS

2.1 NOT USED .1 Not Used.

PART 3 - EXECUTION

3.1 NOT USED .1 Not Used.

END

PART 1 - GENERAL

1.1 SECTION INCLUDES

.1 As-built, samples, and specifications.

.2 Equipment and systems.

.3 Product data, materials and finishes, and related information.

.4 Operation and maintenance data.

.5 Spare parts, special tools and maintenance materials.

.6 Warranties and bonds.

.7 Final site survey.

1.2 SUBMISSION

.1 Prepare instructions and data using personnel experienced in maintenance and operation of described products.

.2 Copy will be returned after final inspection, with Departmental Representative's comments.

.3 Revise content of documents as required prior to final submittal.

.4 Two weeks prior to Substantial Performance of the Work, submit to the Departmental Representative, four final copies of maintenance manuals and commissioning documentation in English and French.

.5 Ensure spare parts, maintenance materials and special tools provided are new, undamaged or defective, and of same quality and manufacture as products provided in Work.

.6 If requested, furnish evidence as to type, source and quality of products provided.

.7 Defective products will be rejected, regardless of previous inspections. Replace products at own expense.

.8 Pay costs of transportation.

1.3 FORMAT

.1 Organize data in the form of an instructional manual.

.2 Binders: vinyl, hard covered, 3 'D' ring, loose leaf 219 x 279 mm with spine and face pockets.

.3 When multiple binders are used, correlate data into related consistent groupings. Identify contents of each binder on spine.

.4 Cover: Identify each binder with type or printed title 'Project Record Documents'; list title of project and identify subject matter of contents.

.5 Arrange content by systems, under Section numbers and sequence of Table of Contents.

.6 Provide tabbed fly leaf for each separate product and system, with typed description of product and major component parts of equipment.

.7 Text: Manufacturer's printed data, or typewritten data.

.8 Drawings: provide with reinforced punched binder tab. Bind in with text; fold larger drawings to size of text pages.

1.4 CONTENTS - EACH VOLUME

.1 Table of Contents: provide title of project;
.1 Date of submission; names,
.2 Schedule of products and systems, indexed to content of volume.

.2 For each product or system:
.1 List names, addresses and telephone numbers of subcontractors and suppliers, including local source of supplies and replacement parts.

.3 Product Data: mark each sheet to clearly identify specific products and component parts, and data applicable to installation; delete inapplicable information.

.4 Drawings: supplement product data to illustrate relations of component parts of equipment and systems, to show control and flow diagrams.

1.4 CONTENTS - EACH VOLUME (Cont'd)

.5 Typewritten Text: as required to supplement product data. Provide logical sequence of instructions for each procedure, incorporating manufacturer's instructions specified in Section 01 45 00.

.6 Training: Refer to Section 01 79 00 and 01 91 13.

1.5 AS-BUILTS AND SAMPLES

.1 Maintain at the site for Departmental Representative, one record copy of:
.1 Contract Drawings.
.2 Specifications.
.3 Amendments and addenda.
.4 Change Orders and other modifications to the Contract.
.5 Reviewed shop drawings, product data, and samples.
.6 Field test records.
.7 Inspection certificates.
.8 Manufacturer's certificates.

.2 Store record documents and samples in field office apart from documents used for construction. Provide files, racks, and secure storage.

.3 Label record documents and file in accordance with Section number listings in List of Contents of this Project Manual. Label each document "PROJECT RECORD" in neat, large, printed letters.

.4 Maintain record documents in clean, dry and legible condition. Do not use record documents for construction purposes.

.5 Keep record documents and samples available for inspection by Departmental Representative.

.6 Turn one set, paper copy and electronic copy, of AS-BUILT drawings and specifications over to Departmental Representative on completion of work. Submit files on USB compatible with PWGSC encryption requirements or through email or alternate electronic file sharing service such as ftp, as directed by Departmental Representative.

.7 If project is completed without significant deviations from Contract drawings and

1.5 AS-BUILTS AND SAMPLES (Cont'd)

.7 (Cont'd)
specifications submit to Departmental Representative one set of drawings and specifications marked "AS-BUILT".

1.6 RECORDING ACTUAL SITE CONDITIONS

.1 Record information on set of black line opaque drawings, provided by Departmental Representative.

.2 Provide felt tip marking pens, maintaining separate colours for each major system, for recording information.

.3 Record information concurrently with construction progress. Do not conceal Work until required information is recorded.

.4 Contract Drawings and shop drawings: legibly mark each item to record actual construction, including:
.1 Measured depths of elements of foundation in relation to finish first floor datum.
.2 Measured horizontal and vertical locations of underground utilities and appurtenances, referenced to permanent surface improvements.
.3 Measured locations of internal utilities and appurtenances, referenced to visible and accessible features of construction.
.4 Field changes of dimension and detail.
.5 Changes made by change orders.
.6 Details not on original Contract Drawings.
.7 References to related shop drawings and modifications.

.5 Specifications: legibly mark each item to record actual construction, including:
.1 Manufacturer, trade name, and catalogue number of each product actually installed, particularly optional items and substitute items.
.2 Changes made by Amendments and change orders.

.6 Other Documents: maintain manufacturer's certifications, inspection certifications, field test records, required by individual specifications sections.

1.7 FINAL SURVEY

.1 Submit final site survey certificate in accordance with Section 01 71 00, certifying that elevations and locations of completed Work are in conformance, or non-conformance with Contract Documents.

1.8 EQUIPMENT AND SYSTEMS

.1 Each Item of Equipment and Each System: include description of unit or system, and component parts. Give function, normal operation characteristics, and limiting conditions. Include performance curves, with engineering data and tests, and complete nomenclature and commercial number of replaceable parts.

.2 Panel board circuit directories: provide electrical service characteristics, controls, and communications.

.3 Include installed colour coded wiring diagrams.

.4 Operating Procedures: include start-up, break-in, and routine normal operating instructions and sequences. Include regulation, control, stopping, shut-down, and emergency instructions. Include summer, winter, and any special operating instructions.

.5 Maintenance Requirements: include routine procedures and guide for trouble-shooting; disassembly, repair, and reassembly instructions; and alignment, adjusting, balancing, and checking instructions.

.6 Provide servicing and lubrication schedule, and list of lubricants required.

.7 Include manufacturer's printed operation and maintenance instructions.

.8 Include sequence of operation by controls manufacturer.

.9 Provide original manufacturer's parts list, illustrations, assembly drawings, and diagrams required for maintenance.

.10 Provide installed control diagrams by controls manufacturer.

1.8 EQUIPMENT AND SYSTEMS (Cont'd)

.11 Provide Contractor's coordination drawings, with installed colour coded piping diagrams.

.12 Provide charts of valve tag numbers, with location and function of each valve, keyed to flow and control diagrams.

.13 Provide list of original manufacturer's spare parts, current prices, and recommended quantities to be maintained in storage.

.14 Include test and balancing reports as specified in Section 01 45 00 and 01 91 13.

.15 Additional requirements: As specified in individual specification sections.

1.9 MATERIALS AND FINISHES

.1 Building Products, Applied Materials, and Finishes: include product data, with catalogue number, size, composition, and colour and texture designations.

.2 Instructions for cleaning agents and methods, precautions against detrimental agents and methods, and recommended schedule for cleaning and maintenance.

.3 Moisture-protection and Weather-exposed Products: include manufacturer's recommendations for cleaning agents and methods, precautions against detrimental agents and methods, and recommended schedule for cleaning and maintenance.

.4 Additional Requirements: as specified in individual specifications sections.

1.10 SPARE PARTS

.1 Provide spare parts, in quantities specified in individual specification sections.

.2 Provide items of same manufacture and quality as items in Work.

.3 Deliver to site and location as directed; place and store.

.4 Receive and catalogue all items. Submit inventory listing to Departmental

1.10 SPARE PARTS (Cont'd)

.4 (Cont'd) Representative. Include approved listings in Maintenance Manual.

.5 Obtain receipt for delivered products and submit prior to final payment.

1.11 MAINTENANCE MATERIALS

.1 Provide maintenance and extra materials, in quantities specified in individual specification sections.

.2 Provide items of same manufacture and quality as items in Work.

.3 Deliver to site and location as directed; place and store.

.4 Receive and catalogue all items. Submit inventory listing to Departmental Representative. Include approved listings in Maintenance Manual.

.5 Obtain receipt for delivered products and submit prior to final payment.

1.12 SPECIAL TOOLS

.1 Provide special tools, in quantities specified in individual specification section.

.2 Provide items with tags identifying their associated function and equipment.

.3 Deliver to site and location as directed; place and store.

.4 Receive and catalogue all items. Submit inventory listing to Departmental Representative. Include approved listings in Maintenance Manual.

1.13 STORAGE, HANDLING AND PROTECTION

.1 Store spare parts, maintenance materials, and special tools in manner to prevent damage or deterioration.

.2 Store in original and undamaged condition with manufacturer's seal and labels intact.

1.13 STORAGE, HANDLING AND PROTECTION (Cont'd)

.3 Store components subject to damage from weather in weatherproof enclosures.

.4 Store paints and freezable materials in a heated and ventilated room.

.5 Remove and replace damaged products at own expense and to satisfaction of Departmental Representative.

1.14 WARRANTIES AND BONDS

.1 Separate each warranty or bond with index tab sheets keyed to Table of Contents listing.

.2 List subcontractor, supplier, and manufacturer, with name, address, and telephone number of responsible principal.

.3 Obtain warranties and bonds, executed in duplicate by subcontractors, suppliers, and manufacturers, within ten days after completion of the applicable item of work.

.4 Except for items put into use with Owner's permission, leave date of beginning of time of warranty until the Date of Certificate of Substantial Performance is determined.

.5 Verify that documents are in proper form, contain full information, and are notarized.

.6 Co-execute submittals when required.

.7 Retain warranties and bonds until time specified for submittal.

PART 2 - PRODUCTS

2.1 NOT USED

.1 Not Used.

PART 3 - EXECUTION

3.1 NOT USED

.1 Not Used.

END

PART 1 - GENERAL

1.1 SECTION INCLUDES

.1 Procedures for demonstration and instruction of equipment and systems to Owner's O&M personnel.

.2 O&M personnel includes property facility manager, building operators, maintenenace staff, security staff and technical specialists, as applicable.

1.2 DESCRIPTION

.1 Demonstrate operation and maintenance of equipment and systems to Departmental Representative's personnel two weeks prior to date of substantial performance.

.2 Departmental Representative will provide list of personnel to receive instructions, and will coordinate their attendance at agreed-upon times.

1.3 QUALITY CONTROL

.1 When specified in individual Sections, require manufacturer to provide authorized representative to demonstrate operation of equipment and systems, instruct Owner's personnel, and provide written report that demonstration and instructions have been completed.

.2 Submit training schedule of time and date for demonstration and training of each item of equipment and each system in accordance with the training plan four weeks prior to designated dates, for Departmental Representative's approval.

.3 Submit reports within one week after completion of demonstration, that demonstration and instructions have been satisfactorily completed.

.4 Report shall give time and date of each demonstration and training, with list of persons present.

1.4 CONDITIONS FOR DEMONSTRATIONS

.1 Equipment has been inspected and put into operation in accordance with appropriate Section.

.2 Testing, adjusting, and balancing has been performed in accordance with Section 01 91 13 and equipment and systems are fully operational.

.3 Provide copies of completed operation and maintenance manuals for use in demonstrations and instructions.

1.5 PREPARATION

.1 Verify that conditions for demonstration and instructions comply with requirements.

.2 Verify that designated O&M personnel are present.

1.6 DEMONSTRATION AND INSTRUCTIONS

.1 Demonstrate start-up, operation, control, adjustment, trouble-shooting, servicing, and maintenance of each item of equipment at agreed upon times, at the designated location.

.2 Instruct personnel in all phases of operation and maintenance using operation and maintenance manuals as the basis of instruction.

.3 Review contents of manual in detail to explain all aspects of operation and maintenance.

.4 Prepare and insert additional data in operations and maintenance manuals when the need for additional data becomes apparent during instructions.

.5 Refer to individual Sections for specific demonstration and training requirements.

PART 2 - PRODUCTS

2.1 NOT USED .1 Not Used.

PART 3 - EXECUTION

3.1 NOT USED .1 Not Used.

END

Part 1 GENERAL

1.1 SUMMARY

.1 Section includes:

.1 Specification elements which are common to all commissioning and related specifications.

.2 Definitions, acronyms, and references.

.3 General commissioning requirements for the project including: components, equipment, and systems, requirements of Product Information (PI), Installation and Performance Verification (PV).

.4 Documentation support activities, tasks, milestones, and deliverables to complete the commissioning process and meet the overall commissioning objectives.

.2 Related Sections:

.1 Section 01 91 31 Commissioning (Cx) Plan

.2 Section 01 91 33 Commissioning Forms

.3 Section 01 91 41 Commissioning: Training

.4 Section 23 05 03 Mechanical Commissioning Specifications

.5 Division 21 / 22 / 23 / 25 Specifications

.6 Section 26 05 05 Electrical Commissioning Specifications

.7 Division 26 / 27 /28 Specifications

.3 Commissioning Titles and Roles

.1 Refer to specification section 01 91 31 Commissioning Plan 1.5 and 1.6 Composition, Roles and Responsibilities of Commissioning Team.

.4 Definitions:

.1 Contract Documents – Complete documents pertaining to the project construction process including but not limited to

drawings, specifications, addendums, SI's, CCN's, CDs and other directives.

.5 Acronyms:

.1 AFD - Alternate Forms of Delivery.

.2 BAS – Building Automation System (EMCS & BMS)

.3 CCN / CCO – Contemplated Change Notice / Order

.4 CD – Change Directive

.5 CL2 Containment Level 2

.6 Cx - Commissioning

.7 EMCS - Energy Monitoring and Control Systems (BAS & BMS)

.8 IBS – Integrated Building System

.9 M & E – Mechanical and Electrical

.10 MSDS – Material Safety Data Sheet

.11 OEM – Original Equipment Manufacturer

.12 O & M - Operation and Maintenance.

.13 OPR – Owners Project Requirements

.14 PI - Product Information (Forms)

.15 PM – Preventative Maintenance

.16 ICL - Installation Check Lists

.17 PV - Performance Verification (Forms)

.18 SI – Site Instructions

.19 TAB - Testing, Adjusting and Balancing

.20 WHMIS – Workplace Hazardous Materials Information System

1.2 REFERENCES

.1 American Water Works Association (AWWA)

.1 Related to plumbing water systems

.2 National Fire Protection Association (NFPA)

.1 NFPA© 13, Installation of Sprinkler Systems Handbook, 1013 Edition.

.2 NFPA© 14, Standard for the Installation of Standpipe and Hose Systems, 1010 Edition.

.3 NFPA© 10, Standard for the Installation of Stationary Fire Pumps for Fire Protection, 1013 Edition.

.3 Public Works and Government Services Canada (PWGSC)

.1 PWGSC – Commissioning Manual CP.1 – current edition.

.2 PWGSC – Commissioning Guidelines CP.2 – CP.13 – current edition.

.4 Underwriters' Laboratories of Canada (ULC)

.1 Standards Bulletin 1011-17, Standard for Integrated Systems Testing of Fire Protection and Life Safety Systems (CAN/ULC-S1001-11)

.5 American Society of Air Conditioning & Heating Engineers (ASHRAE)

.1 ASHRAE Standard 202-2013, The Commissioning Process for Buildings and Systems

.2 ASHRAE Guideline 0-2013, The Commissioning Process

.3 ASHRAE Guideline 1,1 2007, HVAC&R Technical Requirements for the Commissioning Process

.4 ASHRAE Guideline 4-2008 (RA 2013), Preparation of Operation and Maintenance Documentation for Building Systems

.5 ASHRAE Guideline 1.5-2012, The Commissioning Process for Smoke Control Systems

.6 Canadian Standards Association (CSA)

.1 CSA Z320-11 Building Commissioning Standard and Check Sheets

.7 Government of Canada

.1 .1 Canadian Biosafety Standards and Guidelines First Edition

.8 Refer to Specification Sections 21 / 22 / 23 / 25 / 26 / 27 / 28 for additional current references, standards, and guidelines.

.9 Current edition / version of the above references, standards, and guidelines at time of contract award and shall be used and remain in effect until the end of the project.

.10 General Contractor shall declare revision

date and number and shall have hard copies of all references, standards and guidelines available on site for review by Commissioning Manager for the duration of the project including warranty period.

1.3 GENERAL

.1 Commissioning is a disciplined planned process and program of tests, procedures and checks carried out systematically on components, equipment, systems and integrated systems of the finished project.

.2 Commissioning Objectives:

.1 To demonstrate that the CFIA’s and PWGSC's design and operational requirements are satisfied during the identification and delivery stages of the project and to support quality management of construction and installation through verification of building components, systems and environments at each phase of occupancy.

.2 To document the operational, maintenance and building management requirements.

.3 To minimize O&M costs through the careful selection of design solutions (for economy, reliability, durability, accessibility and, maintainability), construction materials, installation practices and, performance verification procedures.

.4 To verify that selected design solutions and the resultant built works protect the safety, health, welfare and comfort of the building occupants and O&M personnel.

.5 To define responsibility areas for meeting these operational requirements in the contract documents and include a process to demonstrate compliance.

.6 To document the design intent of the overall project and the proposed building systems and

components and to verify and demonstrate that all functional and operational requirements have been correctly interpreted in the design solution.

.7 To verify and demonstrate that all systems operate efficiently under all normal load conditions.

.8 To maintain operations of labs where portions are being decommissioned and re-commissioned during the construction phases.

.9 To provide comprehensive documentation of the operational, maintenance and building management.

.10 To implement a comprehensive training program. To transfer the completed works to the qualified and trained facility operators.

.11 Meet all Owner CL2 lab certification requirements including testing and documentation

.12 Manage all construction phasing and staged owner move in ensure a seamless continual operation for the facility until completion

.3 General Contractor is required to actively assist and participate in the commissioning process, operating equipment and systems, troubleshooting, making adjustments and contributing documentation and support materials as required.

.1 Systems are to be operated at full capacity under various modes to determine correct and consistent functionality at peak design efficiency / effectiveness. Systems are to interact with each other as intended in accordance with contract documents and design criteria.

.2 During this process, adjustments are to be made to enhance performance or meet environmental and user requirements.

.3 All adjustments are to be recorded in the commissioning

documentation.

.4 Contractor shall fully demonstrate all elements of equipment / systems performance.

.4 Performance and operation requirements are to be met through commissioning activities developed from the design criteria.

.5 Commissioning will be executed in a phased approach and may require additional work upon execution of the final phase to ensure all systems as per the design intent

.1

1.4 COMMISSIONING OVERVIEW

.1 For project specific commissioning responsibilities refer to specification 01 91 31 Commissioning Plan Section 1.5 and 1.6 Composition, Roles and Responsibilities of Commissioning Team.

.2 Commissioning is conducted in concert with activities performed during the construction stage of the project delivery. Commissioning ensures the facility is constructed and proven to operate satisfactorily under weather, environmental and occupancy conditions to meet functional and operational requirements. Commissioning includes the transfer of critical knowledge to facility operational personnel.

.3 Commissioning including provision of documentation / deliverables / training / closeout shall be line items on the contractor's cost breakdown and project draw.

.4 Contractor shall provide a commissioning draw breakdown by key milestones to the Commissioning Manager for review and approval. Contractor shall revise commissioning draw as per Commissioning Manager comments.

.5 Commissioning activities supplement field quality and testing procedures described in relevant technical sections.

.6 General Contractor Commissioning Coordinator shall issue Interim Acceptance Certificate for each phase when:

.1 Completed commissioning documentation has been received, reviewed for suitability and approved by Commissioning Manager.

.2 Components, equipment, and systems have been commissioned.

.3 O & M training demonstration has been completed.

.4 Evaluation report has been submitted.

.5 PWSGC partial completion requirements including demonstration, preventative maintenance, and documentation

.6

1.5 NON-CONFORMANCE TO PERFORMANCE VERIFICATION REQUIREMENTS

.1 General Contractor shall correct all deficiencies and re-verify equipment and system operation should equipment, system components, integrated systems and associated controls be incorrectly installed or malfunction during commissioning or performance testing Commissioning Manager General Contractor shall document all re-work, adjustment and re-test activities and results.

.2 Costs for all corrective work, additional tests, inspections, to determine acceptability and proper performance of such items shall be borne by the General Contractor. The above costs may be in form of progress payment reductions or hold-back assessments.

1.6 COMMISSIONING REVIEW

.1 Before construction starts the General Contractor shall:

.1 Review contract documents and confirm by writing to Commissioning Manager;

.1 Adequacy of provisions for commissioning.

.2 Aspects of design and installation which impact successful execution of commissioning objectives and deliverables.

.3 Acceptance of draft Commissioning Plan.

.4 Acceptance of draft Training Plan.

.2 During construction the General Contractor shall:

.1 Coordinate and provide required resources and provisions to execute commissioning requirements.

.3 During commissioning General Contractor and sub-contractors shall:

.1 Fully understand commissioning requirements and procedures.

.2 Understand complete design criteria, intent and special features.

.3 Submit shop drawings to Commissioning Manager for review.

.4 Provide comments on Commissioning Plan.

.5 Update and manage PI Forms

.6 Develop comprehensive Installation Check Lists (ICL).

.7 Update commissioning schedule and construction schedule.

.8 Ensure installation of related components, equipment, sub-systems, and systems are complete.

.9 Submit complete OEM / contractor start-up documentation to Commissioning Manager.

.10 Complete TAB activities on air and hydronic systems and submit all final TAB reports to Commissioning Manager for review and approval.

.11 Execute Performance Verification (PV) activities and report forms for all systems.

.12 Ensure "As-Built" system schematics are available for review at all times.

.13 Participate in commissioning meetings. Contractor and sub-contractors are to participate as required or invited.

.14 Ensure all commissioning documents are shelf-ready.

.4 Inform Commissioning Manager in writing of discrepancies and deficiencies of finished works.

1.7 CONFLICTS

.1 Notify Commissioning Manager in writing

identifying conflicts between requirements of this and other commissioning related specified sections.

.2 Notify Commissioning Manager in writing identifying all commissioning related conflicts on all contract / construction documents.

.3 Failure to report conflict and obtain clarification will result in application of the most stringent requirement. General Contractor and Contractor to execute to the most stringent requirements.

1.8 COMMISSIONING SUBMITTALS

.1 Submittals: in accordance with Section 01 33 00 Submittal Procedures.

.2 General Contractor to submit

.1 Name of General Contractors Commissioning Coordinator.

.2 List of commissioning documentation.

.3 Preliminary commissioning schedule.

.3 Provide in writing at the time of submittal a request to the Commissioning Manager for deviations from the requirements of the contract documents. Allow ten (10) business days for Commissioning Manager’s review of each submission.

.4 Submit proposed commissioning procedures to Commissioning Manager to obtain written approval. Allow ten (10) business days for Commissioning Manager’s review of each submission.

.5 Provide additional documentation relating to commissioning processes required by Commissioning Manager.

.6 Revise all commissioning documents / programs as per Commissioning Manager recommendations and comments.

1.9 COMMISSIONING PROGRAM DOCUMENTATION

.1 Provide draft and final of all commissioning documentation to Commissioning Manager.

.2 Commissioning program documents shall include the commissioning phases and package components as a minimum and shall all be approved by the Commissioning Manager.

.3 Commissioning Manager to review all commissioning documentation.

.4 Refer to Section 01 91 33 Commissioning Forms for requirements and instructions for use of the following:

.1 Product Information (PI) Forms

.2 Installation Check Lists (ICL)

.3 Performance Verification (PV) Forms.

.5 Provide additional commissioning program documentation as requested by the Commissioning Manager including but not limited to:

.1 Component / equipment / system submittals

.2 System integration project specific wiring diagrams

1.10 COMMISSIONING SCHEDULE

.1 General Contractor to develop detailed critical path Gantt chart schedule with key commissioning milestones and activities provided by the Commissioning Manager. The General Contractor shall incorporate the provided commissioning milestones and activities into the overall construction schedule prior to issuing for review. The commissioning schedule along with the completion schedule shall be submitted to the Commissioning Manager and PWGSC Project Manager for review. Schedule shall include commissioning activities, milestones, deliverables, phasing of systems, Client move, and risks.

.2 General Contractor to provide adequate time for commissioning activities prescribed in technical sections and commissioning sections on a system by system basis including but not limited to:

.1 Submit all draft and final forms

.2 Complete all draft and final PI forms

.3 Execute all PI forms

.4 Complete all draft and final PV forms

.5 Submit BAS commissioning package

.6 Execute all PV forms

.7 Execute Training and Demonstration

.8 Submit Preliminary TAB report

.9 Submit Final TAB report

.10 Verification of reported results.

.11 Test systems including witness & demonstration

.12 Re-verify, re-test and re-commission all repairs / adjustments / re-work

.13 Conduct CL2 and Integrated Building System Testing

1.11 COMMISSIONING MEETINGS

.1 Convene commissioning meetings following project meetings refer to:

.1 Section 01 32 16 Construction Progress Schedule – Bar (GANTT) Chart

.2 Meeting purpose: plan and develop the commissioning process, monitor progress, identify deficiencies and other issues, resolve issues and new commissioning related business.

.3 Continue commissioning meetings on regular basis until all commissioning deliverables have been addressed.

.4 Commissioning meeting detail include:

.1 Intent is to ensure commissioning team members, including contractors, subcontractors, OEM, suppliers and vendors, understand roles and responsibilities with respect to the Commissioning Manager and consulting vendors.

.2 Commissioning Manager shall lead the Cx Meetings.

.3 Review of progress, discuss schedule of equipment start-up activities and prepare for commissioning issues.

.4 Review of duties and responsibilities of contractor and subcontractors, addressing delays and potential problems.

.5 Determine the degree of involvement of trades and OEM representatives in the commissioning process.

.5 Commissioning meetings will be at the call of

the Commissioning Manager and as required during equipment start-up and functional testing period.

.6 Commissioning Manager shall chair, record and distribute minutes.

.7 Contractor, subcontractors and manufacturer representatives shall be present at commissioning meetings in which business impacts them.

.8 Ensure all commissioning meeting attendees are prepared for commissioning meeting agenda.

1.12 STARTING AND TESTING

.1 Contractor assumes liabilities and costs for inspections; including disassembly and re-assembly after approval, starting, testing and adjusting, and providing supply of testing equipment.

1.13 WITNESSING OF STARTING AND TESTING (COMPONENT / EQUIPMENT / SYSTEM)

.1 Provide written notice ten (10) business days prior to commencement of all start-up and testing activities to Commissioning Manager.

.2 Commissioning Manager to witness selected start-up and testing activities as they see fit.

.3 General Contractor Commissioning Coordinator shall be present at all start-ups and tests performed and documented by sub-contractors, sub-trades, suppliers and equipment manufacturers. A separate start-up timing matrix may be used.

1.14 OEM MANUFACTURER’S INVOLVEMENT

.1 Factory testing: OEM manufacturer to:

.1 Coordinate time and location of testing.

.2 Provide testing documentation one (1) month prior to test for approval by Commissioning Manager.

.3 Revise and resubmit testing documents as required.

.4 Arrange, coordinate and assist Commissioning Manager in witnessing factory tests.

.5 Ensure OEM’s return to complete, re-work, verify and sign-off on all noted issues.

.6 OEM manufacturer’s factory test reports are to be supplied and

approved by Commissioning Manager and PWGSC Project Manager prior to release / shipment of equipment from OEM manufacturer's production / test facility.

.7 Obtain written approval of test results and documentation from Commissioning Manager before equipment release and delivery.

.2 Obtain OEM manufacturer's installation, start-up and operations instructions prior to installation and start-up of components, equipment and systems and review with Commissioning Manager.

.3 Ensure all OEM installation / start-up / operational documentation is available in advance for Commissioning Manager review.

.1 Compare completed installation with OEM manufacturer's published data, record discrepancies, and review with manufacturer.

.2 Ensure OEM's return to complete, re-work, verify and sign-off on all noted issues.

.4 Integrity of warranties:

.1 OEM to provide written acceptance of all installation, start-up and energization processes as required by the specifications.

.2 Use OEM manufacturer's trained start-up personnel where specified or required to maintain integrity of warranties.

.3 Verify with OEM manufacturer the testing procedures and plans as specified will not void or impact warranties.

.4 Perform all required / planned preventative maintenance and service procedures during all operating periods to maintain equipment performance and operation and maintain integrity of warranties.

.5 Maintain all preventative maintenance records during operating period and submit with final commissioning submission.

.5 Qualifications of OEM manufacturer's personnel:

.1 Experience in design, installation, start up, operation, preventative maintenance, trouble shooting and fine tuning of equipment and systems.

.2 Ability to provide system integration support including:

.1 Hard I/O

.2 Fail safe I/O

.3 Communication (BACnet / Modbus)

.4 Documentation

.5 Revised and project specific wiring diagrams

.3 Ability to interpret test and performance results accurately.

.4 Ability to make clear concise recommendations to improve functional performance to meet construction and contract documents

.5 Ability to report results in clear, concise, and logical manner.

1.15 EQUIPMENT / SYSTEM READINESS PROCEDURES

.1 Verify that components, equipment and systems are clean, installation complete and operating in normal and safe manner prior to conducting start-up and PV testing.

.2 Conduct start-up and PV testing in the following distinct phases:

.1 Included in delivery and installation:

.1 Verification of conformity to specification, approved shop drawings and completion of PI report forms.

.2 Visual inspection and written report of quality of installation utilizing ICLs.

.2 Start-up: follow OEM accepted start-up procedures.

.3 System PV testing: Execute and record results of performance verification of components,

equipment and systems.

.1 Re-work issues or deficiencies identified during PV testing.

.2 Repeat PV tests after correcting deficiencies.

.4 Post-substantial completion PV testing: Includes fine-tuning and seasonal / deferred testing.

.3 Obtain approval from Commissioning Manager after each distinct phase has been completed and before commencing next phase.

.4 Failure to follow accepted start-up procedures will result in re-evaluation of equipment by an independent testing agency selected by Commissioning Manager. If results reveal that equipment start-up was not in accordance with requirements, and resulted in damage to equipment, implement following:

.1 Minor equipment/systems: implement corrective measures approved by Commissioning Manager.

.2 Major equipment/systems: if evaluation report concludes that damage is minor, implement corrective measures approved by Commissioning Manager.

.3 If evaluation report concludes that major damage has occurred, Commissioning Manager shall reject equipment.

.1 Rejected equipment to be removed from site and replace with new at no additional cost to contract.

.2 Subject new equipment/systems to specified start-up procedures.

1.16 START-UP DOCUMENTATION

.1 For all major components and equipment assemble start-up documentation and submit to Commissioning Manager for approval.

.2 Start-up documentation to include, but is not limited to:

.1 Factory and on-site test certificates for specified equipment.

.2 Pre-start-up inspection reports.

.3 Signed installation / start-up check lists.

.4 Start-up reports,

.5 Step-by-step description of complete start-up procedures, to permit Owner or operational staff to repeat start-up at any time.

.3 Applies to assets of significant value and critical operations including but not limited to:

.1 Variable Air Volume Boxes

.2 Terminal Units

.3 BMS and Hard Controls and systems

.4 Plumbing Equipment

.5 Sprinkler and Standpipe Systems

.6 Transformers

.7 Switchgear

.8 Panel boards

.9 MCCs

.10 Uninterruptible Power Systems

.11 Lighting and Emergency Lighting

1.17 OPERATION AND MAINTENANCE OF EQUIPMENT AND SYSTEMS

.1 After start-up, operate and maintain components, equipment and systems as directed by equipment / system OEM and industry standards.

.2 With assistance of OEM develop written preventative maintenance and service program and submit to Commissioning Manager for approval before implementation.

.3 Operate and maintain components, equipment, and systems for the length of time required for commissioning to be completed and until issuance of certificate of interim acceptance and building turnover.

1.18 TEST RESULTS

.1 If start-up or PV testing produces unacceptable results, the trade contractor or subcontractor shall re-work, replace and repeat specified start up or PV procedures until acceptable results are achieved. These processes are to be documented and recorded.

.2 Provide manpower, materials, and assume costs for all re-commissioning.

1.19 CONTRACTOR’S INSTRUMENTS /

.1 Submit to Commissioning Manager for review

EQUIPMENT

and approval as requested:

.1 Complete list of measuring and recording instruments proposed to be used.

.2 Listed data to include, serial number, current calibration certificate, calibration date, calibration expiry date and calibration accuracy, instrument specifications, and cut sheet(s).

.3 Resubmit new / added instruments as they are added and reviewed calibration certificates on a regular basis.

.4 Maintain current calibration certificates on an annual basis.

.2 Provide all equipment as required such as but not limited to:

.1 2-way radios / communication tool.

.2 Ladders / lift access.

.3 Additional equipment as required to complete work.

1.20 COMMISSIONING PERFORMANCE VERIFICATION

.1 Carry out component, equipment and system performance verification:

.1 Under actual operating conditions, over entire operating range, and in all modes.

.2 Under accepted simulated operating conditions, over entire operating range, in all modes, if actual conditions are not possible.

.3 On independent systems and interacting systems.

.2 PV testing procedures are to be repeatable and reported results are to be verifiable.

.3 Follow equipment OEM manufacturer’s operating instructions.

.4 BAS trending to be available and fully functional including archiving and printing as supporting documentation for performance verification.

1.21 WITNESSING COMMISSIONING

.1 Commissioning Manager to witness select activities and verify results.

1.22 AUTHORITIES

.1 Where specified start-up, testing or

HAVING JURISDICTION

commissioning procedures duplicate verification requirements of authority having jurisdiction, arrange for authority to witness procedures so as to avoid duplication of tests and to facilitate expedient acceptance of facility.

.2 Obtain certificates of approval, acceptance and compliance with rules and regulation of authority having jurisdiction.

.3 Submit copies to Commissioning Manager within five (5) business days of test and include with Commissioning Report.

1.23 COMMISSIONING CONSTRAINTS

.1 Since access into secure or sensitive areas will be very difficult after occupancy it is necessary to complete all commissioning of occupancy, weather, and seasonal sensitive equipment and systems in all areas before issuance of the Interim Certificate, using, if necessary, simulated thermal loads.

1.24 EXTRAPOLATION OF RESULTS

.1 All commissioning activities which require extrapolation of results shall be clearly identified in the Commissioning Plan and identified within the commissioning documentation prior to issuing extrapolated results.

.2 The extrapolation process and formula shall be documented and provided in writing to the Commissioning Manager.

.3 Where commissioning cannot be conducted under near-rated or near-design conditions due to weather, occupancy, or seasonal-sensitive equipment, extrapolate part-load results to design conditions, extrapolation of results shall be approved by the Commissioning Manager and must be in accordance with equipment and systems OEM instructions, using OEM data, with OEM assistance and using approved formulae.

.4 All extrapolation of test results to be fully disclosed and reviewed with the Commissioning Manager in advance of submission of actual test data and results.

1.25 EXTENT OF VERIFICATION

.1 High Risk / Key Areas (lab spaces) areas:

.1 Provide manpower and instrumentation to verify one hundred percent (100%) of reported

results with Commissioning Manager.

.2 Elsewhere:

.3 Provide manpower and instrumentation to verify up to thirty percent (30%) of reported results with Commissioning Manager, unless specified otherwise in other sections.

.4 General Contractor to declare system to be verified for each visit.

.2 Number and location to be at sole discretion of Commissioning Manager.

.3 Conduct repeat verification tests under same conditions as original verification tests, using the same test equipment, and instrumentation.

.4 Review and repeat complete commissioning of systems if inconsistencies found in more than five percent (5%) of reported results.

.5 Perform additional commissioning until results are acceptable to Commissioning Manager.

1.26 REPEART VERTIFICATIONS

.1 Assume all costs incurred by Commissioning Manager for third and subsequent verifications where:

.1 Verification of reported results fails to receive Commissioning Manager’s approval.

.2 Repetition of second verification again fails to receive approval.

.3 Commissioning Manager deems General Contractor’s request for second verification was premature.

.2 Pay all additional costs for Commissioning Manager to perform additional issue review and verification.

1.27 SUNDRY CHECKS AND ADJUSTMENTS

.1 Make adjustments and changes which become apparent as commissioning activities proceed.

.2 Document and record all adjustments and changes.

.3 Perform static and operational checks as applicable and as required.

1.28 ISSUES, DEFICIENCIES, FAULTS, DEFECTS

.1 Intent is for a transparent process with focus on a well-documented process and subsequent audit trail.

.2 Correct issues and deficiencies found during start-up and commissioning to satisfaction of Commissioning Manager (includes documentation and physical correction).

.3 Report problems, faults or defects affecting commissioning to Commissioning Manager in advance in writing. Suspend commissioning processes until problems are rectified. Proceed with written approval from Commissioning Manager.

.4 Issues list shall be maintained by the General Contractor Commissioning Agent.

1.29 COMPLETION OF COMMISSIONING

.1 Upon completion of performance verification testing leave all systems in normal automatic operating mode.

.2 Any systems which cannot be left in full automatic operation are considered failed to prove intended performance and are to be clearly noted as such.

.3 Except for warranty and seasonal verification activities specified in commissioning specifications, complete commissioning prior to issuance of Interim Certificate of Completion.

.4 Commissioning to be considered complete when contract commissioning deliverables have been submitted and accepted by Commissioning Manager.

1.30 ACTIVITIES UPON COMPLETION OF COMMISSIONING

.1 When changes are made to baseline components or system settings established during commissioning process, provide updated commissioning form for affected item.

1.31 TRAINING

.1 Shall be in accordance with Section 01 91 41 - Commissioning– Training.

1.32 MAINTENANCE MATERIALS, SPARE PARTS, SPECIAL TOOLS

.1 Deliver, and document the supply of maintenance materials as per specific technical specifications, including but not limited to:

.1 Spare parts

.2 Fuses

.3 Touch-up paint

.4 Special tools and instruments as specified in contract documents

.5 Keys

1.33 OCCUPANCY

.1 Cooperate fully with Commissioning Manager during stages of acceptance and occupancy of facility.

.2 Support and manage phased occupancy and move in.

1.34 INSTALLED INSTRUCMENTATION

.1 Use instruments installed under contract for TAB and PV if:

.1 Accuracy complies with these specifications.

.2 Calibration certificates have been reviewed and approved by the Commissioning Manager.

.2 Calibrated BAS sensors may be used to obtain performance data provided that sensor calibration has been completed, documented and accepted in advance by Commissioning Manager.

.3 Contractor to request in writing a detailed list of points to be used including calibration procedures as requested.

1.35 PERFORMANCE VERIFICATION TOLERANCES

.1 Application tolerances:

.1 Specified range of acceptable deviations of measured values from specified values or specified design criteria. Except for special areas, to be within plus and minus five percent (+/-5%) of specified values.

.2 Instrument accuracy tolerances:

.1 To be of higher order of magnitude than equipment or system being tested.

.3 Measurement tolerances during verification:

.1 Unless otherwise specified actual values to be within plus and minus five percent (+/- 5%) of recorded values.

1.36 OWNER’S PERFORMANCE

.1 Performance testing of equipment and system by Commissioning Manager will not relieve

TESTING

General Contractor from compliance with specified start-up and testing procedures.

1.37 AUDIO / VIDEO RECORDING OF TRAINING AND DEMONSTRATION

.1 Refer to Section 01 91 41 Commissioning: Training section 1.10 Audio / Video Recording of Training.

1.38 PROGRESS DRAWS

.1 The General Contractor shall include in their bid the cost of implementing the commissioning program.

.2 To ensure the Contractor completes their responsibilities for the commissioning program a line item of eight percent (8%) shall be put in the mechanical and electrical progress draw for this project. For purposes on monitoring progress addition lines of detail for specific commissioning activities will be required. The Contractor’s shall be responsible for determining their actual costs for the commissioning program.

.1 The commissioning related draw will be distributed as follows:

.1	Shop drawings	2%
.2	PI Form	1%
.3	PV Form	2%
.4	Functional Performance Testing 1%	
.5	O & M Package %	1
.6	Training & demonstration %	1

.3 The General Contractor will include these funds on the monthly draw based as the commissioning progress and completion.

Part 2 PRODUCTS

2.1 NOT USED

NOT USED

Part 3 EXECUTION

3.1 NOT USED

.1 NOT USED

END OF SECTION

Part 1 GENERAL

1.1 SUMMARY

.1 Section Includes:

.1 Description of overall structure of Commissioning Plan and roles and responsibilities of the Commissioning Team.

.2 Related Sections:

.1 Sections 01 91 13 Commissioning (Cx) General Requirements

.2 Section 01 91 33 Commissioning Forms

.3 Section 01 91 41 Commissioning: Training

.4 Section 23 05 03 Mechanical Commissioning Specifications

.5 Division 21 / 22 / 23 / 25 Specifications

.6 Section 26 05 05 Electrical Commissioning Specifications

.7 Division 26 / 27 /28 Specifications

.8 Other Related Technical Specifications

.3 Definitions:

.1 Refer to Section 01 91 13 Commissioning (Cx) General Requirements Section 1.1.4.

.4 Acronyms:

.1 Refer to Section 01 91 13 Commissioning (Cx) General Requirements Section 1.1.5.

1.2 REFERENCES

.1 Refer to Section 01 91 13 Commissioning (Cx) General Requirements Section 1.2 for current reference sections.

1.3 GENERAL

.1 Use this Commissioning Plan Specification as the master planning document and general description for the commissioning process and plan to include:

.1 Organization outline, scheduling, allocation of resources, and

documentation, pertaining to implementation of commissioning.

.2 Communicates responsibilities of team members involved in commissioning scheduling, documentation requirements, and verification procedures.

.3 Deliverables relating to O & M, process and administration of commissioning.

.4 Description of process of verification process to ensure the construction works meets owner and design requirements.

.5 Process to provide a complete functional system prior to issuance of Certificate of Occupancy.

.6 The Commissioning Plan is a management tool that sets out scope, standards, roles and responsibilities, expectations, deliverables, and provides:

.7 Overview of Commissioning.

.8 Process and methodology for successful commissioning.

.2 Commissioning terms used in this Section:

.1 Bumping: short term start-up to prove ability to start and prove correct rotation.

.2 Deferred / Seasonal Commissioning: commissioning activities delayed for reasons beyond Contractor's control including but not limited to: due to lack of occupancy, weather / ambient conditions, and need for heating / cooling loads.

1.4 DEVELOPMENT OF COMMISSIONING PLAN

.1 A draft Commissioning Plan will be supplied to the General Contractor.

.2 The General Contractor is responsible to review the Commissioning Plan and provide written comments if any elements cannot be executed as specified for the duration of the project.

.3 There will be two (2) phases to the Commissioning Plan development; the Draft Phase and Revision Phase.

.4 These phases shall include any:

.1 Changes resulting from Client program modifications.

.2 Approved design and construction changes.

.5 The Draft Phase occurs when the Commissioning Plan development is less than eighty percent (80%) complete and in review with the client project team.

.6 The Revision Phase occurs once the Commissioning Plan is greater than or equal to eighty percent (80%) complete and construction phase has started.

.7 Clearly note all updates to the Draft Commissioning Plan. Each Draft and Revision shall indicate draft / revision number and date.

.8 Commissioning Plan shall:

.1 Identify all parties forming the commissioning team.

.2 Identify roles and responsibilities of commissioning team members.

.3 Establish communications and reporting protocol(s).

.4 Identify systems that are to be commissioned.

.5 Outline commissioning objectives.

.6 Define all deliverables relating to commissioning process such as but not limited to:

.1 Contractor’s start-up, installation checklists (ICL) and product information (PI) related documentation (i.e. Mechanical, Electrical, BAS and Life Safety)

.2 Performance verification (PV plan development)

.3 Execute inspections and record results of performance verification (PV) plans for equipment, systems and integrated systems.

.4 Documentation related to the O & M manual development

.1 As-Built documents

.2 Warranty information

.3 Inventory of spare parts

.4 Special tools and maintenance materials

.5 Current up to date MMS identification system

.5 O & M training plan and demonstration

.6 Activities during the warranty period

.7 Final commissioning report

.9 General Contractor to submit all commissioning support documents to the Commissioning Manager when 100% complete and within two (2) weeks of execution.

1.5 COMPOSITION, ROLES AND RESPONSIBILITIES OF COMMISSIONING TEAM

.1 PWGSC Project Manager; has overall responsibility for the project and is the sole point of contact between the Client, the Commissioning Manager, the PWGSC Design and Quality Assurance Authority and all other members of the Project Team.

.2 PWGSC Project Manager; is responsible for initiating the project on behalf of the Owner, for accepting the facility from the PWGSC Project Manager and for handing it over to the Property Manager for operation..

.3 Construction Team

.1 Consists of General Contractor, contractor, sub-contractors, suppliers and other support disciplines and trades, and are responsible for construction/installation in accordance with the contract documents, including testing and the delivery of training, required documentation.

.2 For administrative, co-ordination purposes, the General Contractor and Contractor shall assign one person as the point of contact with the Commissioning Manager and the PWGSC Project Manager.

.4 General Contractor (GC):

.1 The General Contractor shall be responsible to schedule the commissioning activities with the Contractors. The GC will integrate all commissioning activities into the master schedule including all phasing aspects of the construction schedule.

.2 The GC will be responsible for flow of documentation to the client, Commissioning Manager and PWGSC such as the shop drawings. All submissions shall be vetted and reviewed by the GC. The GC shall be responsible for the quality of the issued material and to coordinate the turnover process with the owner.

.3 The Commissioning Manager will manage the process of developing the testing and performance verification. The Commissioning Manager will prepare PV forms and make them project specific. All forms / check lists / plans will be submitted to the Commissioning Manager and PWGSC Project Manager for review and comment. Update the forms as required. During testing the Commissioning Manager will record all results and report any variances to the PWGSC Project Manager and the Design Consultant.

.4 Develop and implement a site quality assurance program to minimize delays as a result of poor workmanship or sub-contractor error; to reduce deficiencies and call backs during warranty periods; to reduce long-term risk to PWGSC arising from poor workmanship;

.5 Confirm the contractor and sub-contractors’ work is sufficiently complete as per the contract requirements prior to start up so that installation checks are carried out.

.6 Collect project start-up reports, review format and content against manufacturer’s instructions prior to start-up, ensure that forms reflect the procedures listed in the manufacturer’s instructions;

.7 Witness and ensure that all testing and commissioning of equipment is witnessed and inspected by the Commissioning Manager as required and the required authorities.

.8 Ensure seasonal commissioning activities are detailed within the project schedule, are completed on time, and with the proper documentation and or follow-up action;

.9 Direct sub-contractors to complete, repair, adjust or rebuild portions of the work which do not meet the verification standards. Includes monitoring deficiencies and ensure that they are corrected;

.10 Complete and sign-off all verification forms / reports and compile into a comprehensive Commissioning Report as the project progresses. Includes Commissioning Manual updates to contain seasonal commissioning activities;

.11 Undertake all actions required to close-out subcontracts. Includes final warranty reviews and contract close-outs;

.12 Coordinate the training of PWGSC operational staff and the equipment handovers;

.13 Monitor and report to PWGSC on the progress of the commissioning process against the plan;

.14 General Contractor and their sub-contractors are to be available for emergency and troubleshooting service during the first year of occupancy requested by the Client / User for adjustments and

modifications outside the responsibility of the O&M personnel.

1.6 COMMISSIONING PARTICIPANTS

.1 General Contractor to engage the following commissioning participants to verify installation, start up and performance of equipment and systems:

.1 Contractor / subcontractor:

.1 Maintain and update current product information (PI) forms

.2 Participate and execute in all aspects of component, equipment and system installation and complete installation check list

.3 Provide equipment and system technical support

.4 Perform equipment and system re-work and repair

.5 Operate equipment and systems during performance verification (PV) and integrated building system (IBS) testing

.6 Provide equipment and system training, demonstration, and support documentation

.2 Original Equipment Manufacturer (OEM):

.1 Provide equipment and system Factory Tests as applicable

.2 Install equipment specified to be installed by OEM

.3 Perform OEM equipment start-up

.4 Provide equipment installation and start-up reports

.5 Provide operational recommendations

.6 Operate and provide support during performance verification (PV) and integrated building system (IBS) testing

.7 Provide equipment and system training and OEM support documentation when required

.8 Provide warranty support

.3 Specialist subcontractor:

.1 Provide specialized installation and start-up support for equipment and systems not manufactured by the vendor / equipment / system supplier

.2 Provide equipment installation and start-up reports

.3 Provide operation recommendations

.4 Operate and provide support during performance verification (PV) and integrated building system (IBS) testing

.5 Provide equipment and system training and OEM support documentation when required

.4 Specialist Commissioning Agency:

.1 Provide specialized commissioning qualifications essential to the commissioning program but are outside scope of this contract.

.5 Client:

.1 Responsible for commissioning of intrusion and access security systems.

.2 General Contractor to ensure that all commissioning participants:

.1 Will complete work within scheduled time frame.

.2 Be available for emergency and troubleshooting service during first year of occupancy by user for adjustments and modifications outside responsibility of O & M personnel, including:

.1 Modify ventilation rates to meet changes in off-gassing.

.2 Changes to heating or cooling loads beyond scope of BAS.

.3 Changes to BAS control strategies beyond level of training provided to O & M personnel.

.4 Redistribution of electrical services.

.5 Modifications of fire alarm systems.

.6 Modifications to voice communications systems.

.3 Provide names of commissioning participants to Commissioning Manager for review and approval.

.4 Provide details of instruments and calibration certificates for review and approval as requested.

1.7 EXTENT OF COMMISSIONING

.1 GC to manage commissioning of mechanical systems and associated equipment:

.1 Per Division 21 Fire Suppression

.2 Per Division 22 Plumbing

.3 Per Division 23 Heating Ventilation and Air Conditioning

.4 Per Division 25 Integrated Automation

.2 GC to manage the commissioning of electrical systems and equipment:

.1 Division 26 Electrical

.2 Division 27 Communication

.3 Division 28 Fire Detection & Alarm

1.8 DELIVERABLES RELATING TO OPERATION AND MAINTENANCE MANUAL

.1 Operation and Maintenance Manual general requirements:

.1 Refer to Specification Section 01 33 00 Submittal Procedures, 01 78 00 Closeout Procedures, and specific mechanical and electrical systems specifications

1.9 DELIVERABLES RELATING TO THE COMMISSIONING PROCESS

.1 Deliverables to be provided:

.1 Commissioning Specifications.

.2 Start up, pre-commissioning activities and documentation for

systems, and equipment.

.3 Completed installation check lists (ICL).

.4 Completed product information (PI) report forms.

.5 Completed performance verification (PV) report forms.

.6 Results of Performance Verification Tests and Inspections.

.7 Description of commissioning procedures including activities and documentation.

.8 Description of commissioning of integrated systems and documentation.

.9 Tests witnessed by PWGSC / Owner Team.

.10 Tests performed by the Contractor.

.11 Training Plans.

.12 Commissioning Reports.

.13 Prescribed activities during warranty period.

1.10 COMMISSIONING ACTIVITIES AND REALTED DOCUMENTATION

.1 Items listed in this Commissioning Plan include the following:

.1 Installation and pre-start up inspections by the General Contractor.

.2 Contractor to use approved installation check lists reviewed by the Commissioning Manager.

.3 General Contractor to notify the Commissioning Manager of installation / start-up inspections. Commissioning Manager will witness pre-start up inspections on a sampling basis as they see fit.

.4 Include completed installation / start-up documentation with Commissioning Report.

.5 Conduct pre-start-up tests: conduct pressure, static, flushing, cleaning, and "bumping" during construction as specified in technical sections. To be witnessed and verified by General

Contractor. All results are to be documented and recorded.

.6 Commissioning Manager will monitor a sample of these inspections and tests.

.7 Include completed documentation in Commissioning Report.

.8 Commissioning activity matrixes outlining responsibilities will be provided and updated during the commissioning process.

.2 Commissioning activities - MECHANICAL:

.1 Plumbing and Miscellaneous Mechanical systems:

.1 "Bump" each item of equipment in its "stand-alone" mode.

.2 Complete pre-start-up checks and complete relevant documentation.

.3 After equipment has been started, test related systems in conjunction with control systems on a system-by-system basis.

.2 HVAC equipment and systems:

.1 "Bump" each item of equipment in its "stand-alone" mode.

.2 At this time, complete pre-start-up checks and complete relevant documentation.

.3 After equipment has been started, test related systems in conjunction with control systems on a system-by-system basis.

.4 Perform TAB on systems. TAB reports to be approved by Design Engineer.

.3 BAS:

.1 BAS trending to be available as supporting documentation for performance verification.

.2 Perform point-by-point testing in parallel with start-up.

.3 Carry out point-by-point verification.

.4 Provide written documentation indicating commissioned BAS points on an ongoing basis or upon request.

.5 Demonstrate performance of systems, to be witnessed by Commissioning Manager and Owner Representative

.6 Perform final commissioning and operational tests

.3 Commissioning activities - ELECTRICAL SYSTEMS

.1 Include equipment and systems identified above.

.2 Reports of test results to be witnessed and certified by the Commissioning Manager before verification.

.3 Lighting systems:

.1 New lighting equipment and systems only

.4 Emergency lighting systems:

.1 Tests to include verification of lighting levels and coverage, initially by disrupting normal power.

.5 Fire alarm systems:

.1 Verification by installation contractor as per fire alarm specifications.

1.11 START-UP

.1 Start-up components, equipment and systems.

.2 Equipment manufacturer, supplier, installing specialist, sub-contractor will start-up all pieces of equipment and systems under Contractor's direction.

.3 Commissioning Manager to witness selected start-up activities. Provide advance notice of equipment system start-up to the Commissioning Manager.

.1 Contractor to rectify start-up deficiencies to satisfaction of Commissioning Manager.

.4 Performance Verification (PV):

.1 General Contractor to perform.

.1 Repeat when necessary until results are acceptable to

Commissioning Manager.

.2 Use approved PV forms.

.3 Commissioning Manager to witness as required and certify reported results using approved PV forms.

.4 Commissioning Manager to approve completed PV reports

.5 Commissioning Manager reserves right to verify up to one hundred percent (100%) of reported results at random.

.6 Failure of randomly selected item shall result in rejection of PV report or report of system start-up and testing.

.7 Contractor to rectify PV deficiencies to the satisfaction of the Commissioning Manager.

.5 Contractor to perform commissioning activities specified and developed by the Commissioning Manager.

.6 Contractor’s commissioning activities shall be monitored by the Commissioning Manager.

.7 General Contractor will prepare system and equipment PV reports. The Commissioning Manager will monitor preparation of system and equipment PV reports.

.8 General Contractor to submit system and equipment PV reports for review and comment.

.9 Contractor shall repeat the PV test in order to verify a percentage of the reported results at the request of the Commissioning Manager with no additional cost added to the contract.

1.12 COMMISSIONING OF INTEGRATED SYSTEMS AND RELATED DOCUMENTATION

.1 Contractor to carry costs to provide all required resources such as but not limited to; labour, tools, equipment and instrumentation, to be execute IBS tests as per the Commissioning Plan finalized during the construction phase.

1.13 INSTALLATION CHECK LISTS (ICL)

.1 Refer to Section 01 91 33 - Commissioning

Forms:

1.14 PRODUCT INFORMATION (PI) REPORT FORMS

.1 Refer to Section 01 91 33 - Commissioning Forms:

1.15 PERFORMANCE VERTIFICATION (PV) REPORT

.1 Refer to Section 01 91 33 - Commissioning Forms:

1.16 DELIVERABLES RELATING TO ADMINISTRATION OF COMMISSIONING

.1 General:

.1 Because of risk assessment, contractor shall complete commissioning of occupancy, weather and seasonal-sensitive equipment and systems in all areas before building is occupied.

1.17 COMMISSION-ING SCHEDULES

.1 Prepare detailed critical path Commissioning Schedule and submit to Commissioning Manager, for review at the same time as Project Construction Schedule. Include:

.1 Milestones, testing, documentation, training and commissioning activities of components, equipment, subsystems, systems and integrated systems, including:

.1 Pre-TAB review

.2 Notification of intention to start TAB: five (5) days before start of TAB.

.3 TAB: after successful start-up, correction of deficiencies and verification of normal and safe operation.

.4 Identification of deferred / seasonal commissioning.

.5 Implementation of training plans.

.2 After approval, incorporate Commissioning Schedule into Construction Schedule.

.3 All parties will address scheduling problems and make necessary notifications in a timely manner in order to expedite the commissioning process.

.4 Commissioning Manager, General Contractor and General Contractor’s Commissioning Agent will monitor progress of commissioning against

this schedule.

.5 Construction & Contractor Team to provide a summary four (4) week "look ahead" schedule of all commissioning activities requiring review or witness by outside parties, including additional milestone details such as date, time and location.

.6 Construction & Contractor Team to provide schedule updates on a regular basis but not less than every two (2) weeks during the last fifty percent (50%) of construction for each individual phases.

1.18 COMMISSIONING REPORTS

.1 Submit reports of tests, witnessed and certified by General Contractor to Commissioning Manager who will verify reported results.

.2 Include completed and certified PI and PV reports in properly formatted Commissioning Reports.

.3 Before reports are accepted, reported results may be subject to verification by the Commissioning Manager.

1.19 ACTIVITIES DURING WARRANTY PERIOD

.1 Commissioning activities must be completed before issuance of Interim Certificate, it is anticipated that certain commissioning activities may be necessary during Warranty Period, including:

.1 Fine tuning of HVAC systems (document all adjustments and changes).

.2 Adjustment of ventilation rates to maintain lab space pressure differential and cascade systems.

.3 Seasonal Testing as required based on ambient conditions

1.20 TESTS TO BE PERFORMED BY OWNER / USER GROUP

.1 Systems and integration of Owner supplied equipment and systems integrated into base building systems.

1.21 TRAINING PLANS

.1 Refer to Section 01 91 41 - Commissioning - Training.

1.22 FINAL SETTINGS

.1 Upon completion of commissioning to satisfaction of Commissioning Manager, lock control devices in their final positions, indelibly mark settings marked and include in

Commissioning Reports.

1.23 PAYMENTS FOR COMMISSIONING (COMMISSIONING DRAW)

.1 See Section 01 91 13 General Commissioning (Cx) Requirements.

Part 2 PRODUCTS

2.1 NOT USED

.1 NOT USED

Part 3 EXECUTION

3.1 NOT USED

.1 NOT USED

END OF SECTION

Part 1 GENERAL

1.1 SUMMARY

.1 Section Includes:

.1 Commissioning forms to be completed for equipment, systems and integrated systems.

.2 Sample project PI and PV forms are in Appendix A

.2 Related Sections:

.1 Section 01 91 13 General Commissioning (Cx) Requirements

.2 Section 01 91 31 Commissioning (Cx) Plan

.3 Section 01 91 41 Commissioning: Training

.4 Section *23* 05 03 Mechanical Commissioning Specifications

.5 Division 21 / 22 / 23 / 25 Specifications

.6 Section 26 05 05 Electrical Commissioning Specifications

.7 Division 26 / 27 /28 Specifications

1.2 PRODUCT INFORMATION (PI) REPORT FORMS

.1 Product Information (PI) forms compile gathered data on new components, equipment and systems. PI information includes design and nameplate information. PI forms are not used for existing components, equipment and systems. This documentation is to be included in the BMM at the completion of work.

.2 PI form template(s) will be provided by the Commissioning Manager. The General Contractor and their sub-contractors are responsible for updating and completing the PI forms after award of contract to meet PWGSC requirements

.3 The Building Operator Commissioning Representative will provide all required MMS tag numbers for new component, equipment and systems.

.4 The Contractor will enter and include all MMS tag numbering on PI Forms and all commissioning documentation.

1.3 INSTALLATION / START-UP CHECK LISTS (ICL)

.1 Installation Check Lists (ICL) are provided by the General Contractor and their sub-contractors for all installed equipment

.2 ICL shall include but not limited to the following data / information:

.1 Product manufacturer's installation instructions and recommended checks.

.2 Special procedures as specified in relevant technical sections.

.3 Items considered good installation and engineering industry practices deemed appropriate for proper and efficient operation.

.3 Equipment manufacturer's installation / start-up check lists are acceptable for use. OEM check sheets are to be submitted to the Commissioning Manager before execution. Supplemental / additional data lists may be required for specific project conditions as deemed necessary by the Commissioning Manager.

.4 Use ICL to verify new equipment installations. Document completed checks; indicate deficiencies and corrective action taken.

.5 Installer to sign installation check lists upon completion, certifying stated checks and inspections have been performed. Submit completed check lists to Commissioning Manager for review. Check lists will be required during commissioning and will be included in the O & M Manual at completion of the project.

.6 Completing the check lists is an important part of the commissioning process and will be stringently used for equipment pre-start and start-up procedures.

1.4 PERFORMANCE VERIFICATION (PV) FORMS

.1 Commissioning Manager shall develop PV report forms to include measured data and readings taken during functional performance testing and PV procedures.

.2 Create PV form(s) to verify the following:

.1 Design criteria, design intent, testing adjusting and balancing (TAB), operation and functional

performance of components, equipment, sub-systems, systems and integrated systems.

.2 Operational checks in specified normal and emergency modes and under specified load conditions.

.3 Running dynamic tests and adjustments to ensure correct operation, efficiency and independent functionality and interactively with other systems as intended with the project requirements.

.4 Redundancy and standby factors.

.5 Documenting CL2 performance requirements

.3 PV form(s) content should include but are not limited to the following:

.1 Record analytical and substantiating data.

.2 Additional data not previously specified but required by the Commissioning Manager or PWGSC for further sub-system, system and integrated system tests.

.4 PV forms are structured to permit repeating test process and re-commissioning.

.5 Prior to executing performance verification and functional performance testing of integrated building systems, all PV forms of related and supporting systems shall be completed with deficiencies and issued resolved.

1.5 COMMISSIONING FORMS

.1 Commissioning Manager will provide:

.1 Draft PI Form Template(s).

.2 Draft PV Form Template(s)

.2 General Contractor will provide:

.1 Installation Check Sheets

.2 OEM Start Up Forms

.3 General Contractor shall update PI form(s) to accommodate all design and construction changes. The General Contractor and their sub-contractors shall be responsible to update the PI forms to meet additional PWGSC requirements. This includes and is not

limited to:

.1 Modify existing PI form content.

.2 Create additional PI form(s) for components, equipment and systems.

.3 Produce final PI form(s) deliverables reviewed by the PWGSC and accepted by the Commissioning Manager.

.4 If PI form item is deemed “Not applicable” indicate “n / a” on PI forms.

.5 Contractor shall update PI form(s) during construction. PI form(s) are to be current with the construction process. PI forms will be reviewed regularly by the Commissioning Manager.

.6 General Contractor develops equipment / system installation check lists (ICL) with the assistance of the Contractor.

.7 Draft ICL shall be submitted to the Commissioning Manager for review and comment.

.8 General Contractor shall review draft PV forms and provide written comments and recommendation should construction or project phasing not allow testing as described to the Commissioning Manager.

.9 General Contractor shall execute all PV forms in advance in preparation for final demonstration and review by Commissioning Manager to update PV form(s) as per Commissioning Manager comments prior to PV testing.

.10 Prior to PV testing Contractor to complete “Shop Drawing” column and “Actual” / “As measured” portion of the PI forms (if “Not Applicable” indicate N/A).

.11 Contractor to execute PV testing. Reported results in true measured SI unit values.

.12 PV form to bear signatures of recording / executing technician and/or General Contractor.

.13 Submit original PV forms following testing for review by Commissioning Manager.

.14 Maintain copy of all commissioning forms on site during construction and commissioning period.

.15 Forms to be included in both hard copy and electronic format with typed / written results in commissioning documentation submissions.

1.6 CHANGES AND DEVELOPMENT OF NEW REPORT FORMS

.1 Contractor shall develop additional forms as required or requested by PWGSC and submit to Commissioning Manager for approval prior to use.

.1 Additional commissioning forms to be in same format as existing commissioning forms.

Part 2 PRODUCTS

2.1 NOT USED

.1 NOT USED

Part 3 EXECUTION

3.1 NOT USED

.1 NOT USED

END OF SECTION

Appendix A

Sample Product Information (PI) Forms

2301 Midland Ave – Product Information (PI) Form
Air Conditioning Unit

MMS #:			Tag:	
Description:	Supplementary AC Unit			
Location:	Floor:	3rd	Room:	

Power	Emergency

Fed From	

	Actual		
Manufacturer Name:			
Model #:			
Serial # / Part #:			
	Design	Shop	Actual
Cooling Medium			
Air Flow (l/s)			
Tons / BTU			
Voltage (V)			
Phase			
Control Interface			

Notes:

Mechanical Contractor		PWSGC Cx Manager	
Departmental Representative		Cx Manager	

2301 Midland Ave. – Product Information (PI) Form

ATS

MMS No:			Equipment Name/Tag:	
Equipment Type:				
Location:	Level:		Room No:	
Room Name:				
Systems Served:				

Manufacturer:			
Model:			
Serial No:			
	Design	Shop	Actual
Voltage (V):			
No. Phases:			
No. Wires:			
Switch Rating (A):			
Short Circuit Rating (kA):			
Arc Flash Hazard (cal/cm^2):			
Start-Up Time Delay (sec):			
Cool Down Time Delay (minutes):			
Mounting Type:			
Enclosure Type:			
Enclosure Colour:			
Neutral Transfer (Y/N):			
Fire Alarm System Connection Provided (Y/N):			
BAS Connection Provided (Y/N):			

Notes;

Cx Agent _____ PWSCC Cx Manager _____

Departmental Representative _____ Project Manager _____

2301 Midland Ave – Product Information (PI) Form
Lab Differential Pressure Monitor

MMS #:			Tag:	
Description:	Lab Differential Pressure Monitor			
Location:	Floor:	3rd	Room:	

Power	Emergency

Fed From	

	Actual		
Manufacturer Name:			
Model #:			
Serial # / Part #:			
	Design	Shop	Actual
Pressure Range (Pa)			
Supply voltage			
Low level alarm			
High level alarm			
Control Interface			
Filtration Req'ts			

Notes:

Mechanical Contractor		PWSGC Cx Manager	
Departmental Representative		Cx Manager	

2301 Midland Ave. – Product Information (PI) Form

Panelboard

MMS No:		Equipment Name/Tag:	

Equipment Type:				
Location:	Level:		Room No:	
Room Name:				
System Served:				

Manufacturer:			
Model:			
Serial No:			
	Design	Shop	Actual
Voltage (V):			
No. Phases:			
No. Wires:			
Mains (A):			
Short Circuit Rating (kA):			
Arc Flash Hazard (cal/cm^2):			
Tub Size:			
Capacity (No. Circuits):			
Mounting Type:			
Enclosure Type:			
Enclosure Colour:			
Main Breaker Provided (Y/N):			
Isolated Ground Bus Provided (Y/N):			
Surge Protection Device Provided (Y/N):			
Digital Metering Provided (Y/N):			

Notes;

Electrical Contractor _____ PWSCC Cx Manager _____

Departmental Representative _____ Cx Manager _____

2301 Midland Ave – Product Information (PI) Form
Sink & Faucet

MMS #:			Tag:	
Description:	Sink & Faucet			
Location:	Floor:	3rd	Room:	

Power	Emergency

Fed From	

	Actual		
Manufacturer Name:			
Model #:			
Serial # / Part #:			
	Design	Shop	Actual
Flow Rate			
Hot / Cold H_2O			
Tempered H_2O			
Voltage (V)			
Inlet pipe size			
Control			

Notes:

Mechanical Contractor		PWSGC Cx Manager	
Departmental Representative		Cx Manager	

2301 Midland Ave. – Product Information (PI) Form

Splitter

MMS No:		Equipment Name/Tag:	

Equipment Type:				
Location:	Level:		Room No:	
Fed From:				
System Served:				

Manufacturer:			
Model:			
Serial No:			
	Design	Shop	Actual
Voltage (V):			
No. Phases:			
No. Wires:			
Mains (A):			
Short Circuit Rating (kA):			
Arc Flash Hazard (cal/cm^2):			
Mounting Type:			
Enclosure Type:			
Enclosure Colour:			
Main Breaker Provided (Y/N):			
Isolated Ground Bus Provided (Y/N):			
Surge Protection Device Provided (Y/N):			

Notes;

Electrical Contractor _____ PWSCC Cx Manager _____

Departmental Representative _____ Cx Manager _____

2301 Midland Ave. - Product Information (PI) Form

Transformer

MMS No:			Equipment Name/Tag:	
Equipment Type:				
Location:	Level:	3rd Floor	Room No:	
Fed From				
System Served:				

Manufacturer:			
Model:			
Serial No:			
	Design	Shop	Actual
Primary Voltage (V):			
Primary Delta/Wye:			
Primary No. Phases:			
Primary No. Wires:			
Secondary Voltage (V):			
Secondary Delta/Wye:			
Secondary No. Phases:			
Secondary No. Wires:			
Impedance (%):			
K-Rating:			
Insulation Class (°C):			
Temperature Rise (°C):			
Taps:			
Harmonic Mitigating:			
Arc Flash Hazard (cal/cm^2):			
Mounting Type:			
Enclosure Type:			
Enclosure Colour:			

Notes;

Electrical Contractor _____ PWSCC Cx Manager _____

Departmental Representative _____ Cx Manager _____

2301 Midland Ave – Product Information (PI) Form
VAV Air Terminal Unit

MMS #:			Tag:	
Description:	Supply / Exhaust Lab Air Terminal Unit			
Location:	Floor:	3rd	Room:	

Power	Emergency

Fed From	

	Actual		
Manufacturer Name:			
Model #:			
Serial # / Part #:			
	Design	Shop	Actual
Type / Size			
Max Air Flow (l/s)			
Min Air Flow (l/s)			
Voltage (V)			
Phase			
Reheat Coil			
Inlet Size			
Outlet Size			
Control Interface			

Notes:

Mechanical Contractor		PWSGC Cx Manager	
Departmental Representative		Cx Manager	

Appendix B

Appendix B contains sample Performance Verification (PV) Forms

Space IAQ and Air Volume control
Space DP Monitoring
TAB Verification

Sink / Faucet Performance

Transformer Performance
Power Panel Performance

Part 1 GENERAL

1.1 SUMMARY

.1 Section Includes:

.1 This section specifies roles and responsibilities of Commissioning Training.

.2 Related Sections:

.1 Sections 01 91 13 General Commissioning (Cx) Requirements

.2 Sections 01 91 31 Commissioning (Cx) Plan

.3 Section 01 91 33 Commissioning Forms

.4 Section 23 05 03 Mechanical Commissioning Specifications

.5 Division 21 / 22 / 23 / 25 Specifications

.6 Section 26 05 05 Electrical Commissioning Specifications

.7 Division 26 / 27 /28 Specifications

1.2 TRAINING PLAN DEVELOPMENT AND ACCEPTANCE

.1 Construction Team will be provided with a Draft Training Plan by the Commissioning Manager for further development and execution by the General Contractor.

.2 The General Contractor will continue development of the Training Plan and issue updated revisions as required.

.3 The Training Plan will be developed in two (2) phases:

.1 Draft Phase is used for the internal construction team and their development

.2 Revision Phase is used once the Training Plan has been issued to the Commissioning Manager and PWGSC

.4 Training Plan revision process will be as follows:

.1 Drafts are for internal commissioning team review and tracking.

.2 Revisions are for external control once the training plan is issued

to the entire project team.

.3 Contractor shall issue Revision 0 for Commissioning Manager review at start of construction.

.4 Training shall consist of two elements; component / equipment training and system training. For example, training will be provided for each VAV controlled terminal unit and components and training will be provided for each BMS controlled space system (i.e. BMS system).

.5 Training shall meet the project specifications and contract documents

1.3 TRAINEES

.1 Trainees are personnel selected for operating and maintaining the equipment and systems which operate to maintain this facility. Include Property Manager, building operators, maintenance staff, security staff, and technical specialists and facility occupants as determined by the PWGSC.

.2 Trainees will be available for training and knowledge transfer during all stages and phases of construction for purposes of familiarization with facility equipment and systems including all aspects of normal and emergency operation.

.3 Trainees are to be encouraged and allowed to attend performance verification and integrated building testing.

1.4 INSTRUCTORS

.1 Design Engineer will provide:

.1 Overview descriptions of equipment and systems.

.2 Instruction on design philosophy, design criteria, and design intent.

.2 Contractor and certified factory-trained manufacturer / OEM personnel to provide instruction on the following:

.1 Facility walk-thru to identify all assets, components, equipment and systems awareness.

.2 Start-up, operation, shut-down of equipment, components and systems.

.3 Control features, reasons for,

results of, implications on associated systems of, adjustment of set points of control and safety devices.

.4 Instructions on servicing, preventative maintenance and adjustment of systems, equipment and components.

.5 Equipment and system troubleshooting techniques and procedures.

.6 Process and stages to maintain operation and fine tune equipment system to maintain energy efficiency and high performance.

.7 Identifying operation trends.

.8 Systems operation including how all components operate to provide design performance.

.9 Instructions on equipment and component integration and coordination to develop system performance and interaction.

.10 Instructions on equipment and component repairs and replacement.

.11 Recommend preventative maintenance (PM) parts and suppliers, spare parts and other durable goods.

.12 Servicing and troubleshooting procedures, processes such as information to collect, quick fixes to try and who to call.

1.5 TRAINING OBJECTIVES

.1 Training to be detailed of sufficient content and duration to ensure the following are clearly explained:

.1 Safe, reliable, cost-effective, energy-efficient operation of equipment and systems in normal and emergency modes under all conditions.

.2 Effective on-going inspection and measurements of system performance.

.3 Proper preventive maintenance, diagnosis and trouble-shooting.

.4 Ability to update facility documentation.

.5 Ability to operate equipment and

systems under emergency conditions until appropriate qualified assistance arrives.

.6 Ability to effectively respond to emergencies / failures while maintaining facility operation

.7 Incorporate all construction phasing requirements

1.6 TRAINING MATERIALS

.1 Deliver draft training format such as;

.1 Equipment list

.2 System lists

.3 Table of contents

.4 Program / agenda

.5 Duration

.2 Submit draft training plan for each piece / set of equipment of all systems for review and comment by the Commissioning Manager.

.3 Update draft training plan format and content as per Commissioning Manager comments.

.4 Deliver draft training resource material for all equipment / assets / systems.

.5 Submit draft training resources to the Commissioning Manager for review and comment.

.6 Update draft training resource material as per Commissioning Manager comments.

.7 Instructors shall be responsible for training material content and quality.

.8 Training materials to include:

.1 "As-Built" Contract Documents (includes updated Shop Drawings).

.2 Installation Manual

.3 Operating and Maintenance Manual.

.4 PI Reports / Forms

.5 Installation Check Lists (ICL)

.6 PV Reports / Forms

.7 TAB Reports / Forms

.8 Other reports and documents as required.

.9 Training material (format) and general content will be reviewed by Commissioning Manager prior to start of training

.10 Training material to be provided for review and approval two (2) weeks prior to

commencement of scheduled training.

.11 Training material formats shall be both soft and hard.

.12 Training materials to be in a format that permits future training to be executed to the same degree of detail.

.13 Commissioning Manager will review and comment on the training material and manuals.

.14 General Contractor will provide the number of copies of training material as requested by PWGSC

.15 General Contractor will provide material five (5) business days in advance of training for trainee review

.16 PWGSC Project Manager and Building Operator Commissioning Representative review training material and manuals.

.17 Supplement training materials may include:

.1 Current electronic media formats.

.2 Multimedia presentations.

.3 Manufacturer's training videos.

.4 Equipment models.

.18 Manufacturer’s material and approved sample.

1.7 SCHEDULING

.1 Include in Commissioning Schedule sufficient time for training, instruction and demonstration.

.2 Training will be delivered in phases as per construction completion. Operation & Maintenance procedures for identical equipment will only be repeated upon written request of PWGSC
(i.e. individual VAV air terminal device)

.3 Include a detailed training schedule indicating all individual training activities and required trades and specializations.

.4 Deliver training during regular working hours, training sessions to be a maximum of three (3) hours in length or as per applicable equipment specification.

.5 Training to be completed prior to acceptance of facility.

.6 Training to be divided into hands-on,

classroom, oral, written and audio / visual sessions as required.

.7 Schedules to indicate topic and duration

1.8 RESPONSBILITIES

.1 General Contractor is responsible for:

.1 Coordination and scheduling all training activities.

.2 Implementation of training demonstration activities,

.3 Coordination among instructors,

.4 Quality of training and training materials.

.5 Ensuring all equipment and systems are covered

.2 Upon completion of training, provide written report, signed by Instructors and attendees.

.3 Training reports to include

.1 Content Topics

.2 Instructor

.3 Attendees

.4 List of training / reference material

.5 Appropriate signatures

1.9 TRAINING CONTENT

.1 Training to include demonstrations by Instructors using the installed equipment and systems.

.2 Content includes:

.1 Review of facility and occupancy profile.

.2 Functional requirements.

.3 System philosophy, limitations of systems and emergency procedures.

.4 Review of system layout, equipment, components and controls.

.5 Equipment and system start-up, operation, monitoring, servicing, preventative maintenance and shut-down procedures.

.6 System operating sequences, including step-by-step directions for starting up, shut-down, operation of valves, dampers, switches, adjustment of control settings and emergency procedures.

.7 Inter-action among systems and equipment during integrated operation.

.8 Maintenance and servicing.

.9 Trouble-shooting diagnosis.

.10 Review of O & M documentation.

.11 Day to day operation and logging

.12 Reliability operation, standard operating procedure (SOP) during failure and duress modes.

.3 Provide specialized training as specified in relevant Technical Sections of the construction specifications.

1.10 AUDIO / VIDEO RECORDING OF TRAINING

.1 Audio and video tapping of the training will be completed by the General Contractor upon the written request of PWGSC or as per the mechanical and electrical specifications.

.2 All equipment and system training audio / video recorded by the General Contractor or Contractor and shall be saved on DVD and other digital media as specified by Commissioning Manager

.3 Manufacturer’s e-media / material content may be used as a training tool / resource with the Commissioning Manager’s approval. Sales / marketing material will be rejected.

.4 . All training videos will satisfy the following:

.1 Media to be DVD or media / technology as per Commissioning Manager.

.2 Production methods to be professional and high definition quality.

~~.3~~ Organiz*ed* by MMS Code and system or as per Commissioning Manager’s instructions.

.4 General Contractor to provide training session Audio / Video Table of Contents prior to the start of training for review by the Commissioning Manager.

Part 2 PRODUCTS

2.1 NOT USED .1 NOT USED

Part 3 EXECUTION

3.1 NOT USED .1 NOT USED

END OF SECTION

PART 1 - GENERAL

1.1 REFERENCES

.1 Canadian Standards Association (CSA International).
.1 CSA S350-M1980(R2003), Code of Practice for Safety in Demolition of Structures.

.2 Department of Justice Canada (Jus).
.1 Canadian Environmental Assessment Act (CEAA), 1995, c. 37.
.2 Canadian Environmental Protection Act, 1999 (CEPA), c. 33.

.3 Health Canada/Workplace Hazardous Materials Information System (WHMIS).
.1 Material Safety Data Sheets (MSDS).

.4 Transport Canada (TC).
.1 Transportation of Dangerous Goods Act, 1992 (TDGA), c. 34.

1.2 DEFINITIONS

.1 Demolition: rapid destruction of building following removal of hazardous materials.

.2 Hazardous Materials: dangerous substances, dangerous goods, hazardous commodities and hazardous products, may include but not limited to: asbestos PCB's, CFC's, HCFC's poisons, corrosive agents, flammable substances, ammunition, explosives, radioactive substances, or other material that can endanger human health or well being or environment if handled improperly.

.3 Waste Audit (WA): detailed inventory of materials in building. Indicates quantities of reuse, recycling and landfill.
.1 Involves quantifying by volume/weight amounts of materials and wastes generated during construction, demolition, deconstruction, or renovation project.
.2 Indicates quantities of reuse, recycling and landfill.

.4 Waste Management Coordinator (WMC): contractor representative responsible for supervising waste management activities as well as coordinating related, required submittal and reporting requirements.

1.2 DEFINITIONS (Cont'd)

.5 Waste Reduction Workplan (WRW): written report which addresses opportunities for reduction, reuse, or recycling of materials. WRW is based on information acquired from WA.

1.3 SUBMITTALS

.1 Submittals in accordance with Section 01 33 00.

.2 Product Data: submit WHMIS MSDS - Material Safety Data Sheets.

.3 Shop drawings.
.1 Submit for approval drawings, diagrams or details showing sequence of demolition work and supporting structures, where required by authorities having jurisdiction.
.2 Submit drawings stamped and signed by qualified Professional Engineer registered or licensed in Province of Ontario, Canada.

.4 Hazardous Materials: provide description of Hazardous Materials and Notification of Filing with proper authorities prior to beginning of Work as required.

.5 Waste Reduction Workplan: prior to beginning of Work on site submit detailed Waste Reduction Workplan in accordance with Section 01 74 20 and indicate:
.1 Descriptions of and anticipated quantities in percentages of materials to be salvaged reused, recycled and landfilled.
.2 Schedule of selective demolition.
.3 Number and location of dumpsters.
.4 Anticipated frequency of tippage.
.5 Name and address of waste facilities.

.6 Certificates: submit copies of bills of lading from authorized disposal sites and reuse and recycling facilities for material removed from site upon request of Departmental Representative.
.1 Written authorization from Departmental Representative is required to deviate from approved facilities

1.4 QUALITY ASSURANCE

.1 Regulatory Requirements: ensure Work is performed in compliance with CEPA, CEAA, TDGA, and applicable Provincial/Territorial regulations.

.2 Health and Safety.
.1 Do construction occupational health and safety in accordance with Section 01 35 29.

1.5 DELIVERY, STORAGE AND HANDLING

.1 Perform Work in accordance with Section 01 61 00.

.2 Store and manage hazaroud materials in accordance with Section 01 61 00.

.3 Storage and Protection.
.1 Protect in accordance with Section 01 61 00.
.2 Protect existing items designated to remain and items designated for salvage. In event of damage to such items, immediately replace or make repairs to approval of Departmental Representative and at no cost to Departmental Representative.
.3 Remove and store materials to be salvaged, in manner to prevent damage.
.4 Store and protect in accordance with requirements for maximum preservation of material.
.5 Handle salvaged materials as new materials.

.4 Waste Management and Disposal.
.1 Separate waste materials for reuse and recycling in accordance with Section 01 74 20.
.2 Divert excess materials from landfill to site approved by Departmental Representative.
.3 Separate for reuse and recycling and place in designated containers in accordance with Waste Management Plan.
.4 Place materials defined as hazardous or toxic in designated containers.
.5 Handle and dispose of hazardous materials in accordance with CEPA, TDGA, Regional and Municipal regulations.
.6 Label location of salvaged material's storage areas and provide barriers and security devices.
.7 Ensure emptied containers are sealed and stored safely.

1.5 DELIVERY, STORAGE AND HANDLING (Cont'd)

.4 (Cont'd)

.8 Remove materials that cannot be salvaged for reuse or recycling and dispose of in accordance with applicable codes at licensed facilities.

1.6 SITE CONDITIONS

.1 Site Environmental Requirements.

.1 Perform work in accordance with Section 01 35 43.

.2 Ensure that selective demolition work does not adversely affect adjacent watercourses, groundwater and wildlife, or contribute to excess air and noise pollution.

.3 Do not dispose of waste of volatile materials including but not limited to, mineral spirits, oil, petroleum based lubricants, or toxic cleaning solutions into watercourses, storm or sanitary sewers.

.1 Ensure proper disposal procedures are maintained throughout the project.

.4 Do not pump water containing suspended materials into watercourses, storm or sanitary sewers or onto adjacent properties.

.5 Control disposal or runoff of water containing suspended materials or other harmful substances in accordance with local authorities.

.6 Protect trees, plants and foliage on site and adjacent properties where indicated.

.2 Existing Conditions.

.1 Hazardous material removal work to be performed under Division 2 Abatement Sections.

1.7 SCHEDULING

.1 Employ necessary means to meet project time lines without compromising specified minimum rates of material diversion.

.1 Notify Departmental Representative in writing when unforeseen delays occur.

PART 2 - PRODUCTS

2.1 MATERIALS

.1 All materials requiring removal shall become the Contractor's property and shall be removed and disposed of from the site, as the work progresses, unless indicated otherwise.

.2 Salvaged material: Salvage and stockpile original materials as indicated on site or drawings. Salvaged materials shall not be chipped, cracked, split, stained or damaged. Store items off of moist surfaces.

2.2 EQUIPMENT

.1 Leave machinery running only while in use, except where extreme temperatures prohibit shutting machinery down.

.2 Where possible, use water efficient wetting equipment/trucks/attachments when minimizing dust.

.3 Demonstrate that tools are being used in manner which allows for salvage of materials in best condition possible.

PART 3 - EXECUTION

3.1 PREPARATION

.1 Inspect site with Departmental Representative and verify extent and location of items designated for removal, disposal, alternative disposal, recycling, salvage and items to remain.

.2 Locate and protect utilities. Preserve active utilities traversing site in operating condition.

.3 Notify and obtain approval of utility companies before starting demolition.

.4 Disconnect and Cap Designated Mechanical Services.
.1 Natural Gas Supply Lines: remove in accordance with gas company requirements as directed by Departmental Representative.

3.1 PREPARATION (Cont'd)

.4 (Cont'd)
.2 Sewer and Water Lines: remove in accordance with authority having jurisdiction. Contact utility company to arrange for removal as directed by Departmental Representative and securely plug to form watertight seal.

3.2 REMOVAL OF HAZARDOUS WASTES

.1 Removal of hazardous wastes to be performed under Work of Division 2 abatement Sections.

3.3 CONCRETE CUTTING AND CORING

.1 Prior to cutting or coring any concrete slab, suspended or on grade, or any concrete beam, investigate by telemetrically scanning the element for presence of embedded services (piping, cabling, conduit, etc.), and for locations of reinforcing steel in suspended concrete slabs and beams.

.2 Acceptable telemetric scanning systems include:
.1 X-Ray scanning of suspended slabs and for concrete beams.
.2 Ground-penetrating) radar for slab on grade, for suspended slabs and for concrete beams.

.3 Magnetic radio scanners not acceptable for telemetric scanning.

.4 The term x-rays include gamma ray methods, and procedures that use electrically generated x-rays.

.5 Where x-rays employed:
.1 Provide Owner minimum 5 working days advance notice of scanning time in order to provide sufficient advance notice to personnel that may be affected by the x-ray work.
.2 Conform to Owner's radiation protection requirements prior to start of any x-ray work.

.6 Provide Owner and Departmental Representative with inspection agency's written report, summarizing investigations and conclusions.

.7 Obtain Departmental Representative's direction where investigations reveal that cutting or coring required in Contract would cut or damage embedded services, or cut or

3.3 CONCRETE CUTTING AND CORING (Cont'd)

.7 (Cont'd)
damage reinforcing steel in suspended concrete slabs or beams.

.8 Execute cutting and coring to prevent damage to all embedded services. Make good all damage arising from cutting embedded services.

.9 Execute cutting and coring to prevent damage (cutting in whole or in part) reinforcing steel in suspended concrete slabs with Departmental Representative's prior authorization.

.10 Make good all damage arising from cutting reinforcing steel in suspended concrete slabs and beams.

3.4 DEMOLITION, GENERAL

.1 Perform demolition with extreme care. Confine effects of demolition to those parts which are to be demolished.

.2 Perform Work and prevent inconvenience to persons outside those parts which are to be demolished.

.3 Carry out demolition in accordance with the requirements of CSA S350.

3.5 REMOVAL OPERATIONS

.1 Remove items as indicated.

.2 Do not disturb items designated to remain in place.

.3 Where doors are scheduled to be removed, include:
.1 Removal in re-usable condition of doors and door hardware, and store at the Place of the Work.
.2 Removal of door frames.

.4 Remove interior partitions, fittings, fixtures and accessories as indicated on drawings. Partitions and walls shall be removed full height to structure above.

3.5 REMOVAL OPERATIONS (Cont'd)

.5 Remove interior finishes, such as wall, ceiling and floor finishes, where new finishes are indicated on Contract Drawings.
.1 Removal of existing ceilings shall include complete removal including bulkheads and suspension system.
.2 Removal of adhesive applied finishes shall include complete removal to substrate including adhesive. Take adequate care to prevent damage to substrate.
.3 Remove existing floor finishes, include mortar bed, underlayment or other cleavage membranes, underpad, base, floor moulding and transition strips.

.6 Salvage.
.1 Dismantle items containing materials for salvage and stockpile salvaged materials at locations as indicated below or on Contract Drawings.

.7 List and description of items to be removed, stored or reused:
.1 Electrical panels.
.2 Fire hose cabinet.
.3 Casework to be reinstalled under Section 12 35 53.
.4 Lab equipment.
.5 Fume hoods.
.6 Light fixtures.
.7 Acoustic ceiling tiles to be reinstalled under Section 09 51 23.
.8 Resilient flooring to be reinstalled under Section 09 65 00 for any patching work required by noted Section.
.9 Wood light valance.
.10 Carpet tiles; tiles to be steam cleaned as outlined in Section 01 74 11.
.11 Ceramic wall tiles.
.12 Interior windows.
.13 Borosilicate piping.
.14 Lab sinks (stainless steel).
.15 Sprinkler heads.
.16 Speakers.
.17 Supply and air return diffusers.
.18 Spigots.
.19 Access panels.
.20 Card readers.
.21 Doors and door hardware.
.22 Additional items as indicated on the drawings or by the Departmental Representative.

3.5 REMOVAL OPERATIONS (Cont'd)

.8 Disposal of Material.
.1 Dispose of materials not designated for salvage or reuse on site at authorized facilities approved in Waste Reduction Workplan.

3.6 STOCKPILING

.1 Label stockpiles, indicating material type and quantity.

.2 Designate appropriate security resources/measures to prevent vandalism, damage and theft.

.3 Locate stockpiled materials convenient for use in new construction to eliminate double handling wherever possible.

.4 Stockpile materials designated for alternate disposal in location which facilitates removal from site and examination by potential end markets, and which does not impede disassembly, processing, or hauling procedures.

3.7 REMOVAL FROM SITE

.1 Remove stockpiled material as directed by Departmental Representative, when it interferes with operations of project.

.2 Remove stockpiles of like materials by alternate disposal option once collection of materials is complete.

.3 Transport material designated for alternate disposal using approved facilities listed in Waste Reduction Workplan and in accordance with applicable regulations.
.1 Written authorization from Departmental Representative is required to deviate from facilities listed in Waste Reduction Workplan.

.4 Dispose of materials not designated for alternate disposal in accordance with applicable regulations.
.1 Disposal Facilities: approved and listed in Waste Reduction Workplan.
.2 Written authorization from Departmental Representative is required to deviate from disposal facilities listed in Waste Reduction Workplan.

3.8 CLEANING AND RESTORATION

.1 Keep site clean and organized throughout demolition work.

.2 Use cleaning solutions and procedures which are not harmful to health, are not injurious to plants, and do not endanger wildlife, adjacent water courses or ground water.

.3 Upon completion of project, remove debris and leave work site clean.

.4 Upon completion of project, reinstate areas affected by Work to condition which existed prior to beginning of Work.

END

DECONSTRUCTION AND WASTE PRODUCTS WORKPLAN SUMMARY

Project Number R.061999.001 **Section 02 42 93**

General Contractor / Waste Management Coordinator	Contact Person(s)	Tel & Fax Nos. Phone - - Fax - -
Project Site:	Type & Work Location: Deconstruction and Renovation	

Material Division #	Material Category	Quantity	Unit of Measure	Material Receiving Body & Hauler	% of total Weight	Disposal Option - % Breakdown			
						Reuse	Recycle	Landfill	
Division 01 - General Requirements									
	Pallets		each						
	Wood		kg.						
	Cardboard Packaging		cu. m.						
	Plastic Packaging		cu. m.						
	Styrene Packaging		cu. m.						
	PS Polyethylene Sheet		sq. m.						
	FRPS Fiber Reinf. Polyethylene Sheet		sq. m.						
	Metal Banding		kg.						
				Subtotal	%	%	%	%	%
Division 02 - Existing Conditions									
	Selective Site Demolition		tonnes						
	Asbestos Abatement		cu. m.						
				Subtotal	%	%	%	%	%
Division 03 – Concrete									
	Concrete cutting and coring		cu. m.						
				Subtotal	%	%	%	%	%
Division 04 - Masonry									
	Concrete Blocks		each						
				Subtotal	%	%	%	%	%

DECONSTRUCTION AND WASTE PRODUCTS WORKPLAN SUMMARY

Project Number R.061999.001 **Section 02 42 93**

General Contractor / Waste Management Coordinator	Contact Person(s)	Tel & Fax Nos. Phone - - Fax - -
Project Site:	Type & Work Location: Deconstruction and Renovation	

Material Division #	Material Category	Quantity	Unit of Measure	Material Receiving Body & Hauler	% of total Weight	Disposal Option - % Breakdown			
						Reuse	Recycle	Landfill	
Division 05 - Metals									
	Reinforcing steel		tonnes						
	Interior Metal Wall Studs		lin. m.						
	Load bearing Metal Wall Studs		lin. m.						
	Steel Lintels		tonnes						
	Structural Steel		tonnes						
				Subtotal	%	%	%	%	%
Division 06 - Wood, Plastics and Composites									
	Regular Wood Framing		cu. m.						
	Plywood: Pressure Treated-Preservative		sq. m.						
	Plywood: Pressure Treated-Fire Retardant		sq. m.						
	Pressure Treated Wood		cu. m .						
	Plywood: Douglas Fir		sq. m.						
	Plywood: Softwood		sq. m.						
	Hardwood Plywood		sq. m.						
	Millwork items		each						
	Trim		lin. m .						
	Cabinet Hardware-list items		each						
				Subtotal	%	%	%	%	%
Division 07 - Thermal & Moisture Protection									
	Loose Insulation:		cu. m.						

General Contractor / Waste Management Coordinator	Contact Person(s)	Tel & Fax Nos. Phone - - Fax - -
Project Site:	Type & Work Location: Deconstruction and Renovation	

Material Division #	Material Category	Quantity	Unit of Measure	Material Receiving Body & Hauler	% of total Weight	Disposal Option - % Breakdown			
						Reuse	Recycle	Landfill	
	Mineral Fibre								
				Subtotal	%	%	%	%	%
Division 08 - Openings									
	Doors (steel – not salvaged for re-use)		each						
	Doors (wood)		each						
	Float Glass		sq. m.						
	Tempered Glass		sq. m.						
	Door hardware – list each item (not salvaged for re-use)		each						
				Subtotal	%	%	%	%	%
Division 09 - Finishes									
	Tile materials (not salvaged for re-use)		sq. m.						
	Flooring: Carpet tile (not salvaged for re-use)		sq. m.						
	Flooring: Resilient flooring		sq. m.						
	Base: Resilient base		m.						
	Gypsum Board Wall and Ceiling		sq. m.						
	Acoustic Tile (not salvaged for re-use)		sq. m.						

General Contractor / Waste Management Coordinator	Contact Person(s)	Tel & Fax Nos. Phone - - Fax - -
Project Site:	Type & Work Location: Deconstruction and Renovation	

Material Division #	Material Category	Quantity	Unit of Measure	Material Receiving Body & Hauler	% of total Weight	Disposal Option - % Breakdown			
						Reuse	Recycle	Landfill	
	Acoustical Suspension System/T Bar Grid		sq. m.						
	Acoustic Batt Insulation		cu. m.						
				Subtotal	%	%	%	%	%
Division 10 - Specialties									
	Specialty items		each						
				Subtotal	%	%	%	%	%
Division 12 - Furnishings									
	Steel Lab Casework (no salvaged for re-use)		each						
Division 21 - Fire Suppression									
	Fire suppression – list each item		each						
				Subtotal	%	%	%	%	%
Division 22 - Plumbing									
22 07 00 Plumbing Insulation									
	Piping Insulation		lin. m.						
22 10 00 Facility Water Distribution									
	Pipes		lin. m.						

General Contractor / Waste Management Coordinator	Contact Person(s)	Tel & Fax Nos. Phone - - Fax - -
Project Site:	Type & Work Location: Deconstruction and Renovation	

Material Division #	Material Category	Quantity	Unit of Measure	Material Receiving Body & Hauler	% of total Weight	Disposal Option - % Breakdown			
						Reuse	Recycle	Landfill	
	Valves		lin. m.						
22 44 00 Plumbing Fixtures									
	Plumbing fixtures – list each		each						
22 61 00 Compressed Air Systems for Laboratory & Healthcare Facilities									
	Compressed Air Piping		lin. m.						
	Compressed Air Equipment		lin. m.						
	Vacuum Piping		lin. m.						
	Vacuum Equipment		each						
22 63 00 Gas Systems for Laboratory & Healthcare Facilities									
	Piping		lin. m.						
	Storage Tank		each						
22 66 00 Chemical Waste Systems for Laboratory & Healthcare Facilities									
	Piping		lin. m.						
	Tank		each						
22 67 00 Processed Water Systems for Laboratory & Healthcare Facilities									
	Piping – list each item		lin. m.						
	Equipment – list each item		each						
				Subtotal	%	%	%	%	%

General Contractor / Waste Management Coordinator	Contact Person(s)	Tel & Fax Nos. Phone - - Fax - -
Project Site:	Type & Work Location: Deconstruction and Renovation	

Material Division #	Material Category	Quantity	Unit of Measure	Material Receiving Body & Hauler	% of total Weight	Disposal Option - % Breakdown			
						Reuse	Recycle	Landfill	
Division 23 - Heating, Ventilating and Air Conditioning									
	List each item		each						
				Subtotal	%	%	%	%	%
Division 25 - Integrated Automation									
	List each item		Each/lin. m.						
				Subtotal	%	%	%	%	%
Division 26 - Electrical									
	List each item		Each/lin. m.						
				Subtotal	%	%	%	%	%
Division 27 - Communications									
	List each item		Each/lin. m.						
				Subtotal	%	%	%	%	%
Division 28 - Electronic Safety and Security									
	List each item.		Each/lin. m.						
				Subtotal	%	%	%	%	%

PART 1 - GENERAL

1.1 RELATED SECTIONS

.1 Section 07 90 00: Sealing of control joints.

1.2 REFERENCES

.1 American Society for Testing and Materials International, (ASTM):
.1 ASTM A1064/A1064M-13, Standard Specification for Carbon-Steel Wire and Welded Wire Reinforcement, Plain and Deformed, for Concrete.
.2 ASTM F593-13a, Standard Specification for Stainless Steel Bolts, Hex Cap Screws, and Studs.

.2 Canadian Standards Association (CSA)/CSA International:
.1 CSA A23.1-09/A23.2-09(R2014), Concrete materials and methods of concrete construction/Test methods and standard practices for concrete.
.2 CAN/CSA-A165 Series-04(R2014) (CAN/CSA-A165.1 Concrete Masonry Units) (CAN/CSA-A165.2 Concrete Brick Units) (CAN/CSA-A165.3 Prefaced Concrete Masonry Units Units).
.3 CAN/CSA-A179-04(R2014), Mortar and Grout for Unit Masonry.
.4 CAN/CSA-A370-04(R2014, Connectors for Masonry.
.5 CAN/CSA-A371-04(R2014), Masonry Construction for Buildings.
.6 CSA G30.18-09, Carbon Steel Bars for Concrete Reinforcement.
.7 CSA S304-14, Design of Masonry Structures.
.8 CSA W186-M1990(R2012), Welding of Reinforcing Bars in Reinforced Concrete Construction.

1.3 SUBMITTALS

.1 Submit in accordance with Section 01 33 00.

.2 Submit product data sheet for each item. Indicate VOC's mortar, grout, colour additives and admixtures.

1.3 SUBMITTALS (Cont'd)

.3 Submit shop drawings indicating wall sections and details, reinforcing and anchors, special detailing, patterning and locations of control joints.

.4 Submit the following samples:
.1 Submit samples of each type and colour of masonry unit used prior to placing order.
.2 Submit samples of masonry anchors and ties.

1.4 QUALITY ASSURANCE

.1 Provide plain and reinforced masonry in accordance with CSA A370, CSA A371, and CSA S304.

1.5 DELIVERY, STORAGE, AND HANDLING

.1 Deliver, store and handle masonry materials in accordance with Section 01 61 00, supplemented as follows:
.1 Deliver prepackaged, dry-blended mortar mix to project site in labelled plastic-lined bags each bearing name and address of manufacturer, production codes or batch numbers, and colour or formula numbers.
.2 Maintain mortar, grout and packaged materials clean, dry, and protected against dampness, freezing, traffic and contamination by foreign materials.

.2 Packaging Waste Management: remove for reuse and return of pallets and packaging materials in accordance with Section 01 74 20.

PART 2 - PRODUCTS

2.1 MATERIALS

.1 Concrete block to CAN/CSA-A165.1: sizes as indicated on Contract Drawings.
.1 H/15/A/M, hollow, normal weight for partitions.
.2 SF/15/A/M, full solid, normal weight for top course of load bearing walls.
.3 Special shapes: provide bullnosed units for exposed corners. Provide purpose-made shapes for lintels and bond beams. Provide additional special shapes as indicated.

2.1 MATERIALS (Cont'd)

.2 Mortar: to CAN/CSA-A179, Proportion specification. Select type from table below.
.1 Interior:
.1 Type N: loadbearing walls and non-loadbearing partitions.
.2 Fine grout to Table 3.

.3 Grout: 25 Mpa concrete in accordance with CAN/CSA A23.1/A23.2.

.4 Connectors: to CAN/CSA-A370, minimum Level 2 corrosion protection.

.5 Reinforcement: Conforming to CSA A370, CSA A371, and ASTM A1064/A1064M.
.1 Truss-type reinforcement, fabricated from 3.76 mm galvanized steel wire, consisting of 2 side-rods welded to a continuous diagonally shaped cross-rod forming a truss design with alternating welds not exceeding 200 mm O.C. overall. For use at single wythe masonry partitions.

.6 Reinforcing bars: to CSA G30.18, Grade 400, deformed.

.7 SS bolts, nuts and washers: stainless steel to ASTM F593.

.8 Concrete aggregate: to CSA A23.1/A23.2, 10 mm maximum size.

.9 Fibre firestopping: bearing ULC label, mineral fibre material capable of being compressed into space at top of masonry partitions.

PART 3 - EXECUTION

3.1 MIXING AND APPROVAL

.1 In accordance CAN/CSA-A179.

.2 Do not commence masonry work until mortar is tested and approved by Departmental Representative.

.3 Concrete mix shall attain:
.1 25 MPa compressive strength at 28 days.
.2 100 mm slump at time of deposit.

3.2 PROTECTION

.1 Protect in accordance with CAN/CSA-A371, except following requirements supplement Clause 6.7.2:
.1 Maintain temperature of mortar between 5°C and 50°C until used.

3.3 INSTALLATION AND WORKMANSHIP

.1 In accordance with CAN/CSA-A371.

.2 Joints of uniform thickness. Tolerances suggested in CAN/CSA-A371 apply.

.3 Align vertical joints.

.4 Lay maximum 1800 mm height of masonry per day.

.5 Cut masonry with power saw.

.6 Fill space between top of non-bearing partitions, underside of deck and underside of structural members with fibre firestopping compressed as recommended by manufacturer and requirements of ULC tests. Neatly trim on each side of partitions. Obtain lateral support angles from Section 05 50 01 and install at required spacing.

.7 Reinforce masonry walls with reinforcing steel as indicated on Drawings. Vertical reinforcing shall be fully grouted in masonry cores with grout.

.8 Install mineral fibre joint filler between:
.1 Masonry and lintels.

.9 Do masonry reinforcing, tying and connecting in accordance with CAN/CSA-A370 and CAN/CSA-A371. If there is conflict in the requirements of these two standards, the more stringent requirement shall apply.

.10 Lightly wet set masonry surfaces before laying abutting masonry.

.11 Remove surplus mortar and mortar droppings as work progresses.

.12 Lay blocks in running bond except as indicated otherwise.

3.3 INSTALLATION AND WORKMANSHIP (Cont'd)

.13 Concave joints, strike flush behind resilient base to height of base or where shown on Contract Drawings.

.14 Build in items supplied by other sections.

.15 Fill built-in interior hollow metal frames with mortar.

.16 Control joints:
.1 Provide continuous vertical control joints in block partitions in following locations:
.1 Where new partitions abutt existing partitions.
.2 In new partitions in indicated locations and not spaced farther than 7.5 m o.c.
.3 On each side of column.
.2 Stop masonry reinforcement each side of control joint. Keep joint free of mortar.

.17 Reinforced lintels:
.1 Install reinforced block lintels at openings.
.2 Provide minimum bearing of 200 mm at each side of opening.
.3 Install reinforcing bars and fill with concrete.
.4 Set block lintels in place using specified mortar.

.18 Place reinforcing bars in cavities.

3.4 CLEANING

.1 Upon completion of installation, remove surplus materials, rubbish, tools and equipment barriers.

.2 Remove excess mortar, smears, droppings and splashings using clean sponge and water.

.3 Scrub surfaces clean.

.4 Waste Management: separate waste materials for reuse and recycling in accordance with Section 01 74 20.

PART 1 - GENERAL

1.1 REFERENCES

.1 American Society for Testing and Materials International, (ASTM):
.1 ASTM A123/A123M-13, Standard Specification for Zinc (Hot-Dip Galvanized) Coatings on Iron and Steel Products.
.2 ASTM F593-13a, Standard Specification for Stainless Steel Bolts, Hex Cap Screws, and Studs.

.2 Canadian Standards Association (CSA):
.1 CSA G40.20-13/G40.21-13, General Requirements for Rolled or Welded Structural Quality Steel/Structural Quality Steel.
.2 CSA S16-14, Design of Steel Structures.
.3 CSA S136-12, North American Specification for the Design of Cold Formed Steel Structural Members.
.4 CSA W59-13, Welded Steel Construction (Metal Arc Welding).

.3 The Master Painters Institute (MPI) / Architectural Painting Specification Manual - 2014.
.1 MPI #79 - Primer, Alkyd, Anti-Corrosive for Metal.

1.2 DESIGN REQUIREMENTS

.1 Design details and connections, where not shown on Drawings, in accordance with CAN/CSA-S16 and CSA S136.

1.3 SUBMITTALS

.1 Submit shop drawings and product data of each item specified in accordance with Sections 01 33 00 and 01 78 00.
.1 Indicate materials, core thicknesses, finishes, connections, joints, method of anchorage, number of anchors, supports, reinforcement, live loads, dead loads, details and accessories.
.2 Each shop drawing submission shall bear signature and stamp of qualified Professional Engineer registered or licensed in Province of Ontario.

1.4 DELIVERY, STORAGE AND HANDLING

.1 Deliver, store and handle materials in accordance with Section 01 61 00 and with manufacturer's written instructions.

.2 Delivery and Acceptance Requirements: deliver materials to site in original factory packaging, labelled with manufacturer's name and address.

.3 Storage and Handling Requirements: Store materials off ground and in accordance with manufacturer's recommendations in clean, dry, well-ventilated area.

.4 Replace defective or damaged materials with new.

PART 2 - PRODUCTS

2.1 MATERIALS

.1 Steel: to CSA G40.20/G40.21, Grade 300W.

.2 Hollow Structural Sections (HSS): to CSA G40.20/G40.21, Grade 350W, Class H.

.3 Alkyd primer: to MPI #79, E3 environmental rating.

.4 Galvanizing: hot dip, unpassivated, to ASTM A123/A123M, Coating Grade 85, minimum 600 g/m^2.

.5 Zinc rich primer for galvanized surfaces: zinc rich, readymix, Ecologo certified.

.6 Grout: non-shrink, non-metallic, flowable, 24 h, 15 MPa, pullout strength 7.9 MPa.

.7 SS bolts, nuts and washers: stainless steel to ASTM F593.

2.2 FABRICATION

.1 Fit joints in true planes and securely fasten.

.2 Weld to CSA W59. File or grind welds smooth and flush with adjoining surface.

.3 Shop assemble work.

PART 3 - EXECUTION

3.1 INSTALLATION

.1 Supply other sections with templates, instructions and built-in items.

.2 Install work straight, plumb and level to a tolerance of 1:600.

.3 Provide required reinforcing and anchorage.

.4 Touch-up burnt, scratched or chipped primer.

3.2 LOOSE ANGLE LINTELS

.1 Supply masonry section with steel loose angle lintels of sizes required to suit masonry openings.

.2 Apply alkyd primer to interior lintels.

.3 Provide 150 mm bearing at ends.

.4 Weld or bolt together back-to-back angles.

3.3 LATERAL SUPPORT ANGLES FOR MASONRY PARTITIONS

.1 Supply masonry section with steel angles to provide lateral support of masonry partitions where they abutt the underside of deck.

.2 Apply alkyd primer.

3.4 MISCELLANEOUS STEEL BRACKETS, SUPPORTS, AND ANGLES

.1 Supply and install or supply for installation by trades responsible, all loose steel brackets, supports, angles, and anchors where indicated, except where such brackets, supports, angles and anchors are specified under work of other Sections. Drill for countersunk screws, expansion anchors and anchor bolts. Provide adhesive anchors where required.

.2 Unless otherwise specified, prime paint for interior installation; galvanized finish for humid areas.

3.5 CLEANING

.1 Progress Cleaning: clean in accordance with Section 01 74 11.

.1 Leave Work area clean at end of each day.

.2 Final Cleaning: upon completion remove surplus materials, rubbish, tools and equipment in accordance with Section 01 74 11.

3.6 PROTECTION

.1 Protect installed products and components from damage during construction.

.2 Repair damage to adjacent materials caused by metal fabrications installation.

END

PART 1 - GENERAL

1.1 REFERENCES

.1 American Wood Protection Association (AWPA):
.1 AWPA P8-14, Standard for Oil-Borne Preservatives.

.2 Canadian Standards Association (CSA):
.1 CSA O80 Series-08(R2012) Consolidated - Wood Preservation.
.2 CAN/CSA-O86-14, Engineering Design in Wood.
.3 CSA O112.10-08(R2013), Evaluation of Adhesives for Structural Wood Products (Limited Mositure Exposure).
.4 CSA O121-08(R2013), Douglas Fir Plywood.

.3 South Coast Air Quality Management District (SCAQMD):
.1 SCAQMD Rule 1168-11, Adhesive and Sealant Applications.

.4 National Lumber Grades Authority Standard Grading Rules for Canadian Lumber, 2014.

1.2 QUALITY ASSURANCE

.1 Lumber by grade stamp of an agency certified by Canadian Lumber Standards Accreditation Board.

.2 Plywood in accordance with CSA and ANSI standards.

PART 2 - PRODUCTS

2.1 MATERIALS

.1 Wood: S-DRY, graded and stamped to National Lumber Grades Authority, Standard Grading Rules for Canadian Lumber, S4S.
.1 Blocking, furring, strapping, bracing: spruce, pine or fir (SPF), 121d. and pine, 113d.

.2 Fastenings: to CAN/CSA-086.

.3 Douglas fir plywood: to CSA 0121, urea formaldehyde free. Thickness as indicated.
.1 Panelling: G1S Good One Side Grade, sanded surfaces to Tables E-1 and E-2.

2.1 MATERIALS (Cont'd)

.4 Field applied wood preservative: copper napthenate to AWPA P8, green colour.

.5 Fire retardant treated plywood: Douglas Fir to CSA O121, G1S, fire retardant treated to CSA O80, maximum flame spread 25, maximum smoke developed 25.
.1 Backboard: 19 mm thick, sanded, to Table E-1.

.6 Construction adhesive: to CSA O112.10, cartridge loaded.
.1 Maximum allowable VOC limit 140 g/L.
.2 SCAQMD Rule 1168, Adhesives and Sealants Applications.

PART 3 - EXECUTION

3.1 INSTALLATION

.1 Apply wood preservative to wood in contact with concrete and masonry.

.2 Construct continuous members from pieces of longest practical length.

.3 Miscellaneous blocking:
.1 Fit and install wood furring, strapping, grounds and blocking. Adequately size, correctly place and conceal members for finishes, fitments and for Work under other Sections. Do not assume that Drawings show required work exactly or completely. Anchor wood members securely in place.
.2 Install rough bucks, nailing strips and linings to rough openings as required for backing for frames and other Work.
.3 Except where steel supports are specifically shown, provide wood blocking and supports in metal stud partitions for fastening of wall mounted accessories. Have respective trades approve the location of such wood blocking.
.4 Bolt wood blocking or nailing strips to steel framing.
.5 Set items in place plumb, straight and level to a tolerance of 1:600 and rigidly secure in place.
.6 Use fire retardant lumber for blocking/framing in ceiling\spaces, partitions and bulkheads.

PART 1 - GENERAL

1.1 REFERENCES

.1 American Society for Testing and Materials International, (ASTM):
.1 ASTM D412-06a(2013) Standard Test Methods for Vulcanized Rubber and Thermoplastic Elastomers-Tension.
.2 ASTM D3330/D3330M-04(2010), Standard Test Method for Peel Adhesion of Pressure-Sensitive Tape.
.3 ASTM E96/E96M-13, Standard Test Methods for Water Vapor Transmission of Materials.
.4 ASTM E2178-13, Standard Test Method for Air Permeance of Building Materials.

1.2 PRODUCT DATA SHEETS

.1 Submit product data sheets of air/vapour barrier in accordance with Sections 01 33 00 and 01 78 00.

.2 For adhesives, primers and sealants, indicate VOC in g/L during application and curing.

1.3 ENVIRONMENTAL CONDITIONS

.1 Weather and surfaces dry.

.2 Imminent weather forecast, dry.

1.4 INSPECTION

.1 Air/vapour barriers installation must be inspected by Departmental Representative before work is covered. Notify Departmental Representative when complete installation is ready for inspection.

1.5 DELIVERY AND STORAGE

.1 To manufacturer's instructions.

.2 Do not store material on roof.

.3 Under cover on elevated platform.

.4 In original package, labels intact.

1.5 DELIVERY AND STORAGE (Cont'd)

.5 Remove and replace damaged, wet or broken material.

.6 Stand rolls on end, protect edges.

PART 2 - PRODUCTS

2.1 MATERIAL

.1 Air/vapour barrier membrane (self adhesive): 0.25 mm thick, non-asphaltic-based, low VOC, air, moisture and water impermeable membrane with high-tack acrylic pressure sensitive adhesive and meeting the below criteria:
.1 Air permeance: <0.0002 l/s/m^2 at 75 Pa pressure differential to ASTM E2178.
.2 Water vapour permeance: 8 ng/Pa.s.m^2 to ASTM E96/E96M, Desiccent Method.
.3 Tensile strength: 12 MPa to ASTM D412.
.4 Elongation at break: 700% to ASTM D412.
.5 Lap adhesion: 0.44 N/mm to ASTM D3330/D3330M.

.2 Accessories:
.1 Provide all accessories as recommended by membrane manufacturer including but not limited to sealants, tapes and primers.
.2 Types as recommended by membrane manufacturer to suit intended application.

PART 3 - EXECUTION

3.1 PREPARATION

.1 Remove loose material and scrape surface smooth.

.2 Remove water and condensation from surfaces.

.3 Clean surfaces of foreign and bituminous substances.

.4 Roll on primer at manufacturer recommended coverage rate in accordance with manufacturer's written instructions.

.5 Fill gaps and joints over 6 mm wide with joint filler. Reinforce with 305 mm wide strip of membrane.

3.2 APPLICATION

.1 Apply self adhesive air/vapour barrier membrane to intended substrate to maintain continuity of air/vapour barrier in accordance with manufacturer's written instructions and details.

.2 Lap side and end joints minimum 50 mm.

.3 Fold starting edge back over itself to crease the paper release liner. Peel back liner to expose a starting 50-75 mm adhesive strip.

.4 Roll air/vapour barrier and laps for continuous adhesion over entire substrate area; use manufacturer's recommended roller.

.5 Cut and fit air/vapour barrier as required for passage of protrusions, ensuring continuous adherence to substrate.

END

PART 1 - GENERAL

1.1 REFERENCES

.1 Health Canada/Workplace Hazardous Materials Information System (WHMIS)
.1 Material Safety Data Sheets (MSDS).

.2 Underwriter's Laboratories of Canada (ULC)
.1 CAN/ULC-S115-11, Standard Method of Fire Tests of Firestop Systems.

1.2 DEFINITIONS

.1 Fire Stop Material: device intended to close off opening or penetration during fire or materials that fill openings in wall or floor assembly where penetration is by cables, cable trays, conduits, ducts and pipes and poke-through termination devices, including electrical outlet boxes along with their means of support through wall or floor openings.

.2 Single Component Fire Stop System: fire stop material that has Listed Systems Design and is used individually without use of high temperature insulation or other materials to create fire stop system.

.3 Multiple Component Fire Stop System: exact group of fire stop materials that are identified within Listed Systems Design to create on site fire stop system.

.4 Continuity of Fire Separations: NBC 2010, Division B, Parts 3.1.8 and 3.1.9.1, 9.10.9):
.1 Wall, partition or floor assemblies required to be a fire separation shall be: constructed as a continuous element; have a fire resistance rating; have openings protected by a closure; and have penetrations sealed by a firestop.

1.3 SUBMITTALS

.1 Provide submittals in accordance with Section 01 33 00.

.2 Product Data:
.1 Submit manufacturer's printed product literature, specifications and data sheet and

1.3 SUBMITTALS (Cont'd)

.2 Product Data:(Cont'd)
.1 (Cont'd)
include product characteristics, performance criteria, physical size, finish and limitations.
.2 Submit two copies of WHMIS MSDS - Material Safety Data Sheets.

.3 Shop Drawings:
.1 Submit shop drawings to show proposed material, reinforcement, anchorage, fastenings and method of installation.
.2 Construction details should accurately reflect actual job conditions.

1.4 QUALITY ASSURANCE

.1 Qualifications:
.1 Installer: company specializing in fire stopping installations and approved by manufacturer.
.2 All fire stopping material shall be from one manufacturer.
.3 All fire stopping installation work for entire project shall be by a single contractor experienced in firestopping. Individual disciplines shall NOT fire stop their own work.

1.5 DELIVERY, STORAGE AND HANDLING

.1 Packing, shipping, handling and unloading:
.1 Deliver, store and handle materials in accordance with Section 01 61 00.
.2 Deliver, store and handle materials in accordance with manufacturer's written instructions.
.3 Deliver materials to the site in undamaged condition and in original unopened containers, marked to indicate ULC markings.

.2 Storage and Protection:
.1 Store materials in dry location and in accordance with manufacturer's recommendations in clean, dry, well-ventilated area.
.2 Replace defective or damaged materials with new.

.3 Waste Management and Disposal:
.1 Separate waste materials for reuse and recycling in accordance with Section 01 74 20.

PART 2 - PRODUCTS

2.1 MATERIALS

.1 Fire stopping and smoke seal systems: in accordance with CAN/ULC-S115.
   .1 Asbestos-free materials and systems capable of maintaining effective barrier against flame, smoke and gases in compliance with requirements of CAN/ULC-S115 and not to exceed opening sizes for which they are intended.
   .2 Fire stop system rating: F or FT to match existing.

.2 Service penetration assemblies: systems tested to CAN/ULC-S115.

.3 Service penetration fire stop components: certified by test laboratory to CAN/ULC-S115.

.4 Fire-resistance rating of installed fire stopping assembly in accordance with NBC.

.5 Fire stopping and smoke seals at openings intended for ease of re-entry such as cables: elastomeric seal.

.6 Fire stopping and smoke seals at openings around penetrations for pipes, ductwork and other mechanical items requiring sound and vibration control: elastomeric seal.

.7 Primers: to manufacturer's recommendation for specific material, substrate, and end use.

.8 Water (if applicable): potable, clean and free from injurious amounts of deleterious substances.

.9 Damming and backup materials, supports and anchoring devices: to manufacturer's recommendations, and in accordance with tested assembly being installed as acceptable to authorities having jurisdiction.

.10 Sealants for vertical joints: non-sagging.

PART 3 - EXECUTION

3.1 MANUFACTURER'S INSTRUCTIONS

.1 Compliance: comply with manufacturer's written recommendations or specifications, including product technical bulletins, handling, storage and installation instructions, and datasheets.

3.2 PREPARATION

.1 Examine sizes and conditions of voids to be filled to establish correct thicknesses and installation of materials.
.1 Ensure that substrates and surfaces are clean, dry and frost free.

.2 Prepare surfaces in contact with fire stopping materials and smoke seals to manufacturer's instructions.

.3 Maintain insulation around pipes and ducts penetrating fire separation.

.4 Mask where necessary to avoid spillage and over coating onto adjoining surfaces; remove stains on adjacent surfaces.

3.3 INSTALLATION

.1 Install fire stopping and smoke seal material and components in accordance with manufacturer's certified tested system listing.

.2 Seal holes or voids made by through penetrations, poke-through termination devices, and unpenetrated openings or joints to ensure continuity and integrity of fire separation are maintained.

.3 Provide temporary forming as required and remove forming only after materials have gained sufficient strength and after initial curing.

.4 Tool or trowel exposed surfaces to neat finish.

.5 Remove excess compound promptly as work progresses and upon completion.

3.4 SCHEDULE

.1 Fire stop and smoke seal at:
.1 Penetrations through fire-resistance rated masonry, concrete and gypsum board partitions and walls.
.2 Top of fire-resistance rated masonry and gypsum board partitions.
.3 Intersection of fire-resistance rated masonry and gypsum board partitions.
.4 Control and sway joints in fire-resistance rated masonry and gypsum board partitions and walls.
.5 Penetrations through fire-resistance rated floor slabs, ceilings and roofs.
.6 Openings and sleeves installed for future use through fire separations.
.7 Around mechanical and electrical assemblies penetrating fire separations.

3.5 CLEANING

.1 Proceed in accordance with Section 01 74 11.

.2 On completion and verification of performance of installation, remove surplus materials, excess materials, rubbish, tools and equipment.

.3 Remove temporary dams after initial set of fire stopping and smoke seal materials.

END

PART 1 - GENERAL

1.1 RELATED SECTIONS

.1 Section 04 20 00: Sealing unit masonry.

.2 Section 09 30 14: Sealing tile.

1.2 REFERENCES

.1 ASTM International (ASTM):
.1 ASTM C920-14a, Standard Specification for Elastomeric Joint Sealants.
.2 ASTM E90-09, Standard Test Method for Laboratory Measurement of Airborne Sound Transmission Loss of Building Partitions and Elements.

.2 Canadian General Standards Board (CGSB):
.1 CAN/CGSB-19.17-M90, One Component Acrylic Emulsion Base Sealing Compound.

.3 Environmental Choice Program (ECP):
.1 ECP/PCE-45-92, Sealants and Caulking.

1.3 DESIGN REQUIRMENTS

.1 Minimum sound transmission rating of installed partition, floor and ceiling to desired STC rating, tested to ASTM E90.

1.4 ENVIRONMENTAL CHOICE PROGRAM

.1 Provide sealant products bearing the 'Ecologo' of the Environmental Choice Program, Department of the Environment, Canadian Environmental Protection Act, Environmental Choice Product Guidelines ECP/PCE-45 for Sealants and Caulking Compounds, except maximum VOC 60 g/L during application and curing.

.2 For primers and sealants, indicate VOC in g/L during application and curing.

1.5 SUBMITTALS

.1 Submit manufacturer's literature indicating recommended surface preparation, sealant selection and primer for each substrate in accordance with Sections 01 33 00 and 01 78 00.

1.6 DELIVERY, STORAGE, AND HANDLING

.1 Deliver, handle, store and protect materials in accordance with Section 01 61 00.

.2 Deliver and store materials in original wrappings and containers with manufacturer's seals and labels, intact. Protect from freezing, moisture, water and contact with ground or floor.

1.7 WASTE MANAGEMENT AND DISPOSAL

.1 Separate waste materials for reuse and recycling in accordance with Section 01 74 20.

.2 Remove from site and dispose of packaging materials at appropriate recycling facilities.

.3 Collect and separate for disposal paper, plastic, polystyrene, corrugated cardboard, packaging material in appropriate on-site bins for recycling in accordance with Waste Management Plan.

.4 Place materials defined as hazardous or toxic in designated containers.

.5 Handle and dispose of hazardous materials in accordance with the CEPA, TDGA, Regional and Municipal regulations.

.6 Unused sealant material must not be disposed of into sewer system, into streams, lakes, onto ground or in other location where it will pose health or environmental hazard.

.7 Divert unused joint sealing material from landfill to official hazardous material collections site approved by Departmental Representative.

.8 Empty plastic joint sealer containers are not recyclable. Do not dispose of empty containers with plastic materials destined for recycling.

.9 Fold up metal banding, flatten, and place in designated area for recycling.

1.8 SITE CONDITIONS

.1 Conform to manufacturer's requirements and maintain a minimum temperature of 5 deg.C for a minimum period of 24 h before application, during, and until application is fully cured.

.2 Maintain sealant at a minimum 18 deg.C for best workability.

PART 2 - PRODUCTS

2.1 SEALANTS

.1 Provide sealant products bearing Ecologo to ECP/PCE-45 with maximum VOC 60 g/L.

2.2 SEALANT MATERIAL DESIGNATIONS

.1 Silicones One Part '3'.
.1 To ASTM C920, primerless, Type S, Grade NS, Class 50, SWRI validated.

.2 Interior glazing sealant: In accordance with Section 08 80 00.

.3 Acrylic Latex One Part '5'.
.1 To CAN/CGSB-19.17-M.

.4 Acoustical Sealant '6'.
.1 One part silicone to ASTM C920, primerless, Type S, Grade NS, Class 25, SWRI validated.

2.3 SEALANT SELECTION

.1 Perimeters of interior frames, as detailed and itemized: Designations 3.

.2 Interior masonry vertical control joints (block-to-block, block-to-concrete, and intersecting masonry walls): Designations 3.

.3 Joints at tops of non-load bearing masonry walls at the underside of poured concrete: Designations 5, 6.

.4 Perimeter of fixtures (e.g. sinks, basins): Designations 3, 5.

.5 Exposed interior control joints in drywall: Designations 5, 6.

2.4 JOINT CLEANER

.1 Non-corrosive and non-staining type, compatible with joint forming materials and sealant recommended by sealant manufacturer.

.2 Primer: to manufacturer's recommendations.

PART 3 - EXECUTION

3.1 PREPARATION OF JOINT SURFACES

.1 Examine joint sizes and conditions to establish correct depth to width relationship for installation of backup materials and sealants.

.2 Clean bonding joint surfaces of harmful matter substances including dust, rust, oil grease, and other matter which may impair work.

.3 Do not apply sealants to joint surfaces treated with sealer, curing compound, water repellent, or other coatings unless tests have been performed to ensure compatibility of materials. Remove coatings as required.

.4 Ensure joint surfaces are dry and frost free.

.5 Prepare surfaces in accordance with manufacturer's directions.

3.2 PRIMING

.1 Where necessary to prevent staining, mask adjacent surfaces prior to priming and caulking.

.2 Prime sides of joints in accordance with sealant manufacturer's instructions immediately prior to caulking.

3.3 BACKUP MATERIAL

.1 Apply bond breaker tape where required to manufacturer's instructions.

.2 Install joint filler to achieve correct joint depth and shape with approximately 30% compression.

3.4 MIXING

.1 Mix materials in accordance with sealant manufacturer's instructions.

3.5 APPLICATION

.1 Ventilate interior spaces during application and curing of sealants to maintain VOCs less than 50 g/l. Coordinate with building manager to ensure existing ventilation system or temporary ventilation supllies sufficient outside air.

.2 Sealant.

.1 Protect installed work of other trades from staining or contamination.

.2 Apply sealant in accordance with manufacturer's application manual and written instructions. Maintain STC rating of assemblies.

.3 Mask edges of joint where irregular surface or sensitive joint border exists to provide neat joint. remove tape after sealant applied.

.4 Apply sealant in continuous beads.

.5 Apply sealant using gun with proper size nozzle.

.6 Use sufficient pressure to fill voids and joints solid.

.7 Form surface of sealant with full bead, smooth, free from ridges, wrinkles, sags, air pockets, embedded impurities.

.8 Tool exposed surfaces before skinning begins to give slightly concave shape.

.3 Curing.

.1 Cure sealants in accordance with sealant manufacturer's instructions.

.2 Do not cover up sealants until proper curing has taken place.

.4 Cleanup.

.1 Clean adjacent surfaces immediately and leave work neat and clean.

.2 Remove excess and droppings, using recommended cleaners as work progresses.

.3 Remove masking tape after initial set of sealant.

END

PART 1 - GENERAL

1.1 RELATED SECTIONS

.1 Section 04 20 00: Building-in and grouting frames in masonry.

.2 Section 07 90 00: Caulking of joints between frames and other building components.

.3 Section 08 71 11: Hardware.

.4 Section 08 80 00: Glazing.

.5 Section 09 21 16: Building-in frames into steel stud walls

1.2 REFERENCES

.1 American National Standards Institute (ANSI):
.1 ANSI/BHMA A156.16-2013, Auxiliary Hardware.

.2 American Society for Testing and Materials International (ASTM)
.1 ASTM A568/A568M-14, Standard Specification for Steel, Sheet, Carbon, Structural, and High-Strength, Low-Alloy, Hot-Rolled and Cold-Rolled, General Requirements for.
.2 ASTM A653/A653M-13, Standard Specification for Steel Sheet, Zinc-Coated (Galvanized) or Zinc-Iron Alloy-Coated (Galvannealed) by the Hot-Dip Process.

.3 Canadian Steel Door Manufacturers Association (CSDMA)
www.csdma.org/english/publications.html
.1 Recommended Dimensional Standards For Commercial Steel Doors and Frames 2009.
.2 Recommended Selection and Usage Guide for Commercial Steel Door and Frame Products 2009.
.3 Recommended Specifications for Sound Retardant Steel Doors and Frames 2009.
.4 Fire Labelling Guide 2009.

.4 National Fire Protection Association (NFPA)
.1 NFPA 80-2013, Standard for Fire Doors and Other Opening Protectives.
.2 NFPA 252-2012, Standard Methods of Fire Tests of Door Assemblies.

1.2 REFERENCES (Cont'd)

.5 Underwriters Laboratories Canada (ULC)
.1 CAN/ULC-S104-10, Standard Method For Fire Tests of Door Assemblies.
.2 CAN/ULC-S105-09, Standard Specification for Fire Door Frames Meeting the Performance Required by CAN/ULC-S104.
.3 CAN/ULC-S702-09, Standard for Mineral Fibre Thermal Insulation for Buildings.

1.3 PRODUCT DATA SHEETS

.1 Submit product data sheets in accordance with Sections 01 33 00 and 01 78 00.

1.4 QUALIFICATIONS

.1 The manufacturer of steel doors and frames supplied under this section will be a member of the CSDMA - Canadian Steel Door Manufacturers Association.

1.5 REQUIREMENTS OF REGULATORY AGENCIES

.1 Steel fire rated doors and frames: labelled and listed by an organization accredited by Standards Council of Canada in conformance with CAN/ULC-S104, CAN/ULC-S105 and NFPA 252 for ratings specified or indicated.

.2 Provide fire labelled frame products for those openings requiring fire protection ratings, as scheduled. Test products in strict conformance with CAN/ULC-S104 and list by nationally recognized agency having factory inspection service and construct as detailed in Follow-Up Service Procedures/Factory Inspection Manuals issued by listing agency to individual manufacturers.

PART 2 - PRODUCTS

2.1 MATERIALS

.1 Metal: tension levelled sheet steel to ASTM A568/A568M, Class 1, with ZF120 zinc coating on both sides designation to ASTM A653/A653M.

.2 Door cores:
.1 Continuous interlocking steel ribs: 0.9 mm thick continuous interlocking steel stiffeners at 150 mm O.C., securely welded to each face sheet 150 mm O.C. maximum.
.1 Voids between stiffeners Fibreglass: loose batt type, density: 24 kg/m^3 minimum, to CAN/ULC-S702, Type 1, Ecologo certified.

.3 Filler: polyester based.

.4 Primer: zinc rich, organic, ready mix, Ecologo certified.

.5 Door bumpers: to ANSI/BHMA-A156.16, type L03011.

2.2 FABRICATION

.1 To Canadian Steel Door Manufacturers Association (CSDMA), "Recommended Specifications for Commercial Steel Doors and Frames", "Recommended Dimensional Standards for Commercial Steel Doors and Frames" and CAN/ULC-S105 "Standard Specification for Fire Door Frames Meeting the Performance Required by CAN/ULC-S104".

.2 Doors: material thickness, opening classification and duty rating to CSDMA "Recommended Selection and Usage Guide For Commercial Steel Doors", hollow steel construction, filled with insulation, edges continuously welded or filled and sanded flush with no visible seams. Close bottom edge of doors where indicated.
.1 Fire rated dooors to meet fire ratings as indicated on Contract Drawings.

.3 Frames and screens: 1.6 mm steel, welded type. Anchors adjustable, type to suit each jamb condition.

.4 Glass mouldings: formed steel.

2.2 FABRICATION (Cont'd)

.5 Install 3 door bumpers on strike jamb of single doors.

.6 Coordinate with applicable Sections as required for new security devices at new hollow metal doors and frames and existing laboratory doors and frames. Coordinate with applicable Sections as required for this preparation work at intended locations.

PART 3 - EXECUTION

3.1 INSTALLATION

.1 Install frames, screens, doors and hardware plumb, square and level in accordance with manufacturer's instructions and templates.

.2 Install labelled steel fire rated doors and frames to NFPA 80.

.3 Provide even margins between doors and jambs and doors and flooring and thresholds as follows:
.1 Hinge side: 1.0 mm.
.2 Latch side and head: 1.5 mm.
.3 Flooring and thresholds: 13 mm.

.4 Secure anchorages and connections to adjacent construction.

.5 Touch-up with primer scratched or damaged zinc finish.

3.2 CLEANING

.1 Clean doors, frames and screens.

.2 Upon completion remove surplus materials, rubbish, tools and equipment.

END

PART 1 - GENERAL

1.1 RELATED SECTIONS

.1 Section 08 80 00: Glazing.

1.2 REFERENCES

.1 Aluminum Association (AA)
.1 DAF 45-2003(R2009), Designation System for Aluminum Finishes.

.2 American Architectural Manufacturers Association (AAMA)
.1 AAMA 611-14, Voluntary Specification for Anodized Architectural Aluminum.

.3 ASTM International (ASTM)
.1 ASTM B209-14, Standard Specification for Aluminum and Aluminum-Alloy Sheet and Plate.
.2 ASTM B211-12e1, Standard Specification for Aluminum and Aluminum-Alloy Sheet and Plate (Metric).

1.3 SHOP DRAWINGS

.1 Submit shop drawings in accordance with Sections 01 33 00 and 01 78 00.

PART 2 - PRODUCTS

2.1 MATERIALS

.1 Aluminum extrusions: to conforming to ASTM B209 and ASTM B211, Aluminum Association Designation AA6063-T5 in finish designation AA-A31 clear anodized to AAMA 611.

.2 Fasteners: stainless steel, Type 304.

.3 Bituminous paint: epoxy solution or acid and alkali resistant bituminous paint, Ecologo certified.

2.2 FABRICATION

.1 To profiles and dimensions shown.

.2 Fabricate sections true to detail, free from defects impairing appearance, strength and

2.2 FABRICATION (Cont'd)

.2 (Cont'd)
durability. Fabricate extrusions with sharp, well defined corners.

.3 No visible nameplates.

.4 Fabricate filler and closure pieces as necessary for a complete installation.

PART 3 - EXECUTION

3.1 INSTALLATION

.1 Apply bituminous paint to aluminum in contact with concrete or masonry.

.2 Units plumb, square and level, free of warp, twist and superimposed loads.

.3 Securely anchor units in place with concealed fasteners.

.4 Install window closures and trim pieces.

3.2 CLEANING

.1 Clean windows.

.2 Upon completion remove surplus materials, rubbish, tools and equipment.

END

PART 1 - GENERAL

1.1 RELATED SECTIONS

.1 Section 08 11 13: Hollow metal door frames.

.2 Division 26: Electrical work, conduit and wiring for electrical hardware.

1.2 REFERENCES

.1 American National Standards Institute (ANSI)/ Builders Hardware Manufacturers Association (BHMA):
.1 ANSI/BHMA A156.1-2013, American National Standard for Butts and Hinges.
.2 ANSI/BHMA A156.2-2011, Bored and Preassembled Locks and Latches.
.3 ANSI/BHMA A156.4-2013, Door Controls - Closers.
.4 ANSI/BHMA A156.5-2014,Cylinders and Input Devices for Locks.
.5 ANSI/BHMA A156.6-2010, Architectural Door Trim.
.6 ANSI/BHMA A156.16-2013, Auxiliary Hardware.
.7 ANSI/BHMA A156.21-2009, Thresholds.
.8 ANSI/BHMA A156.28-2013, Recommended Practices for Keying Systems.
.9 ANSI/BHMA A156.115-2006, American National Standard for Hardware Preparation in Steel Doors and Steel Frames.

.2 American Society for Testing and Materials (ASTM):
.1 ASTM E283-04(2012), Standard Test Method for Determining Rate of Air Leakage Through Exterior Windows, Curtain Walls, and Doors Under Specified Pressure Differences Across the Specimen.

.3 Canadian Standards Association (CSA):
.1 CSA B651-12, Accessible Design for the Built Environment.

.4 Canadian Steel Door Manufacturers' Association (CSDFMA)
.1 CSDMA Recommended Dimensional Standards for Commercial Steel Doors and Frames - 2009.

.5 Door Hardware Institute:
.1 Architectural Door and Hardware Schedules and Specifications, latest edition.

1.2 REFERENCES (Cont'd)

.5 Door Hardware Institute:(Cont'd)
.2 Sequence and Format for the Hardware Schedule, latest edition.

.6 Underwriters Laboratories (UL):
.1 UL 437-13, Key Locks.

.7 Underwriters Laboratories Canada (ULC)
.1 CAN/ULC-S104-10, Standard Method For Fire Tests of Door Assemblies.

1.3 PRODUCT DATA SHEETS

.1 Submit one copy of product data sheets in accordance with Sections 01 33 00 and 01 78 00.

.2 Product data sheets shall consist of catalogue cuts, manufacturer's name and number, finish and reference identification to specified standard.

1.4 SCHEMATIC DIAGRAMS

.1 Submit schematic diagrams of electrical components for inclusion in maintenance manual specified in Sections 01 33 00 and 01 78 00.

1.5 REFERENCES

.1 Standard hardware location dimensions in accordance with Canadian Metric Guide for Steel Doors and Frames (Modular Construction) prepared by CSDMA - Canadian Steel Door Manufacturers' Association and CSA B651, Accessible Design for the Built Environment.

.2 Use abbreviations and symbols recommended in "Abbreviations and Symbols as used in Architectural Door and Hardware Schedules and Specifications", published by the Door and Hardware Institute.

.3 Use hardware schedule format recommended in "Sequence and Format for the Hardware Schedule", published by the Door and Hardware Institute.

1.6 DEFINITIONS

.1 Master Key (MK):
.1 A key which operates all the master keyed locks or cylinders in a group, each lock or cylinder usually operated by its own change key.
.2 To combinate a group of locks or cylinders such that each is operated by its own key as well as by a master key for the entire group.

.2 Master Key System:
.1 Any keying arrangement which has two or more levels of keying.
.2 A keying arrangement which has exactly two levels of keying.

1.7 REGULATORY REQUIREMENTS

.1 Use ULC listed and labelled hardware for doors in fire rated partitions and fire exits.

.2 Use UL 437 listed cylinders in locking devices where indicated on door and frame schedule, to security rating indicated.

1.8 HARDWARE LIST

.1 Submit hardware schedule in accordance with Sections 01 33 00 and 01 78 00.

.2 Submit literature cuts, indicating hardware proposed, including make, model, base material, function, ANSI Function where ANSI used in this specification, Grade, Type, Series, BHMA finish, trim, UL listing, manufacturer and other pertinent information. Indicate which model or accessory is being provided where more than one model or accessory appears on a page.

PART 2 - PRODUCTS

2.1 KEYING, ACCESSORIES AND FINISH

.1 Each lock different key under existing master key MK system, 2 keys per lock, 2 master keys.
  .1 Keying systems: to ANSI/BHMA-A156.28.

.2 Provide accessories with hardware.

.3 626 finish (satin chrome plated on brass or bronze) unless noted otherwise.

.4 Finish fasteners to match the exposed surface on which they appear.

.5 Provide temporary construction keying.

.6 Final keying: to ANSI/BHMA-A156.5, Grade 1.

.7 Use lock and latch sets with solid metal, U shape, lever handles meeting requirements of CSA B651, Accessible Design for the Built Environment, clause 5.2.7 Door Hardware and Figure 20, unless specified otherwise.

.8 Provide lever handles of same style for bored and mortise locksets.

.9 Door prep: to ANSI/BHMA-A156.115 for steel doors and frames.

2.2 MATERIALS

.1 Hinge: to ANSI/BHMA-A156.1, Grade indicated, 626 satin chrome, use anti-friction (ball) bearing hinges with closers, one hinge for each 750 mm of door height, 115 mm hinges on 45 mm doors, button tips, non- rising removable pins unless indicated NRP on hardware schedule.
  .1 Interior:
    .1 Grade 1: A8111 - heavy weight, steel, 4 ball bearing.

.2 Door closer: to ANSI/BHMA-A156.4, Grade 1, surface closer, modern type with cover, sprayed enamel finish, metallic to match existing, size to suit door width and mass, integral shock absorbing back check. Closers will have been tested to 10,000,000 cycles without failure where required by hardware schedule. Disabled access doors: to operate at

2.2 MATERIALS (Cont'd)

.2 Door closer:(Cont'd)
a minimum pressure not exceeding 22 N for interior doors and close in not less than 5 seconds from an open position of 90°.

.3 Lock and latch set (bored): to ANSI/BHMA-A156.2, Series 4000, Grade 1, bolted through door, ANSI door prep ANSI/BHMA-A156.115 for steel doors and frames, deadlatching bolt, function indicated, UL 437 listed cylinder, finish to match existing.

.4 Normal strikes: box type, lip projection not beyond jamb ASA dimensions.

.5 Electric strikes: to ANSI/BHMA-A156.5, to be Owner supplied and Contractor installed.

.6 Power transfer: non-load bearing, concealed when door closed, UL listed for Burglary Protection and Class 1 low voltage installation, rated for and compatible with power supply and electric latch, ten 24 gauge wires, 24VDC, 1 ampere.

.7 Kick plate: to ANSI/BHMA-A156.6, type J102 stainless steel, 1.55 x 250 mm x door width, 3 bevelled edges.

.8 Floor door stop: to ANSI/BHMA-A156.16, dome type, cushion secured by concealed fasteners, anti-rotation stud, type L22141 finish 626 for doors without threshold and type L22161, finish 626 for doors with threshold.

.9 Threshold: to ANSI/BHMA-A156.21, type J32190, aluminum serrated exposed surface, finish 628.

.10 Smoke seal gasketing: extruded aluminum, mill finish, surface screw applied to pull side of door, at head, jamb and meeting stile, solid neoprene tube, tested to ASTM E283.

.11 Automatic door bottom (surface mounted on push side of door and leaf): Heavy duty type, operable and automatic door seal with neoprene seal and stainless steel cover, having automatic retract mechanism when door is open, approximately 24.6 mm wide x 63.5 mm high, listed and labelled for use in fire doors to suit intended fire rating, in accordance with CAN/ULC-S104.

PART 3 - EXECUTION

3.1 INSTALLATION

.1 Install hardware to standard hardware location dimensions in accordance with Canadian Metric Guide for Steel Doors and Frames (Modular Construction) prepared by Canadian Steel Door and Frame Manufacturers' Association.

3.2 ADJUSTING

.1 Provide services of competent mechanic to inspect installation of hardware furnished under this Section and to supervise all adjustments (by the trade responsible for fixing) which are necessary to leave hardware in perfect working order.

.2 Adjust door hardware, operators, closures and controls for optimum, smooth operating condition, and safety.

.3 Lubricate hardware, operating equipment and other moving parts.

.4 Adjust door hardware to provide tight fit at contact points with frames.

3.3 CLEANING

.1 Perform cleaning after installation to remove construction and accumulated environmental dirt.

.2 Clean hardware with damp rag and approved non-abrasive cleaner, and polish hardware in accordance with manufacture's instructions.

.3 Remove protective material from hardware items where present.

.4 Upon completion of installation, remove surplus materials, rubbish, tools and equipment barriers.

3.4 HARDWARE SCHEDULE

.1 Refer to door hardware schedule and notes appended to Section 00 01 20.

.2 Indicated hardware quantities are for one door only; provide this quantity for each door listed.

END

PART 1 - GENERAL

1.1 RELATED SECTIONS

.1 Section 08 11 13: Glazing at hollow metal doors and screens.

.2 Section 12 35 53: Glazing at laboratory casework.

1.2 REFERENCES

.1 American Society for Testing and Materials International (ASTM):
.1 ASTM C920-14a, Standard Specification for Elastomeric Joint Sealants.
.2 ASTM D2240-05(2010), Standard Test Method for Rubber PropertyDurometer Hardness.

.2 Canadian General Standards Board (CGSB).
.1 CAN/CGSB-12.1-M90, Tempered or Laminated Safety Glass.
.2 CAN/CGSB-12.11-M90, Wired Safety Glass.

1.3 SUBMITTALS

.1 Submit one representative sample of each type of glass and glazing film in accordance with Section 01 33 00.

.2 Approved sample may be installed as part of completed Work.

.3 Submit maintenance data for glazing film to Departmental Representative in accordance with Sections 01 77 00 and 01 78 00.

1.4 QUALITY ASSURANCE

.1 Qualifications of glazing film applicator: trained, approved and certified by glazing film manufacturer. Submit proof of certification in writing to Departmental Representative in accordance with Sections 01 33 00 and 01 78 00.

1.4 QUALITY ASSURANCE (Cont'd)

.2 Glazing film inspection: manufacaturer's representative shall view the film at a distance of 3 m (10 feet) at angles up to 45 degrees from either side of the glass during regular daylight conditions (not in direct sunlight). To be accepted the film itself shall not appear distorted. Submit manufacturer's written inspection report to Departmental Representative in accordance with Sections 01 33 00 and 01 78 00.

PART 2 - PRODUCTS

2.1 MATERIALS

.1 Tempered safety glass (GL-1): to CAN/CGSB-12.1-M, Type 2-tempered, Class B, clear tempered glass, minimum 6 mm thick. Tempered glass at new aluminum window to match existing.

.2 Wired glass (GL-2): to CAN/CGSB-12.11-M, Type 1, Style 3, 6 mm thick, black colour wire.

.3 Glazing film:
.1 Provide frosted and translucent privacy glass film for existing window as indicated. Application pattern as indicated.
.2 Minimum 3.2 mils thick, glass film constructed from durable and flexible polyester materials with pressure-sensitive acrylic adhesive and silicone-coated polyester liner, having frosted/translucent pattern as selected by Departmental Representative.

.4 Setting blocks: neoprene, Shore "A" 80 durometer hardness to ASTM D2240, 100 x 6 mm x width to suit glass.

.5 Glazing tape: preformed butyl with continuous spacer, Shore "A" 10-15 durometer hardness, paper release, black colour, 3 x 9.5 mm.

.6 Sealant: one part silicone to ASTM C920, Type S, Grade NS, Class 50, for typical applications. Glazing sealant at fire rated applications to be as recommended by glazing manufacturer.

PART 3 - EXECUTION

3.1 INSTALLATION

.1 Glass:
- .1 Clean and dry surfaces.
- .2 Apply glazing tape to fixed stops.
- .3 Place setting blocks at 1/3 points.
- .4 Set glass on setting blocks against tape.
- .5 Apply glazing tape to glass.
- .6 Install stops.
- .7 Apply sealant behind stop and tool to smooth surface.

.2 Interior glass: Glaze interior glass using glazing gasket glazing tape.

.3 Door glazing: Coordinate with Section 08 11 13 as required for installation of door vision panels.

.4 Glass film:
- .1 Install glass film in accordance with manufacturer's written instructions.
- .2 Place without air bubbles, creases or visible distortion.
- .3 Fit tight to glass perimeter with razor cut edge.

3.2 CLEANING

.1 Leave Work area clean at end of each day.

.2 Clean glass using approved non-abrasive cleaner in accordance with manufacturer's instructions.

.3 Do not wash glass film for 30 days after installation.

.4 Do not use bristle brushes on glass film.

.5 Upon completion remove surplus materials, rubbish, tools and equipment.

3.3 PROTECTION OF FINISHED WORK

.1 Protect installed products and components from damage during construction.

.2 Repair damage to adjacent materials caused by glazing installation.

END

PART 1 - GENERAL

1.1 RELATED REQUIREMENTS

.1 Acoustical sealant: In accordance with Section 07 90 00.

1.2 REFERENCES

.1 ASTM International
.1 ASTM C475/C475M-12e1, Standard Specification for Joint Compound and Joint Tape for Finishing Gypsum Board.
.2 ASTM C645-14, Standard Specification for Nonstructural Steel Framing Members.
.3 ASTM C840-13, Standard Specification for Application and Finishing of Gypsum Board.
.4 ASTM C1002-14, Standard Specification for Steel Self-Piercing Tapping Screws for the Application of Gypsum Panel Products or Metal Plaster Bases to Wood Studs or Steel Studs.
.5 ASTM C1047-14a, Standard Specification for Accessories for Gypsum Wallboard and Gypsum Veneer Base.
.6 ASTM C1396/C1396M-14a, Standard Specification for Gypsum Board.
.7 ASTM E90-09, Standard Test Method for Laboratory Measurement of Airborne Sound Transmission Loss of Building Partitions and Elements.

.2 Association of the Wall and Ceilings Industries International (AWCI)
.1 AWCI Levels of Gypsum Board Finish 101a-97.

.3 Canadian General Standards Board (CGSB)
.1 CAN/CGSB-51.34-M86(R1988), Vapour Barrier, Polyethylene Sheet for Use in Building Construction.

.4 Underwriters Laboratories Canada (ULC)
.1 ULC Design No. W453-2014, Fire-Resistance Ratings.

1.3 ACTION AND INFORMATIONAL SUBMITTALS

.1 Submit in accordance with Section 01 33 00.

.2 Product Data:
.1 Submit manufacturer's instructions, printed product literature and data sheets for gypsum board assemblies and include product

1.3 ACTION AND INFORMATIONAL SUBMITTALS (Cont'd)

.2 Product Data:(Cont'd)
.1 (Cont'd)
characteristics, performance criteria, physical size, finish and limitations.

.3 Samples:
.1 Submit for review and acceptance of each unit.
.2 Samples will be returned for inclusion into work.
.3 Submit duplicate 300 mm long samples of corner and casing beads.

1.4 DESIGN REQUIREMENTS

.1 Minimum sound transmission rating of installed panel partition to be intended STC rating, tested to ASTM E90.

.2 Fire rated gypsum board assemblies to meet ULC Design No. W453 as shown on contract Drawings.

1.5 QUALITY ASSURANCE

.1 Qualifications: Execute the Work of this Section by skilled, qualified, and experienced workers trained in the installation of the Work of this Section.

1.6 DELIVERY, STORAGE AND HANDLING

.1 Deliver, store and handle materials in accordance with Section 01 61 00 and with manufacturer's written instructions.

.2 Delivery and Acceptance Requirements: deliver materials to site in original factory packaging, labelled with manufacturer's name and address.

.3 Storage and Handling Requirements:
.1 Store gypsum board assemblies materials level in dry location and in accordance with manufacturer's recommendations in clean, dry, well-ventilated area.
.2 Store and protect gypsum board assemblies from nicks, scratches, and blemishes.
.3 Protect from weather, elements and damage from construction operations.
.4 Handle gypsum boards to prevent damage to edges, ends or surfaces.

1.6 DELIVERY, STORAGE AND HANDLING (Cont'd)

.3 Storage and Handling Requirements:(Cont'd)
.5 Replace defective or damaged materials with new.

.4 Packaging Waste Management: remove for reuse of pallets, crates, padding and packaging materials as specified in accordance with Section 01 74 20.

1.7 AMBIENT CONDITIONS

.1 Maintain temperature 10 degrees C minimum, 21 degrees C maximum for 48 hours prior to and during application of gypsum boards and joint treatment, and for 48 hours minimumafter completion of joint treatment.

.2 Apply board and joint treatment to dry, frost free surfaces.

.3 Ventilation: ventilate building spaces as required to remove excess moisture that would prevent drying of joint treatment material immediately after its application.

PART 2 - PRODUCTS

2.1 MATERIALS

.1 Mold resistant and Type X gypsum board: to ASTM C1396/C1396M, regular, 15.9 mm thick, Type X, with mold resistant core, 1200 mm wide x maximum practical length, ends square cut, edges bevelled, paper or fibreglass mat faced.

.2 Metal furring runners, hangers, tie wires, inserts, anchors: to ASTM C645.

.3 Drywall furring channels: to ASTM C645, 0.5 mm core thickness galvanized steel channels for screw attachment of gypsum board.

.4 Resilient drywall furring: to ASTM C645, 0.5 mm base steel thickness galvanized steel for resilient attachment of gypsum board.

.5 Steel drill screws: to ASTM C1002.

.6 Laminating compound: as recommended by manufacturer, asbestos-free.

2.1 MATERIALS (Cont'd)

.7 Casing beads, corner beads, control joints and edge trim: to ASTM C1047, zinc-coated by hot-dip process, 0.5 mm base thickness, perforated flanges, one piece length per location.

.8 Sealants: in accordance with Section 07 90 00.
.1 Typical and acoustic sealant: in accordance with Section 07 90 00.

.9 Polyethylene: to CAN/CGSB-51.34, Type 2.

.10 Joint compound: to ASTM C475/C475M, asbestos-free.

.11 Joint tape: to ASTM C475/C475M.
.1 Paper or fibreglass mat joint tape as recommended by board manufacturer to suit mold resistant board.

.12 Access doors: Supplied by other Sections for installation as part of the Work of this Section.

PART 3 - EXECUTION

3.1 EXAMINATION

.1 Verification of Conditions: verify conditions of substrates previously installed under other Sections or Contracts are acceptable for gypsum board assemblies installation in accordance with manufacturer's written instructions.
.1 Visually inspect substrate in presence of Departmental Representative.
.2 Inform Departmental Representative of unacceptable conditions immediately upon discovery.
.3 Proceed with installation only after unacceptable conditions have been remedied.

3.2 ERECTION

.1 Do application and finishing of gypsum board to ASTM C840 except where specified otherwise.

.2 Erect hangers and runner channels for suspended gypsum board ceilings to ASTM C840 except where specified otherwise.

3.2 ERECTION (Cont'd)

.3 Support light fixtures by providing additional ceiling suspension hangers within 150 mm of each corner and at maximum 600 mm around perimeter of fixture.

.4 Install work level to tolerance of 1:1200.

.5 Frame with furring channels, perimeter of openings for access panels, light fixtures, diffusers, and grilles.

.6 Install furring channels parallel to, and at exact locations of steel stud partition header track.

.7 Furr for gypsum board faced vertical bulkheads within and at termination of ceilings.

.8 Furr above suspended ceilings for gypsum board fire and sound stops and to form plenum areas as indicated.

.9 Install wall furring for gypsum board wall finishes to ASTM C840, except where specified otherwise.

.10 Furr openings and around built-in equipment, cabinets, access panels, on four sides. Extend furring into reveals. Check clearances with equipment suppliers.

.11 Furr duct shafts, beams, columns, pipes and exposed services where indicated.

.12 Erect drywall resilient furring transversely across studs, spaced maximum 600 mm on centre and not more than 150 mm from ceiling/wall juncture. Secure to each support with drywall screw.

.13 Install continuous strip of gypsum board along base of partitions where resilient furring installed.

3.3 APPLICATION

.1 Apply gypsum board after bucks, anchors, blocking, sound attenuation, electrical and mechanical work have been approved.

.2 Apply single or double layer gypsum board to metal furring or framing using screw fasteners

3.3 APPLICATION (Cont'd)

.2 (Cont'd)
for single layer application and screw fastener for first layer and laminating adhesive for second layer in double layer application. Maximum spacing of screws 300 mm o.c.

.1 Single-Layer Application:

.1 Apply gypsum board on ceilings prior to application of walls to ASTM C840.

.2 Apply gypsum board vertically or horizontally, providing sheet lengths that will minimize end joints.

.2 Double-Layer Application:

.1 Install gypsum board for base layer and exposed gypsum board for face layer.

.2 Apply base layer to ceilings prior to base layer application on walls; apply face layers in same sequence. Offset joints between layers at least 250 mm.

.3 Apply base layers at right angles to supports unless otherwise indicated.

.4 Apply base layer on walls and face layers vertically with joints of base layer over supports and face layer joints offset at least 250 mm with base layer joints.

.3 Apply gypsum board to concrete or concrete block surfaces, where indicated, using laminating adhesive.

.1 Comply with gypsum board manufacturer's recommendations.

.2 Brace or fasten gypsum board until fastening adhesive has set.

.3 Mechanically fasten gypsum board at top and bottom of each sheet.

.4 Apply 12 mm diameter bead of acoustic sealant continuously around periphery of each face of partitioning to seal gypsum board/structure junction where partitions abut fixed building components. Seal full perimeter of cut-outs around electrical boxes and ducts, in partitions where perimeter sealed with acoustic sealant.

.5 Apply board using laminating adhesive on base layer of gypsum board for adhering of second layer in double layer application.

3.3 APPLICATION (Cont'd)

.6 Install ceiling boards in direction that will minimize number of end-butt joints. Stagger end joints at least 250 mm.

.7 Install gypsum board on walls vertically to avoid end-butt joints. At high walls, install boards horizontally with end joints staggered over studs, except where local codes or fire-rated assemblies require vertical application.

.8 Install gypsum board with face side out.

.9 Do not install damaged or damp boards.

.10 Locate edge or end joints over supports. Stagger vertical joints over different studs on opposite sides of wall.

3.4 INSTALLATION

.1 Erect accessories straight, plumb or level, rigid and at proper plane. Use full length pieces where practical. Make joints tight, accurately aligned and rigidly secured. Mitre and fit corners accurately, free from rough edges. Secure at 150 mm on centre using contact adhesive for full length.

.2 Install casing beads around perimeter of suspended ceilings.

.3 Install casing beads where gypsum board butts against surfaces having no trim concealing junction and where indicated. Seal joints with sealant.

.4 Construct control joints of preformed units or two back-to-back casing beads set in gypsum board facing and supported independently on both sides of joint.

.5 Provide continuous polyethylene dust barrier behind and across control joints.

.6 Locate control joints at changes in substrate construction and at approximate 15 m spacing on ceilings.

.7 Install control joints straight and true.

.8 Splice corners and intersections together and secure to each member with 3 screws.

3.4 INSTALLATION (Cont'd)

.9 Install access doors to electrical and mechanical fixtures specified in respective sections.
.1 Rigidly secure frames to furring or framing systems.

.10 Finish face panel joints and internal angles with joint system consisting of joint compound, joint tape and taping compound installed according to manufacturer's directions and feathered out onto panel faces.

.11 Gypsum Board Finish: finish gypsum board walls and ceilings to following levels in accordance with AWCI Levels of Gypsum Board Finish:
.1 Levels of finish:
.1 Level 4: embed tape for joints and interior angles in joint compound and apply three separate coats of joint compound over joints, angles, fastener heads and accessories; surfaces smooth and free of tool marks and ridges.

.12 Finish corner beads, control joints and trim as required with two coats of joint compound and one coat of taping compound, feathered out onto panel faces.

.13 Fill screw head depressions with joint and taping compounds to bring flush with adjacent surface of gypsum board so as to be invisible after surface finish is completed.

.14 Sand lightly to remove burred edges and other imperfections. Avoid sanding adjacent surface of board.

.15 Completed installation to be smooth, level or plumb, free from waves and other defects and ready for surface finish.

3.5 WORK IN EXISTING AREAS

.1 In existing areas, where existing gypsum board work has been demolished and/or damaged and repair work is required, provide new gypsum board finish.

.2 Thoroughly prepare areas to be repaired. Provide neat, clean and straight cuts.

3.5 WORK IN EXISTING AREAS (Cont'd)

.3 Finish all repair work as specified for new work.

.4 In existing areas where existing openings are to be filled in with gypsum board, provide new gypsum board wall and ceiling construction. Ensure new board faces are flush with faces of abutting existing walls and ceilings.

3.6 CLEANING

.1 Progress Cleaning: clean in accordance with Section 01 74 11.
.1 Leave Work area clean at end of each day.
.2 Final Cleaning: upon completion remove surplus materials, rubbish, tools and equipment in accordance with Section 01 74 11.

.2 Waste Management: separate waste materials for reuse and recycling in accordance with Section 01 74 20.
.1 Remove recycling containers and bins from site and dispose of materials at appropriate facility.

3.7 PROTECTION

.1 Protect installed products and components from damage during construction.

.2 Repair damage to adjacent materials caused by gypsum board assemblies installation.

END

PART 1 - GENERAL

1.1 REFERENCES

.1 ASTM International

.1 ASTM A653/A653M-13, Standard Specification for Steel Sheet, Zinc-Coated (Galvanized) or Zinc-Iron Alloy-Coated (Galvannealed) by the Hot-Dip Process.

.2 ASTM C645-14, Standard Specification for Nonstructural Steel Framing Members.

.3 ASTM C754-11, Standard Specification for Installation of Steel Framing Members to Receive Screw-Attached Gypsum Panel Products.

.4 ASTM E90-09, Standard Test Method for Laboratory Measurement of Airborne Sound Transmission Loss of Building Partitions and Elements.

1.2 DESIGN REQUIREMENTS

.1 Partition assembly to be fire resistance rated where indicated and required.

.2 Minimum sound transmission rating of installed panel partition to be desired STC rating, tested to ASTM E90.

.3 Design ceiling suspension system in accordance with manufacturer's printed directions and ASTM C754.

.4 Design ceiling system for adequate support of electrical fixtures as required by the current bulletin of the Electrical Safety Authority.

.5 Design hanger anchor and entire suspension system static loading not to exceed 25% of their ultimate capacity.

.6 Design suspension system to support weight of mechanical and electrical items such as air handling boots and lighting fixtures, and with adequate support to allow rotation/relocation of light fixtures. Coordinate with applicable Sections as required for this Work.

.7 Design subframing as necessary to accommodate, and to circumvent, conflicts and interferences where ducts or other equipment prevent the regular spacing of hangers.

1.2 DESIGN REQUIREMENTS (Cont'd)

.8 Design steel stud framing system for wall assemblies with a height greater than 3000 mm and structural stud applications.

1.3 ACTION AND INFORMATIONAL SUBMITTALS

.1 Submit in accordance with Section 01 33 00.

.2 Product Data:
.1 Submit manufacturer's instructions, printed product literature and data sheets for metal framing and include product characteristics, performance criteria, physical size, finish and limitations.

.3 Shop Drawings: Submit shop drawings indicating wall assemblies, suspension systems, adjacent construction, elevations, sections and details, dimensions, thickness, finishes and relationship to adjacent construction.

1.4 QUALITY ASSURANCE

.1 Retain a Professional Engineer, licensed in Province of Ontario, with experience in Work of comparable complexity and scope, to perform following services as part of Work of this Section:
.1 Design of suspended gypsum board assemblies.
.2 Design of wall systems with height greater than 3000 mm and structural stud applications.
.3 Review, stamp, and sign shop drawings and design calculations.
.4 Conduct shop and on-site inspections, prepare and submit written inspection reports verifying that this part of Work is in accordance with Contract Documents and reviewed shop drawings.

.2 Qualifications: Execute the Work of this Section by skilled, qualified, and experienced workers trained in the installation of the Work of this Section.

.3 Test Reports: submit certified test reports showing compliance with specified performance characteristics and physical properties.

1.4 QUALITY ASSURANCE (Cont'd)

.4 Certificates: submit product certificates signed by manufacturer certifying materials comply with specified performance characteristics and criteria and physical requirements.

.5 Pre-Installation Meetings: conduct pre-installation meeting to verify project requirements, manufacturer's installation instructions and manufacturer's warranty requirements. Comply with Section 01 31 19.

1.5 DELIVERY, STORAGE AND HANDLING

.1 Deliver, store and handle materials in accordance with Section 01 61 00 and with manufacturer's written instructions.

.2 Delivery and Acceptance Requirements: deliver materials to site in original factory packaging, labelled with manufacturer's name and address.

.3 Storage and Handling Requirements:
.1 Store materials in dry location and in accordance with manufacturer's recommendations in clean, dry, well-ventilated area.
.2 Store and protect metal framing from nicks, scratches, and blemishes.
.3 Replace defective or damaged materials with new.

.4 Packaging Waste Management: remove for reuse of pallets, crates, padding, and packaging materials as specified in accordance with Section 01 74 20.

PART 2 - PRODUCTS

2.1 MATERIALS

.1 Stud framing: to ASTM C645, stud size as indicated on Contract Drawings, roll formed from 0.53 mm thickness hot dipped galvanized steel sheet for typical non-structural framing applications and 0.91 mm for structural studs and studs greater than 3000 mm in height, for screw attachment of gypsum board.
.1 Knock-out service holes at 460 mm centres.

2.1 MATERIALS (Cont'd)

.2 Floor and ceiling tracks: to ASTM C645, in widths to suit stud sizes, 32 mm flange height.

.3 Metal channel stiffener: 1.4 mm thick cold rolled steel, coated with rust inhibitive coating.

.4 Sheet steel blocking: Galvanized sheet steel: ASTM A653/A653M Grade A, Z275 Commercial Quality zinc coating. 0.91 mm thick (20 ga.) thick for use as sheet blocking. For use at lab shelving and fume hood locations where indicated.

.5 Acoustic insulation: mineral fibre batt, 40 kg/m^3, Ecologo certified.

.6 Acoustical sealant: In accordance with Section 07 90 00.

PART 3 - EXECUTION

3.1 EXAMINATION

.1 Verification of Conditions: verify that conditions of substrate previously installed under other Sections or Contracts are acceptable for non-structural metal framing application in accordance with manufacturer's written instructions.
.1 Visually inspect substrate in presence of Departmental Representative.
.2 Inform Departmental Representative of unacceptable conditions immediately upon discovery.
.3 Proceed with installation only after unacceptable conditions have been remedied.

3.2 ERECTION

.1 Align partition tracks at floor and ceiling and secure at 600 mm on centre maximum.

.2 Place studs vertically at 400 mm on centre and not more than 50 mm from abutting walls, and at each side of openings and corners.
.1 Position studs in tracks at floor and ceiling. Cross brace steel studs as required to provide rigid installation to manufacturer's instructions.

3.2 ERECTION (Cont'd)

.3 Erect metal studding to tolerance of 1:1000.

.4 Provide 20 ga. thick galvanized sheet blocking for locations as indicated on Contract Drawings.

.5 Attach studs to bottom and ceiling track using screws.

.6 Coordinate simultaneous erection of studs with installation of service lines. When erecting studs ensure web openings are aligned.

.7 Coordinate erection of studs with installation of door frames and special supports or anchorage for work specified in other Sections.

.8 Provide two studs extending from floor to ceiling at each side of openings wider than stud centres specified.
.1 Secure studs together, 50 mm apart using column clips or other approved means of fastening placed alongside frame anchor clips.

.9 Install heavy gauge single jamb studs at openings.

.10 Erect track at head of door/window openings and sills of sidelight/window openings to accommodate intermediate studs.
.1 Secure track to studs at each end, in accordance with manufacturer's instructions.
.2 Install intermediate studs above and below openings in same manner and spacing as wall studs.

.11 Frame openings and around built-in equipment, cabinets, access panels, on four sides. Extend framing into reveals. Check clearances with equipment suppliers.

.12 Provide 40 mm stud or furring channel secured between studs for attachment of fixtures as required.

.13 Install steel studs or furring channel between studs for attaching electrical and other boxes.

.14 Extend partitions to ceiling height except where noted otherwise on drawings.

3.2 ERECTION (Cont'd)

.15 Maintain clearance under beams and structural slabs to avoid transmission of structural loads to studs.
.1 Use 50 mm leg ceiling tracks or use double track slip joint.

.16 Install two continuous beads of acoustical sealant under studs and tracks around perimeter of sound control partitions.

.17 Between framing acoustic insulation:
.1 Apply batt insulation between framing members tight to friction fit.
.2 Fit batt insulation tight to projections through insulation and adjoining insulation.

3.3 CLEANING

.1 Progress Cleaning: clean in accordance with Section 01 74 11 - Cleaning.
.1 Leave Work area clean at end of each day.

.2 Final Cleaning: upon completion remove surplus materials, rubbish, tools and equipment in accordance with Section 01 74 11.

.3 Waste Management: separate waste materials for reuse and recycling in accordance with Section 01 74 20.
.1 Remove recycling containers and bins from site and dispose of materials at appropriate facility.

3.4 PROTECTION

.1 Protect installed products and components from damage during construction.

.2 Repair damage to adjacent materials caused by non-structural metal framing application.

END

PART 1 - GENERAL

1.1 RELATED SECTIONS

.1 Section 02 41 23: Salvaged wall tiles.

1.2 REFERENCE STANDARDS

.1 American National Standards (ANSI) for the Installation of Ceramic Tile/ Ceramic Tile Institute of America (CTIOA):

.1 ANSI A108/A118/A136.1-2013, Installation of Ceramic Tile.

.1 ANSI A108.1A, Installation of Ceramic Tile in Wet-Set Method, with Portland Cement Mortar.

.2 ANSI A108.1B, Installation of Ceramic Tile on a Cured Portland Cement Mortar Setting Bed with Dry-Set or Latex Portland Cement Mortar.

.3 ANSI A108.1C, Contractors Option: Installation of Ceramic Tile in the Wet-Set Method with Portland Cement Mortar or Installation of Ceramic Tile on a Cured Portland Cement Mortar Bed with Dry-Set or Latex Portland Cement Mortar.

.4 ANSI A108.4, Installation of Ceramic Tile with Organic Adhesives or Water Cleanable Tile Setting Epoxy Adhesive.

.5 ANSI A108.5, Installation of Ceramic Tile with Dry-Set Portland Cement Mortar or Latex-Portland Cement Mortar.

.6 ANSI A108.6, Installation of Ceramic Tile with Chemical Resistant, Water Cleanable Tile-Setting and Grouting Epoxy.

.7 ANSI A108.8, Installation of Ceramic Tile with Chemical Resistant Furan Mortar and Grout.

.8 ANSI A108.9, Installation of Ceramic Tile with Modified Epoxy Emulsion Mortar/Grout.

.9 ANSI A108.10, Installation of Grout in Tilework.

.10 ANSI A108.11, Interior Installation of Cementitious Backer Units.

.11 ANSI A118.1, Dry-Set Portland Cement Mortar.

.12 ANSI A118.3, Chemical Resistant Water Cleanable Tile-Setting and Grouting

1.2 REFERENCE STANDARDS (Cont'd)

.1 (Cont'd)
.1 (Cont'd)
.12 (Cont'd)
Epoxy and Water cleanable tile Setting Epoxy Adhesive.
.13 ANSI A118.4, Latex Portland Cement Mortar.
.14 ANSI A118.5, Chemical Resistant Furan Mortars and Grouts For Tile Installation.
.15 ANSI A118.6, Ceramic Tile Grouts.
.16 ANSI A118.8, Modified Epoxy Emulsion Mortar Grout.
.17 ANSI A118.9, Cementitious Backer Units.
.18 ANSI A136.1, Organic Adhesives for Installation of Ceramic Tile.

.2 International Standards Organization (ISO):
.1 ISO 13007- Part 1: 2014: Ceramic tiles -- Grouts and adhesives; performance requirements for tile adhesives.
.2 ISO 13007- Part 2: 2010: Ceramic tiles -- Grouts and adhesives; test methods for adhesives.
.3 ISO 13007- Part 3: 2010: Ceramic tiles -- Grouts and adhesives; terms, definitions and specifications for grouts.
.4 ISO 13007- Part 4: 2013: Ceramic tiles -- Grouts and adhesives; Test methods for grouts.

.3 American Society for Testing and Materials International (ASTM)
.1 ASTM C207-06(2011), Standard Specification for Hydrated Lime for Masonry Purposes.

.4 Canadian Standards Association (CSA International)
.1 CAN/CSA-A3000-13, Cementitious Materials Compendium (Consists of A3001, A3002, A3003, A3004 and A3005).
.2 CAN/CSA-A179-14, Mortar and Grout for Unit Masonry.

.5 Terrazzo Tile and Marble Association of Canada (TTMAC) 1-800-201-8599, 905-660-9640, www.ttmac.com.
.1 Hard Surface Maintenance Guide.
.2 TTMAC Specification Guide 09 30 00 - Tile Installation Manual 2012/2014.

1.3 SUBMITTALS

.1 Submit TTMAC Installation Detail No. or Tile Council of America Installation Detail No. or shop drawing showing installation for each tile specified.

1.4 QUALIFICATIONS

.1 Use installation and grouting materials produced by a manufacturer that has been regularly engaged in producing these materials for a minimum of 10 years and has completed a minimum of 5 successful installations of this type, each at least five years old.

.2 Employ workmen with previous experience of more than 5 years in each different assembly specified.

.3 Provide references of 3 installations of similar type and size more than 3 years old for each assembly.

PART 2 - PRODUCTS

2.1 MATERIAL

.1 Ceramic wall tile: Salvaged tile supplied under Work of Section 02 41 23.

.2 Portland cement: to CAN/CSA-A3001, type GU Normal, white at grout.

.3 Sand: to CSA A179.

.4 Hydrated Lime: to ASTM C207.

.5 Latex: formulated for use in cement mortar.

.6 Water: potable.

.7 Thin set bond coat (interior): dry set mortar, pre-mixed, thin set mortar formulated with Portland cement, sand and latex additive. Complying with ANSI A118.4 and ISO 13007.

.8 Wall grout (thin set system): pre-mixed, dry set grout. Colour to match tile colour.

.9 Edge trims: Aluminum edge with satin anodized finish, continuous at all exposed tile edges, depth as required to suit tile thickness.

PART 3 - EXECUTION

3.1 SURFACE PREPARATION

.1 Do not proceed with installation unless substrate is structurally sound, solid and well fastened.

.2 Surfaces must be clean and free from dust, dirt, oil, grease, paint, wax, sealers, curing compounds or any other substances which may reduce or prevent adhesion.

3.2 SYSTEM REQUIREMENTS

.1 Provide assemblies composed of compatible materials from the same manufacturer.

.2 The completed assembly will meet the service requrements Heavy Duty described in Handbook For Ceramic Tile Installation.

3.3 MIXING

.1 To ANSI A108.1A.

.2 Levelling coat (by volume):
.1 1 part portland cement.
.2 4 parts sand.
.3 1/10 part latex.
.4 1 part water (includes latex additive).
.5 Adjust water volume to suit water content of sand.

.3 Scratch coat (by volume):
.1 1 part portland cement.
.2 1/5 to 1/2 parts hydrated lime.
.3 4 parts sand.
.4 1 part water.
.5 Adjust water volume to suit water content of sand.
.6 Latex, volume recommended by manufacturer.

.4 Slurry bond coat:
.1 Portland cement and water Mix to creamy paste consistency.
.2 Latex, volume recommended by manufacturer.

.5 Wall, mortar bed (by volume):
.1 1 part portland cement.
.2 1/5 to 1/2 parts hydrated lime.

3.3 MIXING (Cont'd)

.5 Wall, mortar bed (by volume):(Cont'd)
.3 4 parts sand.
.4 1 part water.
.5 Adjust water volume to suit water content of sand.
.6 Latex, volume recommended by manufacturer.

.6 Portland cement Bond coat and grout (by volume):
.1 1 part portland cement white at grout.
.2 1/3 part hydrated lime.
.3 1 part water.

.7 Thin set bond coat and grout: dry set mortar; mix to manufacturer's instructions.

3.4 WORKMANSHIP

.1 Minimum surface and air temperature 12°C, before and during application and during curing period.

.2 Provide back-buttering in addition to the usual notch-trowel-applied bond coat in the following applications:
.1 With rib-backed tiles and heavy lug-backed tiles.
.2 In hot, dry or windy weather or where motched mortar bed was prepared too far in advance.

.3 Backbuttering: remove residual dust, wipe the back of the tile with a damp cloth or sponge, apply a full coverage 2 mm thick coat of mortar, apply no more than 10-15 minutes before tiles are set so that both back-butter and mortar are wet at time of setting.

.4 Use Box Screed jig with large sized tiles which are not of uniform thickness.

.5 Trowel in one direction and press the tile into the mortar with a sliding motion perpendicular to the trowel ridges. Twist, vibrate or beat the tiles to compress the trowel ridges to comply with requirements of ANSI A108.5.

.6 Perimeter tile minimum 1/2 size.

.7 Cut tile around corners and built-in objects smooth, even, chip and split free.

3.4 WORKMANSHIP (Cont'd)

.8 Accurately form intersections, corners and returns.

.9 Joints uniform:
.1 Walls: 1.5-3.0 mm wide.

.10 Surfaces plumb, straight, true, even and flush to a tolerance of 1:1000.

.11 Replace broken or hollow sounding tile.

.12 Allow 24 hours before grouting.

.13 Fill joints solid with grout, free of voids, cracks, excess mortar or grout.

.14 Clean surfaces after curing.

3.5 SETTING BACK-BUTTERED TILE

.1 Firmly push, twist and immediately beat or vibrate the tiles or stone units.

3.6 WALL TILE

.1 Install in accordance with:
.1 TTMAC details 303W, Tile Installed Over Masonry or Concrete Walls - Thin Set Method Interior/Exterior.
.2 Bond coat and grout manufacturer's written instructions.

3.7 EXPANSION AND CONTROL JOINTS

.1 Install movement joints in accordance with TTMAC detail 301MJ, applicable details and in accordance with joint manufacturer's recommendations and as follows:
.1 Interior: 4.8 m to 6 m each direction.
.2 Interior exposed to sunlight or moisture: 3.659 m to 4.878 m in both directions.
.3 Where tile abutts restraining surfaces (walls, pipes, ceilings and where changes occur in backing materials).

.2 Provide expansion joints where tile spans cold joints, construction joints, saw-cuts and seismic joints.

.3 Construct during installation of mortar beds and/or tile, rather than saw-cutting joints after installation.

3.8 CLEANING

.1 Clean off excess grout with soft burlap or sponge moistened with clean water.

.2 Polish wall tile after grout has cured in accordance with TTMAC recommendations in the Maintenance Guide; do not use acid for cleaning.

.3 Re-point joints after cleaning as required to eliminate imperfections, then re-clean as necessary. Avoid scratching tile surfaces.

3.9 PROTECTION

.1 Protect tiled assemblies after final installation.

.2 Prevent direct impact, vibration and heavy hammering on adjacent and opposite walls for 24 hours minimum, after final installation.

.3 Cover work temporarily with building paper properly lapped and taped at joints until work has been approved by Departmental Representative.

END

PART 1 - GENERAL

1.1 REFERENCES

.1 American Society for Testing and Materials (ASTM)
.1 ASTM C635/C635M-13a, Specification for the Manufacture, Performance, and Testing of Metal Suspension Systems for Acoustical Tile and Lay-in Panel Ceilings.
.2 ASTM C636/C636M-13, Standard Practice for Installation of Metal Ceiling Suspension Systems for Acoustical Tile and Lay-In Panels.
.3 ASTM E1264-08e1, Classification for Acoustical Ceiling Products.

.2 Underwriters Laboratories Canada (ULC)
.1 CAN/ULC S102-10, Standard Method of Test for Surface Burning Characteristics of Building Materials and Assemblies.

1.2 DESIGN REQUIREMENTS

.1 Design ceiling suspension systems in accordance with ASTM C636/C636M and manufacturer's printed directions.

.2 Design tile ceiling system for adequate support of electrical fixtures as required by the current bulletin of the Electrical Safety Authority. Acoustic panel system is not designed to carry the weight of electrical equipment.

.3 Design hanger anchor and entire suspension system static loading not to exceed 25% of their ultimate capacity including lighting fixture dead loads.

.4 Design tile suspension system to support weight of mechanical and electrical items such as air handling boots and lighting fixtures, and with adequate support to allow rotation/relocation of light fixtures. Acoustic panel system is not designed to carry the weight of mechanical and electrical equipment.

.5 Design subframing as necessary to accommodate, to avoid conflicts and interferences where ducts or equipment prevent regular spacing of hangers.

1.3 ACTION AND INFORMATIONAL SUBMITTALS

.1 Submit submittals in accordance with Section 01 33 00.

.2 Product Data:
.1 Submit manufacturer's instructions, printed product literature and data sheets for acoustical suspension and include product characteristics, performance criteria, physical size, finish and limitations.

.3 Shop drawings:
.1 Submit drawings stamped and signed by Professional Engineer registered or licensed in Province of Ontario, Canada.
.2 Submit reflected ceiling plans for special grid patterns as indicated.
.3 Indicate lay-out, insert and hanger spacing and fastening details, access door dimensions, and locations and acoustical unit support at ceiling fixture.

.4 Samples:
.1 One full-size sample of each type of tile panels to be used.
.2 One of each type of suspension system members.

.5 Certificates: Submit certificate stating that suspended ceiling systems provide adequate support for electrical fixtures, as required by current bulletin of Electrical Inspection Department of Ontario Hydro.

.6 Closeout submittals:
.1 Operation and Maintenance Data: submit operation and maintenance data for acoustical suspension for incorporation into manual.

1.4 DELIVERY, STORAGE AND HANDLING

.1 Deliver, store and handle materials in accordance with Section 01 61 00 and with manufacturer's written instructions.

.2 Delivery and Acceptance Requirements: deliver materials to site in original factory packaging, labelled with manufacturer's name and address.

.3 Storage and Handling Requirements:
.1 Store materials in dry location and in accordance with manufacturer's recommendations in clean, dry, well-ventilated area.

1.4 DELIVERY, STORAGE AND HANDLING (Cont'd)

.3 Storage and Handling Requirements:(Cont'd)
.2 Store and protect acoustical ceiling tiles and tracks from nicks, scratches, and blemishes.
.3 Replace defective or damaged materials with new.

.4 Packaging Waste Management: remove for reuse and return of pallets, crates, padding and packaging materials.

1.5 EXTRA MATERIALS

.1 Provide extra materials of acoustic units in accordance with Section 01 78 00.

.2 Provide acoustical units amounting to 2% of gross ceiling area for each pattern and type required for project.

.3 Extra materials to be from same production run as installed materials.

.4 Clearly identify each type of acoustic unit, including colour and texture.

.5 Deliver to Departmental Representative, upon completion of the work of this section.

.6 Store where directed by Departmental Representative.

PART 2 - PRODUCTS

2.1 MATERIALS

.1 Intermediate and heavy duty system to ASTM C635/C635M as required to support intended loads.

.2 Acoustic ceiling tile - existing (ACT):
.1 Conforming to ASTM E1264.
.2 Mineral fibre, flat, square edge, white colour, fissured pattern, maximum flame spread rating 25 to CAN/ULC-S102, STC minimum 35, to match existing in all respects.

.3 Acoustic ceiling tile - salvaged: Existing acoustic tile salvaged under work of Section 02 41 23. Coordinate with noted Section as required for the supply of salvaged tiles.

2.1 MATERIALS (Cont'd)

.4 Vinyl faced ceiling tile - new (VFC):
.1 Conforming to ASTM E1264, Type IV, Form 2, Pattern E.
.2 Mineral fibre tile with vinyl faced membrane in white colour, sized at 610 x 1220 x 16 mm thick, flat, square edge, accessories as recommended by panel manufacturer, non-perforated, chemical and moisture resistant.

.5 Vinyl faced ceiling tile - existing (VFU): Conforming to ASTM E1264, to match existing type in all respects.

.6 Suspension system: non-fire rated, two directional exposed tee bar grid, including wall moulding.

.7 Exposed tee bar grid components for ACU: cold rolled steel, zinc coated, shop painted, satin sheen, white, interlocking, main and cross tee of double web with rectangular bulb, depth governed by span, 25 mm exposed face.

.8 Exposed tee bar grid components for VFC: co-extruded aluminum 3005 alloy with white PVC finish, gasketed, staked on clip, integral cross tee hook, 23.8 mm exposed face.

.9 Hangers: 3.6 mm galvanized soft annealed steel wire.

.10 Accessories: splices, clips, wire ties, retainers and wall moulding flush, to complement suspension system components, as recommended by system manufacturer.

.11 Retroclip: 0.9 mm thick (20 gauge) steel clip for attaching cross Tees to main tees after the cross tee tongue has been removed.

PART 3 - EXECUTION

3.1 EXAMINATION

.1 Verification of Conditions: verify conditions of substrates previously installed under other Sections or Contracts are acceptable for acoustical ceiling tile and track installation in accordance with manufacturer's written instructions.
.1 Visually inspect substrate in presence of Departmental Representative.
.2 Inform Departmental Representative of unacceptable conditions immediately upon discovery.
.3 Proceed with installation only after unacceptable conditions have been remedied.

3.2 INSTALLATION

.1 Install acoustical ceilings in accordance with ASTM C636/C636M, reviewed shop drawings and manufacturer's written instructions.

.2 Install suspension system to manufacturer's instructions and Certification Organizations tested design requirements.

.3 Make modifications to existing components as required to suit new layout. Leave re-installed work neat and clean.

.4 Co-ordinate suspension system with related components.

.5 Do not erect ceiling suspension system until work above ceiling has been inspected and approved by Departmental Representative.

.6 Support suspension system main runners at 1200 mm oc maximum with hangers from structure. Assembly shall support super-imposed loads. Maximum permissible deflection, 1/360th of span to ASTM C635/C635M deflection test.

.7 Attach cross member to main runner to provide rigid assembly.

.8 Acoustic lay-in tiles:
.1 Install acoustic tiles in grid system openings supported by bottom flanges of members. Provide special shapes and sizes to

3.2 INSTALLATION (Cont'd)

.8 Acoustic lay-in tiles:(Cont'd)
.1 (Cont'd)
provide a complete installation by cutting tile to fit into openings. Fit tile moderately tight between upright legs of members.
.2 Carefully cut and trim acoustic tiles to accommodate items piercing the finished ceiling plane.
.3 Cut acoustic units to fit adjacent work. Butt joints tight, terminate edges with moulding.

.9 Install flush edge moulding at junction of acoustic unit ceiling and other materials around entire length of joint.

3.3 INTERFACE WITH OTHER WORK

.1 Co-ordinate ceiling work to accommodate components of other sections, such as light fixtures, diffusers, speakers, sprinkler heads, to be built into acoustical ceiling components.

3.4 CLEANING

.1 Cleaning:
.1 Leave Work area clean at end of each day.
.2 Upon completion remove surplus materials, rubbish, tools and equipment.
.3 Touch up scratches, abrasions, voids and other defects in painted surfaces.

.2 Waste Management: separate waste materials for reuse and recycling in accordance with Section 01 74 20.
.1 Remove recycling containers and bins from site and dispose of materials at appropriate facility.

3.5 PROTECTION

.1 Protect installed products and components from damage during construction.

.2 Repair damage to adjacent materials caused by acoustical suspension installation.

PART 1 - GENERAL

1.1 REFERENCES

.1 ASTM International.
.1 ASTM D2047-11, Standard Test Method for Static Coefficient of Friction or Polish-Coated Flooring Surfaces as Measured by the James Machine.
.1 ASTM F710-11, Standard Practice for Preparing Concrete Floors to Receive Resilient Flooring.
.2 ASTM F1516-13, Standard Practice for Sealing Seams of Resilient Floor Products by the Heat Weld Method.
.3 ASTM F1861-08(2012)e1, Standard Specification for Resilient Wall Base.
.4 ASTM F1869-11, Standard Test Method for Measuring Moisture Vapor Emission Rate of Concrete Subfloor Using Anhydrous Calcium Chloride.
.5 ASTM F1913-04(2014), Standard Specification for Vinyl Sheet Floor Covering Without Backing.
.6 ASTM F2170-11, Standard Test Method for Determining Relative Humidity in Concrete Slabs Using in-situ Probes.

.2 Environmental Choice Program (ECP):
.1 ECP/PCE-44-92, Adhesives.

1.2 WHMIS

.1 Submit WHMIS MSDS - Material Safety Data Sheets acceptable to Labour Canada and Health Canada for primer, cement and adhesive. Indicate VOC content.

.2 Submit WHMIS MSDS in accordance with Sections 01 33 00 and 01 78 00.

1.3 MAINTENANCE DATA

.1 Provide maintenance data for resilient flooring for incorporation into operation and maintenance manual specified in Section 01 78 00.

1.4 SUBMITALS

.1 Submit a list of 6 projects (with contact people and phone numbers) completed within the previous 12 months which use the same systems specified here in accordance with Sections 01 33 00 and 01 78 00.

.2 Submit copy of flooring manufacturer's installation procedures in accordance with Sections 01 33 00 and 01 78 00.

.3 Submit copy of installer's certificate of competence granted by the linoleum manufacturer in accordance with Sections 01 33 00 and 01 78 00.

.4 Submit letter stating that the moisture content of concrete slab and the ph of the surface is within manufacturer's written guidelines for proposed flooring system.

.5 Do not proceed with flooring installation if the concrete slab moisture content is over 3.0 lbs/1000 S.F for vinyl or 3.5 lbs/1000 S.F. for linoleum. Contact the manufacturer's representative and inform the Departmental Representative immediately.

.6 Submit a cut diagram indicating seam locations and roll direction in accordance with Sections 01 33 00 and 01 78 00. Use mitred transitions when changing directions in layout unless approved otherwise.

1.5 SAMPLES

.1 Submit samples in accordance with Sections 01 33 00 and 01 78 00.

.2 Submit duplicate 300 x 300 mm sample pieces of sheet material and 300 mm long base.

1.6 MAINTENANCE MATERIALS

.1 Provide extra 5% or to nearest full roll of each colour, pattern and type of flooring material and bases required for maintenance use.

.2 Deliver to job site in boxes clearly marked with information on contents and include address and date of installation.

1.6 MAINTENANCE MATERIALS (Cont'd)

.3 Unload and store within building where directed by Departmental Representative.

1.7 ENVIRONMENTAL CHOICE PROGRAM

.1 Provide adhesive products bearing the 'Ecologo' of the Environmental Choice Program, Department of the Environment, Canadian Environmental Protection Act, Environmental Choice Product Guidelines ECP/PCE-44 for Adhesives.

.2 Submit one copy of the licensing criteria statements and the verification of compliance with Sections 3(a) and 3(b) of the ECP to the Departmental Representative.

PART 2 - PRODUCTS

2.1 MATERIALS

.1 Sheet vinyl: To ASTM F1913, Grade 1, 2.0 mm sheet vinyl flooring without backing. Static coefficient of slip resistance in excess of 0.5 when tested in accordance with ASTM D2047, bacteriostat, fungicidal, polyurethane surface with welding rod, cove stick, cove base cap.

.1 Chemical resistance: No detectable change in working surface material from:

.1 Acetic acid, 98%.
.2 Hydrochloric acid.
.3 Citric acid.
.4 Formic acid.
.5 Lactic acid.
.6 Nitric acid.
.7 Perchloric acid.
.8 Sulphuric acid.
.9 Trichloracetic acid.
.10 Ammonia.
.11 Caustic soda.
.12 Silver nitrate.
.13 K-Permanganate.
.14 Ethyl acetate.
.15 Aceto-nitril.
.16 Ether-Di ethyl oxyde.
.17 Heptane.
.18 Hexane.
.19 Amylic alcohol.
.20 Butylic alcohol - Butanol.
.21 Ethylic alcohol - Ethanol.

2.1 MATERIALS (Cont'd)

.1 Sheet vinyl:(Cont'd)

.1 Chemical resistance:(Cont'd)

.22 Isopropyl alcohol - Isopropanol.
.23 Methylic alcohol - Methanol.
.24 Methyl-2-propanol.
.25 2-Methyl-24-pentanediol.
.26 2-Propanol (isopropanol).
.27 Iodised alcohol.
.28 Starch.
.29 Azorubine.
.30 Betadine (water-based).
.31 Methylene blue.
.32 Chlorhexidine.
.33 Chloroform.
.34 Crystal violet.
.35 Hydrogen peroxide.
.36 Eosin (water-based).
.37 Formaldehyde.
.38 Formol (gaseous).
.39 Glemsa.
.40 Hibitane champ.
.41 Lugol.
.42 May-Grunwald.
.43 Merfen.
.44 Safranin (water-based).
.45 Safranin (Solvent).

.2 Salvaged resilient flooring: Existing resilient flooring salvaged under work of Section 02 41 23. Coordinate with noted Section as required for the supply of salvaged flooring to be used for any patching and repair work as required.

.3 Integral cove base:

.1 Provide integral cove base for resilient flooring where indicated.

.2 Cove fillers: As recommended by flooring manufacturer.

.3 End caps: Provide J-trim type stainless steel end caps for all cove bases, for adhesive installation.

.4 Resilient base: to ASTM F1861, Type TP rubber thermoplastic, Group 1 solid homegeneous, 100 mm high, continuous, Style B-coved, preformed inside and outside corners at coved base

.5 Primer, cement, band adhesive: type recommended by flooring and base manufacturer to suit substrate and installation, Ecologo certified.

2.1 MATERIALS (Cont'd)

.6 Resin welding rod: type recommended by flooring manufacturer.

.7 Sub-floor filler: premixed latex modified cement mixed with water to produce cementitious paste.

.8 Wax and sealer: type recommended by flooring manufacturer.

.9 Reducing strip: same material as flooring.

PART 3 - EXECUTION

3.1 SUB-FLOOR TREATMENT

.1 Remove ridges and bumps.

.2 Apply sub-floor filler to low spots and cracks to achieve floor level to a tolerance of 1:500, allow to cure.

.3 Remove dust, old adhesive, paint, dirt, wax, sealer and foreign matter from existing surfaces.

3.2 PREPARATION AND INSTALLATION

.1 Maintain room and material temperature at approximately 20°C for 3 days before laying, and minimum 2 days after laying.

.2 Ensure concrete floors meet the following minimum requirements and requirements of the flooring manufacturer. If there is a conflict between these requirements and those of the flooring manufacturer, the more stringent shall apply.
.1 Internal Relative Humidity Test: Perform internal relative humidity testing in accordance with ASTM F2170. Results shall not exceed 80% RH.
.2 Moisture Test: Moisture emissions from concrete subfloors (cured for a minimum of 28 days) must not exceed 3 lbs per 1000sf per 24 hours (1.4 kg H2O/24 hr/93 m2) for acrylic adhesive and 5lbs for polyurethane adhesive via the Calcium Chloride Test Method (ASTM F1869).
.3 The pH level of the subfloor surface shall not be higher than 9.9. If higher, subfloor must be neutralized.

3.2 PREPARATION AND INSTALLATION (Cont'd)

.3 Flooring shall be installed over subfloors conforming to ASTM F710 for concrete.

.4 Do not proceed with work until results of moisture condition tests are acceptable.

.5 Prepare floor and install flooring in accordance with flooring manufacturer's instructions.

.6 Lay sheet vinyl flooring with seams parallel to building lines. Run sheets in direction of traffic. Adhere sheet vinyl under the entire field of each sheet with adhesive and around the perimeter and underseams with cement. Weld seams.

.7 Heat weld seams in accordance with ASTM F1516 and manufacturer's printed instructions.

.8 Roll surface with 45 kg roller.

.9 Integral cove base: Provide 100 mm coved base at room perimeter and at built-in fitment locations complete with cove fillers and top caps as required. Form cove with 25 mm radius.

.10 Resilient base: Base joints at maximum length available or at internal or preformed corners.

.11 Install reducing strip at exposed edges, centre under doors at doorways.

3.3 WORK IN EXISTING BUILDING

.1 In areas of alteration work, re-install salvaged flooring to match existing and to the approval of the Departmental Representative. Thoroughly and properly prepare demolished areas prior to flooring application.

3.4 CLEANING AND WAXING

.1 Clean, seal and wax flooring to manufacturer's instructions.

END

PART 1 - GENERAL

1.1 RELATED SECTIONS

.1 Section 02 41 23: Salvaged carpet tiles.

1.2 REFERENCES

.1 Contract Carpet Manual, Canadian Carpet Institute, (613) 232-7183.

.2 Carpet and Rug Institute www.carpet-rug.org and Canadian Carpet Institute, www.canadiancarpet.org.
.1 CRI Carpet Installation Standard 2011.

.2 Environmental Choice Program (ECP):
.3 ECP/PCE-44-92, Adhesives.

1.3 PRODUCT DATA

.1 Submit product data sheet for adhesive, and Ecologo products in accordance with Sections 01 33 00 and 01 78 00.

.2 For adhesives, indicate VOC in g/L during application and curing.

1.4 SHOP DRAWINGS

.1 Submit shop drawings in accordance with Sections 01 33 00 and 01 78 00.

.2 Indicate nap, open edges and other details required by Departmental Representative to clarify work.

1.5 DESIGN DATA, TEST REPORTS, CERTIFICATES, MANUFACTURER'S INSTRUCTIONS AND FIELD REPORTS

.1 Submit evidence of prequalification compliance.

.2 Submit WHMIS MSDS - Material Safety Data Sheets acceptable to Labour Canada and Health Canada for carpet adhesive. Indicate VOC content.

1.6 ENVIRONMENTAL CHOICE PROGRAM

.1 Provide adhesive products bearing the 'Ecologo' of the Environmental Choice Program, Department of the Environment, Canadian Environmental Protection Act, Environmental Choice Product Guidelines ECP/PCE-44 for Adhesives.

1.7 QUALIFICATIONS

.1 Applied by installer trained and certified by carpet tile manufacturer for application of its products.

.2 Manufacturer's representative:
.1 Inspect substrate prior to commencement of work, during application of materials and upon completion of work.
.2 Provide technical assistance to the installer and assist where required in correct installation of carpet tile.

PART 2 - PRODUCTS

2.1 MATERIALS

.1 Carpet tile: Salvaged carpet tiles supplied under Work of Section 02 41 23.

.2 Carpet tile adhesive: water based.
.1 Acrylic release type: low VOC, recommended by carpet tile manufacturer.

.3 Resilient base: In accordance with Section 09 65 00.

.4 Reducing edge strips, thresholds: Nitrile rubber plasticized vinyl, 80-95 Shore A Durometer, adhesive as recommended by manufacturer.

.5 Sub-floor filler: premixed latex mixed with water to produce cementitious paste.

PART 3 - EXECUTION

3.1 SUB-FLOOR TREATMENT

.1 Remove ridges and bumps.

.2 Apply sub-floor filler to low spots and cracks to achieve floor level to a tolerance of 1:500; allow to cure.

.3 Remove dust, old adhesive, dirt, sealer and wax from existing surfaces.

3.2 INSTALLATION

.1 Prepare floor surfaces in accordance with CRI Carpet Installation Standard.

.2 Commence work after finishing work is completed.

.3 Install to CRI Carpet Installation Standard.

.4 Cut and fit around projections through floor.

.5 Finish installation to present smooth wearing surface free from burring or embedded foreign matter.

.6 HEPA Vacuum finished area with commercial grade vacuum with a beater bar head.

.7 Ensure colour, pattern and texture match within any one area.

.8 Fit carpet tile tight to abutting vertical surfaces.

3.3 CARPET TILE

.1 Apply adhesive and install carpet tile in accordance with manufacturer's instructions with acrylic release type adhesive.

.2 Lay tiles with seams within manufacturer's tolerances.

3.4 RESILIENT BASE

.1 Resilient base installation to be in accordance with Section 09 65 00.

3.5 CLEANING AND PROTECTION

.1 Vacuum carpets clean immediately after completion of installation. Protect traffic areas.

.2 Prohibit traffic on carpet until adhesive is cured.

END

PART 1 - GENERAL

1.1 REFERENCES

.1 Architectural Painting Specifications Manual, Master Painters Institute (MPI), 2014.

.2 Systems and Specifications Manual, SSPC Painting Manual, Volume Two, Society for Protective Coatings (SSPC).

.3 Test Method for Measuring Total Volatile Organic Compound Content of Consumer Products, Method 24 (for Surface Coatings) of the Environmental Protection Agency (EPA).

.4 National Fire Code of Canada 2010 (NFC).

1.2 QUALITY ASSURANCE

.1 Contractor shall have a minimum of five years proven satisfactory experience. When requested, provide a list of last three comparable jobs including, job name and location, specifying authority, and project manager.

.2 Qualified journeymen who have a "Tradesman Qualification Certificate of Proficiency" shall be engaged in painting work. Apprentices may be employed provided they work under the direct supervision of a qualified journeyman in accordance with trade regulations.

.3 Conform to latest MPI requirements for interior painting work including preparation and priming.

.4 Materials (primers, paints, coatings, varnishes, stains, lacquers, fillers, thinners, solvents, etc.) shall be in accordance with MPI Painting Specification Manual "Approved Product" listing and shall be from a single manufacturer for each system used.

.5 Other paint materials such as linseed oil, shellac, turpentine, etc. shall be the highest quality product of an approved manufacturer listed in MPI Painting Specification Manual and shall be compatible with other coating materials as required.

1.2 QUALITY ASSURANCE (Cont'd)

.6 Retain purchase orders, invoices and other documents to prove conformance with noted MPI requirements when requested by Departmental Representative.

.7 Standard of Acceptance:
.1 Walls: No defects visible from a distance of 1000 mm at 90° to surface.
.2 Ceilings: No defects visible from floor at 45° to surface when viewed using final lighting source.
.3 Final coat to exhibit uniformity of colour and uniformity of sheen across full surface area.

1.3 ENVIRONMENTAL PERFORMANCE REQUIREMENTS

.1 Provide paint products meeting MPI "Environmentally Friendly" E2 ratings based on VOC (EPA Method 24) content levels.

.2 Where indoor air quality (odour) is a problem, use only MPI listed materials having a minimum E2 rating.

1.4 INSPECTION REQUIREMENTS

.1 Interior painting and decorating work shall be inspected by a Paint Inspection Agency (inspector) acceptable to the specifying authority and local Painting Contractor's Association. Painting contractor shall notify Paint Inspection Agency a minimum of one week prior to commencement of work and provide a copy of project painting specification, plans and elevation drawings (including pertinent details) as well as a Finish Schedule.

.2 Interior surfaces requiring painting shall be inspected by Paint Inspection Agency who shall notify Departmental Representative and General Contractor in writing of defects or problems, prior to commencing painting work, or after prime coat shows defects in substrate.

.3 Where "special" painting, coating or decorating system applications (i.e. elastomeric coatings) or non-MPI listed products or systems are to be used, paint or coating manufacturer shall provide as part of this work, certification of surfaces and conditions for specific paint or coating system application as well as on site

1.4 INSPECTION REQUIREMENTS (Cont'd)

.3 (Cont'd)
supervision, inspection and approval of their paint or coating system application as required at no additional cost to Owner.

1.5 SCHEDULING OF WORK

.1 Submit work schedule for various stages of painting to Departmental Representative for approval. Submit schedule minimum of 48 hours in advance of proposed operations.

.2 Obtain written authorization from Departmental Representative for any changes in work schedule.

.3 Schedule painting operations to prevent disruption of occupants in and about the building.

1.6 SUBMITTALS

.1 Submit product data and manufacturer's installation/application instructions for each paint and coating product to be used in accordance with Section 01 33 00.

.2 Submit WHMIS MSDS.- Material Safety Data Sheets in accordance with Section 01 33 00.

.3 Upon completion, submit records of products used. List products in relation to finish system and include the following:
.1 Product name, type and use.
.2 Manufacturer's product number.
.3 Colour numbers.
.4 MPI Environmentally Friendly classification system rating.
.5 Manufacturer's Material Safety Data Sheets (MSDS).

.4 Certificates: Submit certified documentation to confirm each airless spray painter has minimum of 5 years experience on applications of similar complexity and scope.

1.7 SAMPLES

.1 Submit full range colour sample chips in accordance with Section 01 33 00. Indicate where colour availability is restricted.

1.7 SAMPLES (Cont'd)

.2 Submit duplicate 200 x 300 mm sample panels of each paint with specified paint or coating in colours, gloss/sheen and textures required to MPI Painting Specification Manual standards submitted on the following substrate materials:
.1 3 mm plate steel for finishes over metal surfaces.
.2 50 mm concrete block for finishes over concrete or concrete masonry surfaces.
.3 13 mm gypsum board for finishes over gypsum board and other smooth surfaces.

.3 When approved, sample panels shall become acceptable standard of quality for appropriate on-site surface with one of each sample retained on-site.

1.8 QUALITY CONTROL

.1 Provide mock-up in accordance with Section 01 45 00.

.2 When requested by Departmental Representative, prepare and paint designated surface, area, room or item (in each colour scheme) to requirements specified herein, with specified paint or coating showing selected colours, gloss/sheen, textures and workmanship to MPI Painting Specification Manual standards for review and approval. When approved, surface, area, room and/or items shall become acceptable standard of finish quality and workmanship for similar on-site work.

1.9 EXTRA MATERIALS

.1 Submit maintenance materials in accordance with Section 01 78 00.

.2 Submit one - four litre can of each type and colour of finish coating. Identify colour and paint type in relation to established colour schedule and finish system.

.3 Deliver to Contractor and store where directed.

1.10 DELIVERY, HANDLING AND STORAGE

.1 Deliver, store and handle materials in accordance with Section 01 61 00.

.2 Labels shall clearly indicate:
.1 Manufacturer's name and address.
.2 Type of paint or coating.
.3 Compliance with applicable standard.
.4 Colour number in accordance with established colour schedule.

.3 Remove damaged, opened and rejected materials from site.

.4 Provide and maintain dry, temperature controlled, secure storage.

.5 Observe manufacturer's recommendations for storage and handling.

.6 Store materials and supplies away from heat generating devices.

.7 Store materials and equipment in a well ventilated area with temperature range 7°C to 30°C.

.8 Store temperature sensitive products above minimum temperature as recommended by manufacturer.

.9 Keep areas used for storage, cleaning and preparation, clean and orderly to approval of Departmental Representative. After completion of operations, return areas to clean condition to approval of Departmental Representative.

.10 Remove paint materials from storage only in quantities required for same day use.

.11 Comply with requirements of Workplace Hazardous Materials Information System (WHMIS) regarding use, handling storage, and disposal of hazardous materials.

.12 Fire Safety Requirements:
.1 Provide one 9 kg Type ABC fire extinguisher adjacent to storage area.
.2 Store oily rags, waste products, empty containers and materials subject to spontaneous combustion in ULC approved, sealed containers and remove from site on a daily basis.

1.10 DELIVERY, HANDLING AND STORAGE (Cont'd)

.12 Fire Safety Requirements:(Cont'd)
.3 Handle, store, use and dispose of flammable and combustible materials in accordance with the National Fire Code of Canada.

1.11 SITE REQUIREMENTS

.1 Heating, Ventilation and Lighting:
.1 Ventilate enclosed spaces in accordance with Section 01 51 00.
.2 Perform no painting work unless adequate and continuous ventilation and sufficient heating facilities are in place to maintain ambient air and substrate temperatures above 10°C for 24 hours before, during and after paint application until paint has cured sufficiently.
.3 Where required, provide continuous ventilation for seven days after completion of application of paint.
.4 Coordinate use of existing ventilation system with Owner and ensure its operation during and after application of paint as required.
.5 Provide temporary ventilating and heating equipment where permanent facilities are not available or supplemental ventilating and heating equipment if ventilation and heating from existing system is inadequate to meet minimum requirements.
.6 Perform no painting work unless a minimum lighting level of 323 Lux is provided on surfaces to be painted. Adequate lighting facilities shall be provided by General Contractor.

.2 Temperature, Humidity and Substrate Moisture Content Levels:
.1 Unless specifically pre-approved by the specifying body, Paint Inspection Agency and the applied product manufacturer, perform no painting work when:
.1 Ambient air and substrate temperatures are below 10°C.
.2 Substrate temperature is over 32°C unless paint is specifically formulated for application at high temperatures.
.3 Substrate and ambient air temperatures are expected to fall outside MPI or paint manufacturer's prescribed limits.

1.11 SITE REQUIREMENTS (Cont'd)

.2 (Cont'd)

.1 (Cont'd)

.4 The relative humidity is above 85% or when the dew point is less than 3°C variance between the air/surface temperature.

.5 Rain or snow are forecast to occur before paint has thoroughly cured or when it is foggy, misty, raining or snowing at site.

.2 Perform no painting work when the maximum moisture content of the substrate exceeds:

.1 12% for concrete and masonry (clay and concrete brick/block).

.2 12% for plaster and gypsum board.

.3 Conduct moisture tests using a properly calibrated electronic Moisture Meter, except test concrete floors for moisture using a simple "cover patch test".

.4 Test concrete, masonry and plaster surfaces for alkalinity as required.

.3 Surface and Environmental Conditions:

.1 Apply paint finish only in areas where dust is no longer being generated by related construction operations or when wind or ventilation conditions are such that airborne particles will not affect quality of finished surface.

.2 Apply paint only to adequately prepared surfaces and to surfaces within moisture limits noted herein.

.3 Apply paint only when previous coat of paint is dry or adequately cured.

.4 Additional Interior Application Requirements:

.1 Apply paint finishes only when temperature at location of installation can be satisfactorily maintained within manufacturer's recommendations.

.2 Apply paint in occupied facilities during after hours only. Schedule operations to approval of Owner such that painted surfaces will have dried and cured sufficiently before occupants are affected.

1.12 WASTE MANAGEMENT AND DISPOSAL

.1 Separate and recycle waste materials in accordance with Section 01 74 20.

.2 Paint, stain and wood preservative finishes and related materials (thinners, solvents, etc.,) are regarded as hazardous products and are subject to regulations for disposal. Information on these controls can be obtained from Provincial Ministries of Environment and Regional levels of Government.

.3 Material which cannot be reused must be treated as hazardous waste and disposed of in an appropriate manner.

.4 Place materials defined as hazardous or toxic waste, including used sealant and adhesive tubes and containers, in containers or areas designated for hazardous waste.

.5 To reduce the amount of contaminants entering waterways, sanitary/storm drain systems or into ground the following procedures shall be strictly adhered to:
.1 Retain cleaning water for water-based materials to allow sediments to be filtered out.
.2 Retain cleaners, thinners, solvents and excess paint and place in designated containers and ensure proper disposal.
.3 Return solvent and oil soaked rags used during painting operations for contaminant recovery, proper disposal, or appropriate cleaning and laundering.
.4 Dispose of contaminants in an approved legal manner in accordance with hazardous waste regulations.
.5 Empty paint cans are to be dry prior to disposal or recycling (where available).

.6 Where paint recycling is available, collect waste paint by type and provide for delivery to recycling or collection facility.

.7 Set aside and protect surplus and uncontaminated finish materials: Deliver to or arrange collection by organizations for verifiable re-use or re-manufacturing.

.8 Close and seal tightly partly used sealant and adhesive containers and store protected in well ventilated fire-safe area at moderate temperature.

PART 2 - PRODUCTS

2.1 MATERIALS

.1 Paint materials listed in the MPI Approved Products List (APL) are acceptable for use on this project.

.2 Paint materials for paint systems shall be products of a single manufacturer.

.3 Only qualified products with E2 "Environmentally Friendly" rating are acceptable for use on this project.

.4 Paints, coatings, adhesives, solvents, cleaners, lubricants, and other fluids, shall:
.1 be water-based wherever possible.
.2 be non-flammable.
.3 be manufactured without compounds which contribute to ozone depletion in the upper atmosphere.
.4 be manufactured without compounds which contribute to smog in the lower atmosphere.
.5 do not contain methylene chloride, chlorinated hydrocarbons, toxic metal pigments.

.5 Water-borne surface coatings must be manufactured and transported in a manner that steps of process, including disposal of waste products arising therefrom, will meet requirements of applicable governmental acts, by-laws and regulations including, for facilities located in Canada, Fisheries Act and Canadian Environmental Protection Act (CEPA).

.6 Water-borne surface coatings must not be formulated or manufactured with aromatic solvents, formaldehyde, halogenated solvents, mercury, lead, cadmium, hexavelant chromium or their compounds.

.7 Water-borne surface coatings and recycled water-borne surface coatings must have a flash point of 61.0°C or greater.

.8 Both water-borne surface coatings and recycled water-borne surface coatings must be made by a process that does not release:
.1 Matter in undiluted production plant effluent generating a 'Biochemical Oxygen

2.1 MATERIALS (Cont'd)

.8 (Cont'd)
.1 (Cont'd)
Demand' (BOD) in excess of 15 mg/L to a natural watercourse or a sewage treatment facility lacking secondary treatment.
.2 Total Suspended Solids (TSS) in undiluted production plant effluent in excess of 15 mg/L to a natural watercourse or a sewage treatment facility lacking secondary treatment.

.9 Water-borne paints and stains, recycled water-borne surface coatings and water borne varnishes must meet a minimum "Environmentally Friendly" E2 rating.

.10 Recycled water-borne surface coatings must contain 50% post-consumer material by volume.

.11 Recycled water-borne surface coatings must not contain:
.1 Lead in excess of 600.0 ppm weight/weight total solids.
.2 Mercury in excess of 50.0 ppm weight/weight total product.
.3 Cadmium in excess of 1.0 ppm weight/weight total product.
.4 Hexavelant chromium in excess of 3.0 ppm weight/weight total product.
.5 Organochlorines or polychlorinated biphenyls (PCBS) in excess of 1.0 ppm weight/weight total product.

.12 The following must be performed on each batch of consolidated post-consumer material before surface coating is reformulated and canned. These tests must be performed at a laboratory or facility which has been accredited by the Standards Council of Canada.
.1 Lead, cadmium and chromium are to be determined using ICP-AES (Inductively Coupled Plasma - Atomic Emission Spectroscopy) technique no. 6010 as defined in EPA SW-846.
.2 Mercury is to be determined by Cold Vapour Atomic Absorption Spectroscopy using Technique no. 7471 as defined in EPA SW-846.
.3 Organochlorines and PCBs are to be determined by Gas Chromatography using Technique no. 8081 as defined in EPA SW-846.

.13 Epoxy wall coatings: In accordance with Section 09 96 00.

2.2 COLOURS

.1 Departmental Representative will provide Colour Schedule after Contract award.

.2 Selection of colours will be from manufacturers full range of colours.

.3 Where specific products are available in a restricted range of colours, selection will be based on the limited range.

.4 Second coat in a three coat system to be tinted slightly lighter colour than top coat to show visible difference between coats.

2.3 MIXING AND TINTING

.1 Perform colour tinting operations prior to delivery of paint to site. On-site tinting of painting materials is allowed only with Departmental Representative's written permission.

.2 Paste, powder or catalyzed paint mixes shall be mixed in strict accordance with manufacturer's written instructions.

.3 Where thinner is used, addition shall not exceed paint manufacturer's recommendations. Do not use kerosene or any such organic solvents to thin water-based paints.

.4 Thin paint for spraying according in strict accordance with paint manufacturer's instructions. If directions are not on container, obtain instructions in writing from manufacturer and provide copy of instructions to Departmental Representative.

.5 Re-mix paint in containers prior to and during application to ensure break-up of lumps, complete dispersion of settled pigment, and colour and gloss uniformity.

2.4 GLOSS/SHEEN RATINGS

.1 Paint gloss shall be defined as the sheen rating of applied paint, in accordance with the following values:

2.4 GLOSS/SHEEN RATINGS (Cont'd)

.1 (Cont'd)

Gloss Level Category	Units @ 60°	Units @ 85°
G1 - matte finish	0 to 5	max. 10
G2 - velvet finish	0 to 10	10 to 35
G3 - eggshell finish	10 to 25	10 to 35
G4 - satin finish	20 to 35	min. 35
G5 - semi-gloss finish	35 to 70	
G6 - gloss finish	70 to 85	
G7 - high gloss finish	> 85	

.2 Gloss level ratings of painted surfaces shall be selected by the Departmental Representative.

2.5 INTERIOR PAINTING SYSTEMS

.1 Concrete Masonry Units: smooth face block:
.1 INT 4.2D High performance architectural latex, gloss level to be selected by the Departmental Representative.
.2 INT 4.2F Epoxy (tile-like) finish for dry environments, gloss level to be selected by the Departmental Representative. .

.2 Structural Steel and Metal Fabrications: columns, beams, joists, etc.
.1 INT 5.1R High performance architectural latex, gloss level to be selected by the Departmental Representative.

.3 Galvanized Metal: doors, frames, misc. steel, pipes, ducts, etc.
.1 INT 5.3B Waterborne light industrial coating, gloss level to be selected by the Departmental Representative.
.2 INT 5.3D Epoxy finish (over epoxy primer), gloss level to be selected by the Departmental Representative. For use in corrosive environments.

2.5 INTERIOR PAINTING SYSTEMS (Cont'd)

.4 Plaster and Gypsum Board: gypsum wallboard, drywall, "sheet rock type material", etc., and textured finishes

.1 INT 9.2B High performance architectural latex finish, gloss level to be selected by the Departmental Representative.

.2 INT 9.2F Waterborne epoxy (tile-like) finish, gloss level to be selected by the Departmental Representative.

PART 3 - EXECUTION

3.1 GENERAL

.1 Perform preparation and operations for interior painting in accordance with MPI Painting Specifications Manual except where specified otherwise.

.2 Apply paint materials in accordance with paint manufacturer's written application instructions.

3.2 EXISTING SURFACES

.1 Remove all rust, scale, loose paint and other deleterious matters from surface of existing walls, ceilings, doors, frames, glazing stops, structural and miscellaneous steel, and other existing surfaces which require re-painting. Thoroughly clean and prepare such surfaces to accept positive and permanent bond of new paint finish. If such preparation exposes bare surface, provide touch up primer.

3.3 EXISTING CONDITIONS

.1 Investigate existing substrates for problems related to proper and complete preparation of surfaces to be painted. Report to Departmental Representative damages, defects, unsatisfactory or unfavourable conditions before proceeding with work.

.2 Conduct moisture testing of surfaces to be painted using a properly calibrated electronic moisture meter, except test concrete floors for moisture using a simple "cover patch test" and report findings to Departmental Representative. Do not proceed with work until conditions fall within acceptable range as recommended by manufacturer.

3.3 EXISTING CONDITIONS (Cont'd)

.3 Maximum moisture content as follows:
.1 Plaster and Gypsum Board: 12%.
.2 Concrete Block: 12%.

3.4 PROTECTION

.1 Protect existing building surfaces and adjacent structures from paint spatters, markings and other damage by suitable non-staining covers or masking. If damaged, clean and restore such surfaces as directed by Departmental Representative.

.2 Protect items that are permanently attached such as Fire Labels on doors and frames.

.3 Protect factory finished products and equipment.

.4 Protect building occupants in and about the building.

.5 Removal of electrical cover plates, light fixtures, surface hardware on doors, and other surface mounted equipment, fittings and fastenings shall be done prior to undertaking any painting operations by General Contractor. Items shall be securely stored and re-installed after painting is completed by General Contractor.

.6 Move and cover furniture and portable equipment as necessary to carry out painting operations. Replace as painting operations progress.

.7 As painting operations progress, place "WET PAINT" signs in occupied areas to approval of Departmental Representative.

3.5 CLEANING AND PREPARATION

.1 Clean and prepare surfaces in accordance with MPI Painting Specification Manual requirements. Refer to MPI Manual in regard to specific requirements and as follows:
.1 Remove dust, dirt, and other surface debris by vacuuming, wiping with dry, clean cloths or compressed air.
.2 Wash surfaces with a biodegradable detergent and bleach where applicable and clean warm water using a stiff bristle brush

3.5 CLEANING AND PREPARATION (Cont'd)

.1 (Cont'd)

.2 (Cont'd)

to remove dirt, oil and other surface contaminants.

.3 Rinse scrubbed surfaces with clean water until foreign matter is flushed from surface.

.4 Allow surfaces to drain completely and allow to dry thoroughly.

.5 Prepare surfaces for water-based painting, water-based cleaners should be used in place of organic solvents.

.6 Use trigger operated spray nozzles for water hoses.

.7 Many water-based paints cannot be removed with water once dried. However, minimize the use of kerosene or any such organic solvents to clean up water-based paints.

.8 Existing gypsum board:

.1 Remove dust, dirt, oil, grease, glue and all foreign material. Clean with stiff fibre brush prior to applying primer coat.

.2 Coordinate repairs and touch-ups with the responsible Section.

.3 Lightly sand surface to smooth out ridges and provide neat smooth surface.

.9 Existing concrete block:

.1 Clean existing surfaces by pressure washing where indicated on drawings with a TSP solution and pressure range of 1500 - 4000 PSI at 6 - 12".

.2 Rinse areas with clean water and allow to throughly dry. Provide for collection and disposal of water.

.10 SteelFabrications such as hollow metal doors and frames (existing): Scrape and either hand or power wire brush surfaces to remove mill and scale.

.2 Prevent contamination of cleaned surfaces by salts, acids, alkalis, other corrosive chemicals, grease, oil and solvents before prime coat is applied and between applications of remaining coats. Apply primer, paint, or pretreatment as soon as possible after cleaning and before deterioration occurs.

.3 Sand and dust between coats as required to provide adequate adhesion for next coat and to remove defects visible from a distance up to 1000 mm.

3.5 CLEANING AND PREPARATION (Cont'd)

.4 Clean metal surfaces to be painted by removing rust, loose mill scale, welding slag, dirt, oil, grease and other foreign substances in accordance with MPI requirements. Remove traces of blast products from surfaces, pockets and corners to be painted by brushing with clean brushes, blowing with clean dry compressed air, or vacuum cleaning.

.5 Touch up of shop primers with primer as specified in applicable section. Major touch-up including cleaning and painting of field connections, welds, rivets, nuts, washers, bolts, and damaged or defective paint and rusted areas, shall be by supplier of fabricated material.

.6 Do not apply paint until prepared surfaces have been accepted by Departmental Representative.

3.6 APPLICATION

.1 Method of application to be as approved by Departmental Representative. Apply paint by brush or roller or spray. Conform to manufacturer's application instructions unless specified otherwise.

.2 Brush and Roller Application:
.1 Apply paint in a uniform layer using brush and/or roller of types suitable for application.
.2 Work paint into cracks, crevices and corners.
.3 Paint surfaces and corners not accessible to brush using spray, daubers and/or sheepskins. Paint surfaces and corners not accessible to roller using brush, daubers or sheepskins.
.4 Brush and/or roll out runs and sags, and over-lap marks. Rolled surfaces shall be free of roller tracking and heavy stipple unless approved by Departmental Representative.
.5 Remove runs, sags and brush marks from finished work and repaint.

.3 Spray application:
.1 Provide and maintain equipment that is suitable for intended purpose, capable of properly atomizing paint to be applied, and equipped with suitable pressure regulators and gauges.

3.6 APPLICATION (Cont'd)

.3 Spray application:(Cont'd)
.2 Keep paint ingredients properly mixed in containers during paint application either by continuous mechanical agitation or by intermittent agitation as frequently as necessary.
.3 Apply paint in a uniform layer, with overlapping at edges of spray pattern.
.4 Brush out immediately all runs and sags.
.5 Use brushes to work paint into cracks, crevices and places which are not adequately painted by spray.

.4 Use dipping, sheepskins or daubers only when no other method is practical in places of difficult access and only when specifically authorized by Departmental Representative.

.5 Apply coats of paint as a continuous film of uniform thickness. Repaint thin spots or bare areas before next coat of paint is applied.

.6 Allow surfaces to dry and properly cure after cleaning and between subsequent coats for minimum time period as recommended by manufacturer.

.7 Sand and dust between coats to remove visible defects.

.8 Finish surfaces both above and below sight lines as specified for surrounding surfaces, including such surfaces as tops of interior cupboards and cabinets and projecting ledges.

.9 Finish top, bottom, edges and cutouts of doors after fitting as specified for door surfaces.

3.7 MECHANICAL/ ELECTRICAL EQUIPMENT

.1 Unless otherwise specified, paint finished area exposed conduits, piping, hangers, ductwork and other mechanical and electrical equipment with colour and finish to match adjacent surfaces, except as noted otherwise.

.2 Other unfinished areas: leave exposed conduits, piping, hangers, ductwork and other mechanical and electrical equipment in original finish and touch up scratches and marks.

3.7 MECHANICAL/ ELECTRICAL EQUIPMENT (Cont'd)

.3 Touch up scratches and marks on factory painted finishes and equipment with paint as supplied by manufacturer of equipment.

.4 Do not paint over nameplates.

.5 Keep sprinkler heads free of paint.

.6 Paint inside of ductwork where visible behind grilles, registers and diffusers with primer and one coat of matt black paint.

.7 Paint both sides and edges of backboards for telephone and electrical equipment before installation. Leave equipment in original finish except for touch-up as required, and paint conduits, mounting accessories and other unfinished items.

3.8 FIELD QUALITY CONTROL

.1 Field inspection of painting operations to be carried out be independent inspection firm as designated by Departmental Representative.

.2 Advise Departmental Representative when surfaces and applied coating is ready for inspection. Do not proceed with subsequent coats until previous coat has been approved.

.3 Cooperate with inspection firm and provide access to areas of work.

3.9 RESTORATION

.1 Clean and re-install all hardware items removed before undertaken painting operations.

.2 Remove protective coverings and warning signs as soon as practical after operations cease.

.3 Remove paint splashings on exposed surfaces that were not painted. Remove smears and spatter immediately as operations progress, using compatible solvent.

.4 Protect freshly completed surfaces from paint droppings and dust to approval of Departmental Representative. Avoid scuffing newly applied paint.

.5 Restore areas used for storage, cleaning, mixing and handling of paint to clean

3.9 RESTORATION (Cont'd)

.5 (Cont'd)
condition as approved by Departmental Representative.

END

PART 1 - GENERAL

1.1 RELATED SECTIONS

.1 Section 04 20 00: Concrete block.

.2 Section 09 21 16: Gypsum board.

1.2 REFEENCES

.1 American Society for Testing and Materials International, (ASTM):
.1 ASTM D2240-05(2010), Standard Test Method for Rubber Property-Durometer Hardness.
.2 ASTM D2794-93(2010), Standard Test Method for Resistance of Organic Coatings to the Effects of Rapid Deformation (Impact).
.3 ASTM D4060-10, Standard Test Method for Abrasion Resistance of Organic Coatings by the Taber Abraser.

1.3 PRODUCT DATA SHEETS

.1 Submit product data sheets in accordance with Sections 01 33 00 and 01 78 00.

1.4 WHMIS

.1 Submit two copies of MSDS - Material Safety Data Sheets to Departmental Representative.

.2 Indicate VOC's during application and curing.

.3 Enforce use of personal protective equipment required by MSDS.

1.5 SAMPLES

.1 Submit samples in accordance with Sections 01 33 00 and 01 78 00.

.2 Submit duplicate 400 x 200 mm samples of each colour and finish coating applied to porous concrete block and gypsum board.

1.6 QUALIFICATIONS

.1 Applied by applicator trained and licensed by epoxy material manufacturer for application of its products.

1.6 QUALIFICATIONS (Cont'd)

.2 Manufacturer's representative:
.1 Inspect substrate prior to commencement of work, during application of materials and upon completion of work.
.2 Provide technical assistance to the applicator and assist where required in correct installation of wall and ceiling coatings.

1.7 MOCK-UP

.1 Apply materials of each finish and decorative effect to approximately 2 m^2 area of surface to be treated.

.2 Allow 24 h for inspection of mock-up by Departmental Representativebefore proceeding with coating work.

.3 Do not proceed until mock-up has been inspected and accepted by Departmental Representative.

.4 Reviewed and accepted mock-up shall become part of installed work.

1.8 ENVIRONMENTAL REQUIREMENTS

.1 Do not apply epoxy systems unless uniform minimum 16°C air temperature at installation area for 24 hours prior to and after application.

.2 Provide adequate ventilation or isolation measures to protect against toxic fumes.
.1 Ventilate area 24 hours per day, during installation and for 7 days after installation is completed with minimum 30% outside air.
.2 Ventilate at a rate sufficient to produce a negative pressure in the work area.

1.9 MAINTENANCE DATA

.1 Provide maintenance data for coatings for incorporation into manual specified in Sections 01 33 00 and 01 78 00.

PART 2 - PRODUCTS

2.1 MATERIALS

.1 Ensure compatibility for all epoxy materials including primers, resins, hardening agents, finish coats and sealer coats.

.2 All epoxy materials from same manufacturer.

.3 Only products listed on the Canadian Food Inspection Agency, Reference Listing of Accepted Construction Materials, Packaging Materials and Non-Food Chemical Products are acceptable for this project. Refer to http://www.inspection.gc.ca/english/ppc/references/ document d2-aze.shtml for floors and d1-aze.shtml for walls and ceilings.

.4 Block filler: one component, high build, copolymer emulsion with inorganic pigments, stabilizers, extenders and fillers.

2.2 WALL SYSTEM STANDARD EPOXY

.1 Wall and ceiling coating: 2 part epoxy, 92% solids, colour and finish as selected by Departmental Representative.
- .1 Minimum dry film thickness: 0.381 mm.
- .2 Abrasion resistance: to ASTM D4060, CS-17 wheel, 1,000 g load, 1,000 cycles: 0.1 gm maximum weight loss.
- .3 Impact resistance: to ASTM D2794 (no cracking crazing or loss of adhesion): exceeds 24 in.-lbs.
- .4 Hardness: to ASTM D2240, 80-85 Shore D.
- .5 Temperature limitations:
  - .1 Continuous exposure: 60°C.
  - .2 Intermittent exposure: 93°C.

2.3 MIXES

.1 Mix materials in accordance with manufacturer's written instructions.

PART 3 - EXECUTION

3.1 PREPARATION OF SURFACES

.1 Prepare surfaces in accordance with manufacturer's instructions.

.2 Remove oil, dirt and grease with industrial detergent, as recommended by epoxy manufacturers representative.

.3 Mask surrounding surfaces to provide neat, clean juncture lines.

.4 Protect adjacent surfaces and equipment from damage by overspray.

.5 Complete work penetrating substrate before installing coating.

3.2 PREPARATION OF WALLS

.1 Apply 2 coats of block filler to walls to provide smooth surface for finish coating.

3.3 WALL SYSTEM APPLICATION

.1 Mix in accordance with material manufacturer's written instructions.

.2 Apply wall coating by spray or roller. Minimum dry film thickness 0.204 mm (8 mils).

.3 Coordinate with room finish schedule.

3.4 CEILING SYSTEM APPLICATION

.1 Mix in accordance with material manufacturer's written instructions.

.2 Apply ceiling coating by spray or roller. Minimum dry film thickness 0.204 mm (8 mils).

.3 Coordinate with room finish schedule.

3.5 REPAIRS

.1 Touch-up and refinish minor defective work. Refinish entire coated surface areas where finish is damaged or otherwise unacceptable.

3.6 CLEANING

.1 Remove promptly as work progresses spilled or spattered materials from surfaces of work performed under other Sections. Clean floors on completion of work. Do not mar surfaces while removing.

.2 Leave storage and mixing areas in same condition as equivalent spaces in project.

3.7 PROTECTION

.1 Erect barriers to prevent the entry and presence of personnel not performing work of this Section during application of epoxy coating, and for 48 hours following completion of application.

END

PART 1 - GENERAL

1.1 RELATED SECTIONS

.1 Section 01 11 00: Owner supplied and Contractor installed fume hoods, autoclave and specialty cabinets.

1.2 REFERENCES

.1 National Fire Code(NFC), 2010.

.2 Nationally Certified Testing Laboratory (NCIL).

.3 Scientific Equipment & Furniture Association (SEFA).

1.3 SUBMITTALS

.1 Reports amd certificates: Submit for Departmental Representatives review reports and certificates certifying that fume hoods and autoclaves are certified by a Nationlly Certified Testing Laboratory (NCIL) in accordance with requirements of NFC 2010.

1.4 QUALITY ASSURANCE

.1 Installers qualifications: Perform Work of this Section by a company that has a minimum of five years proven experience in the installation of laboratory equipment and cabinetry of a similar size and nature and that is approved by manufacturer. Submit to Departmental Representative, installer's current certificate of approval by the material manufacturer as proof of compliance.

.2 Fume hoods and autoclave are to be certified by a Nationally Certified Testing Laboratory (NCIL).

.3 Perform work of this Section in accordance with SEFA recommended practices.

PART 2 - PRODUCTS

2.1 MATERIALS

.1 Fume hoods, autoclave and specialty cabinets:

.1 Fume hoods, autoclave and specialty cabinets to be Owner supplied and Contractor installed.

.2 Provide all components, accessories and equipment as required for complete installation of noted laboratory equipment and cabinetry.

.3 Use only fastenings compatible with materials.

.4 Specialty cabinets to include acid and solvent storage cabinets, one set located below each fume hood.

.5 Acid cabinet to be provided with venting through fume hood. Exhaust ducts shall extend into the pipe chase and carried through to the service core wall for connection by the Division 23 as required. Ducting material shall be 50 mm diameter flexible stainless steel tubing unless otherwise recommended by fume hood manufacturer to suit condition.

PART 3 - EXECUTION

3.1 EXAMINATION

.1 Verify condition and dimensions of previously installed Work upon which this Section depends. Report defects to Departmental Representative. Commencement of Work means acceptance of existing conditions.

.2 Examine previously installed Work, upon which this Section depends, verify dimensions and condition of existing Work, and coordinate repairs, alterations, and rectification if necessary. Commencement of Work of this Section is deemed to signify acceptance of existing, prior conditions.

.3 Obtain Departmental Representative's written approval prior to field cutting or altering of structural members.

3.2 INSTALLATION

.1 Install fume hoods, autoclave and specialty cabinets in accordance with reviewed shop drawings, manufacturer's written instructions and SEFA requirements.

.2 Coordinate with Divisions 22, 23 and 26 as required for piping, venting and electrical work required by work of this Section.

.3 Install fume hoods straight, plumb, level and fastened securely to prevent distortion or displacement, or both. Shim as necessary with concealed shims.

.4 Perform drilling of concrete and steel as required to fasten Work of this Section.

3.3 ADJUSTMENT AND CLEANING

.1 Verify that installed equipment functions properly, and adjust accordingly to ensure satisfactory operation.

.2 Adjust cabinetry as required for smooth and efficient operation.

.2 Refinish damaged or defective surfaces of equipment exposed to view so that no variation in surface appearance is discernible.

END

PART 1 - GENERAL

1.1 PRODUCTS SUPPLIED BUT NOT INSTALLED UNDER THIS SECTION

.1 Faucets, tail pieces, strainers, traps, and drains.

1.2 REFERENCES

.1 ASTM International (ASTM)

.1 ASTM A167-99(2009), Standard Specification for Stainless and Heat-Resisting Chromium-Nickel Steel Plate, Sheet, and Strip.

.2 ASTM A653/A653M-13, Standard Specification for Steel Sheet, Zinc-Coated (Galvanized) or Zinc-Iron Alloy-Coated (Galvannealed) by the Hot-Dip Process.

.3 ASTM B456-11e1, Standard Specification for Electrodeposited Coatings of Copper Plus Nickel Plus Chromium and Nickel Plus Chromium.

.3 ASTM B117-11, Standard Practice for Operating Salt Spray (Fog) Apparatus.

.4 ASTM D256-10, Standard Test Methods for Determining the Izod Pendulum Impact Resistance of Plastics.

.5 ASTM D570-98(2010)e1, Standard Test Method for Water Absorption of Plastics.

.6 ASTM D635-10, Standard Test Method for Rate of Burning and/or Extent and Time of Burning of Plastics in a Horizontal Position.

.7 ASTM D638-10, Standard Test Method for Tensile Properties of Plastics.

.8 ASTM D695-10, Standard Test Method for Compressive Properties of Rigid Plastics.

.9 ASTM D696-08e1, Standard Test Method for Coefficient of Linear Thermal Expansion of Plastics Between -30°C and 30°C with a Vitreous Silica Dilatometer.

.10 ASTM D785-08, Standard Test Method for Rockwell Hardness of Plastics and Electrical Insulating Materials.

.11 ASTM D790-10, Standard Test Methods for Flexural Properties of Unreinforced and Reinforced Plastics and Electrical Insulating Materials.

.12 ASTM D2197-13, Standard Test Method for Adhesion of Organic Coatings by Scrape Adhesion.

.13 ASTM D2247-11, Standard Practice for Testing Water Resistance of Coatings in 100?% Relative Humidity.

1.2 REFERENCES (Cont'd)

.1 (Cont'd)
.14 ASTM E54-80(1996), Standard Test Methods for Chemical Analysis of Special Brasses and Bronzes (Withdrawn 2002).
.16 ASTM E478-08, Standard Test Methods for Chemical Analysis of Copper Alloys.

.2 National Electrical Manufacturers Association (NEMA)

.3 Scientific Equipment & Furniture Association (SEFA).

1.3 DESIGN REQUIREMENTS

.1 Chemical resistance of all components of casework: No detectable change in working material from:
.1 Acetate, Amyl.
.2 Acetate, Ehtyl.
.3 Acetic Acid, 98%.
.4 Acetone.
.5 Acid Dichromate, 5%.
.6 Alcohol, Butyl.
.7 Alcohol, Ethyl.
.8 Alcohol, Methyl.
.9 Ammonium Hydroxide, 28%.
.10 Benzene.
.11 Carbon Tetrachloride.
.12 Chloroform.
.13 Chromic Acid, 60%.
.14 Cresol.
.15 Dichlor Acetic Acid.
.16 Dimethylformanide.
.17 Dioxane.
.18 Ethyl Ether.
.19 Formaldehyde.
.20 Furfural.
.21 Hydrogen Peroxide.
.22 Iodine, Tincture of.
.23 Methyl Ethyl Ketone.
.24 Methylene Chloride.
.25 Mono Chlorobenzene.
.26 Naphtalene.
.27 Phenol, 90%.
.28 Phosphoric Acid, 85%.
.29 Sodium Hydroxide, 10%.
.30 Sulfuric Acid, 33%.
.31 Zinc Chloride, Saturated.

.2 Casework design to be as follows:
.1 Casework to be metric size to match existing casework.

1.3 DESIGN REQUIREMENTS (Cont'd)

.2 Casework design to be as follows:(Cont'd)
.2 Support systems must be a core and panel style support structure.
.3 Core structure can be supported by anchoring to suitable flooring material or may be supported by structural end gables (outrigger legs).
.4 Modular components to be suitable for single faced wall cores or double faced peninsula or island configuration.
.5 Core assemblies must have removable panels on all sides.
.6 Casework to include removable filler panels.

1.4 ACTION AND INFORMATIONAL SUBMITTALS

.1 Submit in accordance with Section 01 33 00.

.2 Product Data:
.1 Submit manufacturer's instructions, printed product literature and data sheets for steel laboratory casework and include product characteristics, performance criteria, physical size, finish and limitations.

.3 Shop Drawings:
.1 Submit drawings stamped and signed by professional engineer registered or licensed in Province of Ontario, Canada.
.2 Indicate on drawings:
.1 Details of laboratory casework construction and related and dimensional position, with sections.
.2 Location of each casework unit.
.3 Location for roughing-in of plumbing, including sinks, faucets, strainers and cocks and electrical services.

.4 Samples:
.1 Submit duplicate samples of:
.1 Countertop material, 300 x 300 mm including external corner.
.2 Standard colour of cabinet finish on 300 x 300 mm steel sheet.
.3 Cabinet hardware.
.4 Plumbing brass and electrical outlets.
.2 Submit one base cabinet complete with cupboard and drawers minimum 1200 mm long, including specified bench top, splashback, end return and curb shelf.

1.4 ACTION AND INFORMATIONAL SUBMITTALS (Cont'd)

.4 Samples:(Cont'd)
.3 Submit wall case minimum 600 mm long. If sliding doors used on project 875 mm minimum long.

.5 Test Reports:
.1 Include test reports by independent testing laboratories indicating results of furniture finish tests.

1.5 QUALITY ASSURANCE

.1 Installers qualifications: Perform Work of this Section by a company that has a minimum of five years proven experience in the installation of laboratory casework of a similar size and nature and that is approved by manufacturer. Submit to Departmental Representative, installer's current certificate of approval by the material manufacturer as proof of compliance.

.2 Retain a Professional Engineer, licensed in the Province of Ontario, with experience in Work of comparable complexity and scope, to perform the following services as part of the Work of this Section:
.1 Design of laboratory casework.
.2 Review, stamp, date and sign shop drawings.

.3 Perform work of this Section in accordance with SEFA recommended practices.

.4 Attach labels to electrical equipment attesting to CSA or Ontario Hydro approval.

.5 Mock-up:
.1 Construct one hinged door cabinet with in location acceptable to Departmental Representative.
.2 Arrange for Departmental Representative's review and acceptance, allow 48 hours after acceptance before proceeding with Work.
.3 Mock-up may remain as part of Work if accepted by Departmental Representative. Remove and dispose of mock-ups which do not form part of Work.
.4 Upon acceptance, mock-up shall serve as a minimum standard of quality for the balance of the work of this Section.

1.6 DELIVERY, STORAGE AND HANDLING

.1 Deliver, store and handle materials in accordance with Section 01 61 00 and with manufacturer's written instructions.

.2 Delivery and Acceptance Requirements: deliver materials to site in original factory packaging, labelled with manufacturer's name and address.

.3 Storage and Handling Requirements:
.1 Store materials in dry location and in accordance with manufacturer's recommendations in clean, dry, well-ventilated area.
.2 Store and protect steel laboratory casework from nicks, scratches, and blemishes.
.3 Replace defective or damaged materials with new.

.4 Packaging Waste Management: remove for reuse and return by manufacturer of pallets, crates, padding and packaging materials as specified in accordance with Section 01 74 20.

1.7 EXTENDED WARRANTY

.1 Submit a extended warranty for laboratory casework Work in accordance with General Conditions, except that warranty period is extended to 2 years.
.1 Against leaking of mechanical hardware including plumbing, warping or twisting of casework, and finish failure.
.2 Coverage: Complete replacement including affected adjacent parts.

PART 2 - PRODUCTS

2.1 ACCEPTABLE MANUFACTURERS

.1 Acceptable manufacturers of new casework:
.1 Bedcolab Ltd., 1-800-461-6414, www.bedcolab.com.
.2 Fisher Hamilton Scientific Canada, 1-920-793-1121, www.hamiltonscientic.com.
.3 mottLAB Inc., (905) 331-1877, www.mottlab.com.
.4 VWR International, 1-800-932-5000, https/ca.vwr.com.

.2 New casework: Refer to Section 00 01 20 for a list of new casework required for this Project.

2.2 EXISTING AND SALVAGED CASEWORK

.1 Existing laboratory casework:
.1 The manufacturer of existing laboratory casework is mottLAB Inc., (905) 331-1877, www.mottlab.com.
.2 Refer to existing lab casework inventory.
.3 Doors and drawers: Prefinished steel colour 'Dove Gray (601008)'.
.4 Frames, back panels, side panels and post/pilasters: Prefinished steel colour 'Cool White (601009)'.

.2 Salvaged casework:
.1 Existing casework salvaged Section as required for the supply of salvaged casework to be resinstalled under this Section.
.2 Refer to Section 00 01 20 for list of relocated existing casework for this Project.

2.3 MATERIALS

.1 Galvanized steel sheet: commercial quality to ASTM A653/A653M with Z275 zinc coating.

.2 Stainless steel sheet: to ASTM A167, Type 304 and 316, with finish to match existing.

.3 Stainless steel tubing: AISI Type 304, commercial grade, seamless welded, 1.5 mm wall thickness.

.4 Glazing: In accordance with Section 08 80 00.

.5 Sealants: In accordance with Section 07 90 00.

2.4 COUNTERTOP MATERIALS

.1 Solid phenolic countertops:
.1 25 mm thick, solid phenolic countertop material in black colour with low gloss smooth finish.
.2 Phenolic material to meet the below criteria:
.1 Coefficient of linear expansion: to ASTM D696, 1.65x105 in/°C.
.2 Comprehensive strength: to ASTM D695, 43, 000 psi.
.3 Fire resistance: To ASTM D635, self extinguishing.
.4 Flexural strength: to ASTM D790.
.1 Utimate: 23, 000 psi.
.2 Modulus: 15, 000 psi.

2.4 COUNTERTOP MATERIALS (Cont'd)

.1 (Cont'd)

.2 (Cont'd)

.5 Impact strength: to ASTM D256, 0.68 ft-lbs in.

.6 Tensile strength: to ASTM D638.

.1 Utimate: 22, 000 psi.

.2 Modulus: 17, 000 psi

.7 Rockwell hardness: to ASTM D785, 120.

.8 Water absorption: to ASTM D570, 0.30%.

.9 Direct flame resistance: Bunsen Burner, 3 minutes.

.10 Chemical resistance: To meet requirements as outlined in Part of this Section.

2.5 COUNTERTOP FABRICATION

.1 Fabricate laboratory countertops and splashbacks in accordance with reviewed shop drawings, manufacturer's written instructions and to meet SEFA requirements.

.2 Fabricate laboratory countertops and splashbacks as indicated.

.3 Use specified materials in designated locations.

.4 Fabricate countertop and splashback sections in as long a length as practicable in accordance with reviewed shop drawings.

.5 Cut holes for fittings, accessories, and equipment.

.6 Drip grooves to be provided on the underside at all exposed edges.

.7 All exposed edges to be sanded to a smooth finish and, except as indicated below to be rounded to a 6 mm radius at front top edge and at vertical corners.

.8 Fix work surface panels. Use manufacurer recommended metal screws sized to stop at least 3 mm short of the finished face. Pre-drill panel with an manufacturer recommended high speed drills bit aligned with required clearance holes in the supporting structure.

2.5 COUNTERTOP FABRICATION (Cont'd)

.9 Curbs to be bonded to the top of the work surface to form a square joint.

.10 Cutouts for under-mounted sinks to be routed and sanded to form smooth edged openings with the top edge radiused to approximately 3 mm. The bottom edge of the sink opening to be finished smooth with the edge broken to prevent sharpness. Corners of sink cutouts to be radiused not less than 19 mm. Under-mounted sinks to be supported by brackets blind-fixed to the underside of the work surface.

.11 Finish exposed edges and surfaces in same manner as specified for working surface of countertop material.

.12 Make allowances around periphery and where fixed objects pass through or project into countertop material to permit normal movement without restriction.

.13 Joints: field welded or mechanical watertight.

2.6 LABORATORY SERVICE FITTINGS

.1 Salvaged fittings:
.1 Existing fittings salvaged under Section 02 41 23 are to be reinstalled at existing casework that is to be relocated under work of this Section.
.2 Refer to Contract Drawings for types of fittings.

.2 Metals: use min 80% red brass alloy for valve bodies.
.1 Make handles and turrets of brass forgings.
.2 Use solid brass bar stock or specially selected alloys for assembly components and operating parts such as valve stems, renewable seats and needle cones.

.3 Completely enclose spring mechanisms.
.1 Design compression and needle valve stems to operate inside and make them replaceable.
.2 Include needle valves with stainless steel floating needles and removable seats.

.4 Equip remote controls with universal joints.

2.6 LABORATORY SERVICE FITTINGS (Cont'd)

.5 Include fittings with wall flanges, shanks, lock nuts, couplings, nuts and tailpieces.

.6 Identify fittings as to type of service with coloured plastic removable type buttons with engraved lettering and following colour

SERVICE CODING	LETTERING	COLOUR	
ENGLISH	FRENCH		
Cold Water	CW	EF	Green
Hot Water	HW	EC	Red
Distilled Water	DIW	ED	White
Demineralized Water	DEW	EDEM	White
Vacuum	VAC	VIDE	Yellow
Air	AIR	AIR	Orange
Gas	GAS	GAZ	Yellow-Orange
Oxygen	OXY	OXY	Green
Nitrogen	N	N	Blue
Argon	A	A	White
Steam	ST	VAP	Black

.7 Finish exposed parts of service fittings to ASTM B456, service condition SC 4, coating classification CuNi30dCr.

.8 Provide grey vinyl corrosion resistant finish for service fittings installed inside fume hoods. Corrosion resistant finish to conform to following minimum requirements.

.1 Acid resistance: acid applied at rate of 60 drops per minute for 10 minutes on fixture coatings held approximately at angle of 45 degrees:

.1 Hydrochloric acid: 36.9%.

.2 Nitric acid: 70.6%.

.3 Sulfuric acid: 96.4%.

.4 Acetic acid: 96.4%.

.5 Discolouration and slight bubbling may occur with concentrated sulphuric acid only.

.2 Resistance to alkali and organic solvents: reagents and solvents applied at rate of 60 drops per minute on fixture coatings held approximately at angle of 45 degrees: alkali (50% sodium hydroxide), ethyl alcohol, toluol, xylol, benzol, carbon tetrachloride, phenol and mineral oil.

.3 Resistance to salt fog spray: samples of fixtures placed in salt fog cabinet for period

2.6 LABORATORY SERVICE FITTINGS (Cont'd)

.8 (Cont'd)

.3 Resistance to salt fog spray:(Cont'd) of 125 hrs at temperature of 34-36 degrees C. Artificial sea water (composite per litre : 11 g MgC6HO, 1.2 g NaSO, and 25 g NaC1). Fixtures tested to ASTM B117 for 1000 hours.

.4 Resistance to high humidity: samples of fixtures placed in high humidity cabinet maintained at 100% RH and 50 degrees C for period of 125 hours.

.5 Resistance to acid fumes: samples of fixtures placed in closed cylindrical glass containers approximately 20 L in volume, together with beaker of concentrated hydrochloric acid, nitric acid, and sulphuric acid. Maintain 23 degrees C temperature for period of 150 hours.

2.7 LABORATORY SINKS

.1 Salvaged sinks: Supply of salvaged sinks to be in accordance with Section 02 41 23.

.2 Equip laboratory sinks with tailpieces, cross strainer, plug and overflow unless otherwise indicated.

.3 Provide standing overflow, when in position, 25 mm below flood level of sink. Include perforated over-flow guard with top 12 mm below flood level.

.4 Locate waste outlets where indicated.

.5 Stainless steel sinks (new): to ASTM E54 and ASTM E478, 1.4 mm, type 316 stainless steel, welded construction without solder or fill, exposed surface polished No. 4 finish.

.1 Use self rimming, flush mounted stainless steel sinks occurring in tops other than stainless steel. Include hold down brackets for self rimming sinks.

.2 Apply sound deadening material undercoating to sinks and drainboards.

.3 Include stainless steel waste fittings.

.4 Stainless steel tub sink: Provide stainless steel tub sink in style to match tub sink being relocated for placement into casework. Size of new tub required to be confirmed.

2.7 LABORATORY SINKS (Cont'd)

.6 Cupsinks
.1 Stainless steel cupsinks: one piece spun fabricated, 150 mm diameter, conical shape, complete with hold down clamps, cross strainer, and tail piece.

2.8 ELECTRICAL FITTINGS

.1 Electrical outlets: to applicable NEMA standards and CSA approval.
.1 Boxes for flush mounted outlets: of sufficient size, with galvanized finish.
.2 Surface mounted pedestal type outlets: polished chrome finish housing.
.3 Receptacles, standard blade configuration, grounded, to suit electrical requirements.
.4 Cover plates: No. 4 finish stainless steel.

2.9 CABINET HARDWARE

.1 To match existing cabinet hardware: Provide samples for the approval of the Departmental Representative.

.2 Provide all hardware as required for complete installation of casework.

2.10 FABRICATION

.1 Fabricate steel laboratory casework to details, and in accordance with reviewed shop drawings, manufacturer's written instructions and SEFA requirements, including but not limited to the following components:
.1 Modular support structure.
.2 Structural table base.
.3 Core support structures.
.4 Island core assemblies.
.5 Countertops.
.6 Cabinets.
.7 Doors.
.8 Drawers.
.9 Shelves.
.10 Mobile tables.
.11 Dust top covers.

.2 Align end panels, top rails, bottoms and vertical posts, at intersections in same plane, without overlap.

2.10 FABRICATION (Cont'd)

.3 Grind exposed welds flush and smooth, burnish to match adjacent surfaces.

.4 Standard cabinet gauges: Conform to the following standard steel sheet thicknesses for casework components:
.1 Drawer bodies, shelves, door and drawer liners, removable backs: 0.91 mm (20 ga.).
.2 Cabinet gables, tops, bottoms, toekicks, outer door and drawer front panels, table frames, filler panels, sloping tops: 1.2 mm (18 ga.).
.3 Top and intermdiate channels, table legs, base cabinet rear rail: 1.5 mm (16 ga.).
.4 Drawer suspension, hinge plates, base cabinet top rail: 1.9 mm (14 ga.).
.5 Cabinet leveller support: 3.04 mm (11 ga.).

2.11 MODULAR SUPPORT STRUCTURE

.1 Core or wall system must support work surfaces, under counter cabinets and overhead storage components.

.2 Structural core systems may be configured for floor anchor alone or additional support legs may be used of floor is not of sufficient strength for cantilever support.

.3 Core system to allow plumbing, electrical and other services to be installed using commonly available mounting systems.

.4 Suspended cabinets must be supported using hook shaped rails attached near front and rear of cabinets. It must be possible to remove and relocate a fully loaded cabinet to any position between legs.

.5 All access panels must be fastened with positive friction catch which snap into place. Panel attachment system must not rely on adhesives. Panels must be half width and it must be possible to remove panels without removing suspended cabinets.

.6 Upper storage cabinets must be adjustable vertically and laterally and be removable.

2.11 MODULAR SUPPORT STRUCTURE (Cont'd)

.7 It must be possible to remove and relocate suspended cabinets without disturbing the countertop.

.8 Vertical height of table work surfaces, upper storage units and shelves can be adjusted in 25 mm increments without the use of special tools.

.9 It must be possible to install open shelving both above and below work surface. Shelves from above and below work surface must be interchangeable.

2.12 STRUCTURAL TABLE BASE

.1 Used to attach to core and upright to provide support legs.

.2 Structural table frame must provide channels from which suspended cabinets may be hung.

.3 Weight Capacity: Work Surface plus 600 pounds.

2.13 CORE SUPPORT STRUCTURE

.1 Riser Uprights: 16 Ga. wipe coat galvanised steel (painted). Upright must have slot system allowing for components to be adjusted in 25 mm increments.

.2 Upright connecting members 16 Ga wipe coat galvanised steel.

.3 Base Cover: 18 gauge cold rolled steel.

.4 Riser cap: PVC, ABS or cold rolled steel.

.5 Closure panels: 18 gauge cold rolled steel. Removable panels must be fastened with positive friction catch. Attachment method must not rely on adhesives of any kind.

.6 Floor Mounting Brackets: Two per core assembly. Structural steel angle complete with levelling bolts and mounting holes.

2.14 ISLAND CORE ASSEMBLIES

.1 In sample preparation, island to be made of fixed base cabinets connected together and complete with phenolic top, having no shelves.

.2 End of island as indicated to have a service column to accommodate power from the ceiling. Power is required for two refrigerators at end of island as shown.

.3 Casters: Four per cart assembly, wheels with grey non-marking tire. Each caster must have a 300 pound load rating. Front two casters to be equipped with a modern total lock (locks both wheel rotation and caster swivel). Casters to be attached to extreme corners of the cart base by threading into welded inserts.

.4 Cart base assembly: Cart base assembly must be fabricated from rectangular tube steel of 16 gage wall thickness. Base to be welded together with neat, professional MIG weld fillets. For maximum strength, fillets to be left unground. Mobile cart base to be in a "C" shape with two members across the back and one member at each end. Cart base to be open at front to allow knee space for seated users. Vertical upright attachment members of 600 mm in length to be welded to each end of the "C" shaped base. All open tube ends to be plugged with black plastic plugs.

.5 Slotted vertical uprights to be the same construction and hole pattern as all other furniture in same series. Slotted uprights to be bolted to vertical upright attachment members using four socket head cap screws. Screws to be concealed beneath snap in plugs.

.6 All hanging components attached to vertical uprights to be adjustable in 25 mm increments.

2.15 CABINETS

.1 Construct cabinet bodies of sheet metal, flanged and returned at exposed gables to receive flush mounted drawer fronts and doors.

.2 Flange and set back top rails and bottom panels.

2.15 CABINETS (Cont'd)

.3 At base cabinets include levelling screw for adjusting to floor variations, in gussets and accessible through plugged openings in bottom.

.4 Include removable backs, knee space panels or access doors where piping or wiring occur.

2.16 DOORS

.1 Fabricate doors of double pan construction, telescoped inner pan into outer pan with exposed vertical edge formed into channel shape having returned lip over inner pan, offset to receive lip.

.2 Provide reinforcement for hardware attachment to inner pan and conceal. Install hardware.

.3 Bevel inside edge of cutout in front panel of glass door.

.4 Set glass in continuous rubber gasket between panels.

2.17 DRAWERS

.1 Fabricate drawer fronts of double pan construction, telescoped inner pan with exposed vertical edge formed into channel shape having return lip over inner pan, offset to receive lip.

.2 Weld drawer bodies to front through flanges on sides and bottom, and back through flanges at rear.

.3 Extend flanges outward or downward, top of side and back rolled. Cove corners to 12 mm radius.

.4 Include reinforcements for hardware and install finish hardware.

2.18 SHELVES

.1 Form shelves of steel sheet with front and rear edges flanged down 19 mm and hemmed back at 30 degrees to underside of shelf.

.2 Support shelves with shelf clips inserted in slots in front stile and in formed channel in back.

2.19 MOBILE TABLES

.1 Form mobile tables with table legs and lower frames fabricated from steel tubing.

.2 Tables are complete with phenolic tops, suspended hanging cabinets and wheels.

2.20 DUST COVER TOPS

.1 Provide sloped dust cover tops to wall cabinets where indicated. Return ends where ends are exposed.

.2 Slope dust covers upward 30 degrees from front to back of cabinet.

.3 Attach covers from inside of cabinet.

2.21 FINISHING

.1 Grind and polish spot weld marks from exposed surfaces.

.2 Components to be cleaned in a four-stage chemical spray process that produces an iron phosphate coating bonded to the steel surfaces. Components to be thoroughly oven-dried before painting.

.3 Components to be electrostatically coated with an epoxy/urethane powder applied in a controlled environment then baked/cured in a temperature controlled oven to assure a smooth hard finish. Surface to be a chemical resistant, high quality laboratory grade finish. The resulting paint coating to provide a minimum film thickness of 1.2 mils on all exposed parts and an average film thickness of 1.0 mils on all other surfaces.

.4 Powder coating to meet the following minimum criteria:

.1 Paint adhesion on steel:

.1 To ASTM D2197, Two sets of eleven parallel lines 1.5 mm apart to be cut with a razor blade to intersect at right angles thus forming a grid of 100 squares. The cuts to be made deep enough to go through the coating, but not into the substrate. They must then be brushed lightly with a soft brush for one minute. Examine under 100-foot candles of illumination.

2.21 FINISHING (Cont'd)

.4 (Cont'd)

.1 Paint adhesion on steel:(Cont'd)

.2 Ninety or more of the squares must show finish intact.

.2 Humidity Resistance: No visible effect after a 1000 hour exposure in saturated humidity at 38°C(100°F) per ASTM D2247.

.3 Salt Spray Resistance: No visible effect after a 250 hour salt spray test per ASTM B117.

.4 Chemical resistance: To meet requirements as outlined in Part of this Section.

.5 Colours: To match existing casework colours as indicated.

PART 3 - EXECUTION

3.1 EXAMINATION

.1 Verification of Conditions: verify that conditions of substrate previously installed under other Sections or Contracts are acceptable for steel laboratory casework installation in accordance with manufacturer's written instructions.

.1 Visually inspect substrate in presence of Departmental Representative.

.2 Inform Departmental Representative of unacceptable conditions immediately upon discovery.

.3 Proceed with installation only after unacceptable conditions have been remedied and after receipt of written approval to proceed from Departmental Representative.

3.2 INSTALLATION

.1 Install laboratory casework in accordance with reviewed shop drawings, manufacturer's written instructions and to meet SEFA requirements.

.2 Install laboratory casework plumb with countertops level to 1.5 mm in 3 m.

.3 Bolt existing upper cabinets as indicated to concrete block walls where indicated. Ensure cabinets are installed level, secure and rigid.

3.2 INSTALLATION (Cont'd)

.4 Level base cabinets by adjusting levelling screws.

.5 Fit closure strips and scribe to irregularities of adjacent surfaces, maximum gap opening 0.5 mm.

.6 Support wall cabinets on continuous galvanized steel hanging brackets or by bolting directly to wall.

.7 Bolt adjoining cabinets together, maximum width of joint 1 mm.

.8 Sealant: Apply small bead of sealant at junction of countertop backsplash and adjacent wall finish. Silicone sealant to be applied in accordance with Section 07 90 00.

.9 After installation, adjust operating hardware.

3.3 CLEANING

.1 Progress Cleaning: clean in accordance with Section 01 74 11.
.1 Leave Work area clean at end of each day.

.2 Final Cleaning: upon completion remove surplus materials, rubbish, tools and equipment in accordance with Section 01 74 11.
.1 Touch up marred or abraded finished surfaces.
.2 Wipe down surfaces to remove fingerprints and markings.

.3 Waste Management: separate waste materials for reuse and recycling in accordance with Section 01 74 20.
.1 Remove recycling containers and bins from site and dispose of materials at appropriate facility.

3.4 PROTECTION

.1 Protect installed products and components from damage during construction.

.2 Repair damage to adjacent materials caused by steel laboratory casework installation.

END

PART 1 GENERAL

1.1 GENERAL

.1 This section covers items common to all sections of Division 21, 22, 23 & 25.

1.2 SCOPE OF WORK

.1 The work of this section includes all labour, materials, and equipment necessary for the complete installation of the mechanical systems shown on the drawings and described in these specifications.

.2 It is the requirement of this work to provide all systems complete, functioning in intended system operation, notwithstanding that every item necessarily required may not be specifically mentioned.

1.3 ACTION AND INFORMATIONAL SUBMITTALS

.1 Submit in accordance with Section 01 33 00 - Submittal Procedures.

.2 Product Data:

.1 Submit manufacturer's instructions, printed product literature and data sheets for mechanical equipment and include product characteristics, performance criteria, physical size, finish and limitations.

.3 Shop drawings:

.1 Submit drawings stamped and signed by professional engineer registered or licensed in the Province of Ontario, Canada.

.2 Drawings to show:

.1 Mounting arrangements.

.2 Operating and maintenance clearances.

.3 Drawings and product data accompanied by:

.1 Detailed drawings of bases, supports, and anchor bolts.

.2 Acoustical sound power data, where applicable.

.3 Points of operation on performance curves.

.4 Manufacturer to certify current model production.

.5 Certification of compliance to applicable codes.

1.4 CLOSEOUT SUBMITTALS

.1 Submit in accordance with Section 01 78 00 - Closeout Submittals.

.2 Operation and Maintenance Data: submit operation and maintenance data for mechanical equipment for incorporation into manual.

.1 Operation and maintenance manual approved by Owner, and final copies deposited with Owner before final inspection.

.2 Operation data to include:

.1 Control schematics for systems including environmental controls.

.2 Description of systems and their controls.

.3 Description of operation of systems at various loads together with reset schedules and seasonal variances.

.4 Operation instruction for systems and component.

.5 Description of actions to be taken in event of equipment failure.

.6 Valves schedule and flow diagram.

.7 Colour coding chart.

.3 Maintenance data to include:

.1 Servicing, maintenance, operation and trouble-shooting instructions for each item of equipment.

.2 Data to include schedules of tasks, frequency, tools required and task time.

.4 Performance data to include:

.1 Equipment manufacturer's performance datasheets with point of operation as left after commissioning is complete.

.2 Equipment performance verification test results.

.3 Special performance data as specified.

.4 Testing, adjusting and balancing reports as specified in Section 23 05 93 - Testing, Adjusting and Balancing for HVAC.

.5 Approvals:

.1 Submit 2 copies of draft Operation and Maintenance Manual to Owner for approval. Submission of individual data will not be accepted unless directed by Owner.

.2 Make changes as required and re-submit as directed by Owner.

.6 Additional data:

.1 Prepare and insert into operation and maintenance manual additional data when need for it becomes apparent during specified demonstrations and instructions.

.7 Site records:

.1 Owner will provide 1 set of reproducible mechanical drawings. Provide sets of white prints as required for each phase of work. Mark changes as work progresses and as changes occur.

.2 Transfer information weekly to reproducibles, revising reproducibles to show work as actually installed.

.3 Use different colour waterproof ink for each service.

.4 Make available for reference purposes and inspection.

.8 As-Built drawings:

.1 Prior to start of Testing, Adjusting and Balancing for HVAC, finalize production of as-built drawings.

.2 Identify each drawing in lower right hand corner in letters at least 12 mm high as follows: "AS BUILT DRAWINGS: THIS DRAWING HAS BEEN REVISED TO SHOW MECHANICAL SYSTEMS AS INSTALLED" (Signature of Contractor) (Date).

.3 Submit Owner for approval and make corrections as directed.

.4 Perform testing, adjusting and balancing for HVAC using as-built drawings.

.5 Submit completed reproducible as-built drawings with Operating and Maintenance Manuals.

.9 Submit copies of as-built drawings for inclusion in final TAB report.

1.5 MAINTENANCE MATERIAL SUBMITTALS

.1 Submit in accordance with Section 01 78 00 - Closeout Submittals.

.2 Furnish spare parts as follows:

.1 One set of packing for each pump.

.2 One casing joint gasket for each size pump.

.3 One head gasket set for each heat exchanger.

.4 One glass for each gauge glass.

.5 One filter cartridge or set of filter media for each filter or filter bank in addition to final operating set.

.3 Provide one set of special tools required to service equipment as recommended by manufacturers.

.4 Furnish one commercial quality grease gun, grease and adapters to suit different types of grease and grease fittings.

1.6 DELIVERY, STORAGE AND HANDLING

.1 Deliver, store and handle materials in accordance with Section 01 61 00 - Common Product Requirements.

.2 Delivery and Acceptance Requirements: deliver materials to site in original factory packaging, labelled with manufacturer's name and address.

.3 Storage and Handling Requirements:

.1 Store materials in accordance with manufacturer's recommendations in clean, dry, well-ventilated area.

.2 Store and protect equipment/materials from nicks, scratches, and blemishes.

.3 Replace defective or damaged materials with new.

PART 2 PRODUCTS

1.7 MATERIALS

.1 HVAC R Equipment:

.1 Refrigerant:

.1 Non CFC based refrigerant.

.2 EXAMINATION

.2 Verification of Conditions: verify that conditions of substrate previously installed under other Sections or Contracts are acceptable for equipment installation in accordance with manufacturer's written instructions.

.1 Visually inspect substrate in presence of Owner.

.2 Inform Owner of unacceptable conditions immediately upon discovery.

.3 Proceed with installation only after unacceptable conditions have been remedied.

1.8 PAINTING REPAIRS AND RESTORATION

.1 Do painting in accordance with Section 09 91 23 - Interior Painting.

.2 Prime and touch up marred finished paintwork to match original.

.3 Restore to new condition, finishes which have been damaged.

1.9 FIELD QUALITY CONTROL

.1 Site Tests: conduct following tests in accordance with Section 01 45 00 - Quality Control and submit report as described in PART 1 - ACTION AND INFORMATIONAL SUBMITTALS.

.2 Manufacturer's Field Services:

.1 Obtain written report from manufacturer verifying compliance of Work, in handling, installing, applying, protecting and cleaning of product and submit Manufacturer's Field Reports as described in PART 1 - ACTION AND INFORMATIONAL SUBMITTALS.

.2 Provide manufacturer's field services consisting of product use recommendations and periodic site visits for inspection of product installation in accordance with manufacturer's

instructions.

1.10 DEMONSTRATION

.1 Owner will use equipment and systems for test purposes prior to acceptance. Supply labour, material, and instruments required for testing.

.2 Trial usage to apply to following equipment and systems:

.1 HVAC

.2 Domestic Water

.3 Fire Suppression

.3 Supply tools, equipment and personnel to demonstrate and instruct operating and maintenance personnel in operating, controlling, adjusting, trouble-shooting and servicing of all systems and equipment during regular work hours, prior to acceptance.

.4 Use operation and maintenance manual, as-built drawings, and audio visual aids as part of instruction materials.

.5 Instruction duration time requirements as specified in appropriate sections.

.6 Contractor will record these demonstrations on video tape for future reference.

1.11 CLEANING

.1 Progress Cleaning: clean in accordance with Section 01 74 11 - Cleaning.

.1 Leave Work area clean at end of each day.

.2 Final Cleaning: upon completion remove surplus materials, rubbish, tools and equipment in accordance with Section 01 74 11 - Cleaning.

1.12 PROTECTION

.1 Protect equipment and systems openings from dirt, dust, and other foreign materials with materials appropriate to system,

END OF SECTION

PART 1 GENERAL

1.1 REFERENCES

.1 National Code

.1 The National Fire Code of Canada (NFCC) – 2010 and all documents reference therein.

.2 National Fire Prevention Association (NFPA)

.1 NFPA 13-2013, Standard for the Installation of Sprinkler Systems.

.2 NFPA 24-2013, Standard for the Installation of Private Fire Service Mains and Their Appurtenances.

.3 NFPA 25-2014, Standard for the Inspection, Testing, and Maintenance of Water-Based Fire Protection Systems.

.3 Underwriter's Laboratories of Canada (ULC)

.1 CAN4 S543-M984, Standard for Internal Lug Quick Connect Couplings for Fire Hose.

1.2 ACTION AND INFORMATIONAL SUBMITTALS

.1 Provide submittals in accordance with Section 01 33 00 - Submittal Procedures.

.2 Product Data:

.1 Provide manufacturer's printed product literature and data sheets, and include product characteristics, performance criteria, physical size, finish and limitations.

.3 Shop Drawings:

.1 Submit drawings stamped and signed by professional engineer registered or licensed in the Province of Ontario, Canada.

.2 Indicate:

.1 Materials.

.2 Finishes.

.3 Method of anchorage

.4 Number of anchors.

.5 Supports.

.6 Reinforcement.

.7 Assembly details.

.8 Accessories.

.4 Samples:

.1 If requested by Owner submit samples of following:

.1 Each type of sprinkler head.

.2 Signs.

.5 Test reports:

.1 Submit certified test reports for wet pipe fire protection sprinkler systems from approved independent testing laboratories, indicating compliance with specifications for specified performance characteristics and physical properties.

.6 Certificates:

.1 Submit certificates signed by manufacturer certifying that materials comply with specified performance characteristics and physical properties.

.7 Manufacturers' Instructions:

.1 Provide manufacturer's installation instructions.

.8 Field Quality Control Submittals:

.1 Manufacturer's Field Reports: manufacturer's field reports specified.

1.3 CLOSEOUT SUBMITTALS

.1 Provide operation, maintenance and engineering data for incorporation into manual specified in Section 01 78 00 - Closeout Submittals in accordance with ANSI/NFPA 13.

.2 Manufacturer's Catalog Data, including specific model, type, and size for:

.1 Pipe and fittings.

.2 Sprinkler heads.

.3 Pipe hangers and supports.

.4 Mechanical couplings.

.3 Drawings:

.1 Sprinkler heads and piping system layout.

.1 Prepare 760 mm by 1050 mm detail

working drawings of system layout in accordance with NFPA 13, "Working Drawings".

.2 Show data essential for proper installation of each system.

.3 Show details, plan view, elevations, and sections of systems supply and piping.

.4 Show piping schematic of systems supply, devices, valves, pipe, and fittings. Show point to point electrical wiring diagrams.

.2 Electrical wiring diagrams.

.4 Design Data:

.1 Calculations of sprinkler system design.

.2 Indicate type and design of each system and certify that each system has performed satisfactorily in the manner intended for not less than 18 months.

.5 Field Test Reports:

.1 Preliminary tests on piping system.

.6 Records:

.1 As-built drawings of each system.

.1 After completion, but before final acceptance, submit complete set of as-built drawings of each system for record purposes.

.2 Submit 760 mm by 1050 mm drawings on reproducible Mylar film with title block similar to full size contract drawings.

.7 Operation and Maintenance Manuals:

.1 Provide detailed hydraulic calculations including summary sheet, and Material and Test Certificate for aboveground &underground piping and other documentation for incorporation into manual in accordance with NFPA 13.

1.4 QUALITY ASSURANCE

.1 Qualifications:

.1 Installer: company or person specializing in wet sprinkler systems with documented experience.

.2 Supply grooved joint couplings, fittings, valves, grooving tools and specialties from a single manufacturer. Use date stamped castings for coupling housings, fittings, valve bodies, for quality assurance and traceability.

1.5 MAINTENANCE MATERIAL SUBMITTALS

.1 Extra Materials:

.1 Provide maintenance materials in accordance with Section 01 78 00 - Closeout Submittals.

.2 Provide spare sprinklers and tools in accordance with NFPA 13.

1.6 DELIVERY, STORAGE AND HANDLING

.1 Deliver, store and handle materials in accordance with Section 01 61 00 - Common Product Requirements.

.2 Delivery and Acceptance Requirements:

.1 Deliver materials to site in original factory packaging, labelled with manufacturer's name, address.

.3 Storage and Protection:

.1 Store materials indoors in dry location.

.2 Store and protect materials from exposure to harmful weather conditions and at temperature and humidity conditions recommended by manufacturer.

PART 2 PRODUCTS

1.7 DESIGN REQUIREMENTS

.1 Design automatic wet pipe fire suppression sprinkler systems in accordance with required and advisory provisions of NFPA 13, by hydraulic calculations for uniform distribution of water over design area and allowance for ordinary and extra hazard occupancies.

.2 Include with each system materials, accessories, and equipment inside and outside building to provide each system complete and ready for use.

.3 Contractor is to provide detailed shop

drawings that are coordinated with all obstructions and equipment. These shop drawings are to be reviewed and stamped by a Professional Engineer registered in the Province of Ontario.

.4 Locate sprinkler heads in consistent pattern with ceiling grid, lights, and air supply diffusers.

.5 Devices and equipment for fire protection service: ULC approved for use in wet pipe sprinkler systems.

.6 Location of Sprinkler Heads:

.1 Locate heads in relation to ceiling and spacing of sprinkler heads not to exceed that permitted by NFPA 13 for ordinary and extra hazard occupancy per head. Uniformly space sprinklers on branch.

.7 Water Distribution:

.1 Make distribution uniform throughout the area in which sprinkler heads will open.

.8 Sprinkler Discharge Area:

.1 Area: hydraulically most remote area as defined in NFPA 13.

.9 Outside Hose Allowances:

.1 Include allowance in hydraulic calculations of flow capacity for outside hose streams as defined in NFPA 13.

.10 Friction Losses:

.1 Calculate losses in piping in accordance with Hazen-Williams formula with 'C' value of 120 for steel piping, 150 for copper tubing, and 140 for cement-lined ductile-iron piping.

.11 Water Supply:

.1 Base hydraulic calculations on available water supply flow and pressure. Submit static and flow rates and residual pressures used for base hydraulic calculations for approval by Owner. Contractor to obtain the above required information from site measurement.

.12 All new automatic sprinkler systems shall be hydraulically designed using water supply test data obtained by testing to NFPA 291 Recommended Practice for Fire Flow Testing and Marking of Hydrants. Tests shall be conducted by, or under the direct supervision of, the sprinkler system designer. The sprinkler system must be hydraulically designed using hydrant flow data that is not more than 12 months in age.

.1 New Hydrant Flow test to be performed by sprinkler contractor under supervision of sprinkler system designer to validate available flow as required by NFPA-13 (2013)

1.8 ABOVE GROUND PIPING SYSTEMS

.1 Provide fittings for changes in direction of piping and for connections.

.1 Make changes in piping sizes through tapered reducing pipe fittings, bushings will be permitted.

.2 Perform welding in shop; field welding will not be permitted.

.3 Conceal piping in areas with suspended ceiling.

1.9 PIPE, FITTINGS AND VALVES

.1 Pipe:

.1 Ferrous: to NFPA 13.

.2 Copper tube: to NFPA 13.

.2 Fittings and joints to NFPA 13:

.1 Ferrous: screwed, welded, flanged or roll grooved.

.1 Grooved joints designed with two ductile iron housing segments, pressure responsive gasket, and zinc-electroplated steel bolts and nuts. Cast with offsetting angle-pattern bolt pads for rigidity and visual pad-to-pad offset contact.

.2 Copper tube: screwed, soldered, brazed, grooved.

.3 Provide welded, threaded, grooved-end type fittings into which sprinkler

heads, sprinkler head riser nipples, or drop nipples are threaded.

.4 Plain-end fittings with mechanical couplings and fittings which use steel gripping devices to bite into pipe when pressure is applied will not be permitted.

.5 Rubber gasketted grooved-end pipe and fittings with mechanical couplings are permitted in pipe sizes 32 mm and larger.

.6 Fittings: ULC approved for use in wet pipe sprinkler systems.

.7 Ensure fittings, mechanical couplings, and rubber gaskets are supplied by same manufacturer.

.8 Side outlet tees using rubber gasketted fittings are not permitted.

.9 Sprinkler pipe and fittings: metal.

.3 Valves:

.1 ULC listed for fire protection service.

.2 Gate valves: open by counter-clockwise rotation.

.3 Provide OS & Y valve beneath each alarm valve in each riser when more than one alarm valve is supplied from the same water supply pipe.

.4 Check valves: flanged clear opening swing or spring actuated check type with flanged inspection and access cover plate for sizes 10 cm and larger.

.4 Pipe hangers:

.1 ULC listed for fire protection services in accordance with NFPA.

1.10 SPRINKLER HEADS

.1 General: to NFPA 13 and ULC listed for fire services.

.2 Provide nominal 1.2 cm orifice sprinkler heads.

.1 Release element of each head to be of intermediate temperature rating or higher as suitable for specific application.

.2 Provide polished stainless steel ceiling

plates or chromium-plated finish on copper alloy ceiling plates, and chromium-plated pendant sprinklers below suspended ceilings.

.3 Provide corrosion-resistant sprinkler heads and sprinkler head guards in accordance with NFPA 13.

.4 Provide sprinkler heads as required.

.5 Deflector: not more than 75 mm below suspended ceilings.

.6 Ceiling plates: not more than 25 mm deep.

.7 Ceiling cups: not permitted.

1.11 PIPE SLEEVES

.1 Sleeves shall only be used in concrete block and cast-in-place concrete assemblies and then only if the sleeve is built in to the assembly. Sleeves shall not be installed where penetrations are made following construction of an assembly. Sleeves shall be finished flush with the fire separation unless a specific fire-stop system requires otherwise. Secure sleeves in position and location during construction.

.2 Provide sleeves of sufficient length to pass through entire thickness of walls, floors, roofs.

.3 All fire-stopping work: Reference section 07 84 00

.4 Provide 2.5 cm minimum clearance between exterior of piping and interior of sleeve or core-drilled hole.

.1 Firmly pack space with mineral wool insulation.

.2 Seal space at both ends of sleeve or core-drilled hole with plastic waterproof cement which will dry to firm but pliable mass, provide mechanically adjustable segmented elastomeric seal.

.3 In fire walls and fire floors, seal both ends of pipe sleeves or core-drilled holes with ULC listed fill, void, or cavity material.

.5 Sleeves in Masonry and Concrete Walls,

Floors, and Roofs:

.1 Provide hot-dip galvanized steel.

.2 Core drilling of masonry and concrete may be provided in lieu of pipe sleeves when cavities in core-drilled hole are completely grouted smooth.

.6 Sleeves in Other than Masonry and Concrete Walls, Floors, and Roofs:

.1 Provide 0.61 mm thick galvanized steel sheet.

1.12 ESCUTCHEON PLATES

.1 Provide one piece type metal plates for piping passing through walls, floors, ceilings in exposed spaces.

.2 Provide polished chromium-plated finish on copper alloy plates in finished spaces.

.3 Provide paint finish on metal plates in unfinished spaces.

PART 3 EXECUTION

1.13 MANUFACTURER 'S INSTRUCTIONS

.1 Compliance: comply with manufacturer's written recommendations or specifications, including product technical bulletins, handling, storage and installation instructions, and datasheet.

1.14 INSTALLATION

.1 Install, inspect and test to acceptance in accordance with NFPA 13, NFPA 25.

1.15 PIPE INSTALLATION

.1 Install piping straight and true to bear evenly on hangers and supports. Do not hang piping from plaster ceilings.

.2 Keep interior and ends of new piping and existing piping thoroughly cleaned of water and foreign matter.

.3 Keep piping systems clean during installation by means of plugs or other approved methods. When work is not in progress, securely close open ends of piping to prevent entry of water and foreign matter.

.4 Inspect piping before placing into position.

1.16 ELECTRICAL CONNECTIONS

.1 Provide electrical work associated with this section under Section 26 05 00 - Common Work Results for Electrical.

.2 Provide fire alarm system under Section 28 31 00 - Fire Detection and Alarm.

.3 Provide control and fire alarm wiring, including connections to fire alarm systems, in accordance with Canadian Electrical Code.

.4 Provide wiring in rigid metal conduit or intermediate metal conduit.

1.17 DISINFECTION

.1 Disinfect new piping.

.2 Fill piping systems with solution containing minimum of 50 parts per million of chlorine and allow solution to stand for minimum of 24 hours.

.3 Flush solution from systems with clean water until maximum residual chlorine content is not greater than 0.2 part per million or residual chlorine content of domestic water supply.

.4 Obtain at least two consecutive satisfactory bacteriological samples from piping, analyzed by certified laboratory, and submit results prior to piping being placed into service.

1.18 FIELD PAINTING

.1 Clean, pre-treat, prime, and paint new systems including valves, piping, conduit, hangers, supports, miscellaneous metalwork, and accessories.

.2 Apply coatings to clean, dry surfaces, using clean brushes.

.3 Clean surfaces to remove dust, dirt, rust, and loose mill scale.

.4 Immediately after cleaning, provide metal surfaces with 1 coat of pre-treatment primer applied to minimum dry film thickness of 0.3 ml, and one coat of zinc chromate primer applied to minimum dry film thickness of 1.0 ml.

.5 Shield sprinkler heads with protective covering while painting is in progress.

.6 Upon completion of painting, remove protective covering from sprinkler heads.

.7 Remove sprinkler heads which have been painted and replace with new sprinkler heads.

.8 Provide primed surfaces with following:

.1 Piping in Finished Areas:

.1 Provide primed surfaces with 2 coats of paint to match adjacent surfaces.

.2 Provide valves and operating accessories with 1 coat of red alkyd gloss enamel applied to minimum dry film thickness of 1.0 mil.

.3 Provide piping with self-adhering red plastic bands spaced at maximum of 6 m intervals throughout piping systems.

.2 Piping in Unfinished Areas:

.1 Provide primed surfaces with one coat of red alkyd gloss enamel applied to minimum dry film thickness of 1.0 mil in attic spaces, spaces above suspended ceilings, crawl spaces, pipe chases, mechanical equipment room, spaces where walls or ceiling are not painted or not constructed of a prefinished material.

.2 Provide piping with self-adhering red plastic bands spaced at maximum of 6 m intervals.

1.19 FIELD QUALITY CONTROL

.1 Site Test, Inspection:

.1 Perform test to determine compliance with specified requirements in presence of Owner.

.2 Test, inspect, and approve piping before covering or concealing.

.3 Preliminary Tests:

.1 Hydrostatically test each system at 1379 kPa for a 2 hour period

with no leakage or reduction in pressure.

.2 Flush piping with potable water in accordance with NFPA 13.

.3 Piping above suspended ceilings: tested, inspected, and approved before installation of ceilings.

.4 Test alarms and other devices.

.4 Formal Tests and Inspections:

.1 Do not submit request for formal test and inspection until preliminary test and corrections are completed and approved.

.2 Submit written request for formal inspection at least 15 days prior to inspection date.

.3 Repeat required tests as directed.

.4 Correct defects and make additional tests until systems comply with contract requirements.

.5 Furnish appliances, equipment, instruments, connecting devices, personnel for tests.

.6 Authority of Jurisdiction, will witness formal tests and approve systems before they are accepted.

.2 Manufacturer's Field Services:

.1 Obtain written report from manufacturer verifying compliance of Work, in handling, installing, applying, protecting and cleaning of product and submit Manufacturer's Field Reports as described in PART 1 - ACTION AND INFORMATIONAL SUBMITTALS.

.2 Provide manufacturer's field services consisting of product use recommendations and periodic site visits for inspection of product installation in accordance with manufacturer's instructions.

.3 Schedule site visits, to review Work, as directed in PART 1 - QUALITY ASSURANCE.

.3 Site Tests:

.1 Develop, with Owner assistance, detailed

instructions for O&M of this installation.

.2 Provide provision for the collection and disposal of the foam solution during the acceptance and commissioning tests required for the foam system.

.3 Verification requirements in accordance with:

.1 Materials and resources.

.2 Storage and collection of recyclables.

.3 Construction waste management.

.4 Resource reuse.

.5 Recycled content.

.6 Local/regional materials.

.7 Low-emitting materials.

.4 CLEANING

.1 Clean in accordance with Section 01 74 11 - Cleaning.

.1 Remove surplus materials, excess materials, rubbish, tools and equipment.

END OF SECTION

PART 1 GENERAL

1.1 SECTION INCLUDES

.1 Materials and installation for copper domestic water service used in the following:

.1 Copper incoming domestic water service, up to NPS 2 1/2.

.2 Hard drawn copper domestic hot and cold water and NPW (Rainwater Harvest) services inside building.

.3 Soft copper tubing inside building.

.4 Soft copper buried tubing outside building, as in between potable water source and meter inside building.

.2 Sustainable requirements for construction, verification and operation.

.1 See General Specs.

1.2 RELATED SECTIONS

.1 Section 01 91 01 - Commissioning.

.2 Section 33 11 16 - Site Water Utility Distribution Piping.

.3 Section 21 05 01 - Common Work Results for Mechanical.

.4 Section 23 05 05 - Installation of Pipework.

.5 Section 23 05 23.01 - Valves - Bronze.

.6 Section 23 05 23.02 Valves - Cast Iron: Gate, Globe, Check.

.7 Section 23 05 93 - Testing, Adjusting and Balancing for HVAC.

1.3 REFERENCES

.1 American National Standards Institute (ANSI)/American Society of Mechanical Engineers International (ASME).

.1 ANSI/ASME B16.15-02, Cast Bronze Threaded Fittings, Classes 125 and 250.

.2 ANSI/ASME B16.18-01, Cast Copper Alloy Solder Joint Pressure Fittings.

.3 ANSI/ASME B16.22-01, Wrought Copper and Copper Alloy Solder Joint Pressure

Fittings.

.4 ANSI/ASME B16.24-01, Cast Copper Alloy Pipe Flanges and Flanged Fittings, Class 150, 300, 400, 600, 900, 1500 and 2500.

.2 American Society for Testing and Materials International, (ASTM).

.1 ASTM A307-03, Standard Specification for Carbon Steel Bolts and Studs, 60,000 PSI Tensile Strength.

.2 ASTM B88M-03, Standard Specification for Seamless Copper Water Tube (Metric).

.3 ASTM F492-95, Standard Specification for Propylene and Polypropylene (PP) Plastic-Lined Ferrous Metal Pipe and Fittings.

.4 ASTM A536-84 (1999)e1, Standard Specification for Ductile Iron Castings.

.3 American Water Works Association (AWWA).

.1 AWWA C111-00, Rubber-Gasket Joints for Ductile-Iron Pressure Pipe and Fittings.

.2 AWWA C606-97, Grooved and Shouldered Joints.

.4 Canadian Standards Association (CSA International).

.1 CSA B242-M1980 (R1998), Groove and Shoulder Type Mechanical Pipe Couplings.

.5 Department of Justice Canada (Jus).

.1 Canadian Environmental Protection Act, 1999, c. 33 (CEPA).

.6 Health Canada/Workplace Hazardous Materials Information System (WHMIS).

.1 Material Safety Data Sheets (MSDS).

.7 Manufacturer's Standardization Society of the Valve and Fittings Industry (MSS).

.1 MSS-SP-67-02, Butterfly Valves.

.2 MSS-SP-70-98, Cast Iron Gate Valves, Flanged and Threaded Ends.

.3 MSS-SP-71-97, Cast Iron Swing Check Valves, Flanged and Threaded Ends.

.4 MSS-SP-80-03, Bronze Gate, Globe, Angle and Check Valves.

.8 National Research Council (NRC)/Institute for Research in Construction.

.1 NRCC 38728, National Plumbing Code of Canada (NPC) - 1995.

1.4 SUBMITTALS

.1 Submittals in accordance with Section 01 33 00 - Submittal Procedures.

.2 Submit product data for all valves, pipe and equipment.

.3 Submit WHMIS MSDS - Material Safety Data Sheets in accordance with Section 02 62 00.01 - Hazardous Materials and Section 01 47 15 - Sustainable Requirements: Construction.

.4 Provide maintenance data for incorporation into manual specified in Section 01 78 00 - Closeout Submittals.

1.5 HEALTH AND SAFETY

.1 Do construction occupational health and safety in accordance with Section 01 70 12 - Health and Safety Requirements.

1.6 WASTE MANAGEMENT AND DISPOSAL

.1 Separate waste materials for reuse and recycling in accordance with Section 01 74 21 - Construction/Demolition Waste Management and Disposal.

.2 Remove from site and dispose of packaging materials at appropriate recycling facilities.

.3 Separate for reuse and recycling and place in designated containers Steel, Metal, Plastic waste in accordance with Waste Management Plan.

.4 Place materials defined as hazardous or toxic in designated containers.

.5 Handle and dispose of hazardous materials in accordance with CEPA, TDGA, Regional and Municipal

regulations.

.6 Fold up metal banding, flatten and place in designated area for recycling.

PART 2 PRODUCTS

1.7 PIPING

.1 Domestic hot, cold water, within building.

.1 Above ground: copper tube, hard drawn, type L: to ASTM B88M.

1.8 FITTINGS

.1 Bronze pipe flanges and flanged fittings, Class 150: to ANSI/ASME B16.24.

.2 Cast bronze threaded fittings, Class 125: to ANSI/ASME B16.15.

.3 Cast copper, ANSI/ASME B16.18 or wrought copper, ANSI/ASME B16.22; with 301 stainless steel internal components, EPDM seal, and push-to-connect joints.

.4 Wrought copper and copper alloy, solder type: to ANSI/ASME B16.22.

.5 NPS 2 and larger: roll grooved to CSA B242. Cast bronze to ANSI/ASME B16.18 or wrought copper ANSI/ASME B16.22.

.1 Fittings shall be manufactured to copper-tube dimensions. (Flaring of tube or fitting ends to accommodate IPS sized couplings is not permitted.)

1.9 JOINTS

.1 Rubber gaskets, 1.6 mm thick: to AWWA C111.

.2 Bolts, nuts, hex head and washers: to ASTM A307, heavy series.

.3 Solder: 95/5 tin copper alloy.

.4 Push-to-connect: EPDM gasket, UL classified in accordance with ANSI/NSF-61 for potable water service.

.5 Teflon tape: for threaded joints.

.6 Grooved couplings: designed with angle bolt pads to provide rigid joint, complete with EPDM flush seal gasket.

.7 Dielectric connections between dissimilar metals: dielectric fitting to ASTM F492, complete with thermoplastic liner.

1.10 GATE VALVES

.1 NPS 2 and under, soldered:

.1 Rising stem: to MSS-SP-80, Class 125, 860 kPa, bronze body, screw-in bonnet, solid wedge disc as specified Section 23 05 23.01 - Valves - Bronze.

.2 NPS 2 and under, screwed:

.1 Rising stem: to MSS-SP-80, Class 125, 860 kPa, bronze body, screw-in bonnet, solid wedge disc as specified Section 23 05 23.01 - Valves - Bronze.

.3 NPS 2-1/2 and over, flanged:

.1 Rising stem: to MSS-SP-70, Class 125, 860 kPa, flat flange faces, cast-iron body, OS&Y bronze trim specified Section 23 05 23.02 - Valves - Cast Iron.

1.11 SWING CHECK VALVES

.1 NPS 2 and under, soldered:

.1 To MSS-SP-80, Class 125, 860 kPa, bronze body, bronze swing disc, screw in cap, regrindable seat as specified Section 23 05 23.01 - Valves - Bronze.

.2 NPS 2 and under, screwed:

.1 To MSS-SP-80, Class 125, 860 kPa, bronze body, bronze swing disc, screw in cap, regrindable seat as specified Section 23 05 23.01 - Valves - Bronze.

.3 NPS 2 and under, push-to-connect, lift-disc type:

.1 To MSS-SP-80, 200 psig (1380 kPa) CWP, bronze body, stainless steel disc, spring, and shaft, suitable for installation in horizontal or vertical lines.

.4 NPS 2-1/2 and over, flanged:

.1 To MSS-SP-71, Class 125, 860 kPa, cast iron body, flat flange faces, renewable seat, bronze disc, bolted cap specified Section 23 05 23.02 - Valves - Cast Iron: Gate, Globe, Check.

1.12 BALL VALVES

.1 NPS 2 and under, screwed:

.1 Class 150.

.2 Bronze body, chrome plated brass ball, PTFE adjustable packing, brass gland and PTFE seat, steel lever handle as specified Section 23 05 23.01 - Valves - Bronze.

.2 NPS 2 and under, push-to-connect:

.1 1379 kPa CWP.

.2 Bronze body, full port chrome plated brass ball, TFE packing, reinforced TFE seat, steel lever handle as specified Section 23 05 22 - Valves - Bronze.

.3 Victaulic PermaLynx PL-300-SL.

.3 NPS 2 and under, soldered:

.1 To ANSI/ASME B16.18, Class 150.

.2 Bronze body, chrome plated brass or stainless steel ball, PTFE adjustable packing, brass gland and PTFE or BunaN seat, steel lever handle, with NPT to copper adaptors as specified Section 23 05 23.01 - Valves - Bronze.

1.13 BUTTERFLY VALVES

.1 NPS 2-1/2 and over, lug:

.1 To MSS-SP-67, Class 200.

.2 Cast iron body, ductile iron chrome plated disc, stainless steel stem, EPT liner.

.3 Lever operated.

.2 NPS 2-1/2 and over, grooved ends:

.1 Class 2068 kPa CWP, bubble tight shut-off, cast bronze body.

EPDM encapsulated ductile iron disc. (ANSI/NSF-61 approved.)

Copper-tube dimensioned grooved ends.

.2 Operator:

.1 NPS 4 and under: lever handle.

.2 NPS 6 and over: gear operated.

PART 3 EXECUTION

1.14 INSTALLATION

.1 Install in accordance with NPC Provinces Plumbing Code and local authority having jurisdiction.

.2 Install pipe work in accordance with Section 23 05 05 - Installation of Pipework, supplemented as specified herein.

.3 Assemble piping using fittings manufactured to ANSI standards.

.4 Grooved joint couplings and fittings shall be installed in accordance with the manufacturer’s written installation instructions. Grooved ends shall be clean and free from indentations, projections, and roll marks in the area from pipe end to groove.

.5 Gaskets shall be verified as suitable for the intended service prior to installation. Gaskets shall be molded and produced by the coupling manufacturer. The grooved coupling manufacturer’s factory trained representative shall provide on-site training for contractor’s field personnel in the use of grooving tools, application of groove, and installation of grooved joint products. The manufacturer’s representative shall periodically visit the jobsite and review installation. Contractor shall remove and replace any joints deemed improperly installed.

.6 Install CWS piping below and away from HWS and HWC and other hot piping so as to maintain temperature of cold water as low as possible.

.7 Connect to fixtures and equipment in accordance with manufacturer's written instructions unless otherwise indicated.

1.15 VALVES

.1 Isolate equipment, fixtures and branches with gate butterfly ball valves.

.2 Balance recirculation system using lock shield globe valves. Mark settings and record on as-built drawings on completion.

1.16 PRESSURE TESTS

.1 Conform to requirements of Section 21 05 01 - Common Work Results for Mechanical.

.2 Test pressure: greater of 1 times maximum system operating pressure or 860 kPa. for 24 hours, no appreciable loss.

1.17 FLUSHING AND CLEANING

.1 Flush entire system for 8 h. Ensure outlets flushed for 2 h. Let stand for 24 h, then draw one sample off longest run. Submit to testing laboratory to verify that system is clean copper to Provincial potable water guidelines. Let system flush for additional 2 h, then draw off another sample for testing.

1.18 PRE-START-UP INSPECTIONS

.1 Systems to be complete, prior to flushing, testing and start-up.

.2 Verify that system can be completely drained.

.3 Ensure that pressure booster systems are operating properly.

.4 Ensure that air chambers, expansion compensators are installed properly.

1.19 DISINFECTION

.1 Flush out, disinfect and rinse system to requirements of authority having jurisdiction.

.2 Coordinate with Section 33 11 16.01 - Site Water Utility Distribution Piping and Section 33 11 16 - Incoming Site Water Utility Distribution Piping.

.3 Upon completion, provide laboratory test reports on water quality for Owner approval.

1.20 START-UP

.1 Timing: Start up after:

.1 Pressure tests have been completed.

.2 Disinfection procedures have been completed.

.3 Certificate of static completion has been issued.

.4 Water treatment systems operational.

.2 Provide continuous supervision during start-up.

.3 Start-up procedures:

.1 Establish circulation and ensure that air is eliminated.

.2 Check pressurization to ensure proper operation and to prevent water hammer, flashing and/or cavitation.

.3 Bring HWS storage tank up to design temperature slowly.

.4 Monitor piping HWS and HWC piping systems for freedom of movement, pipe expansion as designed.

.5 Check control, limit, safety devices for normal and safe operation.

.4 Rectify start-up deficiencies.

1.21 PERFORMANCE VERIFICATION

.1 Timing:

.1 After pressure and leakage tests and disinfection completed, and certificate of completion has been issued by authority having jurisdiction.

.2 Procedures:

.1 Verify that flow rate and pressure meet Design Criteria.

.2 TAB HWC in accordance with Section 23 05 93 - Testing, Adjusting and Balancing for HVAC.

.3 Adjust pressure regulating valves while withdrawal is maximum and inlet pressure is minimum.

.4 Sterlize HWS and HWC systems for Legionella control.

.5 Verify performance of temperature controls.

.6 Verify compliance with safety and health requirements.

.7 Check for proper operation of water hammer arrestors. Run one outlet for 10 seconds, then shut of water immediately. If water hammer occurs, replace water hammer arrestor or re-charge air chambers. Repeat for outlets and flush valves.

.8 Confirm water quality consistent with supply standards, verifying that no residuals remain as a result of flushing and/or cleaning.

.3 Reports:

.1 In accordance with Section 01 91 01 - Commissioning: Reports, using report forms as specified in Section 01 91 01 - Commissioning: Report Forms and Schematics.

.2 Include certificate of water flow and pressure tests conducted on incoming water service, demonstrating adequacy of flow and pressure.

.4 Verification requirements in accordance with Section 01 47 17 - Sustainable Requirements: Contractor's Verification, include:

.1 Materials and resources.

.2 Storage and collection of recyclables.

.3 Construction waste management.

.4 Resource reuse.

.5 Local/regional materials.

.6 Low-emitting materials.

END OF SECTION

PART 1 GENERAL

1.1 SUMMARY

.1 Section Includes:

.1 The installation of storm drainage waste and vent piping.

.2 Sustainable requirements for construction and verification.

.2 Related Sections:

.1 Section 01 74 21 - Construction/Demolition Waste Management And Disposal.

.2 Section 01 70 12 - Safety Requirements.

1.2 REFERENCES

.1 American Society for Testing and Materials International, (ASTM).

.1 ASTM B32-03, Specification for Solder Metal.

.2 ASTM B306-02, Specification for Copper Drainage Tube (DWV).

.3 ASTM C564-03a, Specification for Rubber Gaskets for Cast Iron Soil Pipe and Fittings.

.2 Canadian Standards Association (CSA International).

.1 CSA B67-1972 (R1996), Lead Service Pipe, Waste Pipe, Traps, Bends and Accessories.

.2 CAN/CSA-B70-02, Cast Iron Soil Pipe, Fittings and Means of Joining.

.3 CAN/CSA-B125-01, Plumbing Fittings.

1.3 QUALITY ASSURANCE

.1 Health and Safety:

.1 Do construction occupational health and safety in accordance with Section 01 70 12 - Health and Safety Requirements.

1.4 DELIVERY STORAGE AND DISPOSAL

.1 Waste Management and Disposal:

.1 Separate and recycle waste materials in accordance with Section 01 74 21 - Construction/Demolition Waste Management And Disposal.

.2 Collect and separate for disposal paper, plastic, polystyrene, corrugated cardboard packaging material in appropriate on-site bins for recycling in accordance with Waste Management Plan.

PART 2 PRODUCTS

1.5 COPPER TUBE AND FITTINGS

.1 Above ground sanitary and vent Type DWV to: ASTM B306.

.1 Fittings.

.1 Cast brass: to CAN/CSA-B125.

.2 Wrought copper: to CAN/CSA-B125.

.2 Solder: tin-lead, 50:50, type 50A, to ASTM B32.

1.6 CAST IRON PIPING AND FITTINGS

.1 Buried sanitary, storm and vent minimum NPS 3, to: CAN/CSA-B70, with one layer of protective coating of asphalt.

.1 Joints.

.1 Mechanical joints.

.1 Neoprene or butyl rubber compression gaskets: to ASTM C564 or CAN/CSA-B70.

.2 Stainless steel clamps.

.2 Hub and spigot.

.1 Caulking lead: to CSA B67.

.2 Cold caulking compounds.

.2 Above ground sanitary and vent: to CAN/CSA-B70.

.1 Joints.

.1 Hub and spigot.

.1 Caulking lead: to CSA B67.

.2 Mechanical joints.

.1 Neoprene or butyl rubber compression gaskets with stainless steel clamps.

PART 3 EXECUTION

1.7 INSTALLATION

.1 In accordance with Section 23 05 05 - Installation of Pipework.

.2 Install in accordance with Canadian Plumbing Code, Provincial Plumbing Code and local authority having jurisdiction.

1.8 TESTING

.1 Hydraulically test to verify grades and freedom from obstructions. Monitor levels for min. 24 hour

1.9 PERFORMANCE VERIFICATION

.1 Cleanouts:

.1 Ensure accessible and that access doors are correctly located.

.2 Open, cover with linseed oil and re-seal.

.3 Verify that cleanout rods can probe as far as the next cleanout, at least.

.2 Test to ensure traps are fully and permanently primed.

.3 Ensure that fixtures are properly anchored, connected to system and effectively vented.

.4 Affix applicable label (sanitary, vent, pump discharge etc.) c/w directional arrows every floor or 4.5 m (whichever is less).

1.10 VERIFICATION

.1 Verification requirements in accordance with Section 01 47 17 - Sustainable Requirements: Contractor's Verification, include:

.1 Materials and resources.

.2 Storage and collection of recyclables.

.3 Construction waste management.

.4 Resource reuse.

.5 Local/regional materials.

.6 Low-emitting materials.

END OF SECTION

PART 1 GENERAL

1.1 SUMMARY

.1 Section Includes:

.1 Materials and installation for plumbing specialties and accessories.

.2 Related Sections:

.1 Section 01 33 00 - Submittal Procedures.

.2 Section 01 70 12 - Safety Requirements.

.3 Section 01 45 00 - Quality Control.

.4 Section 01 74 19 - Construction/Demolition Waste Management and Disposal.

.5 Section 01 78 00 - Closeout Submittals.

1.2 REFERENCES

.1 American Society for Testing and Materials International (ASTM).

.1 ASTM A126-04 (2009), Specification for Gray Iron Castings for Valves, Flanges and Pipe Fittings.

.2 ASTM B62-09, Specification for Composition Bronze or Ounce Metal Castings.

.2 American Water Works Association (AWWA).

.1 AWWA C700-09, Cold Water Meters-Displacement Type, Bronze Main Case.

.2 AWWA C701-12, Cold Water Meters-Turbine Type for Customer Service.

.3 AWWA C702-10, Cold Water Meters-Compound Type.

.3 Canadian Standards Association (CSA International).

.1 CSA-B64 Series-11, Backflow Preventers and Vacuum Breakers.

.2 CSA-B79-08 (R2013), Floor, Area and Shower Drains, and Cleanouts for Residential Construction.

.3 CSA-B356-10, Water Pressure Reducing Valves for Domestic Water Supply Systems.

.4 Health Canada/Workplace Hazardous Materials

Information System (WHMIS).

.1 Material Safety Data Sheets (MSDS).

.5 Plumbing and Drainage Institute (PDI).

.1 PDI-G101-96, Testing and Rating Procedure for Grease Interceptors with Appendix of Sizing and Installation Data.

.2 PDI-WH201-92, Water Hammer Arresters Standard.

1.3 SUBMITTALS

.1 Submittals in accordance with Section 01 33 00 - Submittal Procedures.

.2 Product Data:

.1 Submit manufacturer's printed product literature, specifications and datasheet for fixtures and equipment.

.2 Indicate dimensions, construction details and materials for specified items.

.3 Shop Drawings:

.1 Submit shop drawings to indicate materials, finishes, method of anchorage, number of anchors, dimensions construction and assembly details and accessories for following: soap dispensing system.

.4 Certificates: submit certificates signed by manufacturer certifying that materials comply with specified performance characteristics and physical properties.

.5 Instructions: submit manufacturer's installation instructions.

.6 Manufacturers' Field Reports: manufacturers' field reports specified.

.7 Closeout submittals: submit maintenance and engineering data for incorporation into manual specified in Section 01 78 00 - Closeout Submittals, include:

.1 Description of plumbing specialties and accessories, giving manufacturers name, type, model, year and capacity.

.2 Details of operation, servicing and

maintenance.

.3 Recommended spare parts list.

1.4 QUALITY ASSURANCE

.1 Health and Safety:

.1 Do construction occupational health and safety in accordance with Section 01 70 12 - Safety Requirements.

1.5 DELIVERY, STORAGE AND HANDLING

.1 Waste Management and Disposal:

.1 Separate waste materials for reuse and recycling in accordance with Section 01 74 21 - Construction/Demolition Waste Management and Disposal.

.2 Remove from site and dispose of packaging materials at appropriate recycling facilities.

.3 Collect and separate for disposal paper, plastic, polystyrene, corrugated cardboard, packaging material in appropriate on-site bins for recycling in accordance with Waste Management Plan.

.4 Divert unused metal materials from landfill to metal recycling facility.

.5 Fold up metal and plastic banding, flatten and place in designated area for recycling.

PART 2 PRODUCTS

1.6 FLOOR DRAINS

.1 Floor Drains and Trench Drains: to CSA B79.

.2 FD (Regular Floor Drain).

.1 Epoxy coated, cast iron body, anchor flange, reversible membrane clamp, primary and secondary weepholes, 6 mm thick adjustable nickel bronze strainer, no hub min. size 100mm unless noted.

.2 Shape to be round in mechanical room, square everywhere else as shown on drawings.

.3 Acceptable Manufacturer

.1 Zurn .

.2 Watts.

.3 Jay R. Smith.

.3 FFD (Funnel Floor Drain)

Similar to FD-1 Except with oval nickel bronze funnel.

.1 Acceptable Manufacturer

.1 Watts .

.2 Zurn .

.3 Jay R. Smith.

.4 HD (Hub Drain)

Similar to FD-1.

.1 Acceptable Manufacturer

.1 Watts .

.2 Zurn .

.3 Jay R. Smith.

.5

1.7 CLEANOUTS

.1 Cleanout Plugs: heavy cast iron male ferrule with brass screws and threaded brass or bronze plug. Sealing-caulked lead seat or neoprene gasket.

.2 Access Covers:

.1 Wall Access: face or wall type, polished nickel bronze or stainless steel square cover with flush head securing screws, bevelled edge frame complete with anchoring lugs.

.2 Floor Access: round cast iron body and frame with adjustable secured nickel bronze top.

.1 Plugs: bolted bronze with neoprene gasket.

.2 Cover for Unfinished Concrete Floors: nickel bronze, round gasket, vandal-proof screws.

.3 Cover for Tile and Linoleum Floors: polished nickel bronze with recessed cover for linoleum or tile infill, complete with vandal-proof locking screws.

1.8 WATER HAMMER ARRESTORS

.1 Stainless steel construction, bellows type:

to PDI-WH201.

.2 Acceptable Manufacturer
- .1 Zurn Z1700 Size No. 100.
- .2 Amtrol Diatrol 536.
- .3 Enpoco.
- .4 Precision Plumbing Products.
- .5 J. R. Smith.

.3 Install one at each pipe (C,H,R) at each fixture or group of fixtures.

1.9 BACK FLOW PREVENTERS

.1 Preventers: to CSA-B64 Series, application as indicated reduced pressure principle type double check valve assembly back flow preventer with intermediate atmospheric vent or vacuum breaker.

1.10 VACUUM BREAKERS

.1 Breakers: to CSA-B64 Series, vacuum breaker atmospheric.

1.11 TRAP SEAL PRIMERS

.1 Brass, with integral vacuum breaker, NPS1/2 solder ends, NPS1/2 drip line connection.

.2 24V solenoid valve for EMCS operation on timed sequence.

.3 1 to 4 copper adaptor tree c/w plastic cover.

PART 3 EXECUTION

1.12 MANUFACTURER 'S INSTRUCTIONS

.1 Compliance: comply with manufacturer's written recommendations or specifications, including product technical bulletins, handling, storage and installation instructions, and data sheet.

1.13 INSTALLATION

.1 Install in accordance with National Plumbing Code of Canada provincial codes and local authority having jurisdiction.

.2 Install in accordance with manufacturer's instructions and as specified.

1.14 CLEANOUTS

.1 Install cleanouts at base of soil and waste stacks, and rainwater leaders, at locations required code, and as indicated.

.2 Bring cleanouts to wall or finished floor unless serviceable from below floor.

.3 Building drain cleanout and stack base cleanouts: line size to maximum NPS4.

1.15 WATER HAMMER ARRESTORS

.1 Install on branch supplies to fixtures or group of fixtures where indicated.

1.16 BACK FLOW PREVENTORS

.1 Install in accordance with CSA-B64 Series, where indicated and elsewhere as required by code.

.2 Pipe discharge to terminate over nearest drain and or service sink.

1.17 TRAP SEAL PRIMERS

.1 Install for floor drains and elsewhere, as indicated.

.2 Install on cold water supply to nearest frequently used plumbing fixture, in concealed space, to approval of DCC Representative.

.3 Install soft copper tubing to floor drain.

1.18 START-UP

.1 General:

.1 In accordance with Section 01 91 01 - Commissioning: General Requirements, supplemented as specified herein.

.2 Timing: start-up only after:

.1 Pressure tests have been completed.

.2 Disinfection procedures have been completed.

.3 Certificate of static completion has been issued.

.4 Water treatment systems operational.

.3 Provide continuous supervision during start-up.

1.19 FIELD QUALITY CONTROL

.1 Contractor's Verification, include:

.1 Materials and resources.

.2 Storage and collection of recyclables.

.3 Construction waste management.

.4 Resource reuse.

.5 Recycled content.

.6 Local/regional materials.

.7 Wood.

.8 Low-emitting materials.

1.20 TESTING AND ADJUSTING

.1 General:

.1 In accordance with Section 01 91 01 - Commissioning: General Requirements, supplemented as specified.

.2 Timing:

.1 After start-up deficiencies rectified.

.2 After certificate of completion has been issued by authority having jurisdiction.

.3 Application tolerances:

.1 Pressure at fixtures: +/- 70 kPa.

.2 Flow rate at fixtures: +/- 20%.

.4 Adjustments:

.1 Verify that flow rate and pressure meet design criteria.

.2 Make adjustments while flow rate or withdrawal is (1) maximum and (2) 25% of maximum and while pressure is (1) maximum and (2) minimum.

.5 Floor drains:

.1 Verify operation of trap seal primer.

.2 Prime, using trap primer. Adjust flow rate to suit site conditions.

.3 Check operations of flushing features.

.4 Check security, accessibility, removeability of strainer.

.5 Clean out baskets.

.6 Vacuum breakers, backflow preventers:

.1 Test tightness, accessibility for O&M of

cover and of valve.

.2 Simulate reverse flow and back-pressure conditions to test operation of vacuum breakers, backflow preventers.

.3 Verify visibility of discharge from open ports.

.7 Access doors:

.1 Verify size and location relative to items to be accessed.

.8 Cleanouts:

.1 Verify covers are gas-tight, secure, yet readily removable.

.9 Water hammer arrestors:

.1 Verify proper installation of correct type of water hammer arrester.

.10 Commissioning Reports:

.1 In accordance with Section 01 91 01 - Commissioning: Reports, supplemented as specified.

.11 Training:

.1 In accordance with Section 01 91 01 - Commissioning: Training of O&M Personnel, supplemented as specified.

.2 Demonstrate full compliance with Design Criteria.

END OF SECTION

PART 1 GENERAL

1.1 SUMMARY

.1 Section Includes:

.1 The supply and installation of Plumbing Fixtures and Trim.

.2 Products Installed but not Supplied Under this Section:

.1 Install rough-in for equipment supplied by others, complete with valves on hot and cold water supplies, waste and vent.

.2 Equipment installed by others.

.1 Connect with unions.

.3 Related Sections:

.1 Section 01 33 00 - Submittal Procedures.

.2 Section 01 74 21 - Construction/Demolition Waste Management And Disposal.

.3 Section 01 70 12 - Safety Requirements.

.4 Section 01 78 00 - Closeout Submittals.

1.2 REFERENCES

.1 Canadian Standards Association (CSA International).

.1 CAN/CSA-B45 Series-02, Plumbing Fixtures.

.2 CAN/CSA-B125-01, Plumbing Fittings.

.3 CAN/CSA-B651-95 (R2001), Barrier-Free Design.

1.3 SUBMITTALS

.1 Submittals in accordance with Section 01 33 00 - Submittal Procedures.

.1 Submit shop drawings and product data in accordance with Section 01 33 00 - Submittal Procedures.

.1 Indicate, for all fixtures and trim:

.1 Dimensions, construction details, roughing-in dimensions.

.2 Closeout Submittals:

.1 Submit maintenance data in accordance

with Section 01 78 00 - Closeout Submittals.

.2 Include:

.1 Description of fixtures and trim, giving manufacturer's name, type, model, year, capacity.

.2 Details of operation, servicing, maintenance.

.3 List of recommended spare parts.

1.4 QUALITY ASSURANCE

.1 Health and Safety:

.1 Do construction occupational health and safety in accordance with Section 01 70 12 - Safety Requirements.

1.5 DELIVERY STORAGE AND DISPOSAL

.1 Waste Management and Disposal:

.1 Separate waste materials for reuse and recycling in accordance with Section 01 74 21 - Construction/Demolition Waste Management And Disposal.

.2 Collect and separate for disposal paper, plastic, polystyrene, corrugated cardboard, packaging material in appropriate on-site bins for recycling in accordance with Waste Management Plan.

.3 Fold up metal and plastic banding, flatten and place in designated area for recycling.

PART 2 PRODUCTS

1.6 MATERIAL

.1 Sustainable Requirements:

.1 Materials and resources in accordance with Section 01 47 15 Sustainable Requirements: Construction.

1.7 GENERAL

.1 Fixtures: manufacture in accordance with CAN/CSA-B45 series.

.2 Trim, fittings: manufacture in accordance with CAN/CSA-B125.

.3 Exposed plumbing brass and escutcheons to be

chrome plated.

.4 Number, locations: architectural drawings to govern.

.5 Fixtures in any one location to be product of one manufacturer and of same type.

.6 Trim in any one location to be product of one manufacturer and of same type.

.7 Bring hot and cold piping to each fixtures as required min. ½" copper unless noted.

.8 Each fixture shall have heavy chrome plated copper flexible supply risers c/w screw driver stop, reducer, escutcheon.

2.3 FIXTURES

.4 Sinks

.1 SS-1 Countertop Mount Sink – Double Bowl

.1 Double bowl countertop mount sink, 3 holes, 203mm center, 521mm x 794mm x 203mm deep, spillway, counter mounted, backledge, 18 gauge (1.2mm) stainless steel, satin finish rim and bowls, mounting kit provided, fully undercoated to reduce condensation and resonance, factory applied rim seal, 89mm crumb cup waste assembly with 38 mm tailpiece. Two handle manual faucet, 203mm centerset, lead free solid brass body, ceramic 1/4 turn cartridges, 203mm rigid/swing gooseneck spout, 8.3LPM. Metal red and blue index buttons 60mm long lever handles with vandal resistant screw. point of use mechanical water mixing valve, bronze body, temperature adjusting dial, 10mm inlets and outlet compression fittings, high temperature thermostatic limit stop (automatic shuts down flow of water when temperature reaches (+/+/))

with automatic reset, integral checks, offer temperature range from full cold through 46°C. Provide tee, adaptors and flex. copper tubing to suit installation. Faucet Supplies, chrome plated polished brass, commercial duty 1/4 turn ball valve angle stops, 13mm I. D. Inlet x 127mm horizontal extension tubes, combination V. P. Loose key handles, escutcheons and flexible copper risers. P-Trap , heavy cast brass adjustable body, with slip nut, 38mm size, box flange and seamless tubular wall bend. Acceptable manufacturers include but are not limited to AMERICAN STANDARD, FRANKE & CRANE.

.9 Lab Sink

.1 S-1 Corrosion Resistant Lab Sink

.1 Laboratory Sink, 521mm x 444mm x 305mm deep, counter mounted, one compartment corrosion resistant, virgin high density black polyethylene, conforms to ASTM D 1248, integral national pipe thread outlet, waste assembly in rear corners, complete with mounting kit, 'Flush Rim' for counter top installation, and 38mm tailpiece with rubber stopper. Acceptable manufacturers include but are not limited to AMERICAN STANDARD, ZURN & ORION.

.11 Eye Wash and Emergency Showers

.1 EW-1 Combination Shower and Eye/face wash – Pedestal Mounted

.1 pedestal mounted, combination shower and eye/face wash, stainless steel bowl, single inverted

directional laminar flow head with integral flow control, hydrodynamic designed ABS plastic shower head with self-regulating flow control, chrome plated brass stay open ball valve with stainless steel ball and stem, in-line mesh water strainer, galvanized steel pipe with cast iron floor flange, flow rate of 24LPM for eye/face wash and 75.7LPM for shower, 32mm waste, universal sign. P-Trap , heavy cast brass adjustable body, with slip nut, 32mm size, shallow wall flange and seamless tubular wall bend. Floor Drain, 51mm outlet, epoxy coated cast iron, anchor flange, 127mm adjustable round nickel bronze strainer, reverisble clamping collar with primary & secondary weepholes. Provide p-trap for drain. EMERGENCY MIXING VALVE CABINET. Acceptable manufacturers include but are not limited to AMERICAN STANDARD, ZURN & HAWS.

.2 EW-2 Emergency Eyewash and Drench Shower Combination Thermostatic Mixing Valve

.1 emergency eyewash and drench shower combination thermostatic mixing valve, all brass and stainless steel design, vandal-resistant temperature adjustment, stainless steel sliding piston control device allow cold flow through both the fixed and variable bypass, 32mm N. P. T. Outlet, positive hot water shut-off, temperature gauge, liquid-filled thermostatic motor control mechanism, 29°C

factory set temperature, standard 21°C - 32°C temperature range, 94LPM flow capacity at 207 kPa pressure drop across the valve, 37.85LPM min. Flow rate, 79LPM bypass flowrate at 207 kPa. (See 911E). Acceptable manufacturers AMERICAN include but are not limited to STANDARD, ZURN & LAWLER.

.12 Drinking Fountains and Water Coolers

.1 DF-1 Fountain Cooler (Barrier-Free)

.1 Fountain Cooler, wall mounted barrier-free drinking fountain shall include dual 18 ga. Type 304 Stainless Steel satin finish basins, push-button operated valves with front-accessible cartridge and flow adjustment, polished chrome-plated brass vandal-resistant bubbler heads, polished chrome-plated vandal-resistant waste strainers, vandal-resistant bottom plates, stainless steel satin finish back panel and louvered intrusion-proof grill, high and low fountain mounting levels, 32mm IPS traps and # 5551 glass fillers. Fountain Supplies, C.P. with loose key heavy all brass straight stops. Pair required for dual fountain. 'p' Trap, C.P., polished, cast brass adjustable body, 32mm with cleanout plug, seamless brass wall bend and escutcheon. Provide Ground Fault Interrupter. Provide adequate support in wall for fountain mounting. Pair of supply stops and 'p' traps. Provide Ground Fault Interrupter.

Provide adequate support in wall for fountain mounting. Pair of supply stops and 'p' traps. Acceptable manufacturers AMERICAN STANDARD, ZURN & HAWS.

PART 3 EXECUTION

1.8 INSTALLATION

.1 Mounting heights:

.1 Standard: to comply with manufacturer's recommendations unless otherwise indicated or specified.

.2 Wall-hung fixtures: To NBC heights, or as indicated on Architectural details.

.3 Physically handicapped: to comply with most stringent of either NBCC or CAN/CSA B651.

1.9 ADJUSTING

.1 Conform to water conservation requirements specified this section.

.2 Adjustments:

.1 Adjust water flow rate to design flow rates.

.2 Adjust pressure to fixtures to ensure no splashing at maximum pressures.

.3 Checks:

.1 Aerators: operation, cleanliness.

.2 Vacuum breakers, backflow preventers: operation under all conditions.

.3 Wash fountains: operation of flow-actuating devices.

.4 Thermostatic controls:

.1 Verify temperature settings, operation of control, limit and safety controls.

1.10 VERIFICATION

.1 Contractor's Verification, include:

.1 Materials and resources.

.2 Storage and collection of recyclables.

.3 Construction waste management.

.4 Resource reuse.

.5 Local/regional materials.

.6 Low-emitting materials.

END OF SECTION

PART 1 GENERAL

1.1 SUMMARY

.1 Section Includes:

.1 Use of mechanical systems during construction.

1.2 USE OF SYSTEMS

.1 Use of new permanent heating/ventilating systems for supplying temporary heat/ ventilation is permitted only under following conditions:

.1 Entire system is complete, pressure tested, cleaned, flushed out.

.2 Specified water treatment system has been commissioned, water treatment is being continuously monitored.

.3 Building has been closed in, areas to be heated/ventilated are clean and will not thereafter be subjected to dust-producing processes.

.4 There is no possibility of damage.

.5 Supply ventilation systems are protected by 60 % filters, inspected daily, changed every week or more frequently as required.

.6 Return systems have approved filters over openings, inlets, outlets.

.7 Systems will be:

.1 Operated as per manufacturer's recommendations and instructions.

.2 Operated by Contractor.

.3 Monitored continuously by Contractor.

.8 Warranties and guarantees are not relaxed.

.9 Regular preventive and other manufacturers recommended maintenance routines are performed by Contractor at own expense and under supervision of Owner.

.10 Refurbish entire system before static completion; clean internally and externally, restore to "as- new" condition, replace filters in air systems.

.2 Filters specified in this Section are over and above those specified in other Sections of this project.

.3 Exhaust systems are not included in approvals for temporary heating ventilation.

Part 2 PRODUCTS

2.1 NOT USED

.1 Not Used.

PART 3 EXECUTION

2.2 NOT USED

.1 Not Used.

END OF SECTION

Part 1 GENERAL

1.1 GENERAL

.1 The following is the strategy for Commissioning. Commissioning is a process in which the Commissioning Team Members, the Design Consultants, the PWGSC Project Manager, PWGSC Design and Quality Assurance Authority, PWGSC Commissioning Manager, the Owner, Commissioning Manager, General Contractor and the Mechanical Contractor and their Sub Contractors execute the commissioning process. The Owner has a skilled team of building staff and operators who can competently run a building provided they are given the appropriate background information, training and documentation.

.2 This specification section must be read in close conjunction with the noted commissioning sections below:

.1 Section 01 33 00 – Submittal Procedures.

.2 Section 01 91 31 – Commissioning (Cx) Plan.

.3 Section 01 91 33 - Commissioning Forms.

.4 Section 01 91 41 - Commissioning Training.

.3 The Mechanical Contractor shall meet all additional requirements noted in the referenced documents above as well as the work identified within the related sections below.

.4 Acronyms:

.1 AFD - Alternate Forms of Delivery, service provider.

.2 EMCS - Energy Monitoring and Control Systems (BAS)

.3 O & M - Operation and Maintenance

.4 CL2 Containment Level 2

.5 ICL Installation Check Lists

.6 PI - Product Information (Forms)

.7 PV - Performance Verification (Forms)

.8 FPT – Functional Performance Test (Plans)

.9 TAB - Testing, Adjusting and Balancing.

.10 OEM – Original Equipment Manufacturer

.11 BAS – Building Automation System (EMCS)

.12 LSC – Life Safety Compliance

.13 SOP – Standard Operating Procedures

.14 M&E – Mechanical and Electrical

.15 WHMIS – Workplace Hazardous Materials Information System

.16 MSDS – Material Safety Data Sheet

.17 OPR – Owners Project Requirements

1.2 RELATED SECTIONS

.1 Section 01 33 00 – Submittal Procedures.

.2 Section 01 91 31 – Commissioning (Cx) Plan.

.3 Section 01 91 33 - Commissioning Form.

.4 Section 01 91 41 - Commissioning Training.

.5 Division 21 / 22 / 23 / 25 Specification Sections including but not limited to.

1.3 RESPONSIBILITIES

.1 The following are the general responsibilities for commissioning of the Mechanical Contractor

.1 Mechanical Contractor–Construction:

.1 General:

.1 The Mechanical Contractor shall be responsible for the commissioning process detailed within the Mechanical Specifications Sections.

.2 The Mechanical Contractor shall conform to the commissioning requirements detailed in Mechanical Specification and the Commissioning Specification in Division 01.

.3 The Mechanical

Contractor shall coordinate and cooperate with the Electrical Contractor as detailed in Specification sections of the Mechanical and Electrical Specifications and as required to meet all commissioning requirements.

.4 Assign a Commissioning Coordinator who will have the required decision making authority / commissioning expertise and who is dedicated to the commissioning process.

.5 Explain and ensure all Sub-Contractors understand the commissioning requirements. The Mechanical Contractor shall schedule all commissioning tasks required to be completed by their Sub-Contractors.

.6 If the project has phases the Record Drawings shall be submitted at the completion of each phase. The Mechanical Contractor shall at the end of the project submit a full consolidated set of recordings.

.7 Cooperate as required.

.2 Meetings:

.1 Throughout the Construction Schedule the Mechanical Contractor / Commissioning shall

attend all commissioning and punch list meetings.

.3 Equipment Start up:

.1 The Mechanical Contractor shall provide notification of the scheduled date of completion for mechanical equipment and systems in writing to the Commissioning Manager and Design Consultant a minimum of ten (10) working days prior to Start Up.

.2 Prior to providing notification of completion, the Mechanical Contractor shall review the work site and ensure all of the above are complete. In addition all labeling must be complete.

.3 Upon notice of scheduled completion separate walkthroughs shall be scheduled with the Commissioning Manager.

.4 The Mechanical Contractor shall participate in construction complete walkthroughs for each system, sub-system or key item of mechanical equipment. Any items found to be not complete will be documented on a punch list. Items that are deemed to be essential for test run must be completed prior to the equipment or system being turned on.

.5 The Mechanical

Contractor shall participate in Health and Safety walkthroughs for each system, sub-system or key item of mechanical equipment prior to the equipment being started.

.4 Commissioning Test Forms:

.1 Rectify deficiencies documented in the PI, installation, start-up, or functional performance verification (PV) test forms.

.2 Complete forms for PI, installation, start-up, and PV testing with Commissioning Manager.

.3 Complete form(s) for all integrated system(s) performance testing with Commissioning Manager.

.4 Update, create and complete forms as specified.

.5 Mechanical Contractor Testing:

.1 The Commissioning Manager will develop lists of tasks and schedules for building systems performance testing and demonstration.

.2 Working with the Commissioning Manager the Mechanical Contractor shall schedule testing of the mechanical equipment and systems in accordance with the Contract Documents and the Program established by the Commissioning Manager. A detailed schedule shall be

provided a minimum of two (2) weeks prior to the equipment or system being turned on. Schedule shall break down the testing into individual components, equipment, sub systems, and systems. The schedule shall provide adequate time for testing and commissioning of each system.

.3 During the testing of systems the Mechanical Contractor shall make available skilled tradesmen to effect trouble shooting and effect repairs. During start up and performance testing same day repair and trouble shooting of equipment shall be provided.

.4 The Mechanical Contractor shall conduct tests as detailed by the Commissioning Manager in the installation, start-up, functional performance verification (PV) and integrated building system(s) test forms. The test forms shall be filled out by the Mechanical Contractor and shall be witnessed by the Commissioning Manager.

.5 The Mechanical Contractor shall document the results of all tests conducted during the construction and the post construction phase and

shall fill out documentation in accordance with Commissioning Manager's requirements.

.6 The Mechanical Contractor shall ensure that Sub-Contractors' testing is performed and complete in accordance with the Commissioning Manager's requirements.

.6 Progress Payments:

.1 Set aside in billing breakdown funds for commissioning, testing, manuals, demonstration training, and all other commissioning activities.

.7 Sub trades and Outside Design Consultants:

.1 Understand quality standards contained in the specifications and ensure by inspections, site visits and document revisions that they are being met by the Sub-Contractors.

.2 The Mechanical Contractor shall keep records of their testing in accordance with Commissioning Manager's requirements.

.8 Maintenance Manuals:

.1 Assemble documentation; manuals, record drawings, commissioning forms, prior to turn over and training.

.2 Maintenance manuals shall be put together immediately upon completion of the submittal of shop drawings.

.3 All maintenance manuals shall be formatted as per PWGSC Standards – Commissioning Standard.

.4 Provide any information required to satisfy the requirements of all related specifications and as requested by Commissioning Manager for completion of the final commissioning report.

.9 Building Turnover and Staff Training - Mechanical Contractor:

.1 Arrange training sessions with the Design Consultant, Commissioning Manager and PWGSC Project Manager.

.2 Schedule clear interface between construction and Owner’s operation of equipment.

.3 Testing and turnover procedures to be approved by the Commissioning Manager and a minimum of three (3) weeks prior to the first test / system or equipment scheduled turnover.

.2 Commissioning Manager:

.1 The Commissioning Manager will be generating the PI, PV and integrated systems commissioning test forms that are to be completed by the Mechanical Contractor.

1.4 COMMISSIONING REQUIREMENTS OVERVIEW

.1 Project equipment and systems as per existing contract documents

.1 Notes

.1 1 PI forms only apply to new components and equipment

Specification Section	Item Description	Product Information Forms (PI)[1]	Installation Check Forms[1]	Operation / Performance Checks (PV)
	VAV	Y	Y	Y
	ACU	Y	Y	Y
	DP Monitor	Y	Y	Y
	BMS		Y	Y
	Fume Hoods		Y	
	Sinks / Faucets	Y		Y
	Emergency Showers Eye Washes	Y	Y	Y
	BSC		Y	

1.5 INTEGRATED BUILDING SYSTEMS (IBS) PERFORMANCE TESTING

.1 If there is a requirement for detailed Performance Verification Testing of Integrated Building Systems the Construction Team shall execute the testing as required. The detail of these simulated performance verification tests of integrated / interconnected systems will be developed during the construction period of the project. The Mechanical Contractor will play a major role in supporting and participating in these performance verification tests of integrated / interconnected systems.

.2 The integrated / interconnected system performance tests are in addition to the Performance Verification Tests (PV).

.3 Integrated / interconnected performance testing may include the following integrated /interconnected systems:

.1 HVAC and associated systems forming part of integrated HVAC systems.

.2 Indoor air quality.

.3 Environmental space conditions.

.4 Fire alarm systems.

.5 Emergency lighting systems.

1.6 THE COMMISSIONING PROCESS

.1 The Commissioning Process consists of the following:

.1 Processing and completion of Shop Drawings and Record Drawings.

.1 Installation inspection of all Mechanical Equipment and completion of all associated

testing.

.2 Independent Testing Contractor’s participation and documentation.

.3 Performance Testing of Mechanical Equipment and Systems.

.4 Performance Testing of Integrated / Interconnected Systems.

.5 Participation in all Commissioning and Punch List Meetings.

.6 Participation in the completion of Operating and Maintenance Manuals.

.7 Staff Operating Training.

.8 Preparation and Completion of all Commissioning Forms.

.9 Warranties.

.2 Shop Drawings and Record Drawings:

.1 Conform to 25 05 00 requirements for project submittals such as; shop drawings and record drawings.

.3 Installation Inspection and Equipment Verification/Checks:

.1 The Mechanical Contractor shall coordinate with the Commissioning Manager and the PWGSC Project Manager who will be inspecting the mechanical installation.

.2 The Mechanical Contractor shall notify the Commissioning Manager when each piece of equipment is ready for inspection for PI, installation, start up and performance (PV) testing. The Mechanical Contractor shall provide a detailed schedule for each system, subsystem and each piece of equipment.

.3 The Mechanical Contractor shall rectify any deficiencies found by the Commissioning Manager or Design Consultant

during the commissioning process.

.4 Testing of Equipment and Systems:

.1 The Mechanical Contractor shall be responsible for all tests detailed in the Contract Documents, BAS Sequences of Operation, and those tests required by a manufacturer as part of their installation requirements. The Mechanical Contractor shall be responsible for completing the PI, installation, start-up and functional performance (PV) test forms in accordance with the Contract Documents and BAS Sequences of Operation under the guidance of the Commissioning Manager.

.2 The Mechanical Contractor shall only utilize employees with previous experience in Testing Procedures as they relate to a particular subject.

.3 The Mechanical Contractor shall inform the Commissioning Manager, in writing, who they intend to use along with a list of relevant experience and projects completed. The Commissioning Manager retains the right to accept or reject the proposed individual.

.4 The Mechanical Contractor shall hire the manufacturers' technicians who will conduct required start-up and/or programming and testing on their equipment.

.5 The Mechanical Contractor shall cooperate with any Independent Testing. Mechanical Contractors to provide assistance during the testing procedures.

.6 All tests shall be witnessed by the Commissioning Manager as they see fit. If tests are

not witnessed and forms are not signed, the tests shall be repeated at the Mechanical Contractor's expense.

.7 Commissioning Meetings and Reporting:

.1 The Mechanical Contractor shall include the schedule for all tests in the Construction Schedule.

.2 The commissioning meetings will be held as separate meetings from the regular construction meetings. The testing schedules and the results of all tests shall be reviewed.

.8 All testing forms and reports associated with the mechanical systems shall be directed to the General Contractor with copies to the Design Consultant and Commissioning Team members as required.

.9 The forms and reports to be issued shall include:

.1 Shop drawings issued and accepted.

.2 Equipment Product Information (PI) Forms.

.3 Installation Check Lists (ICL).

.4 Performance Verification (PV) Test Forms.

.5 Integrated System Test Forms.

.6 Reports resulting from tests.

.7 Testing Schedule.

.8 Minutes of commissioning meetings.

.9 Manufacturers' Certificates, Verification and Test results.

.10 Operating and

Maintenance Manuals.

.5 Staff and Operator Training:

.1 The Mechanical Contractor and equipment manufacturers shall provide operator training for each system and its associated equipment.

.2 The training shall be executed on a construction phase by phase basis as per construction schedule.

.3 The training shall be provided by qualified technicians and shall be conducted in a classroom, and at the equipment or system.

.4 The training sessions shall be scheduled, coordinated by the General Contractor and turned over to the PWGSC Project Manager as per specifications.(video tapping as per PWGSC written request)

.5 Each training session shall be structured to cover the following:

.1 Operating and Maintenance Manual.

.2 Operating Procedures and BAS Sequences of Operation.

.3 Maintenance Procedures.

.4 Trouble-shooting Procedures.

.5 The manufacturers or service representatives name, address and phone number.

.6 Submit a course outline to the Commissioning Manager, the Design Consultant, and the PWGSC Project Manager before training commences. Provide course documentation for up to ten (10) people.

.6 System Demonstration and Building Turnover:

.1 The system demonstration and building turnover to Owner's staff shall occur when:

.1 The installation is complete.

.2 The acceptance test and period conducted by the Commissioning Manager and the Design Consultant has been 100% completed successfully.

.3 Training has been completed.

.2 Equipment Operating and Maintenance Manuals have been accepted:

.1 Shop drawings have been updated.

.2 Record drawings have been 100% completed.

.3 The Commissioning process has been 100% completed successfully and the system operation accepted by the Commissioning Manager.

.4 The Deficiency Punch Lists have been completed in their entirety.

.3 The systems demonstration shall be conducted by the Mechanical Contractor and manufacturers. The demonstration shall cover all sequences of operation, maintenance requirements and a physical demonstration of equipment installation and operation.

.7 Test Forms:

.1 The Mechanical Contractor and manufacturers shall fill out the forms and check lists prepared by the Commissioning Manager during PI, installation, start-up and performance verification (PV) testing.

.2 The Commissioning Index of Forms shall be maintained by the Commissioning Manager in order to track the progress of the Commissioning process.

.8 Warranties:

.1 Equipment and system warranties shall not begin until the system demonstration and turnover has been conducted successfully and accepted by the PWGSC Project Manager. The Mechanical Contractor shall fill out the Warranty Form(s) listing the equipment and systems and the start and finishing dates for the Warranty period.

.2 Refer to the Specifications for the requirements during the Warranty period.

.3 The Design Consultant and the Commissioning Manager will review the performance of the systems in accordance with the BAS Sequences of Operation. If the performance is satisfactory, then no further action needs to be taken. If unsatisfactory, then the Mechanical Contractor will be instructed to correct all deficiencies, at his cost, to the satisfaction of the three parties.

.9 Commissioning Phases (Phase 1 to 6):

.1 Commissioning process spans various phases:

.1 Commissioning Phase 1

.1 The planning phase, where the risks, uncertainties and vulnerabilities are assessed.

.2 Establishes the extent of commissioning, time and budget for

commissioning.

.3 Occurs during project at start of Contract Documents.

.2 Commissioning Phase 2

.1 Establishes technical requirements such as test requirements and standards

.2 Finalization of mechanical equipment and systems.

.3 Occurs during latter stage of the Contract Documents.

.3 Commissioning Phase 3

.1 The implementation phase where documentation for commissioning is developed.

.2 Mechanical Contractor should have made available all finalized shop drawings.

.3 The quality and extent of commissioning is determined and finalized in agreement with the client.

.4 A master index is developed with all elements of the mechanical systems.

.5 Commissioning forms / check lists such as PI, installation, start-up and performance verification (PV) test forms are developed in this

phase.

.6 Occurs early in the Contract Administration Stage.

.4 Commissioning Phase 4

.1 The verification and commissioning before the equipment is turned over to Owner.

.2 All equipment received is checked against approved PI, installation, start-up and functional performance (PV) test forms.

.3 It is important to check in this phase that the equipment received has gone through the necessary factory tests.

.4 A Design Consultant would have witnessed some of the factory tests carried out to ensure that the tests are conducted in accordance with the required standards.

.5 Start-up and operation instructions received from the equipment manufacturers are reviewed in this phase.

.6 All deficiencies are reported to the Mechanical Contractor and rectified before equipment is turned

over to Owner for beneficial use.

.7 Occurs later on in the Contract Administration phase.

.5 Commissioning Phase 5

.1 The performance verification of the complete mechanical system functionally integrated with all the other systems in operation within the facility.

.2 Optimization, fine-tuning and post-occupancy commissioning is done in this phase.

.3 Occurs later on in the Contract Administration phase.

.6 Commissioning Phase 6

.1 Final Commissioning Report is submitted for review by the Commissioning Manager.

CONSTRUCTION AND COMMISSIONING PHASES			
Project Design & Construction Phases	**Commissioning Phases**	**Activities**	**Remarks**
Design Development		No Commissioning Activities	
Start of Contract Documents	Phase 1	Define commissioning scope and complete the detailed commissioning plan	
Latter Stage of Contract Documents	Phase 2	Development of Commissioning Forms and Test procedures	This information will be integrated into Contract documents. Also at this stage, the system performance requirements are identified, which will be verified during Phase 5 of the Commissioning

			Process
Bid / Tender	Phase 3	Commissioning Briefing completed for all Contractors prior to Bid / Tender Closing	This briefing will detail commissioning scope and task requirements
Construction Administration	Phases 4 and 5	Phase 4 verification of all Commissioning tests, Equipment startup and turn over to Owner. Phase 5 Mechanical Systems Performance Verification	Owner's staff training is completed as part of Phase 4 Commissioning procedure. This confirms that the systems are operating as per the specified requirements.
Post-Occupancy and Project Close Out	Phases 6	Phase 6 Prepare the final Commissioning evaluation report for submission to the Design Consultant for review and acceptance by the PWGSC.	All commissioning documentation is compiled into the Final Commissioning evaluation report.

.10 Framework:

.1 All equipment in the mechanical system is grouped into systems and subsystems for commissioning purposes. Documentation for PI, installation, start-up and performance (PV) will encompass all equipment in a given system.

.11 Documentation Guidelines:

.1 The Mechanical Contractor completing the PI, installation, startup and performance (PV) test forms shall follow a consistent

approach. Good documentation practice is essential in realizing the objectives of commissioning and to keep track of all commissioning related activities.

.12 Documentation shall be:

.1 Completed in permanent black ink only.

.2 Legible - can be easily read.

.3 Accurate - all information is correct.

.4 Timely - done at the appropriate time.

.5 Clear - can be understood by anyone who reads it.

.6 Consistent - done the same way each time.

.7 Complete - all required entries are made.

.8 Factual - what is written shall be what actually occurred.

.13 Correcting Mistakes: When mistakes are made accidentally while documenting, there shall be a standard way to correct the mistakes. Correct notation for documenting an entry error is to note Entry Error. Steps to follow:

.1 Cross out the error with a single line.

.2 Write the correct entry above the incorrect entry.

.3 Initial the correction.

.14 Before passing on the documentation, it shall be checked to make sure that it is timely, accurate, permanent, legible, complete, clear, consistent and factual.

.15 Submitted documentation which has not been reviewed will be rejected in its entirety by the Design Consultant.

.16 Roles and Responsibilities:

.1 Activities, roles and responsibilities are clearly

defined in commissioning plans. Commissioning activities, coordinated with all other activities in the project, will optimize the benefits of commissioning. The participants in commissioning activities have the roles and responsibilities, as given in the following Table.

SUMMARY OF ROLES AND RESPONSIBILITIES					
Commissioning Activities	Manufacturer	Mechanical Contractor	Design Consultant	PWGSC Design and Quality Assurance Authority	Commissioning Manager
Developing Commissioning Plan			Reviews	Reviews and Accepts	Develops
Developing Commissioning Test Forms			Reviews	Reviews and Accepts	Develops
Formulating Test Procedures			Reviews	Reviews and Accepts	Develops
Briefing Contractors on the Commissioning Plan	Participates	Participates	Participates	Reviews and Accepts	Presents and Briefs
Finalizing Equipment (Bid / Tender)		Selects as per specifications	Accepts	Reviews and Approves	Reviews
Factory Tests	Executes Tests	Coordinate Testing	Witnesses and Approves	Requests	Witnesses and Approves
Verifying Equipment Received		Executes PI Forms	Verifies	Accepts	Reviews
Installation Checks on Equipment	Participates	Executes Installation Test Forms	Verifies	Accepts	Reviews
Equipment Start-up	Participates	Completes start-up check forms and rectifies deficiencies.	Witness and Sign-off / Accepts	Accepts	Witness and Sign-off
Performance Verification	Participates	Executes performance check forms and rectifies deficienci	Witness and Sign-off/ Accepts	Accepts	Witness and sign-off.

		es.			
Preparation of Operation and Maintenance Manuals	Supplies information	Obtains information and prepares manuals	Reviews manuals	Reviews manuals	Reviews manuals
Owners Training	Provides	Participates / Provides	Reviews training program	Receives training	Reviews training program
Integrated Performance Tests	Participates	Executes performance forms and rectifies deficiencies	Witness and Sign-off / Accepts	Accepts	Witness and sign-off
Post Occupancy Evaluation	Participates	Participates	Reviews	Reviews	Leads

Part 2 THE COMMISSION TERMIMOLOGY AND GLOSSARY

2.1 TERMIMOLOGY AND GLOSSARY

.1 "Upon request" – Indicates that a person's attendance is required by a formal written request.

.2 "As required" or "if required" – Indicates that a person's attendance is required at their own discretion.

.3 "On behalf of" – Performs an action on behalf of another party (i.e. the Owner).

Term	Definition & Examples
Accepts	Receives and consents to deliverables content / format / or other specified deliverable parameter
Addresses	Directs attention to an outstanding unresolved document or process.
Approves	Gives consent to support a document or construction process.
Arranges	Takes responsibility to plan an activity, meeting or other deliverable. i.e. Arrange an integrated design charrette
Assembles	Responsible for gathering in one place a single submission of documents or group. i.e. Commissioning schedule

Assists	Supplies or makes available information, documentation, or other deliverables that may be used to move a deliverable towards completion. Provides administrative support to the team. i.e. Supplies support with inter-disciplinary coordination or developing a document / process
Attends	Present at an activity as required or as formally requested by contractor / specification / scope. .
Certifies	Guarantees or endorses an activity with the intention of confirming completion.
Chairs	Leads or presides over an activity or deliverable to achieve completion. Includes providing support documents / process / agenda / meeting minutes.
Co-chairs	Shares in leading or presiding over an activity or deliverable to achieve completion. Generally used for joint responsibilities for an activity.
Co-develop	Shares in creating requirements, criteria or a document to be included in the project deliverables.
Completes	Finishes or concludes a task or activity. Or having all parts or elements (lacking nothing) to a deliverable with the intent of being done. Responsible for "Final" executed deliverable.
Completion	Succeed at finishing or concluding a task / activity.
Conducts	Manages an activity or task with the intention of further developing the task.
Confirms	Establishes the truth or to make valid a task, activity or deliverable with the intention of moving the process forward. Establishes a level of preparedness for deadline. i.e. Equipment is ready for Performance Verification.
Comments	Provides written feedback on a document / task / process / deliverable. Often used to track progress of development process.
Coordinates	Works with all the parties and stakeholders with the purpose to organize efforts to ensure a seamless project, result or deliverable. i.e. Executing the Integrated Building System tests
Defines	States, explains or identifies the meaning of activity, document or deliverable.
Designs	Creates or prepares construction documents with the plan or form a structure or system. Utilized to offer instruction and clarification of project requirements to the construction team.
Develops	Creates a comprehensive project deliverable to be issued to the construction team and to be used in the construction / commissioning process. A developed deliverable will generally be further "developed " during the construction / commissioning process i.e. Mechanical design data base
Distributes	Responsible to continue to move deliverable along the process path.
Establishes	Clearly defines and articulates requirements or criteria to be included in the project deliverables.
Executes	Performs or accomplishes a deliverable with the purpose of moving the construction process forward.
Follows	Monitors or tracks progress of a deliverable with the purpose keeping up to date or current with developments and changes.

Grants	Receives a document to confirm in written report form that a process or activity was completed. i.e. To receive equipment OEM / Contractor start-up test reports
Identifies	Recognizes or establishes requirements, criteria or actions to be included in the project deliverables.
Implements	Conducts or completes a task, activity or deliverable to move the construction process or commissioning process forward.
Inputs	Adds data or information to a document or database with the intention of keeping current and accurate information. i.e. Input data to PI forms
Issues	Sends out, publishes and distributes a document for the purpose of sharing information with the construction and design team.
Maintains	Continues or sustains a document or action with the purpose of keeping the deliverable current with the construction process.
Manages	Takes responsibility and succeeds in accomplishing a deliverable with the purpose of moving the construction process forward.
Monitors	Observes, detects and records an activity or task.
Participates	Takes an active role in a deliverable with the purpose of witnessing or reviewing the process or outcome of a test or activity.
Prepares	Creates or makes ready a deliverable to move the construction process forward.
Produces	Creates a document to be issued to or used in the construction / commissioning process. i.e. Commissioning specification
Provides	Makes available a document or feedback as required by the deliverable. Delivers support material or physical work as required by the task.
Recommends	Advises an alternative or suggests a choice or course of action in order to move an activity, task or deliverable forward.
Requests	Asks for an activity, document or deliverable to be completed with the purpose of moving the construction process forward.
Responds	Replies or answers by some action (written or verbal) to an activity or deliverable.
Reviews	Examines and provides written feedback on content, purpose or results of commissioning activities or deliverables. Tracks progress of development process. Each party is to provide an individual written report.
Re-works	To revise or correct a task, activity or deliverable.
Adjustments	Revises or corrects a task, activity or deliverable, including minor changes.
Sign-off	Physically acknowledge receipt or acceptance of a deliverable and make written confirmation.
Submits	Presents or provides an activity or deliverable with the purpose of gaining approval or review comments.
Updates	Brings up to date, as by adding new information or making corrections as required to maintain currency of the deliverable.
Validates	Substantiates and or confirms authenticity of a report or result with the purpose of completing an activity or deliverable.

Utilizes	Applies a document / task / process or deliverable.
Verifies	Physically witness inputs and responses of specific processes. Generally related to an executed construction or commissioning process. i.e. Verify 10% of actual TAB reading Reviews, witnesses and monitors the execution of deliverables with the purpose of preparing for certification or acceptance by an organization or authority.
Witnesses	To be present at an activity as an active spectator as formally requested or required by the construction documents. Be prepared to sign off on the results of the activity.

Part 3 EXECUTION

3.1 NOT USED .1 NOT USED

END OF SECTION

PART 1 GENERAL

1.1 RELATED SECTIONS

.1 Section 01 74 21 - Construction/Demolition Waste Management And Disposal.

.2 Section 01 74 11 - Cleaning.

.3 Section 07 84 00 - Firestopping.

.4 Section 23 08 02 - Cleaning and Start-up of Mechanical Piping Systems.

1.2 REFERENCES

.1 Canadian General Standards Board (CGSB)

.1 CAN/CGSB-1.181-99, Ready-Mixed Organic Zinc-Rich Coating.

1.3 WASTE MANAGEMENT AND DISPOSAL

.1 Separate and recycle waste materials in accordance with Section 01 74 21 - Construction/Demolition Waste Management And Disposal.

.2 Remove from site and dispose of packaging materials at appropriate recycling facilities.

.3 Collect and separate for disposal paper, plastic, polystyrene, corrugated cardboard, packaging material in appropriate on-site for recycling in accordance with Waste Management Plan.

.4 Divert unused metal materials from landfill to approved metal recycling facility.

Part 2 PRODUCTS

2.1 NOT USED

.1 Not Used.

PART 3 EXECUTION

2.2 CONNECTIONS TO EQUIPMENT

.1 In accordance with manufacturer's instructions unless otherwise indicated.

.2 Use valves and either unions or flanges for isolation and ease of maintenance and

assembly.

.3 Use double swing joints when equipment mounted on vibration isolation and when piping subject to movement.

2.3 CLEARANCES

.1 Provide clearance around systems, equipment and components for observation of operation, inspection, servicing, maintenance and as recommended by manufacturer.

.2 Provide space for disassembly, removal of equipment and components as recommended by manufacturer or as indicated (whichever is greater) without interrupting operation of other system, equipment, components.

2.4 DRAINS

.1 Install piping with grade in direction of flow except as indicated.

.2 Install drain valve at low points in piping systems, at equipment and at section isolating valves.

.3 Pipe each drain valve discharge separately to above floor drain. Discharge to be visible.

.4 Drain valves: NPS 3/4 gate or globe valves unless indicated otherwise, with hose end male thread, cap and chain.

2.5 AIR VENTS

.1 Install automatic air vents at high points in piping systems.

.2 Install isolating valve at each automatic air valve.

.3 Install drain piping to approved location and terminate where discharge is visible.

2.6 DIELECTRIC COUPLINGS

.1 General: Compatible with system, to suit pressure rating of system.

.2 Locations: Where dissimilar metals are joined.

.3 NPS 2 and under: isolating unions or bronze valves.

.4 Over NPS 2: Isolating flanges.

2.7 PIPEWORK INSTALLATION

.1 Screwed fittings jointed with Teflon tape.

.2 Protect openings against entry of foreign material.

.3 Install to isolate equipment and allow removal without interrupting operation of other equipment or systems.

.4 Assemble piping using fittings manufactured to ANSI standards.

3.6

.5 Saddle type branch fittings may be used on mains if branch line is no larger than half the size of main.

.1 Hole saw (or drill) and ream main to maintain full inside diameter of branch line prior to welding saddle.

.6 Install exposed piping, equipment, rectangular cleanouts and similar items parallel or perpendicular to building lines.

.7 Install concealed pipework to minimize furring space, maximize headroom, conserve space.

.8 Slope piping, except where indicated, in direction of flow for positive drainage and venting.

.9 Install, except where indicated, to permit separate thermal insulation of each pipe.

.10 Group piping wherever possible and as indicated.

.11 Ream pipes, remove scale and other foreign material before assembly.

.12 Use eccentric reducers at pipe size changes to ensure positive drainage and venting.

.13 Provide for thermal expansion as indicated.

.14 Valves:

.1 Install in accessible locations.

.2 Remove interior parts before soldering.

.3 Install with stems above horizontal position unless otherwise indicated.

.4 Valves accessible for maintenance without removing adjacent piping.

.5 Install globe valves in bypass around control valves.

.6 Use ball or butterfly valves at branch take-offs for isolating purposes except where otherwise specified.

.7 Install butterfly valves between weld neck flanges to ensure full compression of liner.

.8 Use chain operators on valves NPS 2-1/2 and larger where installed more than 2400 mm above floor in Mechanical Rooms.

.15 Check Valves:

.1 Install silent check valves on discharge of pumps and in vertical pipes with downward flow and elsewhere as indicated.

.2 Install swing check valves in horizontal lines on discharge of pumps and elsewhere as indicated.

PIPEWORK INSTALLATION – *(Cont'd)*

2.8 SLEEVES

.1 General: Install where pipes pass through masonry, concrete structures, fire rated assemblies, and elsewhere as indicated.

.2 Material: Schedule 40 black steel pipe.

.3 Construction: Foundation walls and where sleeves extend above finished floors to have annular fins continuously welded on at mid-point.

.4 Sizes: 6 mm minimum clearance between sleeve and un-insulated pipe or between sleeve and insulation.

.5 Installation:

.1 Concrete, masonry walls, concrete floors on grade: Terminate flush with finished surface.

.2 Other floors: Terminate 25 mm above

finished floor.

.3 Before installation, paint exposed exterior surfaces with heavy application of zinc-rich paint to CAN/CGSB-1.181.

.6 Sealing:

.1 Foundation walls and below grade floors: Fire retardant, waterproof non-hardening mastic.

.2 Elsewhere: Provide space for fire-stopping. Maintain fire rating integrity.

.3 Sleeves installed for future use: Fill with lime plaster or other easily removable filler.

.4 Ensure no contact between copper pipe or tube and sleeve.

2.9 ESCUTCHEONS

.1 Install on pipes passing through walls, partitions, floors, and ceilings in finished areas.

.2 Construction: One piece type with set screws. Chrome or nickel plated brass or type 302 stainless steel.

.3 Sizes: Outside diameter to cover opening or sleeve. Inside diameter to fit around pipe or outside of insulation if so provided.

2.10 PREPARATION FOR FIRESTOPPING

.1 Material and installation within annular space between pipes, ducts, insulation and adjacent fire separation to Section 07 84 00 – Fire stopping.

.2 Un-insulated unheated pipes not subject to movement: No special preparation.

.3 Un-insulated heated pipes subject to movement: Wrap with non-combustible smooth material to permit pipe movement without damaging fire stopping material or installation.

3.9

.4 Insulated pipes and ducts: Ensure integrity of insulation and vapour barriers.

PREPARATION FOR FIRESTOPPING – *(Cont'd)*

2.11 FLUSHING OUT OF PIPING SYSTEMS

.1 In accordance with Section 23 08 02 - Cleaning and Start-up of Mechanical Piping Systems.

.2 Before start-up, clean interior of piping systems in accordance with requirements of Section 01 74 11 - Cleaning supplemented as specified in relevant sections of Division 15.

.3 Preparatory to acceptance, clean and refurbish equipment and leave in operating condition, including replacement of filters in piping systems.

2.12 PRESSURE TESTING OF EQUIPMENT AND PIPEWORK

.1 Advise Engineer 48 hours minimum prior to performance of pressure tests.

.2 Pipework: Test as specified in relevant section 23 08 02.

.3 Maintain specified test pressure without loss for 12 hours minimum unless specified for longer period of time in relevant section 23 08 02.

.4 Prior to tests, isolate equipment and other parts which are not designed to withstand test pressure or media.

.5 Conduct tests in presence of Engineer or his designate.

.6 Pay costs for repairs or replacement, retesting, and making good. Owner to determine whether repair or replacement is appropriate.

.7 Insulate or conceal work only after approval and certification of tests by Owner.

END OF SECTION

PART 1 GENERAL

1.1 RELATED SECTIONS

.1 Section 01 74 19 - Construction/Demolition Waste Management And Disposal.

1.2 REFERENCES

.1 American National Standards Institute/American Society of Mechanical Engineers (ANSI/ASME)

.1 ANSI/ASME B31.1-1998, Power Piping.

.2 ANSI/ASME B31.3-2000 Process Piping Addenda A.

.3 ANSI/ASME B31.3-2001 Process Piping Addenda B.

.4 ANSI/ASME Boiler and Pressure Vessel Code-1998:

Section V: Nondestructive Examination.

.1 Section IX: Welding and Brazing Qualifications.

.2 American National Standards Institute/American Water Works Association (ANSI/AWWA)

.1 ANSI/AWWA C206-97 Field Welding of Steel Water Pipe.

.3 American Welding Society (AWS)

.1 AWS C1.1-2000, Recommended Practices for Resistance Welding.

.2 AWS Z49.1-1999, Safety Welding, Cutting and Allied Process.

.3 AWS W1-2000, Welding Inspection Handbook..

.4 Canadian General Standards Board (CGSB)

.1 CAN/CGSB-48.2-92, Spot Radiography of Welded Butt Joints in Ferrous Materials.

.5 Canadian Standards Association (CSA International)

.1 CSA W47.2-M1987 (R1998), Certification of Companies for Fusion Welding of Aluminum.

.2 CSA W48 series-01, Filler Metals and Allied Materials for Metal Arc Welding.

.3 CSA B51-97, Boiler, Pressure Vessel and Pressure Piping Code.

.4 CSA-W117.2-01, Safety in Welding, Cutting and Allied Processes.

.5 CSA W178.1-02, Certification of Welding Inspection Organizations.

.6 CSA W178.2-01, Certification of Welding Inspectors.

1.3 QUALIFICATIONS

.1 Welders

.1 Welding qualifications in accordance with CSA B51.

1.3 QUALIFICATIONS – *(Cont'd)*

.2 Use qualified and licensed welders possessing certificate for each procedure performed from authority having jurisdiction.

.3 Furnish welder's qualifications to Engineer.

.4 Each welder to possess identification symbol issued by authority having jurisdiction.

.5 Certification of companies for fusion welding of aluminum in accordance with CSA W47.2.

.2 Inspectors

.1 Inspectors qualified to CSA W178.2.

1.4 QUALITY ASSURANCE

.1 Registration of welding procedures in accordance with CSA B51.

.2 Copy of welding procedures available for inspection.

.3 Safety in welding, cutting and allied processes in accordance with CSA-W117.2.

1.5 WASTE MANAGEMENT AND DISPOSAL

.1 Separate and recycle waste materials in accordance with Section 01 74 21 - Construction/Demolition Waste Management And Disposal and with the Waste Reduction Workplan.

.2 Remove from site and dispose of all packaging

materials at appropriate recycling facilities.

.3 Collect and separate for disposal paper, plastic, polystyrene, corrugated cardboard, packaging material in appropriate on-site bins for recycling in accordance with Waste Management Plan.

.4 Divert unused metal materials from landfill to metal recycling facility as approved by Engineer.

PART 2 PRODUCTS

1.6 ELECTRODES

.1 Electrodes: in accordance with CSA W48 Series.

PART 3 EXECUTION

1.7 WORKMANSHIP

.1 Welding: in accordance with ANSI/ASME B31.1 and B31.3, ANSI/ASME Boiler and Pressure Vessel Code, Sections I and IX and ANSI/AWWA C206, using procedures conforming to AWS B3.0, AWS C1.1, and applicable requirements of provincial authority having jurisdiction.

1.8 INSTALLATION REQUIREMENTS

.1 Identify each weld with welder's identification symbol.

.2 Backing rings:

.1 Where used, fit to minimize gaps between ring and pipe bore.

.2 Do not install at orifice flanges.

.3 Fittings:

.1 NPS 2 and smaller: install welding type sockets.

.2 Branch connections: install welding tees or forged branch outlet fittings.

1.9 INSPECTION AND TESTS - GENERAL

.1 Review weld quality requirements and defect limits of applicable codes and standards with Provincial Authority before work is started.

REQUIREMENTS

.2 Formulate "Inspection and Test Plan" in co-operation with Provincial Authority.

.3 Do not conceal welds until they have been inspected, tested and approved by inspector.

.4 Provide for inspector to visually inspect welds during early stages of welding procedures in accordance with Welding Inspection Handbook. Repair or replace defects as required by codes and as specified.

1.10 SPECIALIST EXAMINATIONS AND TESTS

.1 General

.1 Perform examinations and tests by specialist qualified in accordance with CSA W178.1 and CSA W178.2 and approved by Provincial Authority.

.2 To ANSI/ASME Boiler and Pressure Vessels Code, Section V, CSA B51 and requirements of authority having jurisdiction.

.3 Inspect and test 10% of welds in accordance with "Inspection and Test Plan" by non-destructive visual examination and magnetic particle (hereinafter referred to as "particle") tests.

.2 Hydrostatically test welds to requirements of ANSI/ASME B31.1.

.3 Visual examinations: include entire circumference of weld externally and wherever possible internally.

.4 Failure of visual examinations:

.1 Upon failure of welds by visual examination, perform additional testing as directed by Provincial Authority of up to 10% of welds, selected at random.

1.11 DEFECTS CAUSING REJECTION

.1 As described in ANSI/ASME B31.1 and ANSI/ASME Boiler and Pressure Vessels Code.

1.12 REPAIR OF

.1 Re-inspect and re-test repaired or re-worked

WELDS WHICH FAILED TESTS

welds at Contractor's expense.

END OF SECTION

PART 1 GENERAL

1.1 SUMMARY

.1 Section Includes:

.1 Bronze - valves.

.2 Related Sections:

.1 Section 01 33 00 - Submittal Procedures.

.2 Section 01 74 19 - Construction/Demolition Waste Management And Disposal.

.3 Section 01 70 12 - Safety Requirements.

.4 Section 01 78 00 - Closeout Submittals.

.5 Section 23 05 01 - Installation of Pipework.

1.2 REFERENCES

.1 American National Standards Institute (ANSI)/ American Society of Mechanical Engineers (ASME).

.1 ANSI/ASME B1.20.1-1983 (R2001), Pipe Threads, General Purpose (Inch).

.2 ANSI/ASME B16.18-2001, Cast Copper Alloy Solder Joint Pressure Fittings.

.2 American Society for Testing and Materials International, (ASTM).

.1 ASTM A276-04, Specification for Stainless Steel Bars and Shapes.

.2 ASTM B62-02, Specification for Composition Bronze or Ounce Metal Castings.

.3 ASTM B283-99a, Specification for Copper and Copper Alloy Die Forgings (Hot-Pressed).

.4 ASTM B505/B505M-02, Specification for Copper-Base Alloy Continuous Castings.

.3 Manufacturers Standardization Society of the Valve and Fittings Industry, Inc. (MSS).

.1 MSS-SP-25-1998, Standard Marking System for Valves, Fittings, Flanges and Unions.

.2 MSS-SP-80-2003, Bronze Gate Globe, Angle and Check Valves.

.3 MSS-SP-110-1996, Ball Valves, Threaded,

Socket-Welding, Solder Joint, Grooved and Flared Ends.

.4 ASTM B584-00, Specification for Copper Alloy Sand Castings for General Applications.

1.3 SUBMITTALS

.1 Submittals in accordance with Section 01 33 00 - Submittal Procedures.

.2 Product Data: submit WHMIS MSDS - Material Safety Data Sheets in accordance with Section 02 62 00.01 - Hazardous Materials.

.1 Submit shop drawings and product data in accordance with Section 01 30 00 - Submittal Procedures.

.2 Submit data for valves specified in this section.

.3 Closeout Submittals:

.1 Submit maintenance data for incorporation into manual specified in Section 01 78 00 - Closeout Submittals.

1.4 QUALITY ASSURANCE

.1 Health and Safety:

.1 Do construction occupational health and safety in accordance with Section 01 70 12 - Safety Requirements.

.2 All grooved joint couplings, fittings, valves, and specialties shall be the products of a single manufacturer. Grooving tools shall be of the same manufacturer as the grooved components.

1.5 DELIVERY STORAGE AND DISPOSAL

.1 Waste Management and Disposal:

.2 Separate and recycle waste materials in accordance with Section 01 74 19 - Construction/Demolition Waste Management And Disposal.

.3 Collect and separate for disposal paper, plastic, polystyrene, corrugated cardboard packaging material in appropriate on-site bins for recycling in accordance with Waste Management Plan.

1.6 MAINTENANCE .1 Provide Maintenance Data.

PART 2 PRODUCTS

1.7 MATERIALS .1 Valves:

.1 Except for specialty valves, to be single manufacturer.

.2 All products to have CRN registration numbers.

.2 End Connections:

.1 Connection into adjacent piping/tubing:

.1 Steel pipe systems: Screwed ends to ANSI/ASME B1.20.1.

.2 Copper tube systems: Solder ends to ANSI/ASME B16.18.

.1 Grooved ends to copper tube dimensions and CSA B242.

.2 Push-to-connect ends to ANSI/ASME B16.22 and manufacturer’s standards.

.3 Gate Valves:

.1 Requirements common to gate valves, unless specified otherwise:

.1 Standard specification: MSS SP-80.

.2 Bonnet: union with hexagonal shoulders.

.3 Connections: screwed with hexagonal shoulders.

.4 Inspection and pressure testing: to MSS SP-80. Tests to be hydrostatic.

.5 Packing: non-asbestos.

.6 Handwheel: non-ferrous.

.7 Handwheel Nut: bronze to ASTM B62.

.2 NPS 2 and under, non-rising stem, solid wedge disc, Class 125

.1 Body: with long disc guides, screwed bonnet with stem retaining nut.

.2 Operator: Handwheel.

.3 NPS 2 and under, non-rising stem, solid

wedge disc, Class 150:

.1 Body: with long disc guides, screwed bonnet with stem retaining nut.

.2 Operator: Handwheel.

.4 NPS 2 and under, rising stem, split wedge disc, Class 125:

.1 Body: with long disc guides, screwed bonnet.

.2 Disc: split wedge, bronze to ASTM B283, loosely secured to stem.

.3 Operator: Handwheel.

.5 NPS 2 and under, rising stem, solid wedge disc, Class 125:

.1 Body: with long disc guides, screwed bonnet.

.2 Operator: Handwheel.

.4 Globe Valves:

.1 Requirements common to globe valves, unless specified otherwise:

.1 Standard specification: MSS SP-80.

.2 Bonnet: union with hexagonal shoulders.

.3 Connections: screwed with hexagonal shoulders.

.4 Pressure testing: to MSS SP-80. Tests to be hydrostatic.

.5 Stuffing box: threaded to bonnet with gland follower, packing nut, high grade non-asbestos packing.

.6 Handwheel: non-ferrous.

.7 Handwheel Nut: bronze to ASTM B62.

.2 NPS 2 and under, composition disc, Class 125:

.1 Body and bonnet: screwed bonnet.

.2 Disc and seat: renewable rotating PTFE disc regrindable bronze seat, loosely secured to bronze stem to ASTM B505.

.3 Operator: Handwheel.

.3 NPS 2 and under, composition disc, Class 150:

.1 Body and bonnet: union bonnet.

.2 Disc and seat: renewable rotating PTFE disc in easily removable disc holder, regrindable bronze seat, loosely secured to bronze stem to ASTM B505.

.3 Operator: Handwheel.

.4 NPS 2 and under, plug disc, Class 150, screwed ends:

.1 Body and bonnet: union bonnet.

.2 Disc and seat ring: tapered plug type with disc stem ring of AISI S420 stainless steel to ASTM A276, loosely secured to stem.

.3 Operator: Handwheel.

.5 Angle valve, NPS 2 and under, composition disc, Class 150:

.1 Body and bonnet: union bonnet.

.2 Disc and seat: renewable rotating PTFE disc in slip-on easily removable disc holder having integral guides, regrindable bronze seat, loosely secured to stem.

.3 Operator: Handwheel.

.5 Check Valves:

.1 Requirements common to check valves, unless specified otherwise:

.1 Standard specification: MSS SP-80.

.2 Connections: screwed with hexagonal shoulders.

.2 NPS 2 and under, swing type, bronze disc, Class 125:

.1 Body: Y-pattern with integral seat at 45 degrees, screw-in cap with hex head.

.2 Disc and seat: renewable rotating disc, two-piece hinge disc construction; seat: regrindable.

.3 NPS 2 and under, swing type, bronze disc:

.1 Body: Y-pattern with integral seat at 45 degrees, screw-in cap with hex head.

.2 Disc and seat: renewable rotating

disc, two-piece hinge disc construction; seat: regrindable.

.4 NPS 2 and under, swing type, composition disc, Class 200:

.1 Body: Y-pattern with integral seat at 45 degrees, screw-in cap with hex head.

.2 Disc: renewable rotating disc of number 6 composition to suit service conditions, bronze two-piece hinge disc construction.

.5 NPS 2 and under, horizontal lift type, composition disc, Class 150:

.1 Body: with integral seat, union bonnet ring with hex shoulders, cap.

.2 Disc: renewable PTFE rotating disc in disc holder having guides top and bottom, of bronze to ASTM B62.

.6 NPS 2 and under, vertical lift type, bronze disc, Class 125:

.1 Disc: rotating disc having guides top and bottom, disc guides, retaining rings.

.7 NPS 2 and under, vertical or horizontal, lift type, 1380-kPa CWP:

.1 Disc: 301 stainless steel, center guided.

.6 Ball Valves:

.1 NPS 2 and under:

.1 Body and cap: cast high tensile bronze to ASTM B62.

.2 Pressure rating: Class125.

.3 Connections: Screwed ends to ANSI B1.20.1 and with hexagonal shoulders.

.4 Stem: tamperproof ball drive.

.5 Stem packing nut: external to body.

.6 Ball and seat: replaceable stainless steel solid ball and teflon seats.

.7 Stem seal: TFE with external packing nut.

.8 Operator: removable lever handle.

.10 Butterfly Valves:

.1 NPS 2-1/2 through NPS 6.

.1 Body: cast bronze per CDA-836 (85-5-5-5).

.2 Pressure rating: 2065-kPa CWP.

.3 Connections: copper tube dimensioned grooved ends.

.4 Disc: ductile iron per ASTM A536 with elastomer coating.

.5 Stem: integrally cast with disc.

.6 Stem Nuts: nickel plated 416 stainless steel.

.7 Operator: lever or gear operater.

PART 3 EXECUTION

1.8 INSTALLATION

.1 Install rising stem valves in upright position with stem above horizontal.

.2 Remove internal parts before soldering.

.3 Install valves with unions at each piece of equipment arranged to allow servicing, maintenance, and equipment removal.

1.9 VERIFICATION

.1 Contractor's Verification, include:

.1 Materials and resources.

.2 Storage and collection of recyclables.

.3 Construction waste management.

.4 Resource reuse.

.5 Local/regional materials.

.6 Low-emitting materials.

END OF SECTION

PART 1 GENERAL

1.1 SUMMARY

.1 Section Includes:

.1 Valves, gate, globe, and check.

.2 Related Sections:

.1 Section 01 33 00 - Submittal Procedures.

.2 Section 01 74 21 - Construction/Demolition Waste Management And Disposal.

.3 Section 01 70 12 - Safety Requirements.

.4 Section 01 78 00 - Closeout Submittals.

.5 Section 23 05 05 - Installation of Pipework.

1.2 REFERENCES

.1 American National Standards Institute (ANSI)/American Society of Mechanical Engineers (ASME).

.1 ANSI/ASME B16.1-1998, Cast Iron Pipe Flanges and Flanged Fittings.

.2 American Society for Testing and Materials International (ASTM).

.1 ASTM A49-01, Specification for Heat-Treated Carbon Steel Joint Bars.

.2 ASTM A126-95 (2001), Specification for Gray Iron Castings for Valves, Flanges, and Pipe Fittings.

.3 ASTM B61-93, Specification for Steam or Valve Bronze Castings.

.4 ASTM B62-93, Specification for Composition Bronze or Ounce Metal Castings.

.5 ASTM B85-03, Specification for Aluminum-Alloy Die Castings.

.6 ASTM B209-04, Specification for Aluminum and Aluminum-Alloy Sheet and Plate.

.3 Manufacturers Standardization Society of the Valve and Fittings Industry, Inc. (MSS).

.1 MSS SP-70-1998, Cast Iron Gate Valves, Flanged and Threaded Ends.

.2 MSS SP-71-1997, Grey Iron Swing Check Valves, Flanged and Threaded Ends.

.3 MSS SP-82-1992, Valve Pressure Testing Methods.

.4 MSS SP-85-2002, Cast Iron Globe and Angle Valves, Flanged and Threaded Ends.

1.3 SUBMITTALS

.1 Submittals in accordance with Section 01 33 00 - Submittal Procedures.

.2 Product Data: submit WHMIS MSDS - Material Safety Data Sheets in accordance with Section 02 62 00.01 - Hazardous Materials.

.1 Submit shop drawings and product data in accordance with Section 01 30 00 - Submittal Procedures.

.2 Submit data for valves specified in this section.

.3 Closeout Submittals:

.1 Submit maintenance data for incorporation into manual specified in Section 01 78 00 - Closeout Submittals.

1.4 QUALITY ASSURANCE

.1 Health and Safety:

.1 Do construction occupational health and safety in accordance with Section 01 35 29.06 - Health and Safety Requirements.

1.5 DELIVERY STORAGE AND DISPOSAL

.1 Waste Management and Disposal:

.2 Separate and recycle waste materials in accordance with Section 01 74 21 - Construction/Demolition Waste Management And Disposal.

.3 Collect and separate for disposal paper, plastic, polystyrene, corrugated cardboard, packaging material in appropriate on-site bins for recycling in accordance with Waste Management Plan.

1.6 MAINTENANCE

.1 Extra Materials:

.2 Furnish following spare parts:

.1 Valve seats: one for every 10 valves

each size, minimum 1.

.2 Discs: one for every 10 valves, each size. Minimum 1.

.3 Stem packing: one for every 10 valves, each size. Minimum 1.

.4 Valve handles: 2 of each size.

.5 Gaskets for flanges: one for every 10 flanged joints.

PART 2 PRODUCTS

1.7 MATERIAL

.1 Valves:

.1 Except for specialty valves, to be of single manufacturer.

.2 Standard specifications:

.1 Gate valves: MSS SP-70.

.2 Globe valves: MSS SP-85.

.3 Check valves: MSS SP-71.

.3 Requirements common to valves, unless specified otherwise:

.1 Body, bonnet: cast iron to ASTM B209 Class B.

.2 Connections: flanged ends with 2 mm raised face with serrated finish to ANSI B16.1.

.3 Inspection and pressure testing: to MSS SP-82.

.4 Bonnet gasket: non-asbestos.

.5 Stem: to have precision-machined Acme or 60 degrees V threads, top screwed for handwheel nut.

.6 Stuffing box: non-galling two-piece ball-jointed packing gland, gland bolts and nuts.

.7 Gland packing: non-asbestos.

.8 Handwheel: Die-cast aluminum alloy to ASTM B85 or malleable iron to ASTM A49. Nut of bronze to ASTM B62.

.9 Identification tag: with catalogue number, size, other pertinent data.

.4 All products to have CRN registration

numbers.

1.8 GATE VALVES

.1 NPS 2 1/2 - 8, non rising stem, inside screw, bronze trim, solid wedge disc:

.1 Body and multiple-bolted bonnet: with bosses in body and bonnet for taps and drains, full length disc guides designed to ensure correct re-assembly. Class 125.

.2 Disc: solid offset taper wedge, bronze to ASTM B62.

.3 Seat rings: renewable bronze to ASTM B62, screwed into body.

.4 Stem: bronze to ASTM B62.

.5 Disc: solid offset taper wedge, cast iron to ASTM A126 Class B, secured to wrought steel stem.

2.2

.6 Seat: Integral with body.

.7 Stem: wrought steel.

.8 Operator: Handwheel.

.2 NPS 2 1/2-8, outside screw and yoke (OS&Y), bronze trim, solid wedge disc:

.1 Body and multiple-bolted bonnet: with bosses in body and bonnet for taps and drains, full length disc guides designed to ensure correct re-assembly, yoke, yoke hub, yoke sleeve and nut. Class 125.

.2 Disc: solid offset taper wedge, bronze to ASTM B62 up to NPS 3, cast iron with bronze disc rings on other sizes, secured to stem through integral forged T-head disc-stem connection.

.3 Seat rings: renewable bronze screwed into body.

.4 Stem: nickel-plated steel.

.5 Disc: solid offset taper all-cast iron, secured to stem through integral forged T-head disc-stem connection.

.6 Seat rings: integral with body.

.7 Stem: nickel-plated steel.

.8 Pressure-lubricated operating mechanism.

.9 Operator: Handwheel.

GATE VALVES – *(Cont'd)*

1.9 GLOBE VALVES

.1 NPS 2 1/2 - 10, OSY:

.1 Body: with multiple-bolted bonnet.

.2 WP: 860 kPa steam, 1.4 MPa CWP.

.3 Bonnet-yoke gasket: non-asbestos.

.4 Disc: bronze to ASTM B62, fully guided from bottom, securely yet freely connected to stem for swivel action and accurate engagement with disc.

.5 Seat ring: renewable, regrindable, screwed into body.

.6 Stem: bronze to ASTM B62.

.7 Operator: Handwheel.

1.10 VALVE OPERATORS

.1 Install valve operators as follows:
Actuators: To HVAC Controls.

1.11 CHECK VALVES

.1 Swing check valves, Class 125:

.1 Body and bolted cover: with tapped and plugged opening on each side for hinge pin. Flanged ends: plain faced with smooth finish.

.1 Up to NPS 16: cast iron to ASTM A126 Class B.

.2 NPS 18 and over: cast iron to ASTM A126 Class C.

.2 Ratings:

.1 NPS 2 1/2 - 12: 860 kPa steam; 1.4 MPa CWP.

.2 NPS 14 - 16: 860 kPa steam; 1.03 MPa CWP.

.3 NPS 18 and over: 1.03 MPa CWP.

.3 Disc: rotating for extended life.

.1 Up to NPS 6: bronze to ASTM B 62.

.2 NPS 8 and over: bronze-faced cast iron.

.4 Seat rings: renewable bronze to ASTM B62 screwed into body.

.5 Hinge pin, bushings: renewable bronze to ASTM B62.

.6 Disc: A126 Class B, secured to stem, rotating for extended life.

.7 Seat: cast iron, integral with body.

.8 Hinge pin: exelloy; bushings: malleable iron.

.9 Identification tag: fastened to cover.

.10 Hinge: galvanized malleable iron.

1.12 GROOVED END BUTTERFLY VALVES

.1 Butterfly valves: to MSS-SP-67 Application: Isolating cells or section of multiple component equipment (eg. multi-section coils, multi-cell cooling towers):

.1 NPS2” and over: Grooved ends

.2 2068 kPa and be both bi-directional and dead end service capable to full rated pressure. Ductile iron body with blow –out proof stainless steel stems and nickel coated ductile iron disc. Seat shall be “EPDM” and have a full 360* continuous contact with the seating surface.

.3 Valve Operators: Lever or Gear

PART 3 EXECUTION

1.13 INSTALLATION

.1 Install rising stem valves in upright position with stem above horizontal.

.2 Grooved End Valves to be supplied by the same manufacture of the grooved fittings.

.3 Grooved end “Valves” shall be installed in accordance with the manufacturer’s written installation instructions. Grooved ends shall be clean and free from indentations, projections. Gaskets shall be verified as suitable for the intended service prior to installation. Gaskets shall be molded and produced by the coupling manufacturer. The grooved coupling manufacturer’s factory trained representative shall provide on-site training for contractor’s field personnel in the use of grooving tools, application of

groove, and installation of grooved joint products. The manufacturer’s representative shall periodically visit the jobsite and review installation. Contractor shall remove and replace any joints deemed improperly installed.

1.14 VERIFICATION

.1 Contractor's Verification, include:

- .1 Materials and resources.
- .2 Storage and collection of recyclables.
- .3 Construction waste management.
- .4 Resource reuse.
- .5 Local/regional materials.
- .6 Low-emitting materials.

END OF SECTION

PART 1 GENERAL

1.1 SUMMARY

.1 Section Includes:

.1 hangers and supports for mechanical piping, ducting and equipment.

1.2 REFERENCES

.1 American National Standards Institute/American Society of Mechanical Engineers (ANSI/ASME)

.1 ANSI/ASME B31.1-04, Power Piping.

.2 American Society for Testing and Materials International (ASTM)

.1 ASTM A125-1996 (R2001), Specification for Steel Springs, Helical, Heat-Treated.

.2 ASTM A307-04, Specification for Carbon Steel Bolts and Studs, 60,000 PSI Tensile Strength.

.3 ASTM A563-04a, Specification for Carbon and Alloy Steel Nuts.

.3 Factory Mutual (FM)

.4 Health Canada/Workplace Hazardous Materials Information System (WHMIS)

.1 Material Safety Data Sheets (MSDS).

.5 Manufacturer's Standardization Society of the Valves and Fittings Industry (MSS)

.1 MSS SP58-2002, Pipe Hangers and Supports - Materials, Design and Manufacture.

.2 ANSI/MSS SP69-2003, Pipe Hangers and Supports - Selection and Application.

.3 MSS SP89-2003, Pipe Hangers and Supports - Fabrication and Installation Practices.

.6 Underwriter's Laboratories of Canada (ULC)

1.3 SYSTEM DESCRIPTION

.1 Design Requirements:

.1 Construct pipe hanger and support to manufacturer's recommendations utilizing manufacturer's regular production components, parts and assemblies.

.2 Base maximum load ratings on allowable stresses prescribed by MSS SP58.ASME B31.1 or

.3 Ensure that supports, guides, anchors do not transmit excessive quantities of heat to building structure.

1.3 SYSTEM DESCRIPTION – *(Cont'd)*

.4 Design hangers and supports to support systems under conditions of operation, allow free expansion and contraction, prevent excessive stresses from being introduced into pipework or connected equipment.

.5 Provide for vertical adjustments after erection and during commissioning. Amount of adjustment in accordance with MSS SP58.

1.4 SUBMITTALS

.1 Submittals: in accordance with Section 01 33 00 - Submittal Procedures.

.2 Submit shop drawings and product data for following items:

.1 Bases, hangers and supports.

.2 Connections to equipment and structure.

.3 Structural assemblies.

.3 Quality assurance submittals: submit following in accordance with Section 01 33 00 - Submittal Procedures.

.1 Certificates: submit certificates signed by manufacturer certifying that materials comply with specified performance characteristics and physical properties.

.2 Instructions: submit manufacturer's installation instructions.

.4 Closeout Submittals:

.1 Provide maintenance data for incorporation into manual specified in Section 01 78 00 - Closeout Submittals.

1.5 QUALITY ASSURANCE

.1 Health and Safety:

.1 Do construction occupational health and

safety in accordance with Section 01 70 12 - Safety Requirements.

1.6 DELIVERY, STORAGE, AND HANDLING

.1 Packing, shipping, handling and unloading:

.1 Deliver, store and handle in accordance with Section 01 61 00 - Common Product Requirements.

.2 Deliver, store and handle materials in accordance with manufacturer's written instructions.

.2 Waste Management and Disposal:

.1 Construction/Demolition Waste Management and Disposal: separate waste materials for reuse and recycling in accordance with Section 01 74 21 - Construction/Demolition Waste Management and Disposal.

PART 2 PRODUCTS

1.7 GENERAL

.1 Fabricate hangers, supports and sway braces in accordance with ANSI B31.1 and MSS SP58.

.2 Use components for intended design purpose only. Do not use for rigging or erection purposes.

1.8 PIPE HANGERS

.1 Finishes:

.1 Pipe hangers and supports: galvanized after manufacture.

.2 Use electro-plating galvanizing process.

.3 Ensure steel hangers in contact with copper piping are copper plated.

.2 Upper attachment structural: suspension from lower flange of I-Beam:

.1 Cold piping NPS 2 maximum: malleable iron C-clamp with hardened steel cup point setscrew, locknut and carbon steel retaining clip.

.1 Rod: 9 mm ULC listed.

.2 Cold piping NPS 2 1/2 or greater, hot piping: malleable iron beam clamp, eye

rod, jaws and extension with carbon steel retaining clip, tie rod, nuts and washers, ULC listed to MSS-SP58 and MSS-SP69.

.3 Upper attachment structural: suspension from upper flange of I-Beam:

.1 Cold piping NPS 2 maximum: ductile iron top-of-beam C-clamp with hardened steel cup point setscrew, locknut and carbon steel retaining clip, ULC listed.

.2 Cold piping NPS 2 1/2 or greater, hot piping: malleable iron top-of-beam jaw-clamp with hooked rod, spring washer, plain washer and nut ULC listed.

.4 Upper attachment to concrete:

.1 Ceiling: carbon steel welded eye rod, clevis plate, clevis pin and cotters with weldless forged steel eye nut. Ensure eye 6 mm minimum greater than rod diameter.

.2 Concrete inserts: wedge shaped body with knockout protector plate ULC listed to MSS SP69.

.5 Shop and field-fabricated assemblies:

.1 Trapeze hanger assemblies.

.2 Steel brackets.

2.3 PIPE HANGERS – *(Cont'd)*

.3 Sway braces for seismic restraint systems: to Section 23 05 48.

.4 Pipe Racks

.6 Hanger rods: threaded rod material to MSS SP58:

.1 Ensure that hanger rods are subject to tensile loading only.

.2 Provide linkages where lateral or axial movement of pipework is anticipated.

.3 Do not use 22mm or 28 mm rod.

.7 Pipe attachments: material to MSS SP58:

.1 Attachments for steel piping: carbon steel galvanized.

.2 Attachments for copper piping: copper plated black steel.

.3 Use insulation shields for hot pipework.

.4 Oversize pipe hangers and supports.

.8 Adjustable clevis: material to MSS SP69 ULC listed, clevis bolt with nipple spacer and vertical adjustment nuts above and below clevis.

.1 Ensure "U" has hole in bottom for riveting to insulation shields.

.9 Yoke style pipe roll: carbon steel yoke, rod and nuts with cast iron roll, to MSS SP69.

.10 U-bolts: carbon steel to MSS SP69 with 2 nuts at each end to ASTM A563.

.1 Finishes for steel pipework: galvanized.

.2 Finishes for copper, glass, brass or aluminum pipework: epoxy coated.

.11 Pipe rollers: cast iron roll and roll stand with carbon steel rod to MSS SP69.

1.9 RISER CLAMPS

.1 Steel or cast iron pipe: galvanized carbon steel to MSS SP58, type 42, ULC listed.

.2 Copper pipe: carbon steel copper plated to MSS SP58, type 42.

.3 Bolts: to ASTM A307.

.4 Nuts: to ASTM A563.

1.10 INSULATION PROTECTION SHIELDS

.1 Insulated cold piping:

.1 64 kg/m^3 density insulation plus insulation protection shield to: MSS SP69, galvanized sheet steel. Length designed for maximum 3 m span, min. 300 mm long.

2.5 INSULATION PROTECTION SHIELDS – *(Cont'd)*

.2 Insulated hot piping:

.1 Curved plate 300 mm long, with edges turned up, welded-in centre plate for pipe sizes NPS 12 and over, carbon steel

to comply with MSS SP69.

1.11 EQUIPMENT SUPPORTS

.1 Fabricate equipment supports not provided by equipment manufacturer from structural grade steel meeting requirements of Section 05 12 00 - Structural Steel. Submit calculations with shop drawings.

1.12 EQUIPMENT ANCHOR BOLTS AND TEMPLATES

.1 Provide templates to ensure accurate location of anchor bolts.

PART 3 EXECUTION

1.13 MANUFACTURER 'S INSTRUCTIONS

.1 Compliance: comply with manufacturer's written recommendations or specifications, including product technical bulletins, handling, storage and installation instructions, and datasheet.

1.14 INSTALLATION

.1 Install in accordance with:

.1 manufacturer's instructions and recommendations.

.2 Vibration Control Devices:

.1 Install on piping systems at pumps, boilers, and as indicated.

.3 Clamps on riser piping:

.1 Support independent of connected horizontal pipework using riser clamps and riser clamp lugs welded to riser.

.2 Bolt-tightening torques to industry standards.

.3 Steel pipes: install below coupling or shear lugs welded to pipe.

.4 Cast iron pipes: install below joint.

.4 Clevis plates:

.1 Attach to concrete with 4 minimum concrete inserts, one at each corner.

3.2 INSTALLATION – *(Cont'd)*

.5 Provide supplementary structural steelwork

where structural bearings do not exist or where concrete inserts are not in correct locations.

.6 Use approved constant support type hangers where:

.1 Vertical movement of pipework is 13 mm or more,

.2 Transfer of load to adjacent hangers or connected equipment is not permitted.

.7 Use variable support spring hangers where:

.1 Transfer of load to adjacent piping or to connected equipment is not critical.

.2 Variation in supporting effect does not exceed 25 % of total load.

1.15 HANGER SPACING

.1 Plumbing piping: to Canadian Plumbing Code authority having jurisdiction.

.2 Fire protection: to applicable fire code.

.3 Copper piping: up to NPS 1/2: every 1.5 m.

.4 Flexible joint roll groove pipe: in accordance with table below, but not less than one hanger at joints.

.5 Within 300 mm of each elbow.

Maximum Pipe Size : NPS	Maximum Spacing	Steel
up to 1-1/4	2.1 m	1.8 m
1-1/2	2.7 m	2.4 m
2	3.0 m	2.7 m
2-1/2	3.6 m	3.0 m
3	3.6 m	3.0 m
3-1/2	3.9 m	3.3 m
4	4.2 m	3.6 m
5	4.8 m	
6	5.1 m	
8	5.7 m	
10	6.6 m	
12	6.9 m	

.6 Pipework greater than NPS 12: to MSS SP69.

1.16 HANGER INSTALLATION

.1 Install hanger so that rod is vertical under operating conditions.

.2 Adjust hangers to equalize load.

3.4 HANGER INSTALLATION – *(Cont'd)*

.3 Support from structural members. Where structural bearing does not exist or inserts are not in suitable locations, provide supplementary structural steel members.

1.17 HORIZONTAL MOVEMENT

.1 Angularity of rod hanger resulting from horizontal movement of pipework from cold to hot position not to exceed 4 degrees from vertical.

.2 Where horizontal pipe movement is less than 13 mm, offset pipe hanger and support so that rod hanger is vertical in the hot position.

1.18 FINAL ADJUSTMENT

.1 Adjust hangers and supports:

.1 Ensure that rod is vertical under operating conditions.

.2 Equalize loads.

.2 Adjustable clevis:

.1 Tighten hanger load nut securely to ensure proper hanger performance.

.2 Tighten upper nut after adjustment.

.3 C-clamps:

.1 Follow manufacturer's recommended written instructions and torque values when tightening C-clamps to bottom flange of beam.

.4 Beam clamps:

.1 Hammer jaw firmly against underside of beam.

1.19 FIELD QUALITY CONTROL

.1 Site Tests: conduct following tests in accordance with Section 01 45 00 - Quality Control and submit report as described in PART 1 - SUBMITTALS.

.2 Manufacturer's Field Services:

.1 Obtain written report from manufacturer verifying compliance of Work, in handling, installing, applying, protecting and cleaning of product and submit Manufacturer's Field Reports as

described in PART 1 - SUBMITTALS.

.2 Provide manufacturer's field services consisting of product use recommendations and periodic site visits for inspection of product installation in accordance with manufacturer's instructions.

.3 Schedule site visits, to review Work, as directed in PART 1 - QUALITY ASSURANCE.

3.7 FIELD QUALITY CONTROL – *(Cont'd)*

.3 Contractor's Verification, include:

.1 Materials and resources.

.2 Storage and collection of recyclables.

.3 Construction waste management.

.4 Resource reuse.

.5 Recycled content.

.6 Local/regional materials.

.7 Certified wood.

.8 Low-emitting materials.

END OF SECTION

PART 1 GENERAL

1.1 SUMMARY

.1 Section Includes:

.1 Materials and requirements for the identification of piping systems, duct work, valves and controllers, including the installation and location of identification systems.

1.2 REFERENCES

.1 Canadian Gas Association (CGA)

.1 CSA/CGA B149.1-05, Natural Gas and Propane Installation Code.

.2 Canadian General Standards Board (CGSB)

.1 CAN/CGSB-1.60-97, Interior Alkyd Gloss Enamel.

.2 CAN/CGSB-24.3-92, Identification of Piping Systems.

.3 National Fire Protection Association (NFPA)

.1 NFPA 13-2002, Standard for the Installation of Sprinkler Systems.

.2 NFPA 14-2003, Standard for the Installation of Standpipe and Hose Systems.

1.3 SUBMITTALS

.1 Product Data:

.2 Submittals: in accordance with Section 01 33 00 - Submittal Procedures

.3 Product data to include paint colour chips, other products specified in this section.

.4 Samples:

.1 Submit samples in accordance with Section 01 33 00 - Submittal Procedures.

.2 Samples to include nameplates, labels, tags, lists of proposed legends.

1.4 QUALITY ASSURANCE

.1 Quality assurance submittals: submit following in accordance with Section 01 33 00 - Submittal Procedures.

.2 Health and Safety:

.1 Do construction occupational health and

safety in accordance with Section 01 70 12 - Safety Requirements.

1.5 DELIVERY, STORAGE, AND HANDLING

.1 Packing, shipping, handling and unloading:

.1 Deliver, store and handle in accordance with Section 01 61 00 - Common Product Requirements.

.2 Deliver, store and handle materials in accordance with manufacturer's written instructions.

.2 Waste Management and Disposal:

.1 Construction/Demolition Waste Management and Disposal: separate waste materials for reuse and recycling in accordance with Section 01 74 19 - Construction/Demolition Waste Management and Disposal.

.2 Dispose of unused paint, coating material at official hazardous material collections site approved by Engineer.

.3 Do not dispose of unused paint, coating material into sewer system, into streams, lakes, onto ground or in locations where it will pose health or environmental hazard.

PART 2 PRODUCTS

1.6 MANUFACTURER 'S EQUIPMENT NAMEPLATES

.1 Plastic laminate nameplate mechanically fastened to each piece of equipment by manufacturer. Metal plates for equipment operating over 60°C.

.2 Lettering and numbers raised or recessed.

.3 Information to include, as appropriate:

.1 Equipment: manufacturer's name, model, size, serial number, capacity.

.2 Motor: voltage, Hz, phase, power factor, duty, frame size.

1.7 SYSTEM NAMEPLATES

.1 Colours:

.1 Hazardous: red letters, white background.

.2 Elsewhere: black letters, white background (except where required otherwise by applicable codes).

.2 Construction:

.1 3 mm thick laminated plastic, matte finish, with square corners, letters accurately aligned and machine engraved into core.

1.8

.1 Sizes:

.1 Conform to following table:

Size	Sizes (mm)	No. of Lines	Height
1	10 x 50	1	3
2	13 x 75	1	5
3	13 x 75	2	3
4	20 x 100	1	8
5	20 x 100	2	5
6	20 x 200	1	8
7	25 x 125	1	12
8	25 x 125	2	8
9	35 x 200	1	20

.2 Use maximum of 25 letters/numbers per line.

.2 Locations:

.1 Terminal cabinets, control panels: use size #5.

.2 Equipment in Mechanical Rooms: use size #9.

.3 Identification for PWGSC Preventive Maintenance Support System (PMSS):

.1 Use arrangement of Main identifier, Source identifier, Destination identifier.

.2 Equipment in Mechanical Room:

.1 Main identifier: size #9.

.2 Source and Destination identifiers: size #6.

.3 Terminal cabinets, control panels: size #5.

.3 Equipment elsewhere: sizes as appropriate.

1.9 EXISTING

.1 Apply existing identification system to new

IDENTIFICATION SYSTEMS

work.

.2 Where existing identification system does not cover for new work, use identification system specified this section.

.3 Before starting work, obtain written approval of identification system from Engineer.

1.10 PIPING SYSTEMS GOVERNED BY CODES

.1 Identification:

.1 Natural gas: to CSA/CGA B149.1 authority having jurisdiction.

.2 Propane gas: to CSA/CGA B149.1authority having jurisdiction.

.3 Sprinklers: to NFPA 13.

.4 Standpipe and hose systems: to NFPA 14.

1.11 IDENTIFICATION OF PIPING SYSTEMS

.1 Identify contents by background colour marking, pictogram (as necessary), legend; direction of flow by arrows. To CAN/CGSB 24.3 except where specified otherwise.

.2 Pictograms:

.1 Where required: Workplace Hazardous Materials Information System (WHMIS) regulations.

.3 Legend:

.1 Block capitals to sizes and colours listed in CAN/CGSB 24.3.

.4 Arrows showing direction of flow:

.1 Outside diameter of pipe or insulation less than 75 mm: 100 mm long x 50 mm high.

.2 Outside diameter of pipe or insulation 75 mm and greater: 150 mm long x 50 mm high.

.3 Use double-headed arrows where flow is reversible.

.5 Extent of background colour marking:

.1 To full circumference of pipe or insulation.

.2 Length to accommodate pictogram, full length of legend and arrows.

.6 Materials for background colour marking, legend, arrows:

.1 Pipes and tubing 20 mm and smaller: waterproof and heat-resistant pressure sensitive plastic marker tags.

.2 Other pipes: pressure sensitive vinyl with protective overcoating, waterproof contact adhesive undercoating, suitable for ambient of 100% RH and continuous operating temperature of 150 degrees C and intermittent temperature of 200 degrees C.

.7 Colours and Legends:

.1 Where not listed, obtain direction from Engineer.

.2 Colours for legends, arrows: to following table:

Background colour:	Legend, arrows:
Yellow	BLACK
Green	WHITE
Red	WHITE

Background colour marking and legends for piping systems:

Contents	Background colour	markir
Hot water heating supply		Yellow
Hot water heating return		Yellow
Make-up water	Yellow	MAKE-UP WTR
Domestic hot water supply		Yellow
Dom. HWS recirculation		Yellow
Domestic cold water supply		Green
Storm water	Green	STORM
Sanitary	Green	SAN
Plumbing vent	Green	SAN. VENT
Diesel fuel oil	Yellow	DIESEL FUEL OIL
Lubricating oil #1 thru #6	Yellow (#’S 1 Thru 6)	LUB. (
Natural gas	to Codes	
Propane	to Codes	
Gas regulator vents	to Codes	
Compressed air (<700kPa)		Green
Compressed air (>700kPa)		Yellow
Fire protection water		Red
Sprinklers	Red	SPRINKLERS

1.12 IDENTIFICATION DUCTWORK

.1 50 mm high stencilled letters and directional arrows 150 mm long x 50 mm high.

SYSTEMS

.2 Colours: back, or co-ordinated with base colour to ensure strong contrast.

.3 Identify Supply/Exhaust/Return System with labels as indicated on Mechanical Drawings e.g. “AHU SG-1 Supply”.

.4 Identify “Supply/Return/Exhaust” systems wit directional arrows as indicated e.g. “AHU SG1 Supply”.

1.13 VALVES, CONTROLLERS

.1 Brass tags with 12 mm stamped identification data filled with black paint.

.2 Include flow diagrams for each system, of approved size, showing charts and schedules with identification of each tagged item, valve type, service, function, normal position, location of tagged item.

1.14 CONTROLS COMPONENTS IDENTIFICATION

.1 Identify all systems, equipment, components, controls, sensors with system nameplates specified in this section.

.2 Inscriptions to include function and (where appropriate) fail-safe position.

1.15 LANGUAGE

.1 Identification in bilingual.

.2 Use one nameplate and label for each language.

PART 3 EXECUTION

1.16 MANUFACTURER 'S INSTRUCTIONS

.1 Compliance: comply with manufacturer's written recommendations or specifications, including product technical bulletins, handling, storage and installation instructions, and datasheet.

1.17 TIMING

.1 Provide identification only after painting specified Section 09 91 23 - Interior Painting has been completed.

1.18 INSTALLATION

.1 Perform work in accordance with CAN/CGSB-24.3

except as specified otherwise.

.2 Provide ULC and/or CSA registration plates as required by respective agency.

.3 Identify systems, equipment to conform to PWGSC PMSS.

1.19 NAMEPLATES

.1 Locations:

.1 In conspicuous location to facilitate easy reading and identification from operating floor.

Standoffs:

.2 Provide for nameplates on hot and/or insulated surfaces.

.2 Protection:

.1 Do not paint, insulate or cover.

1.20 LOCATION OF IDENTIFICATION ON PIPING AND DUCTWORK SYSTEMS

.1 On long straight runs in open areas in boiler rooms, equipment rooms, galleries, tunnels: at not more than 17 m intervals and more frequently if required to ensure that at least one is visible from any one viewpoint in operating areas and walking aisles.

.2 Adjacent to each change in direction.

.3 At least once in each small room through which piping or ductwork passes.

.4 On both sides of visual obstruction or where run is difficult to follow.

.5 On both sides of separations such as walls, floors, partitions.

.6 Where system is installed in pipe chases, ceiling spaces, galleries, confined spaces, at entry and exit points, and at access openings.

.7 At beginning and end points of each run and at each piece of equipment in run.

.8 At point immediately upstream of major manually operated or automatically controlled valves, and dampers. Where this is not possible, place identification as close as possible, preferably on upstream side.

.9 Identification easily and accurately readable

from usual operating areas and from access points.

.1 Position of identification approximately at right angles to most convenient line of sight, considering operating positions, lighting conditions, risk of physical damage or injury and reduced visibility over time due to dust and dirt.

1.21 VALVES, CONTROLLERS

.1 Valves and operating controllers, except at plumbing fixtures, radiation, or where in plain sight of equipment they serve: Secure tags with non-ferrous chains or closed "S" hooks.

.2 Install one copy of flow diagrams, valve schedules mounted in frame behind non-glare glass where directed by Engineer. Provide one copy (reduced in size if required) in each operating and maintenance manual.

.3 Number valves in each system consecutively.

1.22 FIELD QUALITY CONTROL

.1 Contractor's Verification, include:

.1 Materials and resources.

.2 Storage and collection of recyclables.

.3 Construction waste management.

.4 Resource reuse.

.5 Recycled content.

.6 Local/regional materials.

.7 Certified wood.

.8 Low-emitting materials.

1.23 CLEANING

.1 Proceed in accordance with Section 01 74 11 - Cleaning.

.2 Upon completion and verification of performance of installation, remove surplus materials, excess materials, rubbish, tools and equipment.

END OF SECTION

PART 1 GENERAL

1.1 SUMMARY

.1 TAB is used throughout this Section to describe the process, methods and requirements of testing, adjusting and balancing for HVAC.

.2 TAB means to test, adjust and balance to perform in accordance with requirements of Contract Documents and to do other work as specified in this section.

1.2 QUALIFICATIONS OF TAB PERSONNEL

.1 Submit names of personnel to perform TAB to Owner within 90 days of award of contract.

.2 Provide documentation confirming qualifications, successful experience.

.3 TAB: performed in accordance with the requirements of standard under which TAB Firm's qualifications are approved:

.1 Associated Air Balance Council, (AABC) National Standards for Total System Balance, MN-1-2002.

.2 Sheet Metal and Air Conditioning Contractors' National Association (SMACNA), HVAC TAB HVAC Systems - Testing, Adjusting and Balancing - 2002.

.4 Recommendations and suggested practices contained in the TAB Standard: mandatory.

.5 Use TAB Standard provisions, including checklists, and report forms to satisfy Contract requirements.

.6 Use TAB Standard for TAB, including qualifications for TAB Firm and Specialist and calibration of TAB instruments.

.7 Where instrument manufacturer calibration recommendations are more stringent than those listed in TAB Standard, use manufacturer's recommendations.

.8 TAB Standard quality assurance provisions such as performance guarantees form part of this contract.

.1 For systems or system components not covered in TAB Standard, use TAB

procedures developed by TAB Specialist.

.2 Where new procedures, and requirements, are applicable to Contract requirements have been published or adopted by body responsible for TAB Standard used (AABC, NEBB, or TABB), requirements and recommendations contained in these procedures and requirements are mandatory.

1.3 PURPOSE OF TAB

.1 Test to verify proper and safe operation, determine actual point of performance, evaluate qualitative and quantitative performance of equipment, systems and controls at design, average and low loads using actual or simulated loads.

.2 Adjust and regulate equipment and systems to meet specified performance requirements and to achieve specified interaction with other related systems under normal and emergency loads and operating conditions.

.3 Balance systems and equipment to regulate flow rates to match load requirements over full operating ranges.

.4 Advise OWNER and Mechanical Contractor if additional sheaves required to meet balance point, Contractor shall pay for sheaves.

1.4 EXCEPTIONS

.1 TAB of systems and equipment regulated by codes, standards to satisfaction of authority having jurisdiction.

1.5 CO-ORDINATION

.1 Schedule time required for TAB (including repairs, re-testing) into project construction and completion schedule to ensure completion before acceptance of project.

.2 Do TAB of each system independently and subsequently, where interlocked with other systems, in unison with those systems.

1.6 PRE-TAB REVIEW

.1 Review contract documents before project construction is started and confirm in

writing to OWNER adequacy of provisions for TAB and other aspects of design and installation pertinent to success of TAB.

.2 Review specified standards and report to OWNER in writing proposed procedures which vary from standard.

.3 During construction, co-ordinate location and installation of TAB devices, equipment, accessories, measurement ports and fittings.

1.7 START-UP

.1 Follow start-up procedures as recommended by equipment manufacturer unless specified otherwise.

.2 Follow special start-up procedures specified elsewhere in Division 23.

1.8 OPERATION OF SYSTEMS DURING TAB

.1 Operate systems for length of time required for TAB and as required by Owner for verification of TAB reports.

1.9 START OF TAB

.1 Notify Owner 14 days prior to start of TAB.

.2 Start TAB when building is essentially completed, including:

.3 Installation of ceilings, doors, windows, other construction affecting TAB.

.4 Application of weather stripping, sealing, and caulking.

.5 Pressure, leakage, other tests specified elsewhere Division 23.

.6 Provisions for TAB installed and operational.

.7 Start-up, verification for proper, normal and safe operation of mechanical and associated electrical and control systems affecting TAB including but not limited to:

.1 Proper thermal overload protection in place for electrical equipment.

.2 Air systems:

.1 Filters in place, clean.

.2 Duct systems clean.

.3 Ducts, air shafts, ceiling plenums

are airtight to within specified tolerances.

.4 Correct fan rotation.

.5 Fire, smoke, volume control dampers installed and open.

.6 Coil fins combed, clean.

.7 Access doors, installed, closed.

.8 Outlets installed, volume control dampers open.

.3 Water systems:

.1 Flushed, filled, vented.

.2 Correct pump rotation.

.3 Strainers in place, baskets clean.

.4 Isolating and balancing valves installed, open.

.5 Calibrated balancing valves installed, at factory settings.

.6 Chemical treatment systems complete, operational.

1.10 APPLICATION TOLERANCES

.1 Do TAB to following tolerances of design values:

.1 HVAC systems: plus 5%, minus 5%.

.2 Hydronic systems: plus or minus 10%.

1.11 ACCURACY TOLERANCES

.1 Measured values accurate to within plus or minus 2% of actual values.

1.12 INSTRUMENTS

.1 Prior to TAB, submit to Owner list of instruments used together with serial numbers.

.2 Calibrate in accordance with requirements of most stringent of referenced standard for either applicable system or HVAC system.

.3 Calibrate within 28 days of TAB. Provide certificate of calibration to OWNERRepresentative.

1.13 SUBMITTALS

.1 Submit, prior to commencement of TAB:

.2 Proposed methodology and procedures for performing TAB if different from referenced

standard.

1.14 PRELIMINARY TAB REPORT

.1 Submit for checking and approval of Owner, prior to submission of formal TAB report, sample of rough TAB sheets. Include:

.1 Details of instruments used.

.2 Details of TAB procedures employed.

.3 Calculations procedures.

.4 Summaries.

1.15 TAB REPORT

.1 Submit format for approval with referenced standard.

.2 TAB report to show results in English units and to include:

.1 Project record drawings.

.2 System schematics.

.3 Submit 4 bound copies of TAB Report to Owner for verification and approval, in bilingual.

1.16 VERIFICATION

.1 Reported results subject to verification by Owner.

.2 Provide personnel and instrumentation to verify up to 30% of reported results.

.3 Number and location of verified results as directed by Owner.

.4 Pay costs to repeat TAB as required to satisfaction of Owner.

1.17 SETTINGS

.1 After TAB is completed to satisfaction of Owner, replace drive guards, close access doors, lock devices in set positions, ensure sensors are at required settings.

.2 Permanently mark settings to allow restoration at any time during life of facility. Do not eradicate or cover markings.

1.18 COMPLETION OF TAB

.1 TAB considered complete when final TAB Report received and approved by DCC.

1.19 AIR SYSTEMS

.1 Standard: TAB to AABC, SMACNA and ASHRAE.

.2 Do TAB of systems, equipment, components, controls specified Division 23 following systems, equipment, components, controls:

.1 F12/13

.2 F15

.3 F9

.4 F20/21.

.3 Qualifications: personnel performing TAB/current member in good standing of AABC qualified to standards of AABC.

.4 Quality assurance: perform TAB under direction of supervisor qualified to standards of AABC.

.5 Measurements: to include as appropriate for systems, equipment, components, controls: air velocity, static pressure, flow rate, pressure drop (or loss), temperatures (dry bulb, wet bulb, dewpoint), duct cross-sectional area, RPM, electrical power, voltage, noise, vibration.

.6 Locations of equipment measurements: to include as appropriate:

.1 Inlet and outlet of dampers, filter, coil, humidifier, fan, other equipment causing changes in conditions.

.2 At controllers, controlled device.

.7 Locations of systems measurements to include as appropriate: main ducts, main branch, sub-branch, run-out (or grille, register or diffuser).

1.20 OTHER TAB REQUIREMENTS

.1 General requirements applicable to work specified this paragraph:

.1 Qualifications of TAB personnel: as for air systems specified this section.

.2 Quality assurance: as for air systems specified this section.

.2 Building pressure conditions:

.1 Adjust HVAC systems, equipment, controls to ensure specified pressure condition

indicated below at all times.

.2 TAB procedures:

.1 Directional airflow to be achieved as shown in schematic on mechanical drawing M-5.01.

PART 2 PRODUCTS

1.21 NOT USED .1 Not used.

PART 3 EXECUTION

1.22 NOT USED .1 Not used.

END OF SECTION

PART 1 GENERAL

1.1 SUMMARY

.1 Section Includes:

.1 Materials and methods for pressure testing ducts over 5m in length, forming part of a supply, return or exhaust ductwork system directly or indirectly connected to air handling equipment.

.2 Related Sections:

.1 Section 01 33 00 - Submittal Procedures.

.2 Section 01 70 12 - Safety Requirements.

.3 Section 01 45 00 - Quality Control.

.4 Section 01 74 21 - Construction/Demolition Waste Management and Disposal.

.5 Section 01 78 00 - Closeout Submittals.

.6 Section 01 91 01 - Commissioning.

1.2 REFERENCES

.1 Health Canada/Workplace Hazardous Materials Information System (WHMIS)

.1 Material Safety Data Sheets (MSDS).

.2 Sheet Metal and Air Conditioning Contractor's National Association (SMACNA)

.1 SMACNA HVAC Air Duct Leakage Test Manual, 2nd Edition, 2012.

1.3 SUBMITTALS

.1 Make submittals in accordance with Section 01 33 00 - Submittal Procedures.

.2 Test Reports: submit certified test reports from approved independent testing laboratories indicating compliance with specifications for specified performance characteristics and physical properties. Include pressure test information and results as follows:

.1 Submit proposed report form and test report format to Engineer for approval at least6 weeks before proposed date of first series of tests. Do not start tests until approval received in writing from Engineer.

.2 Prepare report of results and submit to

Engineer within 72 hours of completion of tests. Include:

.1 Schematic of entire system.

.2 Schematic of section under test showing test site.

.3 Required and achieved static pressures.

.4 Orifice differential pressure at test sites.

.5 Permissible and actual leakage flow rate (L/s) for test sites.

.6 Witnessed certification of results.

.3 Include test reports in final TAB report.

.4 Certificates: submit certificates signed by manufacturer certifying that materials comply with specified performance characteristics and physical properties.

.5 Instructions: submit manufacturer's installation instructions.

.6 Manufacturer's field reports specified.

1.4 QUALITY ASSURANCE

.1 Pre-Installation Meetings:

.1 Convene pre-installation meeting one week prior to beginning work of this Section and on-site installations in accordance with Section 01 45 00 – Quality Control.

.1 Verify project requirements.

.2 Review installation and substrate conditions.

.3 Co-ordination with other building subtrades.

.4 Review manufacturer's installation instructions and warranty requirements.

.2 Health and Safety:

.1 Do construction occupational health and safety in accordance with Section 01 35 29 – Health & Safety Requirements.

PART 2 PRODUCTS

1.5 TEST INSTRUMENTS

.1 Test apparatus to include:

.1 Fan capable of producing required static pressure.

.2 Duct section with calibrated orifice plate mounted and accurately located pressure taps.

.3 Flow measuring instrument compatible with the orifice plate.

.4 Calibration curves for orifice plates used.

.5 Flexible duct for connecting to ductwork under test.

.6 Smoke bombs for visual inspections.

.2 Test apparatus: accurate to within +/-3% of flow rate and pressure.

.3 Submit details of test instruments to be used to Engineer at least 6 weeks before anticipated start date.

.4 Test instruments: calibrated and certificate of calibration deposited with Engineer no more than 28 days before start of tests.

.5 Re-calibrated every six months thereafter.

1.6 EQUIPMENT LEAKAGE TOLERANCES

.1 Equipment and system components such as VAV boxes, duct heating leakage: 2%.

PART 3 EXECUTION

1.7 MANUFACTURER 'S INSTRUCTIONS

.1 Compliance: comply with manufacturer's written recommendations or specifications, including product technical bulletins, handling, storage and installation instructions, and datasheet.

1.8 TEST PROCEDURES

.1 Maximum lengths of ducts to be tested consistent with capacity of test equipment.

.2 Section of duct to be tested to include:

.1 Fittings, branch ducts, tap-ins.

.3 Repeat tests until specified pressures are attained. Bear costs for repairs and repetition to tests.

.4 Base partial system leakage calculations on SMACNA HVAC Air Duct Leakage Test Manual.

.5 Seal leaks that can be heard or felt, regardless of their contribution to total leakage.

1.9 SITE TOLERANCES

.1 System leakage tolerances specified are stated as percentage of total flow rate handled by system. Pro-rate specified system leakage tolerances. Leakage for sections of duct systems: not to exceed total allowable leakage.

.2 Leakage tests on following systems not to exceed specified leakage rates.

.1 Small duct systems up to 250 Pa: leakage 2%.

.2 Large low pressure duct systems up to 500 Pa: leakage 2%.

.3 HP duct systems up to 1000 Pa pressure classification, including upstream side of VAV boxes: leakage 3%.

.3 Evaluation of test results to use surface area of duct and pressure in duct as basic parameters.

1.10 TESTING

.1 Test ducts before installation of insulation or other forms of concealment.

.2 Test after seals have cured.

.3 Test when ambient temperature will not affect effectiveness of seals, and gaskets.

.4 Tests Required:

.1 All supply, return, exhaust systems

.2 FIELD QUALITY CONTROL

.5 Manufacturer's Field Services.

.1 Have manufacturer of products, supplied under this Section, review Work involved

in the handling, installation/application, protection and cleaning, of its products and submit written reports, in acceptable format, to verify compliance of Work with Contract.

.2 Manufacturer's Field Services: provide manufacturer's field services consisting of product use recommendations and periodic site visits for inspection of product installation in accordance with manufacturer's instructions.

.3 Schedule site visits, to review Work, at stages listed:

.1 After delivery and storage of products, and when preparatory Work, or other Work, on which the Work of this Section depends, is complete but before installation begins.

.2 Twice during progress of Work at 25% and 60% complete.

.3 Upon completion of the Work, after cleaning is carried out.

.4 Obtain reports, within 3 days of review, and submit, immediately, to Owner.

.6 Contractor's Verification, include:

.1 Materials and resources.

.2 Storage and collection of recyclables.

.3 Construction waste management.

.4 Resource reuse.

.5 Recycled content.

.6 Local/regional materials.

.7 Certified Wood.

.8 Low-emitting materials.

.7 Performance Verification:

.1 Owner to sample witness tests and to verify reported results. Advise 72 hours in advance.

.2 To be certified by same TAB agency approved by Owner to undertake TAB on this project.

1.11 CLEANING

.1 Upon completion and verification of performance of installation, remove surplus materials, excess materials, rubbish, tools and equipment.

END OF SECTION

PART 1 GENERAL

1.1 RELATED SECTIONS

.1 Section 01 33 00 - Submittal Procedures.

.2 Section 01 74 20 - Construction/Demolition Waste Management And Disposal.

.3 Section 23 05 29 - Hangers and Supports for HVAC Piping and Equipment.

1.2 REFERENCES

.1 American Society of Heating, Refrigeration and Air Conditioning Engineers (ASHRAE)

.1 ANSI/ASHRAE/IESNA 90.1-01, SI; Energy Standard for Buildings Except Low-Rise Residential Buildings.

.2 American Society for Testing and Materials International, (ASTM)

.1 ASTM B209M-14, Specification for Aluminum and Aluminum Alloy Sheet and Plate (Metric).

.2 ASTM C335/335M-10, Edition 1, Test Method for Steady State Heat Transfer Properties of Horizontal Pipe Insulation.

.3 ASTM C449-07(2013), Standard Specification for Mineral Fiber-Hydraulic-Setting Thermal Insulating and Finishing Cement.

.4 ASTM C553-13, Specification for Mineral Fiber Blanket Thermal Insulation for Commercial and Industrial Applications.

.5 ASTM C612-14, Specification for Mineral Fiber Block and Board Thermal Insulation.

.6 ASTM C921-10, Standard Specification for Thermal Insulation for Use in Contact with Austenitic Stainless Steel.

.3 Canadian General Standards Board (CGSB)

.1 CGSB 51-GP-52Ma-89, Vapour Barrier, Jacket and Facing Material for Pipe, Duct and Equipment Thermal Insulation.

.4 Thermal Insulation Association of Canada (TIAC): National Insulation Standards

(R1999).

.5 Underwriters Laboratories of Canada (ULC)

.1 CAN/ULC-S102-10, Surface Burning Characteristics of Building Materials and Assemblies.

.2 CAN/ULC-S701-11, Thermal Insulation Polyotrene, Boards and Pipe Covering.

1.3 DEFINITIONS

.1 For purposes of this section:

.1 "CONCEALED" - insulated mechanical services and equipment in suspended ceilings and non-accessible chases and furred-in spaces.

.2 "EXPOSED" - will mean "not concealed" as defined herein.

.3 Insulation systems - insulation material, fasteners, jackets, and other accessories.

.2 TIAC Codes:

.1 CRD: Code Round Ductwork,

.2 CRF: Code Rectangular Finish.

1.4 SHOP DRAWINGS

.1 Submit shop drawings in accordance with Section 01 33 00 - Submittal Procedures.

.2 Submit for approval manufacturer's catalogue literature related to installation, fabrication for duct jointing recommendations.

1.5 SAMPLES

.1 Submit samples in accordance with Section 01 33 00 - Submittal Procedures.

.2 Submit for approval: complete assembly of each type of insulation system, insulation, coating, and adhesive proposed. Mount sample on 12 mm plywood board. Affix typewritten label beneath sample indicating service.

1.6 MANUFACTURER S' INSTRUCTIONS

.1 Submit manufacturer's installation instructions in accordance with Section 01 33 00 - Submittal Procedures.

.2 Installation instructions to include procedures used and installation standards

achieved.

1.7 QUALIFICATIONS

.1 Installer: specialist in performing work of this section, and have at least 3 years successful experience in this size and type of project, member of TIAC.

1.8 DELIVERY, STORAGE AND HANDLING

.1 Deliver materials to site in original factory packaging, labelled with manufacturer's name, address.

.2 Protect from weather and construction traffic.

.3 Protect against damage from any source.

.4 Store at temperatures and conditions recommended by manufacturer.

1.9 WASTE MANAGEMENT AND DISPOSAL

.1 Separate and recycle waste materials in accordance with Section 01 74 21 - Construction/Demolition Waste Management And Disposal.

.2 Remove from site and dispose of packaging materials at appropriate recycling facilities.

.3 Collect and separate for disposal paper, plastic, polystyrene, corrugated cardboard packaging material in appropriate on-site for recycling in accordance with Waste Management Plan.

.4 Divert unused metal materials from landfill to metal recycling facility approved by Owner.

.5 Divert unused adhesive material from landfill to official hazardous material collections site approved by Owner.

.6 Do not dispose of unused adhesive materials into sewer systems, into lakes, streams, onto ground or in other locations where it will pose health or environmental hazard.

PART 2 PRODUCTS

1.10 FIRE AND SMOKE RATING

.1 In accordance with CAN/ULC-S102:

.1 Maximum flame spread rating: 25.

.2 Maximum smoke developed rating: 50.

1.11 INSULATION

.1 Mineral fibre: as specified includes glass fibre, rock wool, slag wool.

.2 Thermal conductivity ("k" factor) not to exceed specified values at 24°C mean temperature when tested in accordance with ASTM C335.

.3 TIAC Code C-1: Rigid mineral fibre board to ASTM C612, with factory applied vapour retarder jacket to CGSB 51-GP-52Ma as scheduled in PART 3 of this Section.

.4 TIAC Code C-2: Mineral fibre blanket to ASTM C553 faced with factory applied vapour retarder jacket to CGSB 51-GP-52Ma as scheduled in PART 3 of this section.

.1 Mineral fibre: to ASTM C553.

.2 Jacket: to CGSB 51-GP-52Ma.

.3 Maximum "k" factor: to ASTM C553.

1.12 JACKETS

.1 Canvas:

.1 220 gm/m^2 cotton, plain weave, treated with dilute fire retardant lagging adhesive to ASTM C921.

.2 Lagging adhesive: Compatible with insulation.

.3 Aluminum:

.1 To ASTM B209 with moisture barrier as scheduled in PART 3 of this section.

.2 Thickness: 0.50 mm sheet.

.3 Finish: Smooth.

.4 Jacket banding and mechanical seals: 12 mm wide, 0.5 mm thick stainless steel.

.1 Stainless steel:

.5 Type: 304.

.6 Thickness: 0.50 mm sheet.

.7 Finish: Smooth.

.8 Jacket banding and mechanical seals: 19 mm wide, 0.5 mm thick stainless steel.

1.13 ACCESSORIES

.1 Vapour retarder lap adhesive:

.1 Water based, fire retardant type, compatible with insulation.

.2 Indoor Vapour Retarder Finish:

.1 Vinyl emulsion type acrylic, compatible with insulation.

.3 Insulating Cement: hydraulic setting on mineral wool, to ASTM C449-07(2013).

.4 ULC Listed Canvas Jacket:

.1 220 gm/m^2 cotton, plain weave, treated with dilute fire retardant lagging adhesive to ASTM C921.

.5 Outdoor Vapour Retarder Mastic:

.1 Vinyl emulsion type acrylic, compatible with insulation.

.2 Reinforcing fabric: Fibrous glass, untreated 305 g/m^2.

.6 Tape: self-adhesive, aluminum, reinforced, 50 mm wide minimum.

.7 Contact adhesive: quick-setting

.8 Canvas adhesive: washable.

.9 Tie wire: 1.5 mm stainless steel.

.10 Banding: 12 mm wide, 0.5mm thick stainless steel.

.11 Facing: 25mm galvanized steel hexagonal wire mesh stitched on one face of insulation.

.12 Fasteners: 2mm diameter pins with 35mm diameter or square clips, length to suit thickness of insulation.

PART 3 EXECUTION

1.14 PRE-INSTALLATION REQUIREMENTS

.1 Pressure testing of ductwork systems complete, witnessed and certified.

.2 Surfaces clean, dry, free from foreign material.

1.15 INSTALLATION

.1 Install in accordance with TIAC National

Standards.

.2 Apply materials in accordance with manufacturers instructions and as indicated.

.3 Use two layers with staggered joints when required nominal thickness exceeds 75 mm.

.4 Maintain uninterrupted continuity and integrity of vapour retarder jacket and finishes.

.1 Hangers, supports to be outside vapour retarder jacket.

.5 Supports, Hangers in accordance with Section 23 05 29 - Hangers and Supports for HVAC Piping and Equipment.

.1 Apply high compressive strength insulation where insulation may be compressed by weight of ductwork.

.6 Fasteners: At 300 mm oc in horizontal and vertical directions, minimum two rows each side.

1.16 DUCTWORK INSULATION SCHEDULE

.1 Insulation types and thicknesses: Conform to following table:

	TIAC Code	Vapour Retarder	Thi
Rectangular cold and dual temperature supply air ducts	C-1	yes	50
Round cold and dual temperature supply air ducts	C-2	yes	50
Rectangular warm air ducts (return)			C-1
Round warm air ducts	C-1		no
Supply downstream valve, return and exhaust ducts exposed in space being served			
Exhaust duct between dampers and louvres			C-1
Acoustically lined ducts		Where identified	

END OF SECTION

PART 1 GENERAL

1.1 SUMMARY

.1 Section Includes:

.1 Thermal insulation for piping and piping accessories in commercial type applications.

1.2 REFERENCES

.1 American Society of Heating, Refrigeration and Air Conditioning Engineers (ASHRAE)

.1 ASHRAE Standard 90.1-10, Energy Standard for Buildings Except Low-Rise Residential Buildings (IESNA co-sponsored; ANSI approved; Continuous Maintenance Standard).

.2 American Society for Testing and Materials International (ASTM)

.1 ASTM B209M-07, Standard Specification for Aluminum and Aluminum Alloy Sheet and Plate Metric.

.2 ASTM C335-05, Standard Test Method for Steady State Heat Transfer Properties of Horizontal Pipe Insulation.

.3 ASTM C411-11, Standard Test Method for Hot-Surface Performance of High-Temperature Thermal Insulation.

.4 ASTM C449/C449M-00, Standard Specification for Mineral Fiber-Hydraulic-Setting Thermal Insulating and Finishing Cement.

.5 ASTM C533-11, Calcium Silicate Block and Pipe Thermal Insulation.

.6 ASTM C547-12, Mineral Fiber Pipe Insulation.

.7 ASTM C795-08 (2013), Standard Specification for Thermal Insulation for Use in Contact with Austenitic Stainless Steel.

.8 ASTM C921-10, Standard Practice for Determining the Properties of Jacketing Materials for Thermal Insulation.

.3 Canadian General Standards Board (CGSB)

.1 CGSB 51-GP-52Ma-89, Vapour Barrier, Jacket and Facing Material for Pipe,

Duct and Equipment Thermal Insulation.

.2 CAN/CGSB-51.53-95, Poly (Vinyl Chloride) Jacketting Sheet, for Insulated Pipes, Vessels and Round Ducts

.4 Department of Justice Canada (Jus)

.1 Canadian Environmental Assessment Act (CEAA), 1995, c.37.

.2 Canadian Environmental Protection Act (CEPA), 1999, c.33.

.3 Transportation of Dangerous Goods Act (TDGA), 1992, c. 34.

.5 Health Canada/Workplace Hazardous Materials Information System (WHMIS)

.1 Material Safety Data Sheets (MSDS).

.6 Manufacturer's Trade Associations

.1 Thermal Insulation Association of Canada (TIAC): National Insulation Standards (Revised 2004).

.7 Underwriters' Laboratories of Canada (ULC)

.1 CAN/ULC-S102-03, Surface Burning Characteristics of Building Materials and Assemblies.

.2 CAN/ULC-S701-01, Thermal Insulation, Polystyrene, Boards and Pipe Covering.

.3 CAN/ULC-S702-1997, Thermal Insulation, Mineral Fibre, for Buildings

.4 CAN/ULC-S702.2-03, Thermal Insulation, Mineral Fibre, for Buildings, Part 2: Application Guidelines.

1.3 DEFINITIONS

.1 For purposes of this section:

.1 "CONCEALED" - insulated mechanical services in suspended ceilings and non-accessible chases and furred-in spaces.

.2 "EXPOSED" - will mean "not concealed" as specified.

.2 TIAC ss:

.1 CRF: Code Rectangular Finish.

.2 CPF: Code Piping Finish.

1.4 SUBMITTALS

.1 Submittals: in accordance with Section 01 33 00 - Submittal Procedures.

.2 Product Data:

.1 Submit manufacturer's printed product literature, specifications and datasheet in accordance with Section 01 33 00 - Submittal Procedures. Include product characteristics, performance criteria, and limitations.

.1 Submit two copies of Workplace Hazardous Materials Information System (WHMIS) Material Safety Data Sheets (MSDS) in accordance with Section 01 33 00 - Submittal Procedures.

.3 Shop Drawings:

.1 Submit shop drawings in accordance with Section 01 33 00 - Submittal Procedures.

.4 Quality assurance submittals: submit following in accordance with Section 01 33 00 - Submittal Procedures.

.1 Certificates: submit certificates signed by manufacturer certifying that materials comply with specified performance characteristics and physical properties.

1.5 QUALITY ASSURANCE

.1 Qualifications:

.2 Installer: specialist in performing work of this Section, and have at least 3 years successful experience in this size and type of project, member of TIAC.

.3 Health and Safety:

.1 Do construction occupational health and safety in accordance with Section 01 70 12 - Safety Requirements.

1.6 DELIVERY, STORAGE AND HANDLING

.1 Packing, shipping, handling and unloading:

.1 Deliver, store and handle in accordance with manufacturer's written instructions and Section 01 61 00 - Common Product Requirements.

.2 Deliver, store and handle materials in

accordance with manufacturer's written instructions.

.3 Deliver materials to site in original factory packaging, labelled with manufacturer's name, address.

.2 Storage and Protection:

.1 Protect from weather, construction traffic.

.2 Protect against damage.

.3 Store at temperatures and conditions required by manufacturer.

.3 Waste Management and Disposal:

.1 Construction/Demolition Waste Management and Disposal: separate waste materials for reuse and recycling in accordance with Section 01 74 21 - Construction/Demolition Waste Management and Disposal.

.2 Place excess or unused insulation and insulation accessory materials in designated containers.

.3 Divert unused metal materials from landfill to approved metal recycling facility.

.4 Dispose of unused adhesive material at official approved hazardous material collections site.

PART 2 PRODUCTS

1.7 FIRE AND SMOKE RATING

.1 In accordance with CAN/ULC-S102.

.1 Maximum flame spread rating: 25.

.2 Maximum smoke developed rating: 50.

1.8 INSULATION

.1 Mineral fibre specified includes glass fibre, rock wool, slag wool.

.2 Thermal conductivity ("k" factor) not to exceed specified values at 24 degrees C mean temperature when tested in accordance with ASTM C335.

.3 TIAC Code A-1: rigid moulded mineral fibre without factory applied vapour retarder

jacket.

.1 Mineral fibre: to CAN/ULC-S702, ASTM C547.

.2 Maximum "k" factor: to CAN/ULC-S702.

.4 TIAC Code A-3: rigid moulded mineral fibre with factory applied vapour retarder jacket.

.1 Mineral fibre: to CAN/ULC-S702, ASTM C547.

.2 Jacket: to CGSB 51-GP-52Ma.

.3 Maximum "k" factor: to CAN/ULC-S702, ASTM C547.

.5 TIAC Code C-2: mineral fibre blanket faced with factory applied vapour retarder jacket (as scheduled in PART 3 of this section).

.1 Mineral fibre: to CAN/ULC-S702, ASTM C547.

.2 Jacket: to CGSB 51-GP-52Ma.

.3 Maximum "k" factor: to CAN/ULC-S702, ASTM C547.

1.9 INSULATION SECUREMENT

.1 Tape: self-adhesive, aluminum, reinforced, 50 mm wide minimum.

.2 Contact adhesive: quick setting.

.3 Canvas adhesive: washable.

.4 Tie wire: 1.5 mm diameter stainless steel.

.5 Bands: stainless steel, 19 mm wide, 0.5 mm thick.

1.10 CEMENT

.1 Thermal insulating and finishing cement:

.1 Hydraulic setting on mineral wool, to ASTM C449/C449M.

1.11 VAPOUR RETARDER LAP ADHESIVE

.1 Water based, fire retardant type, compatible with insulation.

1.12 INDOOR VAPOUR RETARDER FINISH

.1 Vinyl emulsion type acrylic, compatible with insulation.

1.13 OUTDOOR

.1 Vinyl emulsion type acrylic, compatible with

VAPOUR RETARDER FINISH

insulation.

.2 Reinforcing fabric: fibrous glass, untreated 305 g/m^2.

1.14 JACKETS

.1 Polyvinyl Chloride (PVC):

.1 One-piece moulded type and sheet to CAN/CGSB-51.53 with pre-formed shapes as required.

.2 Colours: White.

.3 Minimum service temperatures: -20°C.

.4 Maximum service temperature: 65° C.

.5 Moisture vapour transmission: 0.02 perm.

.6 Fastenings:

.1 Use solvent weld adhesive compatible with insulation to seal laps and joints.

.2 Tacks.

.3 Pressure sensitive vinyl tape of matching colour.

.7 Special requirements:

.1 Outdoor: UV rated material at least 0.5 mm thick.

.2 Canvas:

.1 220 gm/m^2 cotton, plain weave, treated with dilute fire retardant lagging adhesive to ASTM C921.

.2 Lagging adhesive: compatible with insulation.

PART 3 EXECUTION

1.15 MANUFACTURER 'S INSTRUCTIONS

.1 Compliance: comply with manufacturer's written recommendations or specifications, including product technical bulletins, handling, storage and installation instructions, and datasheet.

1.16 PRE-INSTALLATION REQUIREMENT

.1 Pressure testing of piping systems and adjacent equipment to be complete, witnessed and certified.

.2 Surfaces clean, dry, free from foreign

material.

1.17 INSTALLATION

.1 Install in accordance with TIAC National Standards.

.2 Apply materials in accordance with manufacturers instructions and this specification.

.3 Use two layers with staggered joints when required nominal wall thickness exceeds 75 mm.

.4 Maintain uninterrupted continuity and integrity of vapour retarder jacket and finishes.

.1 Install hangers, supports outside vapour retarder jacket.

.5 Supports, Hangers:

.1 Apply high compressive strength insulation, suitable for service, at oversized saddles and shoes where insulation saddles have not been provided.

1.18 PIPING INSULATION SCHEDULES

.1 Includes valves, valve bonnets, strainers, flanges and fittings unless otherwise specified.

.2 TIAC Code: A-1.

.1 Securements: SS bands 19mm at 300 mm on centre.

.2 Seals: lap seal adhesive, lagging adhesive.

.3 Installation: TIAC Code 1501-H.

.3 TIAC Code: A-3.

.1 Securements: SS wire, bands, Tape at 300 mm on centre.

.2 Seals: VR lap seal adhesive, VR lagging adhesive.

.3 Installation: TIAC Code: 1501-C.

.4 TIAC Code: A-6.

.1 Seals: lap seal adhesive, lagging adhesive.

.5 TIAC Code: C-2 with vapour retarder jacket.

.1 Seals: lap seal adhesive, lagging adhesive.

.2 Installation: TIAC Code: 1501-C.

.6 TIAC Code: A-2.

.1 Seals: lap seal adhesive, lagging adhesive.

.2 Installation: TIAC Code: 1501-H.

.7 Thickness of insulation as listed in following table.

.1 Run-outs to individual units and equipment not exceeding 4000 mm long.

.2 Do not insulate exposed runouts to plumbing fixtures, chrome plated piping, valves, fittings.

Applica-tion	Temp degrees C		TIAC code	Pipe	
Run out	to 1	1 1/4 to 2	2 1/2 to 45	to	
Hot Water Heating	H.T. Loop		A-1	25	38
Hot Water Heating	R.F. Loops		A-1	25	25
Domestic HWS	A-1	25	25	25	38
Domestic CWS, and NPW			A-3	25	25
RWL and RWP (to Floor)			C-2	25	25

.8 Finishes:

.1 Exposed indoors: PVC.

.2 Exposed in mechanical rooms: PVC.

.3 Concealed, indoors: canvas on valves, fittings. No further finish.

.4 Use vapour retarder jacket on TIAC code A-3 insulation compatible with insulation

.5 Finish attachments: SS bands at 150 mm on centre.

.6 Installation: to appropriate TIAC code CRF/1 through CPF/5.

1.19 FIELD QUALITY CONTROL

.1 Contractor's Verification:

.1 Materials and resources.

.2 Storage and collection of recyclables.

.3 Construction waste management.

.4 Resource reuse.

.5 Recycled content.

.6 Local/regional materials.

.7 Certified wood.

.8 Low-emitting materials.

1.20 CLEANING

.1 Proceed in accordance with Section 01 74 11 - Cleaning.

.2 Upon completion and verification of performance of installation, remove surplus materials, excess materials, rubbish, tools and equipment.

END OF SECTION

PART 1 GENERAL

1.1 REFERENCES

.1 American National Standards Institute (ANSI)/American Welding Society (AWS)

.1 ANSI/AWS A5.8/A5.8M-11, AMD1 Specification Filler Metals for Brazing and Braze Welding.

.2 ASME

.1 ANSI/ASME B16.4-06, Gray-Iron Threaded Fittings Classes 125 and 250.

.2 ANSI/ASME B16.15-11, Cast Copper Alloy Threaded Fittings Classes 125 and 250.

.3 ANSI B16.18-12, Cast Copper Alloy, Solder Joint Pressure Fittings.

.4 ANSI/ASME B16.22-12, Wrought Copper and Copper-Alloy Solder Joint Pressure Fittings.

.3 ASTM International

.1 ASTM B32-08, Standard Specification for Solder Metal.

.2 ASTM B61-08, Standard Specification for Steam or Valve Bronze Castings.

.3 ASTM B62-09, Standard Specification for Composition Bronze or Ounce Metal Castings.

.4 ASTM B88M-05(2011), Standard Specification for Seamless Copper Water Tube (Metric).

.5 ASTM E202-12, Standard Test Methods for Analysis of Ethylene Glycols and Propylene Glycols.

.4 Health Canada/Workplace Hazardous Materials Information System (WHMIS)

.1 Material Safety Data Sheets (MSDS).

.5 Manufacturers Standardization Society (MSS)

.1 MSS SP67-2011, Butterfly Valves.

.2 MSS SP70-201], Cast Iron Gate Valves, Flanged and Threaded Ends.

.3 MSS SP71-2011, Grey Iron Swing Check Valves, Flanged and Threaded Ends.

.4 MSS SP80-2008, Bronze Gate, Globe, Angle

and Check Valves.

.5 MSS SP85-2011, Cast Iron Globe and Angle Valves, Flanged and Threaded Ends.

1.2 ACTION AND INFORMATIONAL SUBMITTALS

.1 Submit in accordance with Section 01 33 00 - Submittal Procedures.

.2 Product Data:

.1 Submit manufacturer's instructions, printed product literature and data sheets for hydronic systems and include product characteristics, performance criteria, physical size, finish and limitations.

.2 Submit 2 copies of WHMIS MSDS in accordance with Section 01 70 12 - Safety Requirements.

.3 Shop Drawings:

.1 Submit drawings stamped and signed by professional engineer registered or licensed in Province of Ontario, Canada.

.2 Indicate on manufacturers catalogue literature the following: valves.

.4 Certificates: submit certificates signed by manufacturer certifying that materials comply with specified performance characteristics and physical properties.

1.3 CLOSEOUT SUBMITTALS

.1 Submit in accordance with Section 01 78 00 - Closeout Submittals.

.2 Operation and Maintenance Data: submit operation and maintenance data for hydronic systems for incorporation into manual.

.3 Submit 3 copies of operation and maintenance manual.

1.4 MAINTENANCE MATERIALS SUBMITTALS

.1 Extra Materials:

.1 Furnish following spare parts:

.1 Valve seats: one for every ten valves, each size. Minimum one.

.2 Discs: one for every ten valves, each size. Minimum one.

.3 Stem packing: one for every ten

valves, each size. Minimum one.

.4 Valve handles: two of each size.

.5 Gaskets for flanges: one for every ten flanges.

1.5 QUALITY ASSURANCE

.1 Regulatory Requirements: ensure Work is performed in compliance with CEPA, CEAA, TDGA, applicable Provincial regulations.

1.6 DELIVERY, STORAGE AND HANDLING

.1 Deliver, store and handle materials in accordance with Section with manufacturer's written instructions.

.2 Delivery and Acceptance Requirements: deliver materials to site in original factory packaging, labelled with manufacturer's name and address.

.3 Storage and Handling Requirements:

.1 Store materials off ground, indoors, in dry location and in accordance with manufacturer's recommendations in clean, dry, well-ventilated area.

.2 Store and protect hydronic systems from nicks, scratches, and blemishes.

.3 Replace defective or damaged materials with new.

.4 Packaging Waste Management: remove for reuse packaging materials as specified in Construction Waste Management Plan in accordance with Section 01 74 21 - Construction/Demolition Waste Management and Disposal.

PART 2 PRODUCTS

1.7 TUBING

.1 Type L copper tubing: to ASTM B88 Standard.

1.8 FITTINGS

.1 Cast bronze threaded fittings: to ANSI/ASME B16.15.

.2 Cast bronze pressure solder fittings: to ANSI B16.18.

.3 Wrought copper and copper alloy solder joint

pressure fittings: to ANSI/ASME B16.22.

.4 Cast iron threaded fittings: to ANSI/ASME B16.4.

.5 Cast copper alloy solder joint pressure fittings: to ANSI B16.18.

1.9 FLANGES

.1 Brass or bronze: threaded.

.2 Cast iron: threaded.

.3 Orifice flanges: slip-on, raised face, 2100 kPa.

1.10 JOINTS

.1 Solder, tin-antimony, 95:5: to ASTM B32.

.2 Silver solder BCUP: to ANSI/AWS A5.8.

.3 Brazing: as indicated.

1.11 VALVES

.1 Connections:

.1 NPS 2 and smaller: ends for soldering.

.2 NPS 2 1/2 and larger: grooved ends.

.2 Gate Valves: application: isolating equipment, control valves, pipelines:

.1 NPS 2 and under:

.1 Mechanical Rooms: Class 125, rising stem split wedge disc, as specified Section 23 05 23.01 - Valves - Bronze.

.2 Elsewhere: Class 125, non- rising stem, solid wedge disc, as specified Section 23 05 23.01 - Valves - Bronze.

.2 NPS 2 1/2 and over:

.1 Mechanical Rooms: rising stem, split wedge disc, bronze trim, as specified Section 23 05 23.02 - Valves - Cast Iron.

.2 Elsewhere: Non- rising stem, solid wedge disc, bronze trim, as specified Section 23 05 23.02 - Valves - Cast Iron.

.3 Butterfly valves: application: isolating each cell or section of multiple component

equipment (i.e. multi-section coils):

.1 NPS 2 1/2 and over: lug type grooved ends: as specified Section 23 05 17 - Pipe Welding.

.4 Globe valves: application: throttling, flow control, emergency bypass:

.1 NPS 2 and under:

.1 Mechanical Rooms: with PTFE disc, as specified Section 23 05 23.01 - Valves - Bronze.

.2 Elsewhere: globe, with composition disc, as specified Section 23 05 23.01 - Valves - Bronze.

.2 NPS 2 1/2 and over:

.1 With composition bronze disc, bronze trim, as specified Section 23 05 23.02 - Valves - Cast Iron.

.5 Balancing, for TAB:

.1 Sizes: calibrated balancing valves, as specified.

.2 NPS 2 and under:

.1 Mechanical rooms: globe, with plug disc as specified Section 23 05 23.01 - Valves - Bronze.

.2 Elsewhere: globe, with plug disc as specified Section 23 05 23.01 - Valves - Bronze.

.6 Drain valves: gate, Class 125 as 23 05 23.01 - Valves - Bronze.

.7 Bypass valves on gate globe valves NPS 8 and larger: NPS 3/4, globe, with PTFE disc as specified Section 23 05 23.01 - Valves - Bronze.

.8 Swing check valves:

.1 NPS 2 and under:

.1 Class 125, swing, with composition disc, as specified Section 23 05 23.01 - Valves - Bronze.

.2 NPS 2 1/2 and over:

.1 Flanged, Grooved ends: as specified Section 23 05 23.02 - Valves - Cast Iron.

.9 Ball valves:

.1 NPS 2 and under: as specified Section 23 05 23.01 - Valves - Bronze.

.10 Lubricated Plug Valves:

.1 NPS 2 and under: as specified Section 23 05 23 02 – Valves – Cast Iron.

.2 NPS 2 1/2 and over: as specified Section 23 05 23.02 - Valves - Cast Iron.

PART 3 EXECUTION

1.12 EXAMINATION

.1 Verification of Conditions: verify that conditions of substrate previously installed under other Sections or Contracts are acceptable for hydronic systems installation in accordance with manufacturer's written instructions.

.1 Visually inspect substrate in presence of Owner.

.2 Inform Owner of unacceptable conditions immediately upon discovery.

.3 Proceed with installation only after unacceptable conditions have been remedied and after receipt of written approval to proceed from Owner.

1.13 MANUFACTURER 'S INSTRUCTIONS

.1 Compliance: comply with manufacturer's written recommendations or specifications, including product technical bulletins, handling, storage and installation instructions, and datasheet.

1.14 PIPING INSTALLATION

.1 Connect to equipment in accordance with manufacturer's instruction unless otherwise indicated.

.2 The piping shown on the drawings is diagrammatic for clearness in indicating the general run and connections and may or may not be, in all instances, shown in its true position. Take responsibility for the proper erection of systems of piping in every respect suitable for the work intended and as

described herein.

.3 Keep plugged or capped all openings in pipe or fittings during installation.

.4 Install concealed pipes close to building structure to keep furring space to minimum. Install to conserve headroom and space. Run exposed piping parallel to walls. Group piping where ever practical.

.5 Slope piping in direction of drainage and for positive venting.

.6 Use eccentric reducers at pipe size change installed to provide positive drainage or positive venting.

.7 Provide clearance for installation of insulation and access for maintenance of equipment, valves and fittings.

.8 During welding or soldering procedures, provide a fire retardant cloth, mat or blanket to protect the structure, and adequate fire protection equipment at all locations where work is being done. Close off shaft or confined areas with a fire retardant mat or cloth to prevent sparks or pieces of hot metal from falling down the shaft or area way.

.9 Provide long turn pipe fittings having not less than pipe wall thickness. Provide line size tees. Where branch lines are more than two sizes smaller than the main, weldolets may be used.

.10 Where steel piping is required to be buried, apply two coats of primer to all buried surfaces after assembly and testing. Hot or cold applied tape selected for the application and applied to manufacturer’s instructions, is also acceptable.

.11 Assemble piping using fittings manufactured to ANSI standards.

1.15 VALVE INSTALLATION

.1 Install rising stem valves in upright position with stem above horizontal.

.2 Install gate, ball, butterfly valves at branch take-offs and to isolate each piece of

equipment, and as indicated.

.3 Install globe valves for balancing and in by-pass around control valves as indicated.

.4 Install swing check valves in horizontal lines on discharge of pumps and as indicated.

.5 Install chain operators on valves NPS 2 1/2 and over where installed more than 2400 mm above floor in Mechanical Equipment Rooms.

.6 Install plug cocks, ball valves for glycol service.

1.16 CIRCUIT BALANCING VALVES

.1 Install flow measuring stations and flow balancing valves as indicated.

.2 Remove handwheel after installation and TAB is complete.

.3 Tape joints in prefabricated insulation on valves installed in chilled water mains.

1.17 FLUSHING AND CLEANING

.1 Flush and clean in presence of Owner.

.2 Flush after pressure test for a minimum of 4 hours.

.3 Fill with solution of water and non-foaming, phosphate-free detergent 3% solution by weight. Circulate for minimum of 8 hours.

.4 Refill system with clean water. Circulate for at least 4 hours. Clean out strainer screens/baskets regularly. Then drain.

.5 Refill system with clean water. Circulate for at least 2 hours. Clean out strainer screens/baskets regularly. Then drain.

.6 Drainage to include drain valves, dirt pockets, strainers, low points in system.

.7 Re-install strainer screens/baskets only after obtaining Owner's approval.

1.18 FILLING OF SYSTEM

.1 Refill system with clean water adding water treatment as specified and glycol.

1.19 FIELD QUALITY CONTROL

.1 Testing:

.1 Test system in accordance with Section 21 05 01 - Common Work Results for Mechanical.

.2 For glycol systems retest after cleaning. Repair leaking joints, fittings or valves.

.2 Balancing:

.1 Balance water systems to within plus or minus 5% of design output.

.2 Refer to Section 23 05 93 for applicable procedures.

1.20 CLEANING

.1 Progress Cleaning: clean in accordance with Section 01 74 11 - Cleaning.

.1 Leave Work area clean at end of each day.

.2 Final Cleaning: upon completion remove surplus materials, rubbish, tools and equipment in accordance with Section 01 74 11 - Cleaning.

END OF SECTION

PART 1 GENERAL

1.1 SUMMARY

.1 Section Includes.

.1 Materials and installation for steel piping, valves and fittings for hydronic systems.

.2 Related Sections.

.1 Section 01 33 00 - Submittal Procedures.

.2 Section 01 74 21 - Construction/Demolition Waste Management And Disposal.

.3 Section 01 70 12 - Safety Requirements.

.4 Section 01 78 00 - Closeout Submittals.

.5 Section 21 05 01 - Common Work Results for Mechanical.

.6 Section 23 05 17 - Pipe Welding.

.7 Section 23 08 02 - Cleaning and Start-up of Mechanical Piping Systems.

.8 Section 23 05 05 - Installation of Pipework.

.9 Section 23 05 23.01 - Valves - Bronze.

.10 Section 23 05 23.02 - Valves - Cast Iron.

.11 Section 23 05 93 - Testing, Adjusting and Balancing for HVAC.

.12 Section 23 08 01 - Performance Verification of Mechanical Piping.

1.2 REFERENCES

.1 American Society of Mechanical Engineers (ASME).

.1 ASME B16.1-98, Cast Iron Pipe Flanges and Flanged Fittings.

.2 ASME B16.3-98, Malleable Iron Threaded Fittings.

.3 ASME B16.5-03, Pipe Flanges and Flanged Fittings.

.4 ASME B16.9-01, Factory-Made

Wrought Buttwelding Fittings.

.5 ASME B18.2.1-03, Square and Hex Bolts and Screws (Inch Series).

.6 ASME B18.2.2-87 (R1999), Square and Hex Nuts (Inch Series).

.2 American Society for Testing and Materials International, (ASTM).

.1 ASTM A47/A47M-99, Standard Specification for Ferritic Malleable Iron Castings.

.2 ASTM A53/A53M-02, Standard Specification for Pipe, Steel, Black and Hot-Dipped, Zinc Coated Welded and Seamless.

.3 ASTM A536-84 (1999) e1, Standard Specification for Ductile Iron Castings.

.4 ASTM B61-02, Standard Specification for Steam or Valve Bronze Castings.

.5 ASTM B62-02, Standard Specification for Composition Bronze or Ounce Metal Castings.

.6 ASTM E202-00, Standard Test Method for Analysis of Ethylene Glycols and Propylene Glycols.

.3 American Water Works Association (AWWA).

.1 AWWA C111-00, Rubber-Gasket Joints for Ductile-Iron Pressure Pipe and Fittings.

.4 Canadian Standards Association (CSA International).

.1 CSA B242-M1980 (R1998), Groove and Shoulder Type Mechanical Pipe Couplings.

.2 CAN/CSA W48-01, Filler Metals and Allied Materials for Metal Arc Welding (Developed in cooperation with the Canadian Welding Bureau).

.5 Manufacturer's Standardization of the Valve and Fittings Industry (MSS).

.1 MSS-SP-67-025, Butterfly Valves.

.2 MSS-SP-70-98, Cast Iron Gate

Valves, Flanged and Threaded Ends.

.3 MSS-SP-71-97, Cast Iron Swing Check Valves Flanged and Threaded Ends.

.4 MSS-SP-80-03, Bronze Gate, Globe, Angle and Check Valves.

.5 MSS-SP-85-02, Cast Iron Globe and Angle Valves, Flanged and Threaded Ends.

1.3 SUBMITTALS

.1 Submit shop drawings in accordance with Section 01 33 00 - Submittal Procedures.

.2 Closeout Submittals.

.1 Provide maintenance data for incorporation into manual specified in Section 01 78 00 - Closeout Submittals and include following:

.2 Contractor to submit grooved product submittals, Grooved product to be of one manufacture, and must have current CRN #’s

.3 Grooved product Manufacture to supply on site tool and products installation training.

1.4 QUALITY ASSURANCE

.1 Health and Safety.

.1 Do construction occupational health and safety in accordance with Section 01 70 12 - Safety Requirements.

1.5 DELIVERY, STORAGE AND HANDLING

.1 Waste Management and Disposal.

.1 Separate waste materials for reuse and recycling in accordance with Section 01 74 21 - Construction/Demolition Waste Management And Disposal.

.2 Remove from site and dispose of packaging materials at appropriate recycling facilities.

.3 Collect and separate for disposal paper, plastic, polystyrene, corrugated cardboard, packaging

material in appropriate on-site bins for recycling in accordance with Waste Management Plan.

.4 Fold up metal and plastic banding, flatten and place in designated area for recycling.

1.6 MAINTENANCE

.1 Extra Materials.

.1 Provide following spare parts:

.1 Valve seats: one for every ten valves, each size. Minimum one.

.2 Discs: one for every ten valves, each size. Minimum one.

.3 Stem packing: one for every ten valves, each size. Minimum one.

.4 Valve handles: two of each size.

.5 Gaskets for flanges: one for every ten flanges.

PART 2 PRODUCTS

1.7 PIPE

.1 Steel pipe: to ASTM A53/A53M, Grade B, as follows:

.1 To NPS8: Schedule 40, unless otherwise noted.

1.8 PIPE JOINTS

.1 NPS2 and under: screwed fittings with PTFE tape or lead-free pipe dope.

.2 NPS2-1/2 and over: welding fittings and flanges to CAN/CSA W48.

.3 Roll grooved: standard rigid coupling to CSA B242.

.1 Roll grooved: standard, rigid coupling to CSA B242.

.2 Flexible Couplings to CSA B242 to be used where noted on Engineers drawings.

.4 Flanges: raised face, weld neck to AWWA C111.

.5 Orifice flanges: slip-on raised face, 2100 kPa.

.6 Flange gaskets: to AWWA C111.

.7 Pipe thread: taper.

.8 Bolts and nuts: to ASME B18.2.1 and ASME B18.2.2.

Roll grooved coupling gaskets: type EPDM. (-30°C To + 110°C for continuous operation). Acceptable on Hot Water in all areas.

1.9 FITTINGS

.1 Screwed fittings: malleable iron, to ASME B16.3, Class 150.

.2 Pipe flanges and flanged fittings:

.1 Cast iron: to ASME B16.1, Class 125.

.2 Steel: to ASME B16.5.

.3 Butt-welding fittings: steel, to ASME B16.9.

.4 Unions: malleable iron, to ASTM A47/A47M and ASME B16.3.

.5 Fittings for roll grooved piping: malleable iron to ASTM A47/A47M. Victaulic Grooved Fittings

1.10 VALVES

.1 Connections:

.1 NPS2 and smaller: screwed ends.

.2 NPS2.1/2 and larger: Flanged ends.

.2 Gate valves: to MSS-SP-80 Application: Isolating equipment, control valves, pipelines:

.1 NPS2 and under:

.1 Mechanical Rooms: Class 125, rising stem, wedge disc, as specified Section 23 05 23.01 - Valves - Bronze.

.2 Elsewhere: Class 125, non-rising stem, solid wedge disc, as specified Section 23 05 23.01 - Valves - Bronze.

.2 NPS21/2 and over:

.1 Mechanical Rooms: rising stem, wedge disc, lead free bronze trim,

as specified Section 23 05 23.02 - Valves - Cast Iron: Gate, Globe, Check.

.2 Elsewhere: Non-rising stem, solid wedge disc, lead free bronze trim, as specified Section 23 05 23.02 - Valves - Cast Iron: Gate, Globe, Check.

.3 Butterfly valves: to MSS-SP-67 Application: Isolating cells or section of multiple component equipment (eg. multi-section coils, multi-cell cooling towers):

.1 NPS21/2 and over: Lug type or Grooved ends.

.2 Grooved End: Victaulic / Vic 300 Master Seal Butterfly Valves.

.4 Globe valves: to MSS-SP-80 Application: Throttling, flow control, emergency bypass.

.1 NPS2 and under:

.1 Mechanical Rooms: with PTFE disc, as specified Section 23 05 23.01 - Valves - Bronze.

.2 Elsewhere: Globe, with composition disc, as specified Section 23 05 23.01 - Valves - Bronze.

.2 NPS21/2 and over:

.1 With composition bronze disc, lead free bronze trim, as specified Section 23 05 23.02 - Valves - Cast Iron: Gate, Globe, Check.

.5 Balancing, for TAB:

.1 Sizes: Calibrated balancing valves, as specified this section.

.2 NPS2 and under:

.1 Mechanical Rooms: Globe, with plug disc as specified Section 23 05 23.01 - Valves - Bronze. Tour & Anderson 787

.2 Elsewhere: Globe, with plug disc as specified Section 23 05 23.01 - Valves - Bronze.

.3 The Contractor may install in lieu of standard malleable iron or copper fittings, the following

component system: Victaulic Koil Kits.

.6 Drain valves: Gate, Class 125, non-rising stem, solid wedge disc, as specified Section 23 05 23.01 - Valves - Bronze.

.7 Swing check valves: to MSS-SP-71.

.1 NPS2 and under:

.1 Class 125, swing, with composition disc, as specified Section 23 05 23.01 - Valves - Bronze.

.2 NPS21/2 and over:

.1 Flanged or Grooved ends: as specified Section 23 05 23.02 - Valves - Cast Iron: Gate, Globe, Check. Victaulic # 712 Check Valve.

.8 Ball valves:

.1 NPS2 and under: as specified Section 23 05 23.01 - Valves - Bronze.

PART 3 EXECUTION

1.11 PIPING INSTALLATION

.1 Install pipework in accordance with Section 23 05 05 - Installation of Pipe Work.

1.12 CIRCUIT BALANCING VALVES

.1 Install flow measuring stations and flow balancing valves as indicated.

.2 Remove handwheel after installation and when TAB is complete.

1.13 CLEANING, FLUSHING AND START-UP

.1 In accordance with Section 23 08 02 - Cleaning and Start-Up of Mechanical Piping Systems.

1.14 TESTING

.1 Test system in accordance with Section 21 05 01 - Common Work Results for Mechanical.

1.15 PERFORMANCE

.1 In accordance with Section 23 08 01 -

VERIFICATION

Performance Verification of Mechanical Piping.

END OF SECTION

PART 1 GENERAL

1.1 SUMMARY

.1 Section Includes:

.1 The supply and installation of Hydronic Specialties Equipment.

.2 Related Sections:

.1 Section 01 33 00 - Submittal Procedures.

.2 Section 01 74 21 - Construction/Demolition Waste Management And Disposal.

.3 Section 01 70 12 - Safety Requirements.

.4 Section 01 78 00 - Closeout Submittals.

.5 Section 23 08 01 - Performance Verification of Mechanical Piping Systems.

1.2 REFERENCES

.1 American Society of Mechanical Engineers (ASME).

.1 ASME-04, Boiler and Pressure Vessel Code.

.2 American Society for Testing and Materials, (ASTM).

.1 ASTM A47/A47M-99, Specification for Ferritic Malleable Iron Castings.

.2 ASTM A278M-01, Specification for Gray Iron Castings for Pressure-Containing Parts for Temperatures up to 650 degrees F (345 degrees C).

.3 ASTM A516/A516M-96 (e1), Specification for Pressure Vessel Plates, Carbon Steel, for Moderate - and Lower - Temperature Service.

.4 ASTM A536-84 (1999) e1, Specification for Ductile Iron Castings.

.5 ASTM B62-93, Specification for Composition Bronze or Ounce Metal Castings.

.3 Canadian Standards Association (CSA International).

.1 CSA B51-03, Boiler, Pressure Vessel, and Pressure Piping Code.

1.3 SUBMITTALS

.1 Submittals in accordance with Section 01 30 00 - Submittal Procedures.

.2 Product Data: submit WHMIS MSDS - Material Safety Data Sheets in accordance with Section 02 62 00.01 - Hazardous Materials.

.1 Submit shop drawings and product data in accordance with Section 01 33 00 - Submittal Procedures.

.2 Indicate on product data expansion tanks, air vents, separators, valves, strainers.

.3 Closeout Submittals:

.1 Submit maintenance data in accordance with Section 01 78 00 - Closeout Submittals.

1.4 QUALITY ASSURANCE

.1 Health and Safety:

.1 Do construction occupational health and safety in accordance with Section 01 35 29.06 - Health and Safety Requirements.

1.5 DELIVERY STORAGE AND DISPOSAL

.1 Waste Management and Disposal:

.1 Separate waste materials for reuse and recycling in accordance with Section 01 74 19 - Construction/Demolition Waste Management And Disposal.

.2 Collect and separate for disposal paper, plastic, polystyrene, corrugated cardboard, packaging material in appropriate on-site bins for recycling in accordance with Waste Management Plan.

PART 2 PRODUCTS

1.6 MATERIAL

1.7 AUTOMATIC AIR VENT

.1 Standard float vent: brass body and NPS 1/8 connection and rated at 690 kPa working pressure.

PART 3 EXECUTION

1.8 GENERAL

.1 Install as indicated and to manufacturer's recommendations.

.2 Run drain lines and blow off connections to terminate above nearest drain.

.3 Maintain proper clearance to permit service and maintenance.

.4 Should deviations beyond allowable clearances arise, request and follow Engineer's directive.

.5 Check shop drawings for conformance of all tappings for ancillaries and for equipment operating weights.

1.9 AIR VENTS

.1 Install at high points of systems.

.2 Install gate valve on automatic air vent inlet. Run discharge to nearest drain or service sink.

1.10 VERIFICATION

.1 Verification requirements in accordance with Section 01 47 17 - Sustainable Requirements: Contractor's Verification, include:

1.11 PERFORMANCE VERIFICATION

.1 In accordance with Section 23 08 01 - Performance Verification of Mechanical Piping Systems, supplemented as specified herein.

END OF SECTION

PART 1 GENERAL

1.1 SUMMARY

.1 Section Includes:

.1 Materials and installation of low-pressure metallic ductwork, joints and accessories.

.2 Related Sections:

.1 Section 01 33 00 - Submittal Procedures.

.2 Section 01 70 12 - Safety Requirements.

.3 Section 01 74 21 - Construction/Demolition Waste Management and Disposal.

.4 Section 07 84 00 - Firestopping.

.5 Section 23 05 29 - Hangers and Supports for HVAC Piping and Equipment.

.6 Section 23 05 94 - Pressure Testing of Ducted Air Systems.

1.2 REFERENCES

.1 American Society of Heating, Refrigerating and Air-Conditioning Engineers, Inc. (ASHRAE).

.2 American Society for Testing and Materials International, (ASTM).

.1 ASTM A480/A480M-03c, Standard Specification for General Requirements for Flat-Rolled Stainless and Heat-Resisting Steel Plate, Sheet and Strip.

.2 ASTM A635/A635M-02, Standard Specification for Steel, Sheet and Strip, Heavy-Thickness Coils, Carbon, Hot Rolled.

.3 ASTM A653/A653M-03, Standard Specification for Steel Sheet, Zinc Coated (Galvanized) or Zinc-Iron Alloy Coated (Galvannealed) by the Hot-Dip Process.

.3 Department of Justice Canada (Jus).

.1 Canadian Environmental Protection Act (CEPA), 1999, c. 33 .

.4 Health Canada/Workplace Hazardous Materials

Information System (WHMIS).

.1 Material Safety Data Sheets (MSDS).

.5 National Fire Protection Association (NFPA).

.1 NFPA 90A-[02], Standard for the Installation of Air-Conditioning and Ventilating Systems.

.2 NFPA 90B-02, Standard for the Installation of Warm Air Heating and Air-Conditioning Systems.

.6 Sheet Metal and Air Conditioning Contractors' National Association (SMACNA).

.1 SMACNA HVAC Duct Construction Standards - Metal and Flexible, 2nd Edition 1995 and Addendum No. 1, 1997.

.2 SMACNA HVAC Air Duct Leakage Test Manual, 1985, 1st Edition.

.3 IAQ Guideline for Occupied Buildings Under Construction 1995, 1st Edition.

.7 Transport Canada (TC).

.1 Transportation of Dangerous Goods Act (TDGA), 1992, c. 34.

1.3 SUBMITTALS

.1 Submit shop drawings and product data in accordance with Section 01 33 00 - Submittal Procedures.

.2 Product Data: submit WHMIS MSDS - Material Safety Data Sheets in accordance with Section 01 47 15 - Sustainable Requirements: Construction for the following:

.1 Sealants.

.2 Tape.

.3 Proprietary Joints.

1.4 QUALITY ASSURANCE

.1 Certification of Ratings:

.1 Catalogue or published ratings shall be those obtained from tests carried out by manufacturer or independent testing agency signifying adherence to codes and standards.

.2 Health and Safety:

.1 Do construction occupational health and

safety in accordance with Section 01 35 29.06 - Health and Safety Requirements.

.2 During construction meet or exceed the requirements of SMACNA IAQ Guideline for Occupied Buildings under Construction.

1.5 DELIVERY, STORAGE AND HANDLING

.1 Protect on site stored or installed absorptive material from moisture damage.

.2 Waste Management and Disposal:

.1 Separate waste materials for reuse and recycling in accordance with Section 01 47 21 - Construction/Demolition Waste Management and Disposal.

.2 Remove from site and dispose of packaging materials at appropriate recycling facilities.

.3 Collect and separate for disposal paper, plastic, polystyrene, corrugated cardboard, packaging material in appropriate on-site bins for recycling in accordance with Waste Management Plan.

.4 Separate for reuse and recycling and place in designated containers Steel, Metal, Plastic waste in accordance with Waste Management Plan.

.5 Place materials defined as hazardous or toxic in designated containers.

.6 Handle and dispose of hazardous materials in accordance with CEPA, TDGA, Regional and Municipal regulations.

.7 Fold up metal and plastic banding, flatten and place in designated area for recycling.

PART 2 PRODUCTS

1.6 SEAL CLASSIFICATION

.1 Classification as follows:

Maximum Pressure Pa	SMACNA Seal Class
500	A – All HVAC supply and return duct unless
250	B – All exhaust Ducts

.2 Seal classification:

.1 Class A: longitudinal seams, transverse joints, duct wall penetrations and connections made airtight with sealant and tape.

.2 Class B: longitudinal seams, transverse joints and connections made airtight with sealant, tape or combination thereof.

1.7 SEALANT

.1 Sealant: oil resistant, polymer type flame resistant duct sealant. Temperature range of minus 30°C to plus 93°C.

1.8 TAPE

.1 Tape: polyvinyl treated, open weave fiberglass tape, 50 mm wide.

1.9 DUCT LEAKAGE

.1 In accordance with SMACNA HVAC Air Duct Leakage Test Manual.

.2 Work (by TAB Agent) described 23 05 94.

1.10 FITTINGS

.1 Fabrication: to SMACNA.

.2 Radiused elbows.

.1 Rectangular: standard radius Centreline radius: 1.5 times width of duct.

.2 Round: five piece. Centreline radius: 1.5 times diameter.

.3 Branches:

.1 Rectangular main and branch: with radius on branch 1.5 times width of duct 45° entry on branch.

.2 Round main and branch: enter main duct at 45° with concentric conical connection.

.3 Provide volume control damper in branch duct near connection to main duct unless otherwise noted.

.4 Main duct branches: with splitter damper.

.4 Transitions:

.1 Diverging: 20 degrees maximum included angle.

.2 Converging: 30 degrees maximum included angle.

.5 Offsets:

.1 Full radiused elbows.

1.11 FIRE STOPPING

.1 Retaining angles around duct, on both sides of fire separation in accordance with Section 07 84 00 - Firestopping.

.2 Fire stopping material and installation must not distort duct.

1.12 GALVANIZED STEEL

.1 Lock forming quality: to ASTM A653/A653M, Z90 zinc coating.

.2 Thickness, fabrication and reinforcement: to SMACNA.

.3 Joints: to SMACNA proprietary manufactured duct joint.

.4 Round Duct: Spiral wound locked seam; made for high static ventilation system.

1.13 STAINLESS STEEL

.1 To ASTM A480/A480M, Type 304.

.2 Finish: No. 4.

.3 Thickness, fabrication and reinforcement: to SMACNA.

.4 Joints: to SMACNA be continuous inert gas welded.

1.14 HANGERS AND SUPPORTS

.1 Hangers and Supports: Refer to 23 05 29 for General Requirements.

.1 Strap hangers: of same material as duct but next sheet metal thickness heavier than duct.

.1 Maximum size duct supported by strap hanger: 500 round or single side.

.2 Hanger configuration: to ASHRAE and SMACNA.

.3 Hangers: galvanized steel angle with galvanized steel rods to following table:

Duct Size (mm)	Angle Size (mm)	Rod Size (mm)
up to 750	25 x 25 x 3	6
751 to 1050	40 x 40 x 3	6
1051 to 1500	40 x 40 x 3	10
1501 to 2100	50 x 50 x 3	10
2101 to 2400	50 x 50 x 5	10
2401 and over	50 x 50 x 6	10

.4 Upper hanger attachments:

.1 For concrete: manufactured concrete inserts.

.2 For steel joist: manufactured joist clamp.

.3 For steel beams: manufactured beam clamps:

PART 3 EXECUTION

1.15 GENERAL

.1 Do work in accordance with NFPA 90A, NFPA 90B, ASHRAE, SMACNA as indicated.

.2 Do not break continuity of insulation vapour barrier with hangers or rods.

.1 Insulate strap hangers 100 mm beyond insulated duct. Ensure diffuser is fully seated.

.3 Support risers in accordance with ASHRAE, SMACNA.

.4 Install breakaway joints in ductwork on sides of fire separation.

.5 Install proprietary manufactured flanged duct joints in accordance with manufacturer's instructions.

.6 Manufacture duct in lengths and diameter to accommodate installation of acoustic duct lining.

1.16 HANGERS

.1 Strap hangers: install in accordance with SMACNA.

.2 Angle hangers: complete with locking nuts and washers.

.3 Hanger spacing: in accordance with ASHRAE,

SMACNA as follows:

Duct Size (mm)	Spacing (mm)
to 1500	3000
1501 and over	2500

1.17 SEALING AND TAPING

.1 Apply sealant to outside of joint to manufacturer's recommendations.

.2 Bed tape in sealant and recoat with minimum of one coat of sealant to manufacturers recommendations.

1.18 LEAKAGE TESTS

.1 Refer to Section 23 05 94 - Pressure Testing of Ducted Air Systems.

.2 In accordance with SMACNA HVAC Duct Leakage Test Manual.

.3 Do leakage tests in sections.

.4 Make trial leakage tests as instructed to demonstrate workmanship.

.5 Do not install additional ductwork until trial test has been passed.

.6 Complete test before performance insulation or concealment Work.

1.19 FIELD QUALITY CONTROL

.1 Contractor's Verification, include:

.1 Materials and resources.

.2 Storage and collection of recyclables.

.3 Construction waste management.

.4 Resource reuse.

.5 Recycled content.

.6 Local/regional materials.

.7 Low-emitting materials.

END OF SECTION

PART 1 GENERAL

1.1 SUMMARY

.1 Section Includes:

.1 Materials and installation for duct accessories including flexible connections, access doors, vanes and collars.

.2 Related Sections:

.1 Section 01 33 00 - Submittal Procedures.

.2 Section 01 70 12 - Safety Requirements.

.3 Section 01 45 00 - Quality Control..

.4 Section 01 74 21 - Construction/Demolition Waste Management and Disposal.

.5 Section 01 78 00 - Closeout Submittals.

1.2 REFERENCES

.1 Health Canada/Workplace Hazardous Materials Information System (WHMIS).

.1 Material Safety Data Sheets (MSDS).

.2 Sheet Metal and Air Conditioning Contractors' National Association (SMACNA).

.1 SMACNA - HVAC Duct Construction Standards - Metal and Flexible, 95.

1.3 SUBMITTALS

.1 Submittals in accordance with Section 01 33 00 - Submittal Procedures.

.2 Product Data:

.1 Submit manufacturer's printed product literature, specifications and data sheet. Indicate the following:

.1 Flexible connections.

.2 Duct access doors.

.3 Instrument test ports.

.3 Test Reports: submit certified test reports from approved independent testing laboratories indicating compliance with specifications for specified performance characteristics and physical properties.

.1 Certification of ratings: catalogue or published ratings to be those obtained

from tests carried out by manufacturer or independent testing agency signifying adherence to codes and standards.

.4 Certificates: submit certificates signed by manufacturer certifying that materials comply with specified performance characteristics and physical properties.

.5 Instructions: submit manufacturer's installation instructions.

.6 Manufacturer's Field Reports: manufacturer's field reports specified.

.7 Closeout submittals: submit maintenance and engineering data for incorporation into manual specified in Section 01 78 00 - Closeout Submittals.

PART 2 PRODUCTS

1.4 GENERAL

.1 Manufacture in accordance with SMACNA - HVAC Duct Construction Standards.

1.5 FLEXIBLE CONNECTIONS

.1 Frame: galvanized sheet metal frame 18 ga. with fabric clenched by means of double locked seams.

.2 Material:

.1 Fire resistant, self extinguishing, neoprene coated glass fabric, temperature rated at minus 40°C to plus 90°C, density of 1.3 kg/m^2.

1.6 ACCESS DOORS IN DUCTS

.1 Non-Insulated Ducts: sandwich construction of same material as duct, one sheet metal thickness heavier, minimum 0.6 mm thick complete with sheet metal angle frame.

.2 Insulated Ducts: sandwich construction of same material as duct, one sheet metal thickness heavier, minimum 0.6 mm thick complete with sheet metal angle frame and 25 mm thick rigid glass fibre insulation.

.3 Gaskets: neoprene or foam rubber.

.4 Hardware:

.1 Up to 300 x 300 mm: two sash locks complete with safety chain.

.2 301 to 450 mm: four sash locks complete with safety chain.

.3 451 to 1000 mm: piano hinge and minimum two sash locks.

.4 Doors over 1000 mm: piano hinge and two handles operable from both sides.

.5 Hold open devices.

.6 300 x 300 mm glass viewing panels.

1.7 INSTRUMENT TEST

.1 1.6 mm thick steel zinc plated after manufacture.

.2 Cam lock handles with neoprene expansion plug and handle chain.

.3 28 mm minimum inside diameter. Length to suit insulation thickness.

.4 Neoprene mounting gasket.

1.8 TAKE-OFFS ON BRANCH DUCTS

.1 Prefabricated eccentric conical branch takeoff with flange to main duct.

.2 Spin-in collars not permitted.

PART 3 EXECUTION

3.1

.3 Compliance: comply with manufacturer's written recommendations or specifications, including product technical bulletins, handling, storage and installation instructions, and data sheet.

MANUFACTURER'S INSTRUCTIONS

1.9 INSTALLATION

.1 Flexible Connections:

.1 Install in following locations:

.1 Inlets and outlets to supply air units and fans.

.2 Inlets and outlets of exhaust and return air fans.

.3 As indicated.

.2 Length of connection: 100 mm.

.3 Minimum distance between metal parts

when system in operation: 75 mm.

.4 Install in accordance with recommendations of SMACNA.

.5 When fan is running:

.1 Ducting on sides of flexible connection to be in alignment.

.2 Ensure slack material in flexible connection.

.2 Access Doors and Viewing Panels:

.1 Size:

.1 600 x 600 mm for person size entry.

.2 300 x 300 mm for servicing entry, viewing.

.2 Locations:

.1 Fire dampers (both sides).

.2 Control dampers (both sides).

.3 Devices requiring maintenance.

.4 Reheat coils (both sides).

.5 Elsewhere as required by Engineer for inspections.

.6 All access as required for duct cleaning. Cooperate with duct cleaner and make duct cleaning complete.

.3 Instrument Test Ports:

.1 General:

.1 Install in accordance with recommendations of SMACNA and in accordance with manufacturer's instructions.

.2 Locate to permit easy manipulation of instruments.

.3 Install insulation port extensions as required.

.4 Locations:

.1 For traverse readings:

.1 Ducted inlets to roof and wall exhausters.

.2 Inlets and outlets of other fan systems.

.3 Main and sub-main ducts.

.4 And as indicated.

.2 For temperature readings:

.1 At outside air intakes.

.2 In mixed air applications in locations as approved by Engineer.

.3 At inlet and outlet of coils.

.4 Downstream of junctions of two converging air streams of different temperatures.

.5 And as indicated.

1.10 FIELD QUALITY CONTROL

.1 Manufacturer's Field Services:

.1 Have manufacturer of products, supplied under this Section, review Work involved in the handling, installation/application, protection and cleaning, of its products and submit written reports, in acceptable format, to verify compliance of Work with Contract.

.2 Manufacturer's Field Services: provide manufacturer's field services consisting of product use recommendations and periodic site visits for inspection of product installation in accordance with manufacturer's instructions.

.3 Schedule site visits, to review Work, at stages listed:

.1 After delivery and storage of products, and when preparatory Work, or other Work, on which the Work of this Section depends, is complete but before installation begins.

.2 Twice during progress of Work at 25% and 60% complete.

.3 Upon completion of the Work, after cleaning is carried out.

.2 Contractor's Verification, include:

.1 Materials and resources.

.2 Storage and collection of recyclables.

.3 Construction waste management.

.4 Resource reuse.

.5 Recycled content.

.6 Local/regional materials.

.7 Certified Wood.

.8 Low-emitting materials.

1.11 CLEANING

.1 Perform cleaning operations as specified and in accordance with manufacturer's recommendations.

.2 Upon completion and verification of performance of installation, remove surplus materials, excess materials, rubbish, tools and equipment.

END OF SECTION

PART 1 GENERAL

1.1 RELATED REQUIREMENTS

.1 Section 21 05 01.

1.2 REFERENCES

.1 Sheet Metal and Air Conditioning National Association (SMACNA)

.1 SMACNA HVAC Duct Construction Standards, Metal and Flexible-2013.

1.3 ACTION AND INFORMATIONAL SUBMITTALS

.1 Submit in accordance with Section 01 33 00 - Submittal Procedures.

.2 Product Data:

.1 Submit manufacturer's instructions, printed product literature and data sheets for dampers and include product characteristics, performance criteria, physical size, finish and limitations.

1.4 CLOSEOUT SUBMITTALS

.1 Submit in accordance with Section 01 78 00 - Closeout Submittals.

.2 Operation and Maintenance Data: submit operation and maintenance data for dampers for incorporation into manual.

1.5 DELIVERY, STORAGE AND HANDLING

.1 Deliver, store and handle materials in accordance with Section 01 61 00 - Common Product Requirements and with manufacturer's written instructions.

.2 Delivery and Acceptance Requirements: deliver materials to site in original factory packaging, labelled with manufacturer's name and address.

.3 Storage and Handling Requirements:

.1 Store materials off ground, indoors, in dry location and in accordance with manufacturer's recommendations in clean, dry, well-ventilated area.

.2 Store and protect dampers from nicks, scratches, and blemishes.

.3 Replace defective or damaged materials with new.

PART 2 PRODUCTS

1.6 GENERAL

.1 Manufacture to SMACNA standards.

PART 3 EXECUTION

1.7 EXAMINATION

.1 Verification of Conditions: verify that conditions of substrate previously installed under other Sections or Contracts are acceptable for damper installation in accordance with manufacturer's written instructions.

.1 Visually inspect substrate in presence of Owner.

.2 Inform Owner of unacceptable conditions immediately upon discovery.

.3 Proceed with installation only after unacceptable conditions have been remedied and after receipt of written approval to proceed from Owner.

1.8 INSTALLATION

.1 Install where indicated.

.2 Install in accordance with recommendations of SMACNA and in accordance with manufacturer's instructions.

.3 Locate balancing dampers in each branch duct, for supply, return and exhaust systems.

.4 Runouts to registers and diffusers: install single blade damper located as close as possible to main ducts.

.5 Dampers: vibration free.

.6 Ensure damper operators are observable and accessible.

.7 Corrections and adjustments conducted by Owner.

1.9 CLEANING

.1 Progress Cleaning: clean in accordance with Section 01 74 11 - Cleaning.

.1 Leave Work area clean at end of each

day.

.2 Final Cleaning: upon completion remove surplus materials, rubbish, tools and equipment in accordance with Section 01 74 11 - Cleaning.

END OF SECTION

PART 1 GENERAL

1.1 RELATED REQUIREMENTS

.1 Section 21 05 01.

1.2 REFERENCES

.1 ASTM International

.1 ASTM A653/A653M-11, Standard Specification for Steel Sheet, Zinc-Coated (Galvanized) or Zinc-Iron Alloy-Coated (Galvannealed) by Hot-Dip Process.

1.3 ACTION AND INFORMATIONAL SUBMITTALS

.1 Submit in accordance with Section 01 33 00 - Submittal Procedures.

.2 Product Data:

.1 Submit manufacturer's instructions, printed product literature and data sheets for dampers and include product characteristics, performance criteria, physical size, finish and limitations.

1.4 CLOSEOUT SUBMITTALS

.1 Submit in accordance with Section 01 78 00 - Closeout Submittals.

.2 Operation and Maintenance Data: submit operation and maintenance data for dampers for incorporation into manual.

1.5 DELIVERY, STORAGE AND HANDLING

.1 Deliver, store and handle materials in accordance with Section 01 61 00 - Common Product Requirements and with manufacturer's written instructions.

.2 Delivery and Acceptance Requirements: deliver materials to site in original factory packaging, labelled with manufacturer's name and address.

.3 Storage and Handling Requirements:

.1 Store materials off ground, indoors, in dry location and in accordance with manufacturer's recommendations in clean, dry, well-ventilated area.

.2 Store and protect dampers from nicks, scratches, and blemishes.

.3 Replace defective or damaged materials with new.

PART 2 PRODUCTS

1.6 MOTORIZED DAMPERS

.1 Parallel blade type as indicated.

.2 Extruded aluminum, interlocking blades, complete with extruded vinyl seals, spring stainless steel side seals, 12 ga. extruded aluminum frame.

.3 Celcon and polycarbonate bearings with no metal to metal contact.

.4 Linkage: Out of airstream aluminium alloy linkages and crank arms with celcon bearings.

.5 Performance:

.1 Leakage: 1% at 1 kPa static pressure differential across damper.

.6 Insulated aluminum dampers:

.1 Frames: insulated with extruded polystyrene foam with RSI 0.88.

.2 Blades: constructed from aluminum extrusions with internal hollows insulated with polyurethane or polystyrene foam, RSI 0.88.

PART 3 EXECUTION

1.7 EXAMINATION

.1 Verification of Conditions: verify that conditions of substrate previously installed under other Sections or Contracts are acceptable for damper installation in accordance with manufacturer's written instructions.

.1 Visually inspect substrate in presence of Owner.

.2 Inform Owner of unacceptable conditions immediately upon discovery.

.3 Proceed with installation only after unacceptable conditions have been remedied and after receipt of written approval to proceed from Owner.

1.8 INSTALLATION

.1 Install where indicated.

.2 Install in accordance with recommendations of SMACNA and manufacturer's instructions.

.3 Seal multiple damper modules with silicon sealant.

.4 Install access door adjacent to each damper. See Section 23 33 00 - Air Duct Accessories.

.5 Ensure dampers are observable and accessible.

1.9 CLEANING

.1 Progress Cleaning: clean in accordance with Section 01 74 11 - Cleaning.

.1 Leave Work area clean at end of each day.

.2 Final Cleaning: upon completion remove surplus materials, rubbish, tools and equipment in accordance with Section 01 74 11 - Cleaning.

END OF SECTION

PART 1 GENERAL

1.1 RELATED REQUIREMENTS

.1 Section 21 05 01.

1.2 REFERENCES

.1 National Fire Protection Association (NFPA)

.1 NFPA 90A-12, Standard for the Installation of Air Conditioning and Ventilating Systems.

.2 NFPA 80-13, Standard for Fire Doors and Other Opening Protectives.

.2 Underwriters Laboratories of Canada (ULC)

.1 CAN/ULC-S112-10, Standard Test Method of Fire Test of Fire Damper Assemblies.

.2 CAN/ULC-S112.2-07, Standard Method of Fire Test of Ceiling Fire Stop Flap Assemblies.

.3 ULC-S505-1974, Standard for Fusible Links for Fire Protection Service.

1.3 ACTION AND INFORMATIONAL SUBMITTALS

.1 Submit in accordance with Section 01 33 00 - Submittal Procedures.

.2 Product Data:

.1 Submit manufacturer's instructions, printed product literature and data sheets for fire and smoke dampers and include product characteristics, performance criteria, physical size, finish and limitations.

.2 Indicate the following:

.1 Fire dampers.

.2 Smoke dampers.

.3 Certificates: submit certificates signed by manufacturer certifying that materials comply with specified performance characteristics and physical properties.

1.4 CLOSEOUT SUBMITTALS

.1 Submit in accordance with Section 01 78 00 - Closeout Submittals.

.2 Operation and Maintenance Data: submit operation and maintenance data for fire and

smoke dampers for incorporation into manual.

1.5 MAINTENANCE MATERIAL SUBMITTALS

.1 Extra Materials:

.1 Submit maintenance materials in accordance with Section 01 78 00 - Closeout Submittals.

.2 Provide:

.1 6 fusible links of each type.

1.6 DELIVERY, STORAGE AND HANDLING

.1 Deliver, store and handle materials in accordance with Section 01 61 00 - Common Product Requirements and with manufacturer's written instructions.

.2 Delivery and Acceptance Requirements: deliver materials to site in original factory packaging, labelled with manufacturer's name and address.

.3 Storage and Handling Requirements:

.1 Store materials off ground, indoors, in dry location and in accordance with manufacturer's recommendations in clean, dry, well-ventilated area.

.2 Store and protect fire and smoke dampers from nicks, scratches, and blemishes.

.3 Replace defective or damaged materials with new.

PART 2 PRODUCTS

1.7 FIRE DAMPERS

.1 Fire dampers: arrangement Type B or C, bear label of ULC, meet requirements of authorities having jurisdiction, Fire Commissioner of Canada (CFFM) and NFPA 90A. Fire damper assemblies fire tested in accordance with NFPA 80 & CAN/ULC-S112.

.2 Mild steel, factory fabricated for fire rating requirement to maintain integrity of fire wall and/or fire separation.

.1 Fire dampers: 1-1/2 hour fire rating minimum and must match fire separation rating as indicated on architectural plans.

.2 Fire dampers: automatic operating type and have dynamic rating suitable for maximum air velocity and pressure differential to which it will be subjected.

.3 Top hinged: offset, round or square; multi-blade hinged, interlocking type; sized to maintain full duct cross section as indicated.

.4 Fusible link actuated, weighted to close and lock in closed position when released or having negator-spring-closing operator for multi-leaf type or roll door type in horizontal position with vertical air flow.

.5 40 x 40 x 3 mm retaining angle iron frame, on full perimeter of fire damper, on both sides of fire separation being pierced.

.6 Equip fire dampers with steel sleeve or frame installed disruption ductwork or impair damper operation.

.7 Equip sleeves or frames with perimeter mounting angles attached on both sides of wall or floor opening. Construct ductwork in fire-rated floor-ceiling or roof-ceiling assembly systems with air ducts that pierce ceiling to conform with ULC.

.8 Design and construct dampers to not reduce duct or air transfer opening cross-sectional area.

.9 Dampers shall be installed so that the centerline of the damper depth or thickness is located in the centerline of the wall, partition of floor slab depth or thickness.

.10 Unless otherwise indicated, the installation details given in SMACNA Install Fire Damp HVAC and in manufacturer's instructions for fire dampers shall be followed.

1.8 SMOKE DAMPERS

.1 Smoke Dampers: to be ULC listed and labelled.

.2 Normally closed reverse action smoke vent (S/D-RASV): folding blade type, opening by gravity upon detection of smoke, and/or as indicated. Two flexible stainless steel blade edge seals to provide required constant

sealing pressure.

.3 Normally open smoke/seal (S/D-SSSD): folding blade type, closing when actuated by means of electro thermal link and/or from remote alarm signalling device. Blade edge seals of flexible stainless steel to provide required constant sealing pressure. Provide stainless steel negator springs with locking devices to ensure positive closure for units mounted horizontally in vertical ducts.

.4 Motorized (S/D-M): folding blade type, normally open with power on. When power is interrupted damper shall close automatically. Both damper and damper operator shall be ULC listed and labelled.

.5 Electro thermal link (S/D-ETL): dual responsive fusible link which melts when subjected to local heat of 74 degrees C and from external electrical impulse of low power and short duration; ULC or UL listed and labelled.

PART 3 EXECUTION

1.9 EXAMINATION

.1 Verification of Conditions: verify that conditions of substrate previously installed under other Sections or Contracts are acceptable for fire and smoke damper installation in accordance with manufacturer's written instructions.

.1 Visually inspect substrate in presence of Owner.

.2 Inform Owner of unacceptable conditions immediately upon discovery.

.3 Proceed with installation only after unacceptable conditions have been remedied and after receipt of written approval to proceed from Owner.

.4 All fire dampers to tested in presence of and witnessed by DCC Rep.

1.10 INSTALLATION

.1 Install in accordance with NFPA 90A and in accordance with conditions of ULC listing.

.2 Maintain integrity of fire separation.

.3 After completion and prior to concealment obtain approvals of complete installation from authority having jurisdiction.

.4 Install access door adjacent to each damper. See Section 23 33 00 - Air Duct Accessories.

.5 Co-ordinate with installer of fire stopping.

.6 Ensure access doors/panels, fusible links, damper operators are easily observed and accessible.

.7 Install break-away joints of approved design on each side of fire separation.

1.11 CLEANING

.1 Progress Cleaning: clean in accordance with Section 01 74 11 - Cleaning.

.1 Leave Work area clean at end of each day.

.2 Final Cleaning: upon completion remove surplus materials, rubbish, tools and equipment in accordance with Section 01 74 11 - Cleaning.

END OF SECTION

PART 1 GENERAL

1.1 RELATED REQUIREMENTS

.1 Section 21 05 01.

.2 Section 23 07 13.

.3 Section 23 31 13 01.

1.2 REFERENCES

.1 American Society of Heating, Refrigerating and Air-Conditioning Engineers, Inc. (ASHRAE)

.2 National Fire Protection Association (NFPA)

.1 NFPA 90A-12, Standard for the Installation of Air-Conditioning and Ventilating Systems.

.2 NFPA 90B-12, Standard for Installation of Warm Air Heating and Air-Conditioning Systems.

.3 Sheet Metal and Air-Conditioning Contractors' National Association (SMACNA)

.1 SMACNA HVAC Duct Construction Standards - Metal and Flexible, 2005.

.2 SMACNA IAQ Guideline for Occupied Buildings under Construction, 2005.

.4 Underwriters' Laboratories (UL)

.1 UL 181-2005, Standard for Factory-Made Air Ducts and Air Connectors.

.5 Underwriters' Laboratories of Canada (ULC)

.1 CAN/ULC-S110-2007, Standard Methods of Tests for Air Ducts.

1.3 ACTION AND INFORMATIONAL SUBMITTALS

.1 Submit in accordance with Section 01 33 00 - Submittal Procedures.

.2 Product Data:

.1 Submit manufacturer's instructions, printed product literature and data sheets for flexible ducts and include product characteristics, performance criteria, physical size, finish and limitations.

.2 Indicate:

.1 Thermal properties.

.2 Friction loss.

.3 Acoustical loss.

.4 Leakage.

.5 Fire rating.

.3 Test and Evaluation Reports:

.1 Catalogue or published ratings to be those obtained from tests carried out by manufacturer or independent testing agency signifying adherence to codes and standards.

1.4 DELIVERY, STORAGE AND HANDLING

.1 Deliver, store and handle materials in accordance with Section 01 61 00 - Common Product Requirements and with manufacturer's written instructions.

.2 Delivery and Acceptance Requirements: deliver materials to site in original factory packaging, labelled with manufacturer's name and address.

.3 Storage and Handling Requirements:

.1 Store materials off ground, indoors, in dry location and in accordance with manufacturer's recommendations in clean, dry, well-ventilated area.

.2 Store and protect flexible ducts from nicks, scratches, and blemishes.

.3 Replace defective or damaged materials with new.

PART 2 PRODUCTS

1.5 GENERAL

.1 Factory fabricated to CAN/ULC-S110.

.2 Pressure drop coefficients listed below are based on relative sheet metal duct pressure drop coefficient of 1.00.

.3 Flame spread rating not to exceed 25. Smoke developed rating not to exceed 50.

1.6 METALLIC - UNINSULATED

.1 Type 1: spiral wound flexible aluminum, as indicated.

.2 Performance:

.1 Factory tested to 3.0 kPa without leakage.

.2 Maximum relative pressure drop coefficient: 3.

.3 Maximum length = 1500mm.

1.7 METALLIC - INSULATED

.1 Type 2: spiral wound flexible aluminum with factory applied, 37 mm thick flexible glass fibre thermal insulation with vapour barrier and reinforced mylar/neoprene laminate jacket, as indicated.

.2 Performance:

.1 Factory tested to 3.0 kPa without leakage.

.2 Maximum relative pressure drop coefficient: 3.

.3 Maximum length = 1500mm.

.4 Thermal loss/gain: 0.033 W/m^2. degrees C at 24 degrees C mean temperature.

PART 3 EXECUTION

1.8 EXAMINATION

.1 Verification of Conditions: verify that conditions of substrate previously installed under other Sections or Contracts are acceptable for flexible ducts installation in accordance with manufacturer's written instructions.

.1 Visually inspect substrate in presence of Owner.

.2 Inform Owner of unacceptable conditions immediately upon discovery.

.3 Proceed with installation only after unacceptable conditions have been remedied [and after receipt of written approval to proceed from Owner.

1.9 DUCT INSTALLATION

.1 Install in accordance with: CAN/ULC-S110, NFPA 90A, NFPA 90B, SMACNA.

1.10 CLEANING

.1 Progress Cleaning: clean in accordance with Section 01 74 11 - Cleaning.

.1 Leave Work area clean at end of each day.

.2 Final Cleaning: upon completion remove surplus materials, rubbish, tools and equipment in accordance with Section 01 74 11 - Cleaning.

END OF SECTION

PART 1 GENERAL

1.1 SECTION INCLUDES

.1 Materials and installation for acoustic duct lining.

1.2 RELATED SECTIONS

.1 Section 01 33 00 - Submittal Procedures.

.2 Section 01 70 12 - Safety Requirements.

1.3 REFERENCES

.1 American Society for Testing and Materials International, (ASTM).

.1 ASTM C423-02a, Standard Test Method for Sound Absorption and Sound Absorption Coefficients by the Reverberation Room Method.

.2 ASTM C916-85(2001)e1, Standard Specification for Adhesives for Duct Thermal Insulation.

.3 ASTM C1071-00, Standard specification for Fibrous Glass Duct Lining Insulation (Thermal and Sound Absorbing Material).

.4 ASTM C1338-00, Standard Test Method for Determining Fungi Resistance of Insulation Materials and Facings.

.5 ASTM G21-96(2002), Standard Practice for Determining Resistance of Synthetic Polymeric Materials to Fungi.

.2 Sheet Metal and Air Conditioning Contractor's National Association (SMACNA).

.1 SMACNA, HVAC DCS, HVAC, Duct Construction Standards, Metal and Flexible-95 (Addendum No.1, Nov. 97).

.2 SMACNA IAQ Guideline for Occupied Buildings 95.

.3 Underwriter's Laboratories of Canada (ULC).

.1 CAN/ULC-S102-03-EN, Methods of Test for Surface Burning Characteristics of Building Materials and Assemblies.

1.4 SUBMITTALS

.1 Submit product data in accordance with Section 01 33 00 - Submittal Procedures.

1.5 HEALTH AND SAFETY

.1 Do construction occupational health and safety in accordance with Section 01 70 12 - Safety Requirements.

1.6 DELIVERY, STORAGE AND HANDLING

.1 Protect on site stored or installed absorptive material from moisture damage.

1.7 WASTE MANAGEMENT AND DISPOSAL

.1 Remove from site and dispose of packaging materials at appropriate recycling facilities.

PART 2 PRODUCTS

1.8 DUCT LINER

.1 Rigid:

.1 Use on flat surfaces where indicated.

.2 25mm thick, to ASTM C1071, fiber free.

.3 Minimum NRC of 0.70 at 25 mm thickness based on Type A mounting to ASTM C423.

.4 Closed Cell.

1.9 FASTENINGS

.1 Tape: self adhesive, 100 mm wide, ULC labelled for less than 25 flame spread and less than 50 smoke developed.

.1 Contact adhesive: quick-setting.

.1 Armstrong 520,

.2 Foster 85-20 asbestos free, 5sq.m/L,

.3 Bakor 230-39,

.4 Hardcast GG-991,

.2 Lap seal adhesive: quick-setting for joints and lap sealing of vapour barriers.

.1 Acceptable Material:

.1 Foster 85-75 asbestos free, 6 sq.m/L,

.2 Bakor 230-06,

.3 Hardcast LG-671,

.3 Weld Pins:

.1 Weld pins 2.0 mm diameter, length to suit thickness of insulation.

Metal retaining clips, 32 mm square.

PART 3 EXECUTION

1.10 GENERAL

.1 Do work in accordance with recommendations of SMACNA duct liner standards as indicated in SMACNA HVAC Duct Construction Standards, Metal and Flexible, except as specified otherwise.

.2 Line inside of ducts where indicated.

.3 Duct dimensions, as indicated, are clear inside duct lining.

1.11 DUCT LINER

.1 Install in accordance with manufacturer's recommendations, and as follows:

.1 Fasten to interior sheet metal surface with 100% coverage of adhesive.

.1 Exposed leading edges and transverse joints to be factory coated or coated with adhesive during fabrication.

.2 In addition to adhesive, install weld pins not less than 2 rows per surface and not more than 425 mm on centres.

.3 Leading edge shall have sheet metal trim per SMACNA standards.

.2 In systems, where air velocities exceeds 20.3 m/sec, install galvanized sheet metal noising to leading edges of duct liner.

1.12 JOINTS

.1 Seal butt joints, exposed edges, weld pin and clip penetrations and damaged areas of liner with joint tape and sealer. Install joint tape in accordance with manufacturer's written recommendations, and as follows:

.1 Bed tape in sealer.

.2 Apply coats of sealer over tape.

.2 Replace damaged areas of liner at discretion of Owner.

.3 Protect leading and trailing edges of duct sections with sheet metal nosing having 15 mm overlap and fastened to duct.

END OF SECTION

PART 1 GENERAL

1.1 SUMMARY

.1 Section Includes:

.1 Supply, return and exhaust grilles and registers, diffusers and linear grilles, for commercial and residential use.

1.2 SYSTEM DESCRIPTION

.1 Performance Requirements:

.1 Catalogued or published ratings for manufactured items: obtained from tests carried out by manufacturer or those ordered by manufacturer from independent testing agency signifying adherence to codes and standards.

1.3 SUBMITTALS

.1 Product Data:

.1 Submit manufacturer's printed product literature, specifications and datasheet in accordance with Section 01 30 00 - Submittal Procedures. Include product characteristics, performance criteria, and limitations.

.2 Indicate following:

.1 Capacity.

.2 Throw and terminal velocity.

.3 Noise criteria.

.4 Pressure drop.

.5 Neck velocity.

.3 Instructions: submit manufacturer's installation instructions.

1.4 QUALITY ASSURANCE

.1 Health and Safety Requirements: do construction occupational health and safety in accordance with Section 01 70 12 - Safety Requirements.

1.5 DELIVERY, STORAGE AND HANDLING

.1 Packing, shipping, handling and unloading:

.1 Deliver, store and handle in accordance with Section 01 61 00 - Common Product Requirements.

.2 Deliver, store and handle materials in accordance with manufacturer's written

instructions.

.2 Waste Management and Disposal:

.1 Construction/Demolition Waste Management and Disposal: separate waste materials for reuse and recycling in accordance with Section 01 74 21 - Construction/Demolition Waste Management and Disposal.

1.6 MAINTENANCE

.1 Extra Materials:

.1 Provide maintenance materials in accordance with Section 01 78 00 - Closeout Submittals.

.2 Include:

.1 Keys for volume control adjustment.

.2 Keys for air flow pattern adjustment.

PART 2 PRODUCTS

1.7 GENERAL

.1 To meet capacity, pressure drop, terminal velocity, throw, noise level, neck velocity as indicated.

.2 Frames:

.1 Full perimeter gaskets.

.2 Plaster frames where set into plaster or gypsum board and as specified.

.3 Concealed fasteners.

.3 Concealed manual volume control damper operators.

.4 Colour: standard off white unless noted.

1.8 MANUFACTURED UNITS

.1 All grilles, registers and diffusers of same generic type. Products of one manufacturer.

.2 Acceptable manufacturers include but are not limited to E.H. Price, Nailor and Titus.

1.9 SUPPLY GRILLES AND

.1 General: with opposed blade dampers where

REGISTERS

indicated.

.2 Refer to Schedule on Drawings.

1.10 RETURN AND EXHAUST GRILLES AND REGISTERS

.1 General: with opposed blade dampers unless noted otherwise.

.2 Refer to Schedule on Drawings.

1.11 DIFFUSERS

.1 General: volume control dampers with flow straightening devices and gaskets where no duct damper provided.

.2 Refer to Schedule on Drawings.

PART 3 EXECUTION

1.12 MANUFACTURER 'S INSTRUCTIONS

.1 Compliance: comply with manufacturer's written recommendations or specifications, including product technical bulletins, handling, storage and installation instructions, and datasheet.

1.13 INSTALLATION

.1 Install in accordance with manufacturers instructions.

.2 Install with flat head screws in countersunk holes where fastenings are visible.

1.14 FIELD QUALITY CONTROL

.1 Contractor's Verification, include:

.1 Materials and resources.

.2 Storage and collection of recyclables.

.3 Construction waste management.

.4 Resource reuse.

.5 Recycled content.

.6 Local/regional materials.

.7 Low-emitting materials.

1.15 CLEANING

.1 Proceed in accordance with Section 01 74 11 - Cleaning.

.2 Upon completion and verification of performance of installation, remove surplus

materials, excess materials, rubbish, tools and equipment.

END OF SECTION

PART 1 - GENERAL

1.01 DESCRIPTION

.1 Comply with Requirements of Division One, General Requirements and all documents referred to therein.

.2 Comply with requirements of Section 21 05 00, Mechanical General Requirements and Section 21 05 01, Mechanical Basic Materials and Methods.

1.02 WORK PERFORMED BY THIS SECTION

.1 Heating, cooling, refrigeration piping systems.

.2 Supply and installation of boilers, pumps, convectors, condenser, tanks, coils, unit heaters and other heating/cooling systems piped components.

1.03 QUALITY ASSURANCE

.1 Qualifications: execute work of this section only by skilled tradesmen regularly employed in the installation of pressure piping systems and heating and cooling equipment.

.2 All filters to be ULC labelled and listed for flame spread rating of less than 25 and smoke classification of less than 50.

.3 Submittals: Submit shop drawings on boilers, cooling towers, fluid coolers, heat exchangers, pumps, terminal heating equipment, coils, chiller, condenser, air handling units, refrigeration system. Provide fan curves for all air handling units.

PART 2 - PRODUCTS

2.04 COOLING AND HEATING COILS

.1 Water Type: Provide heating coils as detailed on the coil schedule, A.R.I. rated and constructed of copper tubes and aluminium fins unless otherwise noted, and pressure tested for operation up to 1380 kPa (200 psi) for water coils. Pressure test refrigerant coils to [345 kPa (500 psi)] for R-410a. Refer to drawings for piping connections and dimensional data.

.2 Acceptable coils include but are not limited to those manufactured by Trane, McQuay, Sheldons, York, Carrier, Aerofin, Sentry Guard and Engineered Air.

2.28 HVAC SPLIT SYSTEMS

.1 Provide commercial air cooled split systems consisting of ceiling suspended fan coil terminals and remote air cooled condensing units with capacities and characteristics as described in the Equipment Schedules and in the following:

.1 Outdoor condensing unit:

.1 Factory assembled, single piece with all required wiring, piping, controls, R-22 refrigerant charge.
.2 Galvanized steel cabinet with baked enamel finish.
.3 Removable access panels for access to all components.
.4 Direct driven statically and dynamically balanced propeller type condenser fans with class A insulation and permanently lubricated ball bearings and internal thermal overload protection.
.5 Hermetic rotary type compressor with lubrication system, operating oil charge, suction line accumulator, muffler, NEMA class F motor, discharge valves, rubber vibration isolators.
.6 Aluminium fins/copper tube, cleaned, dehydrated, and sealed condenser coil.

.7 Refrigeration components: Refrigerant type is to be [R-407a R-410a]. liquid and suction line service valves and service gauge ports, accumulator, pressure relief, liquid and suction line piping kit, and refrigerant operating charge.

.8 Controls: Short cycling protection, automatic restart on power failure, high temperature and freeze protection, system diagnostics, compressor motor overcurrent, overtemperature protection, low ambient control to -280C.

.2 Indoor fan coil section:

.1 Cabinet: zinc coated steel with baked enamel paint and matching mounting brackets.

.2 Centrifugal fan with automatic motor driven vertical air sweep.

.3 Coils: Copper tube, aluminium fins and galvanized steel tube sheets with drip pan and drain connection.

.4 Permanently lubricated multispeed fan motor with inherent overload protection.

.5 Cleanable slide-out filters.

.6 Controls: microprocessor based for space temperature, optimum fan speed, run self diagnostics with test button, automatic restart after power failure, 15 hour timer cycle for system on/off, high discharge temperature shut-down. Also provide automatic change-over heat pump control with heat relay to enable operation of perimeter heating hot water convector valve for

.7 Wired remote system controller complete with interconnecting cable.

.2 Acceptable manufacturers include but are not limited to: Toshiba, Mitsubishi or Carrier. Also applies to to drawing M-6.01 “Split AC Unit Schedule”.

PART 3 - EXECUTION

3.01 EQUIPMENT AND TERMINALS

.1 Deliver equipment to the Site of the Work and store in area as designated by the

Contractor. Set equipment on temporary bases to avoid contact with the ground. Protect equipment from damage.

.2 Comply with manufacturer's requirements for the installation of all specified equipment.

.3 Locate equipment as shown on the drawings to provide best possible connection arrangement and accessibility for servicing. Provide clearances on all sides of equipment as required by Authorities having jurisdiction or manufacturer, whichever is greater.

.4 Install items of equipment such as convectors with due regard to Architectural treatment, and ensure all items are level and finished in keeping with good workmanship. Grade all convector elements upward in direction of flow refer to detail drawings.

3.02 EQUIPMENT START UP

.1 Follow manufacturer's instructions and have manufacturer's representative present to certify the installation.

.2 Check each item of equipment to ensure proper electrical connections, etc., and to verify proper operation.

3.03 WATER BALANCING

.1 Refer to Section 21 05 01.

.2 Provide flow measurement ports as shown on detail drawings and piping schematics in locations as directed by the water balancing specialist. Provide balancing valves where required as directed by the water balancing specialist.

.3 Provide any pump impeller modifications as recommended by the water balancing firm.

END OF SECTION 23 50 00

PART 1 GENERAL

1.1 RESPONSIBILITY

.1 This contractor shall be responsible for Section 25 05 01 – Controls and all applicable portions of Common Work Results.

.2 Comply with all LEED requirements to: 01 35 18

1.2 RELATED SECTIONS

.1 Common Work Results.

.2 Heating.

.3 Air Distribution.

.4 Electric Service.

1.3 SHOP DRAWINGS

.1 Submit shop drawings in accordance with Section 01 33 00.

.2 Indicate on complete control diagrams, positions, model numbers, settings, set point and reset schedules, piping and wiring layouts.

.3 Provide valve and damper schedules indicating size, configuration, capacity and locations. If size varies greater than (10%), obtain approval of CONSULTANT.

.4 Provide technical literature on system components.

.5 Provide “system architecture” diagram, indicating new system and integrating to existing systems identified.

.6 Provide sample “points verification” sheet.

1.4 MAINTENANCE MANUALS AND AS-BUILT DRAWINGS

.1 Provide maintenance data for incorporation into maintenance manual specified in Section 01 33 00.

.2 Provide “As-Built” information in accordance with Section 01 33 00.

1.5 GUARANTEE

.1 Provide a written guarantee against faulty material and workmanship for a period of one year from the date of acceptance.

1.6 TRAINING &

.1 Provide two (2) days training to the owner’s

PROGRAMMING

representative on the operation of the systems installed.

.2 Allow for two (2) days of additional programming as requested by Owner’s Representative.

.3 Allow for one (1) day of system verification. Notify CONSULTANT and one (1) week in advance of system verification. System verification shall be performed two (2) weeks in advance of request for interim inspection.

.4 Allow for sufficient verification time for HVAC controls verification and commissioning with commissioning agent.

1.7 DESCRIPTION

.1 The system shall directly control HVAC/Variable Frequency Drives equipment as specified in Part 3 Sequences of Operation and as noted on the control drawings.

.2 The system shall use the BACnet protocol for communication to the operator workstation and for communication between control modules. Schedules, set points, trends, and alarms specified (Sequences of Operation) shall be BACnet objects.

1.8 SCOPE OF WORK

.1 The words “controls”, “BMS” and “EMCS” shall be considered interchangeable and all refer to the system of controls for HVAC systems. The work covered by this specification and related sections consists of providing shop drawings, equipment, labour, materials, engineering, technical supervision and transportation as required to furnish and install a fully operational Energy Management Control System (EMCS) to control the facilities as shown on plans and as required to provide the operation specified in strict accordance with these specifications and subject to the terms and conditions of the contract. The work in general consists of but is not limited to, the following:

.1 The preparation of submittals and provisions of all related services.

.2 Furnish and install user interface, server, programmable control units, sensors, control devices and wire in the facilities as required to provide the operation specified.

.3 Load all software and provide all “locks” or “keys” required to implement a complete and operational EMCS. EMCS shall be ready for use, including all operating parameters, set points and schedules.

.4 Provide system testing of every point, sequence verification and points verifications prior to interim inspection. Submit point and sequence verifications prior to interim inspection.

.5 A complete dynamic colour graphics package including all necessary programming.

1.9 SYSTEM PERFORMANCE

.1 Performance Standards. System shall conform to the following minimum standards over network connections. Systems shall be tested using manufacturer's recommended hardware and software for operator workstation (server and browser for web-based systems).

.1 Graphic Display. A graphic with 20 dynamic points shall display with current data within 1 sec.

.2 Graphic Refresh. A graphic with 20 dynamic points shall update with current data within 8 sec. and shall automatically refresh every 15 sec.

.3 Configuration and Tuning Screens. Screens used for configuring, calibrating, or tuning points, PID loops, and similar control logic shall automatically refresh within 6 sec.

.4 Object Command. Devices shall react to command of a binary object within 2 sec. Devices shall begin reacting to command of an analog object within 2 sec.

.5 Alarm Response Time. An object that goes into alarm shall be annunciated at the workstation within 15 sec.

.6 Program Execution Frequency. Custom and standard applications shall be capable of running as often as once every 5 sec. Select execution times consistent with the mechanical process under control.

.7 Performance. Programmable controllers shall be able to completely execute DDC PID

control loops at a frequency adjustable down to once per sec. Select execution times consistent with the mechanical process under control.

.8 Multiple Alarm Annunciations. Each workstation on the network (one only required initially) shall receive alarms within 5 sec of other workstations.

.9 Reporting Accuracy. System shall report values with minimum end-to-end accuracy listed in Table 1.

.10 Control Stability and Accuracy. Control loops shall maintain measured variable at setpoint within tolerances listed in Table 2.

Table 1 - Reporting Accuracy

Measured Variable	Reported Accuracy
Space Temperature	±0.5°C (±1°F)
Ducted Air	±0.5°C (±1°F)
Outside Air	±1.0°C (±2°F)
Dew Point	±1.5°C (±3°F)
Water Temperature	±0.5°C (±1°F)
Delta-T	±0.15°C (±0.25°F)
Relative Humidity	±5% RH
Water Flow	±2% of full scale
Airflow (terminal)	±10% of full scale (see Note 1)
Airflow (measuring stations)	±5% of full scale
Airflow (pressurized spaces)	±3% of full scale
Air Pressure (ducts)	±25 Pa (±0.1 in. w.g.)
Air Pressure (space)	±3 Pa (±0.01 in. w.g.)
Water Pressure	±2% of full scale (see Note 2)
Electrical (A, V, W, Power Factor)	±1% of reading (see Note 3)
Carbon Monoxide (CO)	±5% of reading
Carbon Dioxide (CO_2)	±50 ppm

Note 1: 10% - 100% of scale
Note 2: For both absolute and differential pressure
Note 3: Not including utility-supplied meters

Table 2 - Control Stability and Accuracy

Controlled Variable	Control Accuracy	Range of Medium
Air Pressure	±50 Pa (±0.2 in. w.g.)	0-1.5 kPa (0-6 in. w.g.)
	±3 Pa (±0.01 in. w.g.)	-25 to 25 Pa (-0.1 to 0.1 in. w.g.)

Airflow	±10% of full scale
Space Temperature	±1.0ºC (±2.0ºF)
Duct Temperature	±1.5ºC (±3ºF)
Humidity	±5% RH
Fluid Pressure	±10 kPa (±1.5 psi)

±250 Pa (±1.0 in. w.g.) MPa (1-150 psi)
0-12.5 kPa (0-50 in. w.g.) differential

PART 2 PRODUCTS

2.4 D.D.C. CONTROLLERS

.1 D.D.C. Controllers

.1 The DDC controllers shall be native BACNet microprocessor based, stand alone, multi-tasking, multi-user, real time digital control processor; consisting of modular hardware, interface receptacle, communications port, sized to meet the requirements of this specification, sequence of operation and points list indicated. High level controllers shall be installed that communicate over Ethernet BACNet UDPI/P; Minimum one per penthouse and one per floor.

.1 Allow for 10% spare points on each DDC controller.

.2 DDC controllers shall be capable of monitoring the following type of inputs.

.1 Analog Inputs

.1 4-20 mAdc

.2 0-10 Vdc

.3 Thermistors

.4 10,000 ohm R.T.D.s

.5 10 K ohm R.T.D.s

.2 Digital Inputs

.1 Dry contacts

.2 Pulse accumulator

.3 Voltage sensing

.3 DDC controllers shall be capable of providing the following types of controlled outputs.

.1 Digital Outputs

.1 Contact closure

.2 Analog Outputs

.1 0-20 psi.

.2 4-20 mAdc

.3 0-10 Vdc

.4 Controllers Backup

.1 In the event of loss of normal power a battery backup shall be provided to support the real time clock and all volatile memory for a period of 100 hours.

.2 Upon restoration of normal power, the DDC Controller shall automatically resume full operation without manual intervention.

.3 Should DDC Controller memory be lost for any reason, the user shall have the capability of reloading the DDC Controller via the local RS-232C port.

.5 Resident Software.

.1 General:

.1 All necessary software to form a complete operating system as described in this specification shall be provided.

.2 The software programs specified in this section shall be provided as an integral part of DDC Controllers and shall not be dependent upon any higher level computer for execution.

.3 All custom programs and routines shall be fully programmable on-site without the use of any special software or hardware. The owner shall have the capability of adding or deleting points and modify control strategies from an on-site keyboard.

.2 Control Software Description:

.1 The DDC Controllers shall have the ability to perform the following pre-tested control algorithms:

.1 Two-position control.

.2 Proportional control.

.3 Proportional plus integral control.

.4 Proportional, integral, plus derivative control.

.2 Upon the resumption of normal power, DDC Controller shall analyse the status of all controlled equipment, compare it with normal occupancy scheduling and turn equipment on or off as necessary to resume normal operations after power failure.

.3 DDC Controllers shall have the ability to perform any or all of the following:

.1 Time-of-day scheduling.

.2 Time-of-work scheduling.

.3 Time-of-year scheduling.

.4 Daylight savings switch over.

.5 Day/Night setback control.

.6 Start-Stop Time Optimization.

.7 Temperature-compensated duty cycling.

.8 Temperature reset.

.9 Trend Logs.

.10 Demand limiting.

.6 FCC Guidelines

.1 Equipment shall comply with FCC Part 15, Class “A” device, designed to provide reasonable protection against radio frequency interference.

.7 All new controllers shall be powered from emergency power source and shall also have a UPS such that no memory losses will occur in a power loss situation. EMCS shall obtain EPS at provided source, and wire to controller.

.8 All controllers and UPS shall be mounted in a power ventilated, enclosed, lockable cabinet complete with 120V power outlet on outside of box.

.9 Owner shall provide numbering and addressing scheme for controllers.

.10 Acceptable Material:

.1 DELTA CONTROLS

.2

1.10 BACNET CONTROLLERS

.1 General:

.1 Provide an EMCS which can, without additional equipment and software, perform all the automatic temperature control and energy management functions as specified and shown on the drawings.

.2 EMCS to be fully distributed modular direct digital control (DDC) and installed as a complete package, including all software, hardware, operator input/output devices, field processing units, monitor/keyboard, central processing unit, printers, sensors and controls, wiring, relays, engineering, installation supervision and labour, calibration, software programming, and check out necessary for a complete and fully operational DDC system. Refer to sequences of operation in Part 3 of this section for operational requirements.

.2 Materials:

.1 Use new products the manufacturer is currently manufacturing and selling for use in new installations. Do not use this installation as a product test site unless explicitly approved in writing by Owner. Spare parts shall be available for at least ten years after completion of this contract.

.3 Communication:

.1 Control products, communication media, connectors, repeaters, hubs, and routers shall comprise a BACnet internet work. Controller and operator interface communication shall conform to ASHRAE/ANSI Standard 135-2010, BACnet.

.2 Provide Ethernet backbone for network segments noted on project drawings.

.3 Each controller shall have a communication port for temporary connection to a laptop computer or other operator interface. Connection shall support memory downloads and other commissioning and troubleshooting operations.

.4 Internet work operator interface and value passing shall be transparent to internet work architecture.

.5 An operator interface connected to a controller shall allow the operator to interface with each internet work controller as if directly connected. Controller information such as data, status, and control algorithms shall be viewable and editable from each internet work controller.

.6 Inputs, outputs, and control variables used to integrate control strategies across multiple controllers shall be readable by each controller on the internet work. Program and test all cross-controller links required to execute control strategies specified in Section *15900.* An authorized operator shall be able to edit cross-controller links by typing a standard object address or by using a point-and-click interface.

.7 Controllers with real-time clocks shall use the BACnet Time Synchronization service.

System shall automatically synchronize system clocks daily from an operator-designated controller via the inter-network. If applicable, system shall automatically adjust for daylight saving and standard time.

.8 System shall be expandable to at least twice the required input and output objects with additional controllers, associated devices, and wiring. Expansion shall not require operator interface hardware additions or software revisions.

.4 Operation Interface:

.1 Operator Interface. PC-based workstations shall reside on high-speed network with building controllers. Each workstation shall be able to access all system information. Protected by programmable password levels.

.2 Workstation and controllers shall communicate using native BACnet protocol. Workstation and control network backbone shall communicate using ISO 8802-3 (Ethernet) Data Link/Physical layer protocol and BACnet/IP addressing as specified in ASHRAE/ANSI 135-2001, BACnet Annex J.

.5 Controllers:

.1 General. Provide Building Controllers (BC), Advanced Application Controllers (AAC), Application Specific Controllers (ASC), and Smart Actuators (SA) / Smart Sensors (SS) as required to achieve performance specified in Section 15900 Article *1.13* (System Performance).

.2 BACNet:

.1 Building Controllers (BC). Each BC shall have demonstrated interoperability during at least one BMA Interoperability Workshop and shall substantially conform to BACnet Building Controller (B-BC) device profile as specified in ASHRAE/ANSI 135-2001, BACnet Annex L.

.2 Advanced Application Controllers (AACs). Each AAC shall have demonstrated interoperability during at least one BMA Interoperability

Workshop and shall conform to BACnet Advanced Application Controller (B-AAC) device profile as specified in ASHRAE/ANSI 135-2001, BACnet Annex L and shall be listed as a certified B-ASC in the BACnet Testing Laboratories (BTL) Product Listing.

.3 Application Specific Controllers (ASCs). Each ASC shall conform to BACnet Application Specific Controller (B-ASC) device profile as specified in ASHRAE/ANSI 135-2001, BACnet Annex L and shall be listed as a certified B-ASC in the BACnet Testing Laboratories (BTL) Product Listing.

.4 Smart Actuators (SA). Each SA shall conform to BACnet Smart Actuator (B-SA) device profile as specified in ASHRAE/ANSI 135-2001, BACnet Annex L and shall be listed as a certified B-SA in the BACnet Testing Laboratories (BTL) Product Listing.

.5 Smart Sensors (SS). Each SS shall conform to BACnet Smart Sensor (B-SS) device profile as specified in ASHRAE/ANSI 135-2001, BACnet Annex L and shall be listed as a certified B-SS in the BACnet Testing Laboratories (BTL) Product Listing.

.3 BACnet Communication

.1 Each BC shall reside on or be connected to a BACnet network using ISO 8802-3 (Ethernet) Data Link/Physical layer protocol and BACnet/IP addressing.

.2 BACnet routing shall be performed by BCs or other BACnet device routers as necessary to connect BCs to networks of AACs and ASCs..

.3 Each AAC and ASC shall reside on a BACnet network using the ARCNET or MS/TP Data Link/Physical layer protocol.

.4 Each SA shall reside on a BACnet network using the MS/TP Data Link/Physical layer protocol.

.5 The use of Protocol Gateways to

interconnect the BACnet system with other non-Bacnet systems is not permitted.

1.11 AIR TERMINAL CONTROLLERS

.1 Selected compatible with “Air Terminal Units”, Section 23 36 00.

.2 Installed with protective cover, rigid conduit connector, mounted firmly to parent duct.

2.6 FIELD DEVICES

.1 Temperature Sensors

.1 Space Temperature Sensors: Note – all space sensors shall be installed in a 2” x 4” metal box, complete with ½” EMT stubbed to an accessible location in ceiling.

.1 Indicated as “T” on drawings.

.1 10K ohm ±0.2°C at 25°C.

Features shall include:

.1 Set point adjustment, up and down.

.2 Temperature indication – LCD.

.3 Networking sensor c/w serial bus connection.

.4 Override button for unoccupied override.

.2 Indicated as “S” on drawings. Stainless steel faceplate.

.1 10K ohm ± 0.2°C at 25°C.

.3 Reverse Acting Thermostat

.1 Line voltage control.

.2 1.7°C cooling differential.

.2 Airstream Temperature Sensors

.1 Duct temperature sensors: 10K ohm, ±0.2°C from 0 to 70°C. Duct mounted, c/w 200 mm ss probe.

.2 Averaging sensors: As above, 16 element minimum, copper tube.

2.6 FIELD DEVICES – *(Cont’d)*

.3 Outdoor air temperature sensor: 10K ohm, ±0.2°C from 0 to 70°C, Range -34 to ±60°C, c/w ventilated,

treated PVC sun/wind shield, weatherproof enclosure. Install two on building, one on North, and one on East side. Program to monitor both.

.2 Water Temperature Sensors

.1 Immersion type sensor; 10K ohm, ±0.2°C, range -10 to 120°C, brass thermowell complete with removable ss tube. (Provide wells to Division 15600).

.3 Humidity Sensors

.1 Airstream Humidity Sensors

.1 To provide analog 4-20 mA input duct humidity.

.2 Range 0 to 100%, Accuracy ±2% RH, 225 mm long duct probe.

.2 Outdoor Air Humidity Sensor

.1 As in .1 above except with U.V. inhibited shield to match OAT sensor.

.4 Duct mounted pressure sensors

.1 4-20 mA, range to satisfy specified control, install where indicated for VAV control.

.6 Dampers - Provide all motorized dampers and actuators for this project unless noted otherwise.

.1 Dampers

.1 Opposed and Parallel Blade Dampers (as indicated).

.1 Extruded aluminum, interlocking blades, complete with extruded vinyl seals, extruded aluminum frame.

.2 Pressure-fit self-lubricated bronze bearings.

.3 Linkage: plated steel tie rods, brass pivots and plated steel brackets, complete with plated steel control rod.

.4 Performance

Characteristics:

.1 Leakage: in closed position to be less than 2% of rated air flow at 10 kPa differential across damper.

.2 Pressure drop: at full open position to be less than 8.0 Pa differential across damper at 5.08 m/s.

.5 Opposed blade damper for all modulating services unless otherwise indicated.

.6 Parallel blade dampers for all two position services unless otherwise indicated.

.7 Acceptable Material: TA Morrison (TAMCO Series 1000 and 9000). AutoDamp Series 01 and 02.

.2 Insulated Opposed and Parallel Blade Dampers

.1 Extruded aluminum, interlocking blades, complete with extruded vinyl seals, extruded aluminum frame.

.2 Pressure-fit self-lubricated bronze bearings.

.3 Linkage: plated steel tie rods, brass pivots and plated steel brackets, complete with plated steel control rod.

.4 Performance Characteristics:

.1 Leakage: in

closed position to be less than 2% of rated air flow at 1.0 kPa differential across damper.

.2 Pressure drop: at full open position to be less than 8.0 Pa differential across damper at 5.08 m/s.

.5 Opposed blade damper for all modulating services unless otherwise indicated.

.6 Parallel blade dampers for all two position services unless otherwise indicated.

.7 Frames: insulated with extruded polystyrene foam with R factor of 5.0.

.8 Blades: constructed from aluminum extrusions with internal hollows insulated with polyurethane or polystyrene foam, R factor of 5.0 parallel or opposed as indicated on schematics.

.6 Damper Actuators

.1 Two Position

.1 Spring return, brushless DC motor, direct shaft mounting, manual override, position indicator, conduit connector, adjustable range stop, integrated preload spring.

.2 Control Voltage: Line or low voltage as specified. Operating

Temperature: -32 to 50°C. Torque: 6.7 N.m min. Stroke time: 150 sec. Max.

.3 Modulating

.2

.1 Spring return, brushless DC motor, direct shaft mounting, manual override, position indicator, conduit connector, adjustable range stop, integrated preload spring.

.2 Control Voltage: Line or low voltage as specified, 4-20 mA. Operating Temperture: -32 to 50°C. Torque: 6.7 N.m min.. Stroke time: 150 sec. Max.

.1 General

.1 Contractor shall select valves according to manufacturer’s instructions, submit schedule indicating CV and pressure drop. Maximum PD 138 kPa.

.2 13 mm to 50 mm size 2-way.

.1 Body: Forged Brass.

.2 Ball: Chrome plated brass, characterized, brass stem.

.3 Seats: PTFE, with TEFZE disc, EPDM O-rings.

.4 Temp Rating: -18to 100°C.

2.6 FIELD DEVICES – *(Cont’d)*

.5 Press Rating: 2750 kPa.

.6 Shut-off rating: 1380 kPa.

.7 Actuator: Normally closed, fail open, control inputs: 4-20 mA (2-10Vdc)

modulating, spring return, 60 in. lb. minimum. Fail to recirc. Port for chilled, glycol 3-way.

.3 63 mm to 150 mm size 2-way.

.1 Body: Iron.

.2 Plug: Bronze with 316 ss stem.

.3 Seat: Bronze, with TFE V-ring packing.

.4 Temp Rating: 0 to 138°C.

.5 Press Rating: 860 kPa.

.6 Shut-off rating: 860 kPa.

.7 Actuator: Normally closed, fail open, control inputs: 4-20 mA (2.10Vdc) modulating, spring return, 133 in. lb. minimum. Fail to recirc. Port for chilled, glycol 3-way.

.8 Miscellaneous Devices

.1 Sensor (CSR):

.1 Solid state induced sensor power, capable of sensing current change due to motor failure, belt loss, slippage, adjustable trip level.

.2 Control Voltage: 24Vdc, 4-20 mA Operating Temperature: -15 to 85°C. Isolation: 600 VAC RMS Amp rating: 0 to 135A continuous Horsepower rating: To suit motor, VFD compatible where specified.

.3 Acceptable Material: Veris Industries Hawkeye or Approved Equal.

.2 Modem:

.1 High speed, capable of working on regular public phone lines, error control, data suppression, shall support all data speeds up to max.

.2 Speed: 33,600 baud.

.3 Relays: normally open,

single pole single throw 36 VA @ 24V. Provide necessary starting relays for fractional HP fans, pumps, cabinet and unit heaters.
.4 Differential pressure switch: snap action – SPDT, 60VA @ 24V, 17 to 250 Pa W.C.
.5 Air filter differential pressure: device shall provide local dP indication, signal analog feedback of dP to controller, programmable to initiate high dP trouble signals.

PART 3 EXECUTION

1.12 INSTALLATION ELECTRICAL

.1 Furnish electrical control wiring and conduit (24 and/or 120 volt) unless indicated otherwise on plans. All controls wiring including 120V and 24V shall be run in metal conduit (EMT) as specified. Emergency power shall be provided in dedicated EMCS junction boxes both under AHU's and on the floors by Division 16.

This contractor shall obtain power from nearest source and provide all necessary 120V or low voltage power distribution from that point.

.2 All conduit shall be run concealed in all finished areas (i.e. all areas except service areas such as the electrical room).

.3 All conduit under floor slabs, exposed to mechanical injury, or in wet locations shall be of the highest quality, rigid steel type for electrical service and shall e galvanized on the outside and enamelled on the inside. Electrical metallic tubing (thin wall) may be used where it is not wet location or subject to mechanical injury.

.4 Where conduit is run exposed, it shall be neat in appearance and run parallel to the structural lines of the building. Suitable fittings and covers shall be used. Proper offsets shall be made where conduit enters or leaves fittings and boxes. All conduit shall be securely fastened by approved hangers or malleable iron one-hole

straps at the following intervals:

Conduit Size	Horizontal Hanging Points	Vertical Hanging Points
12 and 20 mm	1500 mm	2000 mm
25 and 31 mm	1800 mm	2400 mm
Over 31 mm	3000 mm	3000 mm

.5 All threads shall be set neatly, the ends squared and the inner diameter reamed smooth to remove burrs.

.6 Conduit boxes for all receptacles, thermostats and switches where conduit is run exposed shall be of the FS type.

.7 Cover screws for all conduit fittings and boxes shall be carefully cut to avoid damage to conductors.

.8 During construction all open ends of conduit shall be capped with threaded caps or push pennies immediately after installation. The use of wooden plugs will not be permitted.

.9 All conduit and fittings shall form a continuous metallic path and shall be grounded in accordance with the latest requirements of the Canadian Electrical Code.

.10 Conduit terminations at equipment whose position is adjustable or which is subject to vibration shall flexible, galvanized steel for a length not exceeding 0.5 m. Where moisture conditions are such to require waterproof wiring, the flexible conduit shall have a plastic jacket seal-tight or equal.

.11 Wire cable and conduit shall be installed to meet or exceed CSA Electrical Code latest edition.

.12 All conductors and branch circuit wiring shall be of sufficient size so that the voltage drop from the service entrance to the device being fed is not greater than 3% with the circuit loaded as shown.

1.13 START-UP AND ADJUSTMENT

.1 Upon completion of installation, test, adjust and regulate controls or safety equipment provided

under this section.

.2 Adjust and place in operating condition.

.3 Plasticized control and wiring schematics shall be provided for each fan system mounted inside cabinet enclosure.

.4 Supply all necessary hardware and software for full on site programming.

1.14 ACRONYMS

.1 List:

T.O.D.	=	Time of Day
S/S Push Button	=	Start/Stop OPB = Override
CSR	=	Current Sensing Relay
OAT	=	Outdoor Air Temperature
RAT	=	Return Air Temperature
EAT	=	Exhaust Air Temperature
LAT	=	Leaving Air Temperature
SAT	=	Supply Air Temperature
MAT	=	Mixed Air Temperature

1.15 ACRONYMS – *(Cont'd)*

HCT	=	Heating Coil Temperature
CCT	=	Cooling Coil Temperature
LWT	=	Leaving Water Temperature
OAD	=	Outdoor Air Dampers
MAD	=	Mixed Air Dampers
EAD	=	Exhaust Air Dampers
PBUD Damper	=	Parallel Blade Uninsulated
PBID Damper	=	Parallel Blade Insulated
OBUD Damper	=	Opposed Blade Uninsulated
OBID Damper	=	Opposed Blade Insulated
HRP	=	Heat Recovery Pipes
H/C	=	Heating Coil
C/C	=	Cooling Coil
G/C	=	Glycol Coil
HCV	=	Heating Control Valve
CCV	=	Cooling Control Valve
TCV	=	Temperature Control Valve
RHCV	=	Reheat Control Valve
SAH	=	Supply Air Humidity
RAH	=	Return Air Humidity
HUM	=	Humidifier
AFS	=	Air Flow Sensor

SP	=	Static Pressure
FS	=	Freezestat
DP	=	Differential Pressure
CSR	=	Current Sensor (or Switch)
CO	=	Carbon Dioxide
AO	=	Analog Output
DO	=	Digital Output
AI	=	Analog Input
DI	=	Digital Input

1.16 MCW CONTROLS LEGEND

.1 Refer to the MCW controls legend (a total of 3 pages) attached to the end of this section.

1.17 MCW POINT NAMES AND DESCRIPTORS

.1 Refer to the MCW point name and descriptors (a total of 6 pages) attached to the end of this section.

1.18 CONTROLS SCHEMATICS

.1 BMS-12 Typical Room Controls

1.19 SEQUENCE OF OPERATION

.1 General:

.1 Refer to schematics on the drawings attached at the end of this section.

.2 Room Temperature Set Points (adjustable):

.1 Unless otherwise noted, the following are temperature set-points for conditioned spaces of general areas:

.1 “Occupied” heating: 22.2°C

.2 “Unoccupied” heating: 16.0°C

.3 “Occupied” cooling: 23.9°C

.4 “Unoccupied” cooling: 29.0°C

.3 Unless otherwise noted, Heating and Cooling Mode is defined as follows:

.1 Heating Mode: When Outside Air Temperature is at or below 13 °C

.2 Cooling Mode: When Outside Air Temperature is at above 13 °C.

.2 Air System (Supply) Control

.1 When the supply fan is off, the outside air damper D1and relief air damper D2 shall be fully closed the return damper D3 shall be fully opened, the heating valve (V1) shall be opened and the DX cooling shall be

disabled. All the primary dampers on the VAV terminal shall be closed.
(Note: On a signal from the EMCS to start the supply fan, all the primary dampers on the VAV terminal shall be opened before the supply fan starts.)

.2 The unit shall start according to TOD scheduling or optimum start/stop programming according to the operators instructions.

.3 The system shall start-up and operate with full return air until 2 hour before occupancy. For this final 2 hour, the dampers (D1, D2 and D3) shall position to provide minimum outside air to ensure minimum ventilation before occupancy.

.4 Supply air sensor T1 shall operate through the EMCS to maintain set point by modulating the DX cooling controller, the dampers (D1, D2 and D3) and the heating control valve V1 in sequence. These controls shall be non-overlapping.
The operator shall be able to read, from the system dynamic graphic, the following:
.1 percentage opening of valve V1
.2 position of the outside air damper D1.
.3 No. of cooling stages.

.5 Static pressure sensor SP (see plan drawings for location) shall operate through EMCS to maintain set point by modulating the variable speed controller at the supply fan. Return fan shall operate as one and shall track the speed of the supply fan.

.6 On sensing outdoor air temperature (OAT) greater than 22 degrees C, the EMCS shall position the dampers to minimum O.A. On sensing below 22 degrees C and above 13 degree C, the dampers will be modulated to maintain the temperature sensor T1 set point (Economizer). On sensing the outside air temperature below 13 degree C, the outside air damper D1 shall be in minimum position.

.7 Mixed air temperature sensor T-2 shall override discharge temperature control of the dampers to maintain minimum mixed air temperature setpoint.

.8 The variable speed controller of the return fans RF-1 shall be operated through the EMCS to maintain a positive pressure in the space.

The EMCS supplier/contractor is required to work with the air-balancing contractor in the commissioning of this system feature, to achieve the above conditions.

.10 Interlocks: Return fan to supply fan. Supply fan lead.

.11 Safeties: Supply and return fan shall stop if:

.1 Smoke detectors (Div. 16) sense products of combustion.

.2 On Heating Coil:

.1 If FR at coil discharge senses a temperature lower than set point.

.2 If LT at coil aquastat senses a temperature lower than set point.

.3 Air System (Exhaust) Control

.1 The unit shall start according to TOD scheduling or optimum start/stop programming according to the operator’s instructions.

.2 When the supply fan is off, the outdoor D1 and relief air dampers D3 will be fully closed, the return damper D2 will be fully opened, by-pass dampers (D4 to D7) shall be open and the heating valve V-2 will be open to the coil.

.3 Start the system and operate with full return air until 1/2 hour before occupancy. For this final 1/2 hour the dampers will be set to minimum position to ensure minimum ventilation before occupancy.

.4 Supply air sensor T-1 operate through the EMCS to maintain supply air temperature set point by modulating the dampers (D-1, D-2, D-3), heat pipe, by-pass dampers (D-4 to7), the

heating valve (V-2) in sequence. These controls shall be non-overlapping.

.5 EMCS shall close heating coil valve at night but mixed air temperature sensor in air handling unit plenum shall override the EMCS and modulate control valve V-2 to maintain plenum temperature setpoint.

.6 The operator shall be able to read, from the system dynamic graphic, the following:

.1 percentage opening of valve heating valve V2

.2 position of the outside air damper D1.

.3 Status of supply and return fans.

.7 On sensing outdoor air temperature (OAT) greater than 22 degrees C, the EMCS shall position the dampers (D1, D2 and D3) to minimum O.A. On sensing below 22 degrees C and above 13 degree C and the outside air dew point is 3 degree lower than the room dew point, dampers shall be modulated to maintain the T2 set point (Economizer). On sensing the outside air temperature below 13 degree C, the outside air damper D1 shall be in minimum position.

.8 The supply air temperature setpoint shall be able to be re-set by the return air temperature.

.9 Differential pressure sensors across filters shall send a signal to the EMCS if reading is higher than set point.

.10 When the heating plant status is on, the heating coil valve shall modulate to maintain the supply air temperature setpoint. When the heating plant status is off, the heating coil valve shall be in the fully open position.

.11 Heating Pumps shall:

.1 Start and stop with fans when outdoor temperature is below 18 degree C

.2 Run continuously when outdoor temperature is below 4 degree C

.3 NOT operate when outdoor

temperature. is above 18 degrees C.

.12 Interlock: Return fan to supply fan (LEAD).

.13 Safeties:

.1 Provide low temperature protection and low limit aquastats as shown.

.2 Smoke detectors (Div.16) sense products of combustion.

.3 Lead fan stop if:

.1 Low limit thermostat LT-1 at heating coil discharge senses below its setpoint .

.2 Low limit aquastat LT-2 senses below its setpoint.

.4 On restart, engage equipment in a sequenced startup strategy.

.5 The air handling unit shall stop if the boiler plant status is off and the outdoor air temperature is below 1.5°C.

.14 On loss of EMCS controls all devices to return to their fail safe position.

3.8 MISCELLANEOUS REQUIREMENTS

.1 Coordinate dampers with Ventilation. Controls provides damper, ventilation installations.

.2 Coordinate control valves with Heating. Controls provides control valves, heating installation.

.4 Refer to 23 05 53 01 for identification requirements.

.5 All HVAC controls shall be fed from emergency power (EPS) source. Provide UPS at each controller panel to bridge time lapse to generator start. EPS provided by Electrical. Refer to electrical drawings for locations.

.6 For fans with speed drives, perform interlock wiring for freezestats, fire alarm points, smoke venting overrides to and within motor starters.

.7 Provide shutdown of AHU systems from

Fire Alarm input point.

.8 Coordinate speed drives with Ventilation and Heating. Confirm all motors inverter duty. Cooperate with Contractors during startup.

END OF SECTION

Part 1 GENERAL

1.1 RELATED REQUIREMENTS

.1 Section 26 05 00 Common Works Results for Electrical.

1.2 ACTION AND INFORMATIONAL SUBMITTALS

.1 Submit in accordance with Section 01 33 00 - Submittal Procedures.

.2 Product Data:

.1 Submit manufacturer's instructions, printed product literature and data sheets and include product characteristics, performance criteria, physical size, finish and limitations.

1.3 CLOSEOUT SUBMITTALS

.1 Submit in accordance with Section 01 78 00 - Closeout Submittals.

.2 Operation and Maintenance Data: submit operation and maintenance data for incorporation into manual.

1.4 WORK INCLUDED

.1 Include in the tender price the cost of an independent agency for on-site engineering inspection and testing and co-ordination of the following main distribution equipment.

Secondary Switchboard
Distribution Equipment
Emergency Distribution
Panelboards
MCC’s
Digital Metering System
Lighting Control
Fire alarm, etc.

1.5 SUBMITTALS

.1 Submit the co-ordination study in the form of sepia shop drawings before the submission of equipment shop drawings for review to the:

.1 Departmental Representative
.2 Power Supply Authority, if required.
.3 Inspection Authority, if required.

Part 2 – PRODUCTS

NIL

Part 3 – EXECUTION

3.1 EXTENT OF TESTING & INSPECTION

1 This engineering inspection and testing shall be done prior to the system being energized and shall include the following items where applicable:

2 Testing, cleaning where necessary, and calibrating all relays and circuit breaker trip devices. (Calibration of all protective devices shall conform to requirements of approved co-ordination curves.)

3 Transformers of 100 KVA and over shall be subject to the following tests:

.1 Insulation Resistance

.2 Ratio

.3 Polarity

.4 Phase Angle

4 Function test of associated control devices.

5 Megger test interconnecting cables.

6 Replacement of fuses destroyed or damaged during the testing.

7 Under a minimum of 50% rated load conditions perform an infra-red scan of the main distribution equipment.

8 The presence, for the length of the required, or qualified and competent equipment service representatives during start-up.

9 Forward to the Departmental Representative for approval prior to energization of the distribution system and equipment, four neat, typewritten copies of the engineering and testing report.

3.2 COORINATION & SHORT CIRCUIT STUDY

1 The protective system devices have been selected such that protection is adequate and good co-ordination is possible, however, since difference do exist between manufacturers, some changes in trip ratings or relay settings may be necessary and shall be carried out.

2 Arrange for the independent testing company to carry out the following

.3 Immediately upon award of the contract and prior to the manufacture of the switchboards, prepare a set of co-ordination curves on KE No. 336E

time current characteristic graph paper and forward eight copies to the Departmental Representative for his approval. Make any changes as directed by the Departmental Representative at no additional charge to the Departmental Representative.

.4 This shall be accompanied by supporting symmetrical as well as asymmetrical fault current calculation data with tabulations to verify protection of the various elements of the system under maximum and minimum fault conditions at the various points in the system.

.5 The time-current characteristic curves for the following shall be plotted:

.1 The relays and fuses protecting the incoming service.

.2 Main and feeder protective devices at all voltage levels used in the distribution system.

.3 Protective devices associated with the largest motor in each MCC, the refrigeration compressor, and largest device in each distribution panel.

.4 Transformer damage curves and cable damage curves co-operate with and obtain from the utility and other manufacturers of equipment requiring protective devices to be used in the distribution system and prepare co-ordination curves as soon as possible. Be responsible, along with the other manufacturers of equipment connected to the distribution system, to ensure that the proper control and protective devices are selected such that they co-ordinate with all protective devices.

.6 It shall be the responsibility of the switchgear manufacturer to examine the plans and specifications to ensure that all the relays and protective devices being installed in the distribution system will provide satisfactory co-ordination.

.7 . Breaker frame sizes, sensors, delay types, power fuses, limiters and fuses shall be provided in accordance with the approved co-ordination study.

END OF SECTION

PART 1 GENERAL

1.1 RELATED REQUIREMENTS

.1 Sections of Division 01.

1.2 REFERENCES

.1 CSA International
- .1 CAN/CSA-C22.2 No. 18-.2-06 (R2011), Non-metallic outlet boxes
- .2 CAN/CSA-C22.2 No. 65-13(R2013), Wire Connectors (Tri-National Standard with UL 486A-486B and NMX-J-543-ANCE-03).

.2 Electrical and Electronic Manufacturers Association of Canada (EEMAC)
- EEMAC 1Y-2-1961, Bushing Stud Connectors and Aluminum Adapters (1200 Ampere Maximum Rating).

.3 National Electrical Manufacturers Association (NEMA).

1.3 ACTION AND INFORMATIONAL SUBMITTALS

.1 Submit in accordance with Section 01 33 00 - Submittal Procedures.
- .1 Submit manufacturer's instructions, printed product literature and data sheets and include product characteristics, performance criteria, physical size, finish and limitations.

.2 Submit for review single line electrical diagrams under plexiglass and locate as indicated.
- .1 Electrical distribution system, in main electrical room.

.3 Submit for review fire alarm riser diagram, plan and zoning of building under plexiglass at fire alarm control panel and annunciator.

1.4 PRODUCT STANDARDS AND ALTERNATIVES

.1 Provide new material and equipment as specified and to the acceptance of the Departmental Representative. Manufacturer's names are listed to set a standard of quality, performance, capacity, appearance and serviceability.

.2 Assume full responsibility for ensuring that when providing other acceptable manufacturers all space, weight, connections, power and wiring requirements, etc. are considered, and costs therefore included in the tender. Equipment requiring greater than specified energy requirements or unduly limiting service space requirements will not be accepted.

.3 All electrical equipment, material, wiring and devices to conform to the Canadian Electrical Code for the purpose for which they are to be used and bear the approval of the CSA or have special approval of the inspection authority. All equipment to be designed and manufactured in accordance with applicable EEMAC and ANSI specifications.

1.5 SPRINKLER PROOFING

.1 The building is fully sprinklered. All electrical equipment, including but not limited to, switchboard, panelboards, switches, transformers, fire alarm panel etc., shall be sprinkler proofed

PART 2 PRODUCTS

1.6 DESIGN REQUIREMENTS

.1 Operating voltages: to CAN3-C235.

.2 Motors, electric heating, control and distribution devices and equipment to operate satisfactorily at 60 Hz within normal operating limits established by above standard.

.1 Equipment to operate in extreme operating conditions established in above standard without damage to equipment.

.3 Language operating requirements: provide identification nameplates and/or labels for control items in English and French.

.4 Use one nameplate and/or label for both languages.

1.7 MATERIALS AND EQUIPMENT

.1 Provide material and equipment in accordance with Section 01 61 00 - Common Product Requirements.

.2 Material and equipment to be CSA certified. Where CSA certified material and equipment is not available, obtain special approval from authority having jurisdiction and inspection authorities before delivery to site and submit such approval as described in PART 1 - ACTION AND INFORMATIONAL SUBMITTALS.

.3 Factory assemble control panels and component assemblies.

1.8 ELECTRIC MOTORS, EQUIPMENT AND CONTROLS

.1 Verify installation and co-ordination responsibilities related to motors, equipment and controls, as indicated.

.2 Control wiring and conduit: in accordance with Section 26 29 03 - Control Devices

except for conduit, wiring and connections below 50 V which are related to control systems specified in mechanical sections and as shown on mechanical drawings.

1.9 WARNING SIGNS

.1 Warning Signs: in accordance with requirements of authority having jurisdiction, inspection authorities, Departmental Representative and Departmental Representative.

.2 Decals and signs, minimum size 175 x 250 mm.

1.10 WIRING TERMINATIONS

.1 Ensure lugs, terminals, screws used for termination of wiring are suitable for either copper or aluminum conductors.

1.11 EQUIPMENT IDENTIFICATION

.1 Identify electrical equipment with nameplates and labels as follows:

.1 Nameplates: 3 mm thick plastic engraving sheet matt white finish face, black core, lettering accurately aligned and engraved into core, mechanically attached with self-tapping screws.

.2 Sizes as follows:

NAMEPLATE SIZES

Size 1	10 x 50 mm	1 line3 mm high le
Size 2	12 x 70 mm	1 line5 mm high le
Size 3	12 x 70 mm	2 lines3 mm high l
Size 4	20 x 90 mm	1 line8 mm high le
Size 5	20 x 90 mm	2 lines5 mm high l
Size 6	25 x 100 mm	1 line12 mm high l
Size 7	25 x 100 mm	2 lines6 mm high l

.2 Labels: embossed plastic labels with 6 mm high letters unless specified otherwise.

.3 Wording on nameplates and labels to be approved by Departmental Representative prior to manufacture.

.4 Allow for minimum of twenty-five (25) letters per nameplate and label.

.5 Nameplates for terminal cabinets and junction boxes to indicate system and/or voltage characteristics.

.6 Identify equipment with Size 3 labels engraved "ASSET INVENTORY NO. _____" as directed by Departmental Representative.

.7 Disconnects, starters and contactors: indicate equipment being controlled and voltage.

.8 Terminal cabinets and pull boxes: indicate system and voltage.

.9 Transformers: indicate capacity, primary and secondary voltages.

1.12 WIRING IDENTIFICATION

.1 Identify wiring with permanent indelible identifying markings, numbered coloured plastic tapes, on both ends of phase conductors of feeders and branch circuit wiring.

.2 Maintain phase sequence and colour coding throughout.

.3 Colour coding: to CSA C22.1.

.4 Use colour coded wires in communication cables, matched throughout system.

1.13 CONDUIT AND CABLE IDENTIFICATION

.1 Colour code conduits, boxes and metallic sheathed cables.

.2 Code with plastic tape or paint at points where conduit or cable enters wall, ceiling, or floor, and at 15 m intervals.

.3 Colours: 25 mm wide prime colour and 20 mm wide auxiliary colour.

Prime	Auxiliary	
up to 250 V	Yellow	
up to 600 V	Yellow	Green
up to 5 kV	Yellow	Blue
up to 15 kV	Yellow	Red
Telephone	Green	
Other Communication Systems		Green
Fire Alarm	Red	
Emergency Voice	Red	Blue
Other Security Systems		Red

1.14 FINISHES

.1 Shop finish metal enclosure surfaces by application of rust resistant primer inside and outside, and at least two coats of finish enamel.

.1 Paint outdoor electrical equipment "equipment green" finish to EEMACY1-2-1979.

.2 Paint indoor switchgear and distribution enclosures light gray to EEMAC2Y-1-1958.

1.15 CIRCUIT IDENTIFICATION

.1 All equipment, receptacles, switches, starters, disconnects , etc. will be provided with circuit identification number in accordance with 2.6.

Part 2 EXECUTION

2.1 EXAMINATION

.1 Verification of Conditions: verify that conditions of substrate previously installed

under other Sections or Contracts are acceptable for equipment installation in accordance with manufacturer's written instructions.

.1 Visually inspect substrate in presence of Departmental Representative.

.2 Inform Departmental Representative of unacceptable conditions immediately upon discovery.

.3 Proceed with installation only after unacceptable conditions have been remedied and after receipt of written approval to proceed from Departmental Representative.

2.2 INSTALLATION

.1 Do complete installation in accordance with CSA C22.1 except where specified otherwise.

.2 Do overhead and underground systems in accordance with CAN/CSA-C22.3 No.1 except where specified otherwise.

2.3 NAMEPLATES AND LABELS

.1 Ensure manufacturer's nameplates, CSA labels and identification nameplates are visible and legible after equipment is installed.

2.4 CONDUIT AND CABLE INSTALLATION

.1 Install conduit and sleeves prior to pouring of concrete.

.1 Sleeves through concrete: schedule 40 steel pipe, sized for free passage of conduit, and protruding 50 mm.

.2 If plastic sleeves are used in fire rated walls or floors, remove before conduit installation.

.3 Install cables, conduits and fittings embedded or plastered over, close to building structure so furring can be kept to minimum.

2.5 LOCATION OF OUTLETS

.1 Locate outlets in accordance with Section 26 05 32 - Outlet Boxes, Conduit Boxes and Fittings.

.2 Do not install outlets back-to-back in wall; allow minimum 150 mm horizontal clearance between boxes.

.3 Change location of outlets at no extra cost or credit, providing distance does not exceed 3000 mm, and information is given before installation.

.4 Locate light switches on latch side of doors.

.1 Locate disconnect devices in mechanical and elevator machine rooms on latch side

of floor.

2.6 MOUNTING HEIGHTS

.1 Mounting height of equipment is from finished floor to centreline of equipment unless specified or indicated otherwise.

.2 If mounting height of equipment is not specified or indicated, verify before proceeding with installation.

.3 Install electrical equipment at following heights unless indicated otherwise.

- .1 Local switches: 1200 mm.
- .2 Wall receptacles:
  - .1 General: 300 mm.
  - .2 Above top of continuous baseboard heater: 200 mm.
  - .3 Above top of counters or counter splash backs: 175 mm.
  - .4 In mechanical rooms: 1200 mm.
- .3 Panelboards: as required by Code or as indicated.
- .4 Telephone and interphone outlets: 300 mm.
- .5 Wall mounted telephone and interphone outlets: 1200 mm.
- .6 Television outlets: 300 mm.
- .7 Wall mounted speakers: 2100 mm.
- .8 Clocks: 2100 mm.
- .9 Door bell pushbuttons: 1200 mm.
- .10 Receptacles within communication rooms mounted at 1500 mm AFF and spaced at a minimum of 1.8m around perimeter walls.

2.7 CO-ORDINATION OF PROTECTIVE DEVICES

.1 Ensure circuit protective devices such as overcurrent trips, relays and fuses are installed to required values and settings.

2.8 FIELD QUALITY CONTROL

.1 Load Balance:

- .1 Measure phase current to panelboards with normal loads (lighting) operating at time of acceptance; adjust branch circuit connections as required to obtain best balance of current between phases and record changes.
- .2 Measure phase voltages at loads and adjust transformer taps to within 2% of rated voltage of equipment.
- .3 Provide upon completion of work, load balance report as directed in Part 1 - Action And Informational Submittals, phase and neutral currents on

panelboards, dry-core transformers and motor control centres, operating under normal load, as well as hour and date on which each load was measured, and voltage at time of test.

.2 Conduct following tests in accordance with Section 01 45 00 - Quality Control.

.1 Power generation and distribution system including phasing, voltage, grounding and load balancing.

.2 Circuits originating from branch distribution panels.

.3 Lighting and its control.

.4 Motors, heaters and associated control equipment including sequenced operation of systems where applicable.

.5 Systems: fire alarm.

.6 Insulation resistance testing:

.1 Megger circuits, feeders and equipment up to 350 V with a 500 V instrument.

.2 Megger 350-600 V circuits, feeders and equipment with a 1000 V instrument.

.3 Check resistance to ground before energizing.

.3 Carry out tests in presence of Departmental Representative.

.4 Provide instruments, meters, equipment and personnel required to conduct tests during and at conclusion of project.

.5 Manufacturer's Field Services:

.1 Obtain written report from manufacturer verifying compliance of Work, in handling, installing, applying, protecting and cleaning of product and submit Manufacturer's Field Reports as described in Part 1 - Action And Informational Submittals.

.2 Provide manufacturer's field services consisting of product use recommendations and periodic site visits for inspection of product installation in accordance with manufacturer's instructions.

2.9 SYSTEM STARTUP

.1 Instruct Departmental Representative and operating personnel in operation, care and maintenance of systems, system equipment and components.

.2 Arrange and pay for services of manufacturer's factory service DCC to supervise start-up of installation, check, adjust, balance and calibrate components and instruct operating personnel.

.3 Provide these services for such period, and for as many visits as necessary to put equipment in operation, and ensure that operating personnel are conversant with aspects of its care and operation.

2.10 CLEANING

.1 Progress Cleaning: clean in accordance with Section 01 74 11 - Cleaning.

.1 Leave Work area clean at end of each day.

.2 Final Cleaning: upon completion remove surplus materials, rubbish, tools and equipment in accordance with Section 01 74 11 - Cleaning.

2.11 COMMISSIONING

.1 Refer to the commissioning (CX) Plan and participate in the commissioning of the building as specified therein.

2.12 PHASING

.1 Refer to Division 1 for the phasing of the project. Ensure that all systems and equipment are tested and verified to facilitate occupancy of each phase of construction and that the systems are certified and approved by the Authority Having Jursidiction.

END OF SECTION

Part 1 GENERAL

1.1 GENERAL

.1 The following is the strategy for Commissioning. Commissioning is a process in which the Cx Team Members, the Design Consultants, PWGSC Design and Quality Assurance Authority, PWGSC Project Manager, General Contractor, Commissioning Manager, the Owner, General Contractor (GC), and the Electrical Contractor. The Owner has a skilled team of building staff and operators who can competently run a building provided they are given the appropriate background information, training and documentation.

.2 This specification section must be read in close conjunction with the noted commissioning sections below:

.1 Section 01 33 00 – Submittal Procedures.

.2 Section 01 91 31 – Commissioning (Cx) Plan.

.3 Section 01 91 33 - Commissioning Form.

.4 Section 01 91 41 - Commissioning Training.

.3 The Electrical Contractor to meet all additional requirements noted in the referenced documents above as well as the work identified within the related sections below.

.4 Acronyms:

.1 AFD – Alternate Forms of Delivery, Service Provider.

.2 BAS – Building Automation System (Also referred to EMCS).

.3 EMCS – Energy Monitoring and Control Systems.

.4 O & M – Operation and Maintenance

.5 ICL – Installation Check Lists

.6 CL2 - Containment Level 2

.7 PI - Product Information (Forms).

.8 PV – Performance Verification (Forms).

.9 FPT – Functional Performance Test (Plans).

.10 TAB – Testing, Adjusting and Balancing.

.11 OEM – Original Equipment Manufacturer.

.12 LSC – Life Safety Compliance.

.13 M&E – Mechanical and Electrical.

.14 WHMIS – Workplace Hazardous Materials Information System.

.15 MSDS – Material Safety Data Sheet.

.16 OPR – Owner’s Project Requirements.

1.2 RELATED SECTIONS

.1 Division 26 Electrical Systems

.2 Division 27 Communication Services

.3 Division 28 Fire Detection & Alarm

1.3 RESPONSIBILITIES

.1 The following are the general responsibilities for commissioning of each of the major participants.

.1 Design Consultant

.2 Electrical Contractor – Construction:

.1 General:

.1 The Electrical Contractor shall be responsible for the commissioning process detailed within the Electrical Specifications Sections.

.2 The Electrical Contractor shall conform to the commissioning requirements detailed in Electrical Specification and the Commissioning Specifications in Division 01

.3 The Electrical Contractor shall coordinate and cooperate with the Mechanical Contractor as detailed in Specification sections

of the Mechanical and Electrical Specifications and as required to meet all commissioning requirements.

.4 Assign a Commissioning Coordinator who will have the required decision making authority/commissioning expertise and who is dedicated to the commissioning process.

.5 Explain and ensure all Sub-Contractors understand the commissioning requirements. The Electrical Contractor shall schedule all commissioning tasks required to be completed by their Sub-Contractors.

.6 If the project has phases the Record Drawings shall be submitted at the completion of each phase. The Electrical Contractor shall at the end of the project submit a full consolidated set of recordings.

.2 Meetings:

.1 Throughout the Construction Schedule the Electrical Contractor shall be required to attend regular commissioning and punch list meetings.

.2 Once the Electrical Contractor has completed the test forms, there will be detailed meetings with

the Design Consultant, Commissioning Manager and Electrical Contractor to discuss the testing methods and test forms to ensure that when start-up occurs the testing will go smoothly.

.3 Throughout the duration of the equipment and systems start-up phase of the project the Electrical Contractor shall attend punch list meetings.

.3 Equipment Start up:

.1 The Electrical Contractor shall provide notification of the scheduled date of completion for each system or key item of electrical distribution equipment in writing to the Commissioning Manager and Design Consultant a minimum of ten (10) working days prior to start-up.

.2 Prior to providing notification of completion, the Electrical Contractor shall review the work site and ensure all of the above are complete. In addition all labeling must be complete.

.3 Upon notice of scheduled completion separate walk thoughts shall be scheduled with the Electrical Contractor.

.4 The Electrical Contractor shall participate in construction complete

walkthroughs for each system, sub-system or key item of electrical distribution equipment. Any items found to be not complete will be documented on a punch list. Items that are deemed to be essential for test run must be completed prior to the equipment or system being turned on.

.5 The Electrical Contractor shall participate in Health and Safety walkthroughs for each system, sub-system or key item of electrical distribution equipment prior to the equipment being started.

.4 Commissioning Test Forms:

.1 Rectify deficiencies documented in the PI, installation, start-up, or PV functional performance Test Forms.

.2 Complete and assist with forms for PI, installation start-up and PV testing with Electrical Contractor.

.3 Complete and assist with form for all integration systems performance testing with Electrical Contractor.

.4 Update, create and complete forms as specified.

.5 Electrical Contractor Testing:

.1 The Electrical Contractor and the Commissioning Manager will develop lists of tasks and schedules for

building systems performance testing and demonstration. The Electrical Contractor will prepare and distribute to the commissioning Manager a start-up schedule which the Electrical Contractor shall utilize in developing their schedule.

.2 Working with the Electrical Contractor and the Commissioning Manager, the Electrical Contractor shall schedule testing of the electrical equipment and systems in accordance with the Contract Documents and the Program established by the Electrical Contractor and the Commissioning Manager. A detailed schedule shall be provided a minimum of four (4) weeks prior to the equipment or system being turned on. Schedule shall break down the testing into individual components, equipment, sub-systems and systems. The schedule shall provide adequate time for testing and commissioning of each system.

.3 During the testing of systems the Electrical Contractor shall make available skilled tradesmen to effect trouble shooting and effect repairs. During start-up and performance testing

same day repair and trouble shooting of equipment shall be provided.

.4 The Electrical Contractor shall conduct tests as detailed by the Electrical Contractor in the Installation, Performance, Start-Up and Integrated Systems test forms (IBS). The test forms shall be filled out by the Electrical Contractor and shall be witnessed by the Commissioning Manager.

.5 The Electrical Contractor shall document the results of all tests conducted during the construction and the post construction phase and shall fill out documentation in accordance with Commissioning Manager requirements.

.6 The Electrical Contractor shall ensure that Sub-Contractors' testing is performed and complete in accordance with the Electrical Contractor's requirements.

.6 Progress Payments:

.1 Set aside in billing breakdown funds for commissioning, testing, manuals, demonstration training, and all other commissioning activities.

.7 Sub-trades and Outside the Design Consultants:

.1 Understand quality

standards contained in the specifications and ensured by inspections, site visits and document revisions that they are being met by the Sub-Contractors.

.2 The Electrical Contractor shall keep records of their testing in accordance with Commissioning Manager’s requirements.

.8 Maintenance Manuals

.1 Assemble documentation; Manuals, Record drawings, commissioning forms, prior to turn over and training.

.2 Maintenance manuals shall be put together immediately upon completion of the submittal of shop drawings.

.3 All maintenance manuals shall be formatted as per PWGSC Standards – Commissioning Standard.

.4 Provide any information required to satisfy the requirements of and as requested by Design Consultant and the Commissioning Manager

.9 Building Turnover and Staff Training - Electrical Contractor:

.1 Arrange training sessions with the Design Consultant, Electrical Contractor and Commissioning Manager.

.2 Schedule clear interface between construction and Owner’ operation of equipment.

.3 Testing and turnover

procedures to be approved by the Design Consultant, Commissioning Manager and Commissioning Manager a minimum of sixty (60) days prior to the first test/system or equipment scheduled turnover.

.3 Commissioning Forms

.1 The Commissioning Manager will be generating the PI, installation, start-up, PV and integrated systems commissioning test forms that are to be completed by the Electrical Contractor.

1.4 INTEGRATED BUILDING SYSTEMS (IBS) PERFORMANCE TESTING

.1 If there is a requirement for detailed Simulated Performance Verification Testing of Integrated Systems. The detail of these simulated performance verification tests of integrated/interconnected systems will be developed during the construction period of the project. The Electrical Contractor will play a major part in supporting and participating in these simulated performance verification tests of integrated/interconnected systems.

.2 The integrated/interconnected systems performance tests are in addition to the Performance Verification Tests (PV).

.3 Integrated/interconnected performance testing will be completed as a minimum on the following integrated/Interconnected systems:

.1 As per electrical specifications

1.5 THE COMMISSIONING PROCESS

.1 The Commissioning process consists of the following:

.1 Processing and completion of Shop Drawings and Record Drawings.

.2 Installation inspection of all Electrical Equipment and completion of all associated Testing.

.3 Independent Testing Contractor’s participation and documentation.

.4 Performance Testing of Electrical

Equipment and Systems.

.5 Performance Testing of Integrated / Interconnected Systems.

.6 Participation in all Commissioning and Punch List Meetings.

.7 Participation in the Completion of Operating and Maintenance Manuals.

.8 Participation in the Completion of Systems Operating Manuals.

.9 Staff Operating Training.

.10 Preparation and Completion of all Commissioning Forms.

.11 Warranties.

.2 Shop Drawings and Record Drawings:

.1 Conform to Division 01 and 26 specification requirements for shop drawings submittals and record drawings.

.3 Installation Inspection and Equipment Verification / Checks:

.1 The Electrical Contractor shall coordinate with the Design Consultant, PWGSC Quality Assurance Authority, and the Commissioning Manager who will be inspecting the electrical installation.

.2 The Electrical Contractor shall notify the Commissioning Manager when each piece of equipment is ready for inspection for PI, installation, start up and performance verification (PV) testing. The Electrical Contractor shall provide a detailed schedule for each system, sub-system and each piece of equipment.

.3 The Electrical Contractor shall rectify any deficiencies found by the Commissioning Manager or Design Consultant during the commissioning process.

.4 Testing of Equipment and Systems:

.1 The Electrical Contractor shall be responsible for all tests detailed in the Contract Documents and those tests required by a

manufacturer as part of their installation requirements and as outlined by the Commissioning Manager. The Electrical Contractor shall be responsible for completing the PI, installation Start-up and Performance Test (PV) forms.

.2 The Electrical Contractor shall only utilize employees with previous experience in Testing Procedures as they relate to a particular subject.

.3 The Electrical Contractor shall inform the Design Consultant and the Commissioning Manager, in writing, who they intend to use along with a list of relevant experience and projects completed. The Design Consultant retains the right to accept or reject the proposed individual.

.4 The Electrical Contractor shall hire the manufacturers' technicians who will conduct required start-up and/or programming and testing on their equipment.

.5 The Electrical Contractor shall cooperate with the Independent Testing Electrical Contractor to provide assistance during the testing procedures.

.6 All performance tests shall be witnessed by the Electrical Contractor and Commissioning Manager. If tests are not witnessed and forms are signed, the tests shall be repeated at the Electrical Contractor's expense.

.7 Commissioning Meetings and Reporting:

.1 The Electrical Contractor shall include the schedule for all tests in the Construction Schedule.

.2 The Commissioning meetings will be held as separate meetings from the regular construction meetings. The

testing schedules and the results of all tests shall be reviewed.

.8 All testing forms and reports associated with the electrical systems shall be directed to the General Contractor with copies to the Design Consultant, Commissioning Manager and PWGSC Project Manager.

.9 The forms and reports to be issued shall include:

.1 Shop drawings

.2 Completed Equipment Product Information (PI) Forms.

.3 Completed Installation Check Lists (ICL).

.4 Completed Performance Verification (PV) Test Forms.

.5 Completed Integrated System Test Forms.

.6 Reports resulting from tests.

.7 Testing Schedule.

.8 Manufacturers’ Certificates, Verification and Test results.

.9 Operating and Maintenance Manuals

.5 Staff and Operator Training:

.1 The Electrical Contractor and equipment manufacturers shall provide operator training for each system and its associated equipment.

.2 The training shall be provided by qualified technicians or electricians and shall be conducted in a classroom and at the equipment or system.

.3 The training sessions shall be scheduled, coordinated and videotaped by the General Contractor and turned over to the Commissioning Manager.

.4 Each training session shall be structured to cover the following:

.1 Operating and Maintenance

Manual.

.2 Operating Procedures.

.3 Maintenance Procedures.

.4 Trouble-shooting Procedures.

.5 The manufacturers or service representatives name, address and phone number.

.6 Submit a course outline to the PWGSC Project Manager, the Design Consultant, and the Commissioning Manager before training commences. Provide course documentation for up to ten (10) people.

.6 System Demonstration and Building Turnover:

.1 The system demonstration and building turnover to Owner’s staff shall occur when:

.1 The installation is complete.

.2 The acceptance test conducted by the Electrical Contractor and the Design Consultant has been 100% completed successfully.

.3 Training has been completed.

.2 Equipment Operating and Maintenance Manuals have been accepted:

.1 Shop-drawings have been updated.

.2 Record drawings have been 100% completed.

.3 The Commissioning process has been 100% completed successfully and the system operation accepted by the Electrical Contractor.

.4 The Deficiency Punch Lists have been completed in their entirety.

.3 The systems demonstration shall be conducted by the Electrical Contractor and manufacturers. The demonstration shall cover all operational and maintenance requirements and a physical demonstration of equipment

installation and operation.

.7 Test Forms:

.1 The Electrical Contractor and manufacturers shall fill out the forms prepared by the Commissioning Manager during PI, installation, start-up and PV testing.

.2 The Commissioning Index of Forms shall be maintained by the Electrical Contractor in order to track the progress of the Commissioning Process.

.8 Warranties:

.1 Equipment and system warranties shall not begin until the system demonstration and turnover has been conducted successfully and accepted by the Commissioning Manager. The Electrical Contractor shall fill out the Warranty Form(s) listing the equipment and systems and the start and finishing dates for the Warranty period.

.2 Refer to the Specifications for the requirements during the Warranty period.

.3 The Commissioning Manager, the Design Consultants and the Electrical Contractor shall review the performance of the systems. If the performance is satisfactory, then no further action needs to be taken. If unsatisfactory, then the Electrical Contractor will be instructed to correct all deficiencies, at his cost, to the satisfaction of the three parties.

.9 Commissioning Phases One to Six:

.1 Commissioning process spans various phases:

.1 Commissioning Phase 1

.1 The planning phase, where the risks, uncertainties and vulnerabilities are assessed.

.2 Establishes the extent of commissioning, time and budget for commissioning.

.3 Occurs during project at start of Contract Documents.

.2 Commissioning Phase 2

.1 Establishes technical requirements such as test requirements and standards.

.2 Finalization of single-line schematic diagram for electrical distribution.

.3 Occurs during latter stage of Contract Documents.

.3 Commissioning Phase 3

.1 The implementation phase where documentation for commissioning is developed.

.2 Electrical Contractor should have made available all finalized shop drawings.

.3 The quality and extent of commissioning is determined and finalized in agreement with the client.

.4 A master index is developed with all elements of the electrical systems.

.5 Commissioning forms such as PI, installation, start-up and PV Test Forms are developed in this phase.

.6 Occurs early in the Contract Administration Stage.

.4 Commissioning Phase 4

.1 The verification and commissioning before the equipment is turned over to Owner.

.2 All equipment received is checked against approved PI, installation, start-up and PV Test Forms.

.3 It is important to check in this phase that the equipment received has gone through the

necessary factory tests.

.4 A Design Consultant would have witnessed some of the factory tests carried out to ensure that the tests are conducted in accordance with the required standards.

.5 Start-up and operation instructions received from the equipment manufacturers are reviewed in this phase.

.6 All deficiencies are reported to the Electrical Contractor and rectified before equipment is turned over to Owner for beneficial use.

.7 Occurs later on in the Contract Administration phase.

.5 Commissioning Phase 5

.1 The performance verification of the complete electrical system functionally integrated with all the other systems in operation within the facility.

.2 Optimization, fine-tuning and post-occupancy commissioning is done in this phase.

.3 Occurs later on in the Contract Administration phase.

.6 Commissioning Phase 6

.1 Final Commissioning Report is submitted to the Design Consultant for review by the Commissioning Manager.

.2 The PWGSC Design and Quality Assurance Authority and PWGSC Project Manager review and accept the Final Commissioning Report on behalf of the Owner.

.10 Framework:

.1 All equipment in the electrical system is grouped into systems and sub-systems for commissioning purposes. Documentation for PI,

installation, start-up and PV will encompass all equipment given in the following framework.

.11 Documentation Guidelines:

.1 The Electrical Contractor completing the PI, installation, startup and PV test forms shall follow a consistent approach. Good documentation practice is essential in realizing the objectives of commissioning and to keep track of all commissioning related activities.

.12 Documentation shall be:

.1 Completed in permanent black ink only.

.2 Legible - can be easily read.

.3 Accurate - all information is correct.

.4 Timely - done at the appropriate time.

.5 Clear - can be understood by anyone who reads it.

.6 Consistent - done the same way each time.

.7 Complete - all required entries are made.

.8 Factual - what is written shall be what actually occurred.

.13 Correcting Mistakes: When mistakes are made accidentally while documenting, there shall be a standard way to correct the mistakes. Correct notation for documenting an entry error is to note Entry Error. Steps to follow:

.1 Cross out the error with a single line.

.2 Write the correct entry above the incorrect entry.

.3 Initial the correction.

.14 Before passing on the documentation, it shall be checked to make sure that it is timely, accurate, permanent, legible, complete, clear, consistent and factual.

.15 Submitted documentation which has not been reviewed will be rejected in its entirety by

the Design Consultant.

.16 Roles and Responsibilities:

.1 Activities, roles and responsibilities are clearly defined in commissioning plans. Commissioning activities, coordinated with all other activities in the project, will optimize the benefits of commissioning. The participants in commissioning activities have the roles and responsibilities, as given in the following Table.

Part 2 PRODUCTS

2.1 NOT USED .1 NOT USED

Part 3 EXECUTION

3.1 NOT USED .1 NOT USED

END OF SECTION

Part 1 GENERAL

1.1 RELATED REQUIREMENTS

.1 Section 26 05 00 Common Works Results for Electrical.

1.2 REFERENCES

.1 CSA International

.1 CAN/CSA-C22.2 No.18-.2-06 (R2011), Non-metallic outlet boxes.

.2 CAN/CSA-C22.2 No.65-13(R2013), Wire Connectors (Tri-National Standard with UL 486A-486B and NMX-J-543-ANCE-03).

.2 Electrical and Electronic Manufacturers' Association of Canada (EEMAC)

.1 EEMAC 1Y-2-1961, Bushing Stud Connectors and Aluminum Adapters (1200 Ampere Maximum Rating).

.3 National Electrical Manufacturers Association (NEMA)

1.3 ACTION AND INFORMATIONAL SUBMITTALS

.1 Submit in accordance with Section 01 33 00 - Submittal Procedures.

.2 Product Data:

.1 Submit manufacturer's instructions, printed product literature and data sheets for wire and box connectors and include product characteristics, performance criteria, physical size, finish and limitations.

1.4 CLOSEOUT SUBMITTALS

.1 Submit in accordance with Section 01 78 00 - Closeout Submittals.

.2 Operation and Maintenance Data: submit operation and maintenance data for wire and box connectors for incorporation into manual.

1.5 DELIVERY, STORAGE AND HANDLING

.1 Deliver, store and handle materials in accordance with Section 01 61 00 - Common Product Requirements with manufacturer's written instructions.

Part 2 Products

2.1 MATERIALS

.1 Pressure type wire connectors to: CAN/CSA-C22.2 No.65, with current carrying parts of copper sized to fit copper conductors as required.

.2 Fixture type splicing connectors to: CAN/CSA-C22.2 No.65, with current carrying parts of copper sized to fit copper conductors 10 AWG or less.

.3 Bushing stud connectors: to NEMA to consist of:

.1 Connector body and stud clamp for stranded copper conductors.

.2 Clamp for stranded copper conductors.

.3 Stud clamp bolts.

.4 Bolts for copper conductors.

.5 Sized for conductors as indicated.

.4 Clamps or connectors for armoured cable, TECK cable, mineral insulated cable, flexible conduit, non-metallic sheathed cable as required to: CAN/CSA-C22.2 No.18.

Part 3 EXECUTION

3.1 EXAMINATION

.1 Verification of Conditions: verify that conditions of substrate previously installed under other Sections or Contracts are acceptable for wire and box connectors installation in accordance with manufacturer's written instructions.

.1 Visually inspect substrate in presence of Departmental Representative.

.2 Inform Departmental Representative of unacceptable conditions immediately upon discovery.

.3 Proceed with installation only after unacceptable conditions have been remedied and after receipt of written approval to proceed from Departmental Representative.

3.2 INSTALLATION

.1 Remove insulation carefully from ends of conductors and:

.1 Apply coat of zinc joint compound on aluminum conductors prior to installation of connectors.

.2 Install mechanical pressure type connectors and tighten screws with appropriate compression tool recommended by manufacturer. Installation shall meet secureness tests in accordance with CAN/CSA-C22.2 No.65.

.3 Install fixture type connectors and tighten to CAN/CSA-C22.2 No.65. Replace insulating cap.

.4 Install bushing stud connectors in accordance with EEMAC 1Y-2 NEMA.

3.3 CLEANING

.1 Progress Cleaning: clean in accordance with Section 01 74 11 - Cleaning.

.1 Leave Work area clean at end of each day.

END OF SECTION

Part 1 GENERAL

1.1 RELATED REQUIREMENTS

.1 Section 26 05 00 Common Works Results for Electrical.

1.2 PRODUCT DATA

.1 Provide product data in accordance with Section 01 33 00 - Submittal Procedures.

1.3 DELIVERY, STORAGE AND HANDLING

.1 Packaging Waste Management: remove for reuse or return by manufacturer of pallets, crates, padding and packaging materials in accordance with Section 01 74 21 - Construction/Demolition Waste Management and Disposal.

Part 2 PRODUCTS

2.1 BUILDING WIRES

.1 Conductors: stranded for 10 AWG and larger. Minimum size: 12 AWG.

.2 Copper conductors: size as indicated, with 1000 V insulation of cross-linked thermosetting polyethylene material rated RW90 XLPE, RWU90 XLPE.

.3 Copper conductors: size as indicated, with thermoplastic insulation type TWU rated at 600 V.

2.2 TECK 90 CABLE

.1 Cable: in accordance with Section 26 05 00 - Common Work Results for Electrical.

.2 Conductors:

.1 Grounding conductor: copper.

.2 Circuit conductors: copper, size as indicated.

.3 Insulation:

.1 Cross-linked polyethylene XLPE.

.2 Rating: 1000 V.

.4 Inner jacket: polyvinyl chloride material.

.5 Armour: galvanized steel.

.6 Overall covering: thermoplastic polyvinyl chloride, compliant to applicable Building Code Classification for this project.

.7 Fastenings:

.1 One hole steel straps to secure surface cables 50 mm and smaller. Two hole steel straps for cables larger than 50 mm.

.2 Channel type supports for two or more cables at 600 mm centers.

.3 Threaded rods: 6 mm diameter to support suspended channels.

.8 Connectors:

.1 Watertight approved for TECK cable.

2.3 MINERAL-INSULATED CABLES

.1 Conductors: solid bare soft-annealed copper, size as indicated.

.2 Insulation: compressed powdered magnesium oxide or silicon dioxide to form compact homogeneous mass throughout entire length of cable.

.3 Outer covering: annealed seamless copper sheath, Type M1 rated 600 V, 250 degrees C.

.4 Overall jacket: none.

.5 Two hour fire rating.

.6 Connectors: watertight, field installed, and approved for MI cable.

.7 Termination kits: field installed, approved for MI cable.

2.4 ARMOURED CABLES

.1 Conductors: insulated, copper, size as indicated.

.2 Type: AC90.

.3 Armour: interlocking type fabricated from galvanized steel strip.

.4 Type: ACWU90 flame retardant jacket over thermoplastic armour and compliant to applicable Building Code classification for this project.

.5 Connectors: anti short connectors.

2.5 CONTROL CABLES

.1 Type: LVT: 2 soft annealed copper conductors, sized as indicated:

.1 Insulation: thermoplastic.

.2 Sheath : cotton braid thermoplastic jacket, and armour of closely wound aluminum wire.

.2 Type: low energy 300 V control cable: solid annealed copper conductors sized as indicated LVT: 2 soft annealed copper conductors, sized as indicated:

.1 Insulation: PVC TW 40 degrees C.

.2 Shielding: metallized tapes over conductors.

.3 Overall covering: PVC jackets.

Part 3 Execution

3.1 FIELD QUALITY CONTROL

.1 Perform tests in accordance with Section 26 05 00 - Common Work Results for Electrical.

.2 Perform tests using method appropriate to site conditions and to approval of Departmental Representative and local authority having jurisdiction over installation.

.3 Perform tests before energizing electrical system.

3.2 GENERAL CABLE INSTALLATION

.1 Install cable in trenches in accordance with Section 33 71 73.02 - Underground Electrical Service.

.2 Lay cable in cable trays in accordance with Section 26 05 36 - Cable Trays for Electrical Systems.

.3 Terminate cables in accordance with Section 26 05 20 - Wire and Box Connectors - (0-1000 V).

.4 Cable Colour Coding: to Section 26 05 00 - Common Work Results for Electrical.

.5 Conductor length for parallel feeders to be identical.

.6 Lace or clip groups of feeder cables at distribution centres, pull boxes, and termination points.

.7 Wiring in walls: typically drop or loop vertically from above to better facilitate future renovations. Generally wiring from below and horizontal wiring in walls to be avoided unless indicated.

.8 Branch circuit wiring for surge suppression receptacles and permanently wired computer and electronic equipment to be 2-wire circuits only, i.e. common neutrals not permitted.

.9 Provide numbered wire collars for control wiring. Numbers to correspond to control shop drawing legend. Obtain wiring diagram for control wiring.

3.3 INSTALLATION OF BUILDING WIRES

.1 Install wiring as follows:

.1 In conduit systems in accordance with Section 26 05 34 - Conduits, Conduit Fastenings and Conduit Fittings.

.2 In underground ducts in accordance with Section 33 65.73.

.3 In wireways and auxiliary gutters in accordance with Section 26 05 37.

3.4 INSTALLATION OF TECK90 CABLE (0 -1000 V)

.1 Group cables wherever possible on channels.

.2 Install cable exposed, securely supported by hangers.

3.5 INSTALLATION OF MINERAL-INSULATED CABLES

.1 Install cable exposed, securely supported by hangers.

.2 Support 2 hour fire rated cables at 1 m intervals.

.3 Make cable terminations by using factory-made kits.

.4 Cable terminations: use thermoplastic sleeving over bare conductors.

.5 Where cables are buried in cast concrete or masonry, sleeve for entry and exit of cables.

.6 Do not splice cables unless indicated.

3.6 INSTALLATION OF ARMOURED CABLES

.1 Group cables wherever possible on channels.

3.7 INSTALLATION OF ALUMINUM SHEATHED CABLE

.1 Group cables wherever possible on channels.

3.8 INSTALLATION OF CONTROL CABLES

.1 Install control cables in conduit.

.2 Ground control cable shield.

3.9 INSTALLATION OF NON-METALLIC SHEATHED CABLE

.1 Install cables.

.2 Install straps and box connectors to cables as required.

END OF SECTION

Part 1 GENERAL

1.1 RELATED REQUIREMENTS

.1 Section 26 05 31 Splitters, Junction, Pull Boxes and Cabinets.

.2 Section 26 05 00 Common Works Results for Electrical.

1.2 REFERENCES

.1 CSA Group

.1 CSA C22.1-15, Canadian Electrical Code, Part 1 (23rd Edition), Safety Standard for Electrical Installations.

.2 CSA C22.2 No.41-13, Grounding and Bonding Equipment (Tri-National Standard, with NMX-J-590ANCE and UL 467).

.3 CSA C22.2 No.65-13, Wire connectors (Tri-National Standard, with UL 486A-486B NMX-J-543-ANCE).

1.3 ACTION AND INFORMATIONAL SUBMITTALS

.1 Submit in accordance with Section 01 33 00 - Submittal Procedures.

.2 Product Data:

.1 Submit manufacturer's instructions, printed product literature and data sheets for connectors and terminations and include product characteristics, performance criteria, physical size, finish and limitations.

1.4 CLOSEOUT SUBMITTALS

.1 Submit in accordance with Section 01 78 00 - Closeout Submittals.

.2 Operation and Maintenance Data: submit operation and maintenance data for connectors and terminations for incorporation into manual.

1.5 DELIVERY, STORAGE AND HANDLING

.1 Deliver, store and handle materials in accordance with Section 01 61 00 - Common Product Requirements with manufacturer's written instructions.

Part 2 Products

2.1 CONNECTORS AND TERMINATIONS

.1 Copper long barrel compression connectors to CSA C22.2 No.65 as required sized for conductors.

.2 Contact aid for aluminum cables where applicable.

.3 2, 3 or 4 way joint boxes dry location type in accordance with Section 26 05 33 - Raceway and Boxes for Electrical Systems.

Part 3 Execution

3.1 EXAMINATION

.1 Verification of Conditions: verify that conditions of substrate previously installed under other Sections or Contracts are acceptable for connectors and terminations installation in accordance with manufacturer's written instructions.

.1 Visually inspect substrate in presence of Departmental Representative.

.2 Inform Departmental Representative of unacceptable conditions immediately upon discovery.

.3 Proceed with installation only after unacceptable conditions have been remedied and after receipt of written approval to proceed from Departmental Representative.

3.2 INSTALLATION

.1 Install stress cones, terminations, and splices in accordance with manufacturer's instructions.

.2 Bond and ground as required to CSA C22.2No.41.

3.3 CLEANING

.1 Progress Cleaning: clean in accordance with Section 01 74 11 - Cleaning.

.1 Leave Work area clean at end of each day.

END OF SECTION

Part 1 GENERAL

1.1 RELATED REQUIREMENTS

.1 Section 26 05 00 Common Works Results for Electrical.

1.2 WASTE MANAGEMENT AND DISPOSAL

.1 Separate and recycle waste materials in accordance with Section 01 74 21 - Construction/Demolition Waste Management and Disposal.

.2 Remove from site and dispose of all packaging materials at appropriate recycling facilities.

.3 Collect and separate for disposal paper, plastic, polystyrene, corrugated cardboard, and packaging material, in appropriate on-site bins for recycling in accordance with Waste Management Plan.

.4 Divert unused metal materials from landfill to metal recycling facility as approved by Departmental Representative.

.5 Fold up metal banding, flatten and place in designated area for recycling.

Part 2 PRODUCTS

2.1 SUPPORT CHANNELS

.1 U shape, size 41 x 41 mm, 2.5 mm thick, surface mounted or suspended.

Part 3 EXECUTION

3.1 INSTALLATION

.1 Secure equipment to hollow or solid masonry, tile and plaster surfaces with nylon shields.

.2 Secure equipment to poured concrete with expandable inserts.

.3 Secure equipment to hollow masonry walls or suspended ceilings with toggle bolts.

.4 Secure surface mounted equipment with twist clip fasteners to inverted T bar ceilings. Ensure that T bars are adequately supported to carry weight of equipment specified before

installation.

.5 Support equipment, conduit or cables using clips, spring loaded bolts, cable clamps designed as accessories to basic channel members.

.6 Fasten exposed conduit or cables to building construction or support system using straps.

.1 One-hole steel straps to secure surface conduits and cables 50 mm and smaller.

.2 Two-hole steel straps for conduits and cables larger than 50 mm.

.3 Beam clamps to secure conduit to exposed steel work.

.7 Suspended support systems.

.1 Support individual cable or conduit runs with 6 mm dia threaded rods and spring clips.

.2 Support 2 or more cables or conduits on channels supported by 6 mm dia threaded rod hangers where direct fastening to building construction is impractical.

.8 For surface mounting of two or more conduits use channels at 0.6 m on centre spacing.

.9 Provide metal brackets, frames, hangers, clamps and related types of support structures where indicated or as required to support conduit and cable runs.

.10 Ensure adequate support for raceways and cables dropped vertically to equipment where there is no wall support.

.11 Do not use wire lashing or perforated strap to support or secure raceways or cables.

.12 Do not use supports or equipment installed for other trades for conduit or cable support except with permission of other trade and approval of Departmental Representative.

.13 Install fastenings and supports as required for each type of equipment cables and conduits, and in accordance with manufacturer's installation recommendations.

END OF SECTION

Part 1 GENERAL

1.1 RELATED REQUIREMENTS

.1 Section 26 05 00 Common Works Results for Electrical.

1.2 REFERENCES

.1 Canadian Standards Association (CSA International)

.1 CSA C22.1-12, Canadian Electrical Code, Part 1, 21st Edition.

1.3 ACTION AND INFORMATIONAL SUBMITTALS

.1 Provide submittals in accordance with Section 01 33 00 - Submittal Procedures.

1.4 DELIVERY, STORAGE AND HANDLING

.1 Deliver, store and handle materials in accordance with Section 01 61 00 - Common Product Requirements with manufacturer's written instructions.

Part 2 PRODUCTS

2.1 SPLITTERS

.1 Construction: sheet metal enclosure, welded corners and formed hinged cover suitable for locking in closed position.

.2 Terminations: main and branch lugs to match required size and number of incoming and outgoing conductors as indicated.

.3 Spare Terminals: minimum three spare terminals or lugs on each connection or lug block sized less than 400 A.

.4 Sprinkler Proof.

2.2 JUNCTION AND PULL BOXES

.1 Construction: welded steel enclosure.

.2 Covers Flush Mounted: 25 mm minimum extension all around.

.3 Covers Surface Mounted: screw-on turned edge covers.

.4 Sprinkler Proof.

2.3 CABINETS

.1 Construction: welded sheet steel hinged door, handle, latch lock 2 keys and catch.

.2 Type E Empty: surface return flange flush overlapping sides mounting as indicated.

.3 Type T Terminal: surface return flange flush overlapping sides mounting as indicated containing sheet steel 19 mm plywood backboard.

.4 Sprinkler Proofed.

Part 3 EXECUTION

4.1 SPLITTER INSTALLATION

.1 Mount plumb, true and square to building lines.

.2 Extend splitters full length of equipment arrangement except where indicated otherwise.

4.2 JUNCTION, PULL BOXES AND CABINETS INSTALLATION

.1 Install pull boxes in inconspicuous but accessible locations.

.2 Mount cabinets with top not higher than 2 m above finished floor except where indicated otherwise.

.3 Install terminal block as indicated in Type T cabinets.

.4 Only main junction and pull boxes are indicated. Install additional pull boxes as required by CSA C22.1.

4.3 IDENTIFICATION

.1 Equipment Identification: to Section 26 05 00 - Common Work Results for Electrical.

.2 Identification Labels: size 2 indicating system name, voltage and phase or as indicated.

END OF SECTION

Part 1 GENERAL

1.1 RELATED REQUIREMENTS

.1 Section 26 05 00 Common Works Results for Electrical.

1.2 REFERENCES

.1 Canadian Standards Association (CSA International)

.1 CSA C22.1-12, Canadian Electrical Code, Part 1, 21st Edition.

1.3 ACTION AND INFORMATIONAL SUBMITTALS

.1 Provide submittals in accordance with Section 01 33 00 - Submittal Procedures.

.2 Submit samples for floor box in accordance with Section 01 33 00 - Submittal Procedures.

1.4 DELIVERY, STORAGE AND HANDLING

.1 Deliver, store and handle materials in accordance with Section 01 61 00 - Common Product Requirements.

Part 2 Products

2.1 OUTLET AND CONDUIT BOXES GENERAL

.1 Size boxes in accordance with CSA C22.1.

.2 102 mm square or larger outlet boxes as required.

.3 Gang boxes where wiring devices are grouped.

.4 Blank cover plates for boxes without wiring devices.

.5 347 V outlet boxes for 347 V switching devices.

.6 Combination boxes with barriers where outlets for more than one system are grouped.

2.2 GALVANIZED STEEL OUTLET BOXES

.1 One-piece electro-galvanized construction.

.2 Single and multi gang flush device boxes for flush installation, minimum size 76 x 50 x 38 mm or as indicated. 102 mm square outlet boxes when more than one conduit enters one side with extension and plaster rings as

required.

.3 Utility boxes for outlets connected to surface-mounted EMT conduit, minimum size 102 x 54 x 48 mm.

.4 102 mm square or octagonal outlet boxes for lighting fixture outlets.

.5 Extension and plaster rings for flush mounting devices in finished plaster tile walls.

2.3 MASONRY BOXES

.1 Electro-galvanized steel masonry single and multi gang boxes for devices flush mounted in exposed block walls.

2.4 CONCRETE BOXES

.1 Electro-galvanized sheet steel concrete type boxes for flush mount in concrete with matching extension and plaster rings as required.

2.5 FLOOR BOXES

.1 Concrete tight electro-galvanized sheet steel floor boxes with adjustable finishing rings to suit floor finish with brass faceplate. Device mounting plate to accommodate short or long ear duplex receptacles. Minimum depth: 73 mm for receptacles and communication outlets.

.2 Adjustable, watertight, concrete tight, cast floor boxes with openings drilled and tapped for 21 mm conduit. Minimum size: 73 mm deep.

2.6 CONDUIT BOXES

.1 Cast FS aluminum boxes with factory-threaded hubs and mounting feet for surface wiring of devices.

2.7 OUTLET BOXES FOR NON-METALLIC SHEATHED CABLE

.1 Electro-galvanized, sectional, screw ganging steel boxes, minimum size 76 x 50 x 63 mm with two double clamps to take non-metallic sheathed cables.

2.8 OUTLET BOXES FOR COMMUNICATIONS

.1 Double gauge minimum 100 x 100 x 54 mm deep flush mounted.

OUTLETS

.2 Equipped with 12.5 mm single gang plaster ring or raised adapter.

.3 Plaster ring or raised adapter shall not reduce the size of the outlet such that two additional outlets cannot be added in the future.

2.9 FITTINGS - GENERAL

.1 Bushing and connectors with nylon insulated throats.

.2 Knock-out fillers to prevent entry of debris.

.3 Conduit outlet bodies for conduit up to 35 mm and pull boxes for larger conduits.

.4 Double locknuts and insulated bushings on sheet metal boxes.

2.10 SERVICE FITTINGS

.1 'High tension' receptacle fitting made of 2 piece stainless steel with brushed aluminum housing finish for 1 duplex receptacles. Bottom plate with two knockouts for centered or offset installation. 12 x 102 mm extension piece as indicated.

.2 Pedestal type 'low tension' fitting made of 2 piece stainless steel with brushed aluminum housing finish to accommodate two amphenol jack connectors.

Part 3 EXECUTION

3.1 INSTALLATION

.1 Support boxes independently of connecting conduits.

.2 Fill boxes with paper, sponges or foam or similar approved material to prevent entry of debris during construction. Remove upon completion of work.

.3 For flush installations mount outlets flush with finished wall using plaster rings to permit wall finish to come within 6 mm of opening.

.4 Provide correct size of openings in boxes for conduit, mineral insulated and armoured cable connections. Do not install reducing washers.

.5 Vacuum clean interior of outlet boxes before installation of wiring devices.

.6 Identify systems for outlet boxes as required.

.7 Provide circuit ID on each junction box cover.

END OF SECTION

Part 1 GENERAL

1.1 RELATED REQUIREMENTS

.1 Section 26 05 00 Common Works Results for Electrical.

1.2 REFERENCES

.1 Canadian Standards Association (CSA International)

.1 CAN/CSA-C22.2 No. 62-93(R2003), Surface Raceway Systems.

1.3 ACTION AND INFORMATIONAL SUBMITTALS

.1 Provide submittals in accordance with Section 01 33 00 - Submittal Procedures.

1.4 DELIVERY, STORAGE AND HANDLING

.1 Deliver, store and handle materials in accordance with Section 01 61 00 - Common Product Requirements with manufacturer's written instructions.

Part 2 Products

2.1 SURFACE RACEWAY SYSTEM (WIRING PULLED IN)

.1 One piece steel, free of sharp edges to CAN/CSA-C22.2 No. 62.

.2 Corners, pull boxes, elbows, tees, two piece assembly to facilitate site wiring.

.3 Finish: ivory enamel.

.4 Switch, receptacle, extension boxes, adapters and fittings required for complete installation.

2.2 SURFACE RACEWAY SYSTEM (WIRING LAID IN)

.1 Two piece steel assembly CAN/CSA-C22.2 No. 62.

.1 Finish: ivory enamel.

.2 Switch, receptacle, extension boxes, adapters and fittings required for complete installation.

2.3 SURFACE FLOOR RACEWAY SYSTEM

.1 Two piece steel assembly manufactured for floor lay-in type raceway to CAN/CSA-C22.2

No. 62.

.2 Finish: ivory enamel.

2.4 CHANNEL RACEWAY

.1 Channel type raceway: to CAN/CSA-C22.2 No. 62, steel, solid.

2.5 PLASTIC RACEWAY

.1 Plastic raceway: to CAN/CSA-C22.2 No. 62, reinforced thermosetting plastic with slots on either side of raceway for exit of wiring.

.2 Channel: with solid snap-on cover throughout entire length.

2.6 LIGHTING FIXTURE RACEWAY

.1 Fluorescent fixture support system using channel type raceway with snap-on cover.

.2 Channel: minimum 1.6 mm thick.

.3 Clamp hangers with threaded rod, rod hangers.

2.7 FITTINGS

.1 Elbows, tees, supports, connectors couplings and fittings: to CAN/CSA-C22.2 No. 62.

Part 3 EXECUTION

3.1 INSTALLATION

.1 Install raceway systems as indicated and in accordance with manufacturer's instructions.

.2 Install supports, elbows, tees, connectors, fittings, bushings, adaptors as required.

.3 Keep number of elbows, offsets and connections to minimum.

.4 Use wiring with mechanical protection in channel raceways.

.5 Install barriers in raceways for different services where required by code.

.6 Install wiring after installation of raceway system is complete.

END OF SECTION

Part 1 GENERAL

1.1 RELATED REQUIREMENTS

.1 Section 26 05 00 Common Works Results for Electrical.

1.2 REFERENCES

.1 Canadian Standards Association (CSA International)

.1 CAN/CSA C22.2 No. 18-98(R2003), Outlet Boxes, Conduit Boxes, Fittings and Associated Hardware, A National Standard of Canada.

.2 CSA C22.2 No. 45-M1.07 (R2012) and CSA C22.2 No.45.2-08(R2013), Rigid Metal Conduit.

.3 CSA C22.2 No. 56-04, Flexible Metal Conduit and Liquid-Tight Flexible Metal Conduit.

.4 CSA C22.2 No. 83-M1985(R2003), Electrical Metallic Tubing.

.5 CSA C22.2 No. 211.2-M1984(R2003), Rigid PVC (Unplasticized) Conduit.

.6 CAN/CSA C22.2 No. 227.3-05, Nonmetallic Mechanical Protection Tubing (NMPT), A National Standard of Canada (February 2006).

.7 CAS C18.3.12 (conduit tubes and cable fittings.)

1.3 ACTION AND INFORMATIONAL SUBMITTALS

.1 Provide submittals in accordance with Section 01 33 00 - Submittal Procedures.

Part 2 PRODUCTS

2.1 CABLES AND REELS

.1 Provide cables on reels or coils.

.1 Mark or tag each cable and outside of each reel or coil, to indicate cable length, voltage rating, conductor size, and manufacturer's lot number and reel number.

.2 Each coil or reel of cable to contain only one continuous cable without splices.

.3 Identify cables for exclusively dc

applications.

.4 Reel and mark shielded cables rated 2,001 volts and above.

2.2 CONDUITS

.1 Rigid metal conduit: to CSA C22.2 No. 45, galvanized steel threaded.

.2 Epoxy coated conduit: to CSA C22.2 No. 45, with zinc coating and corrosion resistant epoxy finish inside and outside.

.3 Electrical metallic tubing (EMT): to CSA C22.2 No. 83, with couplings and with expanded ends.

.4 Rigid pvc conduit: to CSA C22.2 No. 211.2.

.5 Flexible metal conduit: to CSA C22.2 No. 56, liquid-tight flexible metal.

2.3 CONDUIT FASTENINGS

.1 One hole steel straps to secure surface conduits 50 mm and smaller.

.1 Two hole steel straps for conduits larger than 50 mm.

.2 Beam clamps to secure conduits to exposed steel work.

.3 Channel type supports for two or more conduits at 0.6 m on centre.

.4 Threaded rods, 6 mm diameter, to support suspended channels.

2.4 CONDUIT FITTINGS

.1 Fittings: to CAN/CSA C22.2 No. 18, manufactured for use with conduit specified. Coating: same as conduit.

.2 Ensure factory "ells" where 90 degrees bends for 25 mm and larger conduits.

.3 Watertight connectors and couplings for EMT.

.1 Set-screws are not acceptable.

2.5 EXPANSION FITTINGS FOR RIGID CONDUIT

.1 Weatherproof expansion fittings with internal bonding assembly suitable for 100 mm linear expansion.

.2 Watertight expansion fittings with integral bonding jumper suitable for linear expansion and 19 mm deflection.

.3 Weatherproof expansion fittings for linear

expansion at entry to panel.

2.6 FISH CORD

.1 Polypropylene.

Part 3 EXECUTION

3.1 MANUFACTURER 'S INSTRUCTIONS

.1 Compliance: comply with manufacturer's written recommendations or specifications, including product technical bulletins, handling, storage and installation instructions, and datasheets.

3.2 INSTALLATION

.1 Install conduits to conserve headroom in exposed locations and cause minimum interference in spaces through which they pass.

.2 Conceal conduits except in mechanical and electrical service rooms and in unfinished areas.

.3 Use rigid galvanized steel threaded conduit except where specified otherwise.

.4 Use electrical metallic tubing (EMT) above 2.4 m not subject to mechanical injury and in all office areas.

.5 Use rigid pvc conduit underground.

.6 Use flexible metal conduit for connection to motors in dry areas, connection to surface or recessed fluorescent fixtures.

.7 Use liquid tight flexible metal conduit for connection to motors or vibrating equipment in damp, wet or corrosive locations.

.8 Use explosion proof flexible connection for connection to explosion proof motors.

.9 Install conduit sealing fittings in hazardous areas.

.1 Fill with compound.

.10 Minimum conduit size for lighting and power circuits: 19 mm.

.11 Bend conduit cold:

.1 Replace conduit if kinked or flattened more than 1/10th of its original diameter.

.12 Mechanically bend steel conduit over 19 mm diameter.

.13 Field threads on rigid conduit must be of sufficient length to draw conduits up tight.

.14 Install fish cord in empty conduits.

.15 Run 2-25 mm spare conduits up to ceiling space and 2-25 mm spare conduits down to ceiling space from each flush panel.

.1 Terminate these conduits in 152 x 152 x 102 mm junction boxes in ceiling space or in case of an exposed concrete slab, terminate each conduit in surface type box.

.16 Remove and replace blocked conduit sections.

.1 Do not use liquids to clean out conduits.

.17 Dry conduits out before installing wire.

.18 Provide a separate green ground wire in all conduit.

3.3 SURFACE CONDUITS

.1 Run parallel or perpendicular to building lines.

.2 Locate conduits behind infrared or gas fired heaters with 1.5 m clearance.

.3 Run conduits in flanged portion of structural steel.

.4 Group conduits wherever possible on suspended or surface channels.

.5 Do not pass conduits through structural members except as indicated.

.6 Do not locate conduits less than 75 mm parallel to steam or hot water lines with minimum of 25 mm at crossovers.

3.4 CONCEALED CONDUITS

.1 Run parallel or perpendicular to building lines.

.2 Do not install horizontal runs in masonry walls.

.3 Do not install conduits in terrazzo or concrete toppings.

3.5 CONDUITS IN CAST-IN-PLACE CONCRETE

.1 Locate to suit reinforcing steel.

.1 Install in centre one third of slab.

.2 Protect conduits from damage where they stub out of concrete.

.3 Install sleeves where conduits pass through slab or wall.

.4 Provide oversized sleeve for conduits passing through waterproof membrane, before membrane is installed.

.1 Use cold mastic between sleeve and conduit.

.5 Conduits in slabs: minimum slab thickness 4 times conduit diameter.

.6 Encase conduits completely in concrete with minimum 25 mm concrete cover.

.7 Organize conduits in slab to minimize cross-overs.

3.6 CONDUITS IN CAST-IN-PLACE SLABS ON GRADE

.1 Run conduits 25 mm and larger below slab and encase in 75 mm concrete envelope.

.1 Provide 50 mm of sand over concrete envelope below floor slab.

3.7 CONDUITS UNDERGROUND

.1 Slope conduits to provide drainage.

.2 Waterproof joints (pvc excepted) with heavy coat of bituminous paint.

3.8 CLEANING

.1 Proceed in accordance with Section 01 74 11 - Cleaning.

.2 On completion and verification of performance of installation, remove surplus materials, excess materials, rubbish, tools and equipment.

END OF SECTION

Part 1 GENERAL

1.1 RELATED REQUIREMENTS

.1 Section 26 05 00 Common Works Results for Electrical.

1.2 REFERENCES

.1 CSA International

.1 CSA C22.2 No.26-1952(R2009), Construction and Test of Wireways, Auxiliary Gutters and Associated Fittings.

1.3 ACTION AND INFORMATIONAL SUBMITTALS

.1 Submit in accordance with Section 01 33 00 - Submittal Procedures.

1.4 CLOSEOUT SUBMITTALS

.1 Submit in accordance with Section 01 78 00 - Closeout Submittals.

.2 Operation and Maintenance Data: submit operation and maintenance data for wireways and auxiliary gutters for incorporation into manual.

1.5 DELIVERY, STORAGE AND HANDLING

.1 Deliver, store and handle materials in accordance with Section 01 61 00 - Common Product Requirements with manufacturer's written instructions.

Part 2 PRODUCTS

2.1 WIREWAYS

.1 Wireways and fittings: to CSA C22.2 No.26.

.2 Sheet steel with hinged cover to give uninterrupted access.

.3 Finish: baked grey enamel in accordance with Section 26 05 00 - Common Work Results for Electrical.

.4 Elbows, tees, couplings and hanger fittings manufactured as accessories to wireway supplied.

Part 3 EXECUTION

3.1 EXAMINATION

.1 Verification of Conditions: verify that conditions of substrate previously installed under other Sections or Contracts are acceptable for wireways and auxiliary gutters installation in accordance with manufacturer's written instructions.

.1 Visually inspect substrate in presence of Departmental Representative.

.2 Inform Departmental Representative of unacceptable conditions immediately upon discovery.

.3 Proceed with installation only after unacceptable conditions have been remedied and after receipt of written approval to proceed from Departmental Representative.

3.2 INSTALLATION

.1 Install wireways and auxiliary gutters in accordance with manufacturer's written recommendations.

.2 Keep number of elbows, offsets, connections to minimum.

.3 Install supports, elbows, tees, connectors, fittings.

.4 Install barriers where required.

.5 Install gutter to full length of equipment.

.6 Ground metallic wireways and gutters as required.

3.3 CLEANING

.1 Progress Cleaning: clean in accordance with Section 01 74 11 - Cleaning.

.1 Leave Work area clean at end of each day.

END OF SECTION

Part 1 GENERAL

1.1 RELATED REQUIREMENTS

.1 Section 26 05 00 Common Works Results for Electrical.

1.2 REFERENCES

.1 Canadian Standards Association (CSA International)

.1 CSA C22.2 No. 100-04, Motors and Generators.

.2 CSA C22.2 No. 145-M1986(R2004), Motors and Generators for Use in Hazardous Locations.

.2 Electrical and Electronic Manufacturers' Association of Canada (EEMAC)

.1 EEMAC M1-7-1992, Standard for Motors and Generators.

1.3 ACTION AND INFORMATIONAL SUBMITTALS

.1 Submittals: in accordance with Section 01 33 00 - Submittal Procedures.

1.4 WASTE MANAGEMENT AND DISPOSAL

.1 Separate waste materials for reuse or recycling in accordance with Section 01 74 21 - Construction/Demolition Waste Management and Disposal.

.2 Collect, package and store expired motors for either recycling or rebuilding and return to recycler or rebuilder.

Part 2 PRODUCTS

2.1 FRACTIONAL HORSEPOWER MOTOR

.1 Non-hazardous locations: to CSA C22.2 No. 100 EEMAC M1-7.

.2 Motor with inherent overheating protectors.

Part 3 EXECUTION

3.1 MANUFACTURER 'S INSTRUCTIONS

.1 Compliance: comply with manufacturer's written recommendations or specifications, including product technical bulletins,

handling, storage and installation instructions, and datasheets.

3.2 INSTALLATION

.1 Install wiring, flexible connections and grounding.

.2 Check rotation before coupling to driven equipment.

3.3 CLEANING

.1 Proceed in accordance with Section 01 74 11 - Cleaning.

.2 On completion and verification of performance of installation, remove surplus materials, excess materials, rubbish, tools and equipment.

END OF SECTION

Part 1 GENERAL

1.1 RELATED REQUIREMENTS

.1 Section 26 05 00 Common Works Results for Electrical.

.2 CSA International
- .1 CAN/CSA-C22.2 No.47-M90(R2007), Air-Cooled Transformers (Dry Type).
- .2 CSA C9-02(R2007), Dry-Type Transformers.
- .3 CAN/CSA-C802.2-06, Minimum Efficiency Values for Dry Type Transformers.

.3 National Electrical Manufacturers Association (NEMA)

1.2 REFERENCES

.1 Canada Green Building Council (CaGBC)

.2 CSA International
- .1 CAN/CSA-C22.2 No.47-M90(R2007), Air-Cooled Transformers (Dry Type).
- .2 CSA C9-02(R2007), Dry-Type Transformers.
- .3 CAN/CSA-C802.2-06, Minimum Efficiency Values for Dry Type Transformers.

.3 National Electrical Manufacturers Association (NEMA)

1.3 ACTION AND INFORMATIONAL SUBMITTALS

.1 Submit in accordance with Section 01 33 00 - Submittal Procedures.

1.4 CLOSEOUT SUBMITTALS

.1 Submit in accordance with Section 01 78 00 - Closeout Submittals.

.2 Operation and Maintenance Data: submit operation and maintenance data for dry type transformers for incorporation into manual.

1.5 DELIVERY, STORAGE AND HANDLING

.1 Deliver, store and handle materials in accordance with Section 01 61 00 - Common Product Requirements with manufacturer's written instructions.

Part 2 PRODUCTS

2.1 DESIGN DESCRIPTION

.1 Design 1
- .1 Type: ANN.
- .2 Single 3 phase, kVA, as detailed on the drawings, 600 V input, 120/208 output, 60 Hz.
- .3 Voltage taps: standard.
- .4 Insulation: Class 220 degrees C temperature rise.
- .5 Basic Impulse Level (BIL): standard.
- .6 Hipot: standard.

.7 Average sound level: standard.
.8 Impedance at 17 degrees C: standard.
.9 Enclosure: NEMA and CSA, removable metal front panel.
.10 Mounting: floor or wall, as detailed on drawing.
.11 Finish: in accordance with Section 26 05 00 - Common Work Results for Electrical.
.12 Copper windings.
.13 Winding configuration to be as noted on drawings.
.14 Voltage Regulation to be 4% or better.
.15 Sprinklerproof.

2.2 EQUIPMENT IDENTIFICATION

.1 Provide equipment identification in accordance with Section 26 05 00 - Common Work Results for Electrical.
.2 Label size: 7.

Part 3 EXECUTION

3.1 EXAMINATION

.1 Verification of Conditions: verify that conditions of substrate previously installed under other Sections or Contracts are acceptable for dry type transformers installation in accordance with manufacturer's written instructions.
.1 Visually inspect substrate in presence of Departmental Representative.
.2 Inform Departmental Representative of unacceptable conditions immediately upon discovery.
.3 Proceed with installation only after unacceptable conditions have been remedied and after receipt of written approval to proceed from Departmental Representative.

3.2 INSTALLATION

.1 Mount dry type transformers up to 75 kVA as indicated.
.2 Mount dry type transformers above 75 kVA on floor.
.3 Ensure adequate clearance around transformer for ventilation.
.4 Install transformers in level upright position.
.5 Remove shipping supports only after transformer is installed and just before putting into service.

.6 Loosen isolation pad bolts until no compression is visible.

.7 Make primary and secondary connections in accordance with wiring diagram.

.8 Energize transformers after installation is complete.

.9 Make conduit entry into bottom 1/3 of transformer enclosure.

3.3 CLEANING

.1 Progress Cleaning: clean in accordance with Section 01 74 11 - Cleaning.

.1 Leave Work area clean at end of each day.

.2 Final Cleaning: upon completion remove surplus materials, rubbish, tools and equipment in accordance with Section 01 74 11 - Cleaning.

.3 Waste Management: separate waste materials for reuse or recycling in accordance with Section 01 74 21 - Construction/Demolition Waste Management and Disposal 01 35 21 - LEED Requirements.

.1 Remove recycling containers and bins from site and dispose of materials at appropriate facility.

3.4 PROTECTION

.1 Protect installed products and components from damage during construction.

.2 Repair damage to adjacent materials caused by dry type transformers installation.

END OF SECTION

Part 1 GENERAL

1.1 RELATED REQUIREMENTS

.1 Section 26 05 00 Common Works Results for Electrical.

1.2 REFERENCES

.1 CSA International

.1 CSA C22.2 No.29-11, Panelboards and Enclosed Panelboards.

1.3 ACTION AND INFORMATIONAL SUBMITTALS

.1 Submit in accordance with Section 01 33 00 - Submittal Procedures.

1.4 CLOSEOUT SUBMITTALS

.1 Submit in accordance with Section 01 78 00 - Closeout Submittals.

.2 Operation and Maintenance Data: submit operation and maintenance data for panelboards for incorporation into manual.

1.5 DELIVERY, STORAGE AND HANDLING

.1 Deliver, store and handle materials in accordance with Section 01 61 00 - Common Product Requirements with manufacturer's written instructions.

.2 Delivery and Acceptance Requirements: deliver materials to site in original factory packaging, labelled with manufacturer's name and address.

.3 Storage and Handling Requirements:

.1 Store materials off ground, indoors, in dry location and in accordance with manufacturer's recommendations in clean, dry, well-ventilated area.

.2 Store and protect panelboards from nicks, scratches, and blemishes.

.3 Replace defective or damaged materials with new.

.4 Develop Construction Waste Management Plan and Waste Reduction Workplan related to Work of this Section and in accordance with Section 01 35 21 - LEED Requirements.

.5 Packaging Waste Management: remove for reuse and return by manufacturer of pallets,

crates, padding, packaging materials as specified in Construction Waste Management Plan and Waste Reduction Workplan in accordance with Section 01 74 21 - Construction/Demolition Waste Management and Disposal Section 01 35 21 - LEED Requirements.

Part 2 PRODUCTS

2.1 PANELBOARDS

.1 Panelboards: to CSA C22.2 No.29 and product of one manufacturer. Eaton, Siemens or Schneider.

.1 Install circuit breakers in panelboards before shipment.

.2 In addition to CSA requirements manufacturer's nameplate must show fault current that panel including breakers has been built to withstand.

.2 250 or 600 V panelboards: bus and breakers rated for interrupting capacity as indicated.

.3 Sequence phase bussing with odd numbered breakers on left and even on right, with each breaker identified by permanent number identification as to circuit number and phase.

.4 Panelboards: mains, number of circuits, and number and size of branch circuit breakers as indicated.

.5 Minimum of 2 flush locks for each panel board.

.6 Two keys for each panelboard and key panelboards alike.

.7 Copper bus with neutral of double ampere rating of mains.

.8 Mains and branch breakers suitable for bolt-on breakers.

.9 Trim with concealed front bolts and hinges.

.10 Trim and door finish: baked enamel as per colour schedule.

.11 Isolated ground bus.

.12 Include grounding busbar with 3 of terminals for bonding conductor equal to breaker capacity of the panel board.

.13 Sprinklerproof.

2.2 BREAKERS

.1 Breakers: to Section[26 28 16.02 - Moulded Case Circuit Breakers.

.2 Breakers with thermal and magnetic tripping in panelboards except as indicated otherwise.

.3 Main breaker: separately mounted on top or bottom of panel to suit cable entry. When mounted vertically, down position should open breaker.

.4 Lock-on devices for 10% of 15 to 30 A breakers installed as indicated. Turn over unused lock-on devices to Departmental Representative.

.5 Lock-on devices for fire alarm, emergency, exit and night light circuits.

.6 All panelboards shall have a minimum of 20% spare breakers pf each breaker size and a minimum 20% space for future breakers.

2.3 EQUIPMENT IDENTIFICATION

.1 Provide equipment identification in accordance with Section 26 05 00 - Common Work Results for Electrical.

.2 Nameplate for each panelboard size 4 engraved as indicated.

.3 Nameplate for each circuit in distribution panelboards size 2 engraved as indicated.

.4 Complete circuit directory with typewritten legend showing location and load of each circuit, mounted in plastic envelope at inside of panel door.

.5 Circuits supplying Patient Care Areas must be entered in circuit directory with Bold Font.

Part 3 EXECUTION

3.1 EXAMINATION

.1 Verification of Conditions: verify that conditions of substrate previously installed

under other Sections or Contracts are acceptable for panelboards installation in accordance with manufacturer's written instructions.

.1 Visually inspect substrate in presence of Departmental Representative.

.2 Inform Departmental Representative of unacceptable conditions immediately upon discovery.

.3 Proceed with installation only after unacceptable conditions have been remedied and after receipt of written approval to proceed from Departmental Representative.

3.2 INSTALLATION

.1 Locate panelboards as indicated and mount securely, plumb, true and square to adjoining surfaces.

.2 Install surface mounted panelboards on plywood backboards.

.3 Mount panelboards to height specified in Section 26 05 00 - Common Work Results for Electrical or as indicated.

.4 Connect loads to circuits.

.5 Connect neutral conductors to common neutral bus with respective neutral identified.

.6 Where panels of different systems (i.e. Standard and Vital Power) supply a common patient care area, ground busses in panels to be interconnect with a minimum #6 AWG ground conductor.

3.3 CLEANING

.1 Progress Cleaning: clean in accordance with Section 01 74 11 - Cleaning.

.1 Leave Work area clean at end of each day.

3.4 PROTECTION

.1 Protect installed products and components from damage during construction.

.2 Repair damage to adjacent materials caused by panelboards installation.

END OF SECTION

Part 1 GENERAL

1.1 RELATED REQUIREMENTS

.1 Section 26 05 00 Common Works Results for Electrical.

1.2 REFERENCES

.1 CSA International
- .1 CSA C22.2 No.42-10, General Use Receptacles, Attachment Plugs and Similar Devices.
- .2 CAN/CSA C22.2 No.42.1-00(R2009), Cover Plates for Flush-Mounted Wiring Devices (Bi-national standard, with UL 514D).
- .3 CSA C22.2 No.55-M1986(R2008), Special Use Switches.
- .4 CSA C22.2 No.111-10, General-Use Snap Switches (Bi-national standard, with UL 20).

1.3 ACTION AND INFORMATIONAL SUBMITTALS

.1 Submit in accordance with Section 01 33 00 - Submittal Procedures.

1.4 CLOSEOUT SUBMITTALS

.1 Submit in accordance with Section 01 78 00 - Closeout Submittals.

.2 Operation and Maintenance Data: submit operation and maintenance data for [wiring devices] for incorporation into manual.

1.5 DELIVERY, STORAGE AND HANDLING

.1 Deliver, store and handle materials in accordance with Section 01 61 00 - Common Product Requirements with manufacturer's written instructions.

.2 Delivery and Acceptance Requirements: deliver materials to site in original factory

Part 2 PRODUCTS

2.1 SWITCHES

.1 15/20 A, 120 V, single pole, double pole and three-way switches to: CSA C22.2 No.111.

.2 Manually-operated general purpose AC switches with following features:
- .1 Terminal holes approved for No. 10 AWG wire.
- .2 Silver alloy contacts.
- .3 Urea or melamine moulding for parts subject to carbon tracking.
- .4 Suitable for back and side wiring.
- .5 Ivory toggle.

.3 Toggle operated fully rated for tungsten filament and fluorescent lamps, and up to 80% of rated capacity of motor loads.

.4 Switches of one manufacturer throughout

project.

2.2 RECEPTACLES

.1 Duplex receptacles, CSA type 5-15 R, 125 V, 15 A, U ground, to: CSA C22.2 No.42 with following features:
- .1 Ivory urea moulded housing.
- .2 Suitable for No. 10 AWG for back and side wiring.
- .3 Break-off links for use as split receptacles.
- .4 Eight back wired entrances, four side wiring screws.
- .5 Triple wipe contacts and rivetted grounding contacts.

.2 Single receptacles CSA type 5-15 R, 125 V, 15 A, U ground with following features:
- .1 Ivor urea moulded housing.
- .2 Suitable for No. 10 AWG for back and side wiring.
- .3 Four back wired entrances, 2 side wiring screws.

.3 Other receptacles with ampacity and voltage as indicated.

.4 Receptacles of one manufacturer throughout project.

2.3 SPECIAL WIRING DEVICES

.1 Special wiring devices:
- .1 Clock hanger outlets, 15 A, 125 V, 3 wire, grounding type, suitable for No. 10 AWG for installation in flush outlet box.
- .2 Electric shaver outlets, 15 A, 125 V, AC with 20 VA isolating transformer with stainless steel cover plate marked RAZOR ONLY / RASOIR SEULEMENT.
- .3 Pilot lights as indicated, with neon type 0.04 W, 125 V lamp and red plastic jewel lense flush type.

2.4 COVER PLATES

.1 Cover plates for wiring devices to: CSA C22.2 No.42.1.

.2 Sheet steel utility box cover for wiring devices installed in surface-mounted utility boxes.

.3 Stainless steel, vertically brushed, 1 mm thick cover plates for wiring devices mounted in flush-mounted outlet box.

.4 Cast cover plates for wiring devices mounted in surface-mounted FS or FD type conduit

boxes.

.5 Weatherproof double lift spring-loaded cast aluminum cover plates, complete with gaskets for duplex receptacles as indicated.

.6 Weatherproof spring-loaded cast aluminum cover plates complete with gaskets for single receptacles or switches.

2.5 SOURCE QUALITY CONTROL

.1 Cover plates from one manufacturer throughout project.

Part 3 EXECUTION

3.1 EXAMINATION

.1 Verification of Conditions: verify that conditions of substrate previously installed under other Sections or Contracts are acceptable for wiring devices installation in accordance with manufacturer's written instructions.

.1 Visually inspect substrate in presence of Departmental Representative.

.2 Inform Departmental Representative of unacceptable conditions immediately upon discovery.

.3 Proceed with installation only after unacceptable conditions have been remedied and after receipt of written approval to proceed from Departmental Representative.

3.2 INSTALLATION

.1 Switches:

.1 Install single throw switches with handle in "UP" position when switch closed.

.2 Install switches in gang type outlet box when more than one switch is required in one location.

.3 Mount toggle switches at height in accordance with Section 26 05 00 - Common Work Results for Electrical.

.2 Receptacles:

.1 Install receptacles in gang type outlet box when more than one receptacle is required in one location.

.2 Mount receptacles at height in accordance with Section 26 05 00 - Common Work Results for Electrical.

.3 Where split receptacle has one portion switched, mount vertically and switch upper portion.

.4 Install GFI type receptacles as indicated.

.3 Cover plates:

.1 Install suitable common cover plates where wiring devices are grouped.

.2 Do not use cover plates meant for flush outlet boxes on surface-mounted boxes.

3.3 CLEANING

.1 Progress Cleaning: clean in accordance with Section 01 74 11 - Cleaning.

.1 Leave Work area clean at end of each day.

.2 Final Cleaning: upon completion remove surplus materials, rubbish, tools and equipment in accordance with Section 01 74 11 - Cleaning.

.3 Waste Management: separate waste materials for reuse or recycling in accordance with Section 01 74 21 - Construction/Demolition Waste Management and Disposal 01 35 21 - LEED Requirements.

.1 Remove recycling containers and bins from site and dispose of materials at appropriate facility.

3.4 PROTECTION

.1 Protect installed products and components from damage during construction.

.2 Protect stainless steel cover plate finish with paper or plastic film until painting and other work is finished.

.3 Repair damage to adjacent materials caused by wiring device installation.

END OF SECTION

Part 1 GENERAL

1.1 RELATED REQUIREMENTS

.1 Section 26 05 00 Common Works Results for Electrical.

1.2 ACTION AND INFORMATIONAL SUBMITTALS

.1 Provide submittals in accordance with Section 01 33 00 - Submittal Procedures.

.2 Product Data:

.1 Provide fuse performance data characteristics for each fuse type and size above 100 A. Performance data to include: average melting time-current characteristics.

1.3 DELIVERY, STORAGE AND HANDLING

.1 Ship fuses in original containers.

.2 Do not ship fuses installed in switchboard.

.3 Store fuses in original containers in storage cabinet moisture free location.

.4 Waste Management and Disposal:

.1 Separate waste materials for reuse or recycling in accordance with Section 01 74 21 - Construction/Demolition Waste Management and Disposal.

1.4 EXTRA MATERIALS

.1 Provide maintenance materials in accordance with Section 01 78 00 - Closeout Submittals.

.2 Three spare fuses of each type and size installed above 600 A.

.3 Six spare fuses of each type and size installed up to and including 600 A.

Part 2 PRODUCTS

2.1 FUSES - GENERAL

.1 Fuse type references L1, L2, J1, R1, etc. have been adopted for use in this specification.

.2 Fuses: product of one manufacturer.

2.2 FUSE TYPES

.1 Class L fuses.

.1 Type L1, time delay, capable of carrying 500% of its rated current for 10 s minimum.

.2 Type L2, fast acting.

.2 Class J fuses.

.1 Type J1, time delay, capable of carrying 500% of its rated current for 10 s minimum.

.2 Type J2, fast acting.

.3 Class R -R fuses.

Type R1, (UL Class RK1), time delay, capable of carrying 500% of its rated current for 10

s minimum, to meet UL Class RK1 maximum let-through limits.

.1 Type R2, time delay, capable of carrying 500% of its rated current for 10 s minimum.

.2 Type R3, (UL Class RK1), fast acting Class R, to meet UL Class RK1 maximum let-through limits.

.4 Class C fuses.

2.3 FUSE STORAGE CABINET

.1 Fuse storage cabinet, manufactured from 2.0 mm thick aluminum 750 mm high, 600 mm wide, 300 mm deep, hinged, lockable front access door finished in accordance with Section 26 05 00 - Common Work Results for Electrical.

Part 3 EXECUTION

3.1 INSTALLATION

.1 Install fuses in mounting devices immediately before energizing circuit.

.2 Ensure correct fuses fitted to physically matched mounting devices.

.1 Install rejection clips for Class R fuses.

.3 Ensure correct fuses fitted to assigned electrical circuit.

.4 Where UL Class RK1 fuses are specified, install warning label "Use only UL Class RK1 fuses for replacement" on equipment.

.5 Install spare fuses in fuse storage cabinet.

END OF SECTION

Part 1 GENERAL

1.1 RELATED REQUIREMENTS

.1 Section 26 05 00 Common Works Results for Electrical.

1.2 REFERENCES

.1 CSA International

.1 CSA C22.2 No. 5-09, Molded-Case Circuit Breakers, Molded-Case Switches and Circuit-Breaker Enclosures (Tri-national standard with UL 489, and NMX-J-266-ANCE-2010).

1.3 ACTION AND INFORMATIONAL SUBMITTALS

.1 Submit in accordance with Section 01 33 00 - Submittal Procedures.

.1 Submit manufacturer's instructions, printed product literature and data sheets for circuit breakers and include product characteristics, performance criteria, physical size, finish and limitations.

.2 Include time-current characteristic curves for breakers with interrupting capacity of 22,000 A symmetrical (rms) and over at system voltage with ampacity of 100 A and over.

.3 Certificates:

.1 Prior to installation of circuit breakers in either new or existing installation, Contractor must submit 3 copies of a production certificate of origin from the manufacturer. Production certificate of origin must be duly signed by factory and local manufacturer's representative certifying that circuit breakers come from this manufacturer and are new and meet standards and regulations.

.1 Production certificate of origin must be submitted to Departmental Representative for approval.

.2 Delay in submitting production of certificate of origin will not justify any extension of contract and additional compensation.

.3 Any work of manufacturing, assembly or installation to begin only after acceptance of production certificate of origin by Departmental Representative. Unless complying with this requirement, Departmental Representative reserves the right to mandate manufacturer listed on

circuit breakers to authenticate new circuit breakers under the contract, and to Contractor's expense.

.4 Production certificate of origin must contain:

.1 Manufacturer's name and address and person responsible for authentication. Person responsible must sign and date certificate.

.2 Licensed dealer's name and address and person of distributor responsible for Contractor's account.

.3 Contractor's name and address and person responsible for project.

.4 Local manufacturer's representative name and address. Local manufacturer's representative must sign and date certificate.

.5 Name and address of building where circuit breakers will be installed:

.1 Project title

.2 End user's reference number

.3 List of circuit breakers

1.4 DELIVERY, STORAGE AND HANDLING

.1 Deliver, store and handle materials in accordance with Section 01 61 00 - Common Product Requirements with manufacturer's written instructions.

Part 2 PRODUCTS

2.1 BREAKERS GENERAL

.1 Moulded-case circuit breakers, Circuit breakers and ground-fault circuit-interrupters : to CSA C22.2 No. 5.

.2 Bolt-on moulded case circuit breaker: quick-make, quick-break type, for manual and automatic operation with temperature compensation for 40 degrees C ambient]

.3 Common-trip breakers: with single handle for multi-pole applications.

.4 Magnetic instantaneous trip elements in circuit breakers to operate only when value of current reaches setting.

.1 Trip settings on breakers with adjustable trips to range from 3-8 times current rating.

.5 Circuit breakers with interchangeable trips

as indicated.

.6 Circuit breakers to have minimum 25 kA symmetrical rms interrupting capacity rating.

2.2 THERMAL MAGNETIC BREAKERS DESIGN A

.1 Moulded case circuit breaker to operate automatically by means of thermal and magnetic tripping devices to provide inverse time current tripping and instantaneous tripping for short circuit protection.

2.3 MAGNETIC BREAKERS DESIGN B

.1 Moulded case circuit breaker to operate automatically by means of magnetic tripping devices to provide instantaneous tripping for short circuit protection.

2.4 SOLID STATE TRIP BREAKERS DESIGN D

.1 Moulded case circuit breaker to operate by means of solid-state trip unit with associated current monitors and self-powered shunt trip to provide inverse time current trip under overload condition, and long time, short time, instantaneous, tripping for phase ground fault short circuit protection.

2.5 OPTIONAL FEATURES

.1 Include:
- .1 Shunt trip.
- .2 Auxiliary switch.
- .3 Motor-operated mechanism [c/w time delay unit].
- .4 Under-voltage release.
- .5 On-off locking device.
- .6 Handle mechanism.

Part 3 EXECUTION

3.1 EXAMINATION

.1 Verification of Conditions: verify that conditions of substrate previously installed under other Sections or Contracts are acceptable for installation in accordance with manufacturer's written instructions.
- .1 Visually inspect substrate in presence of Departmental Representative.
- .2 Inform Departmental Representative of unacceptable conditions immediately upon discovery.
- .3 Proceed with installation only after unacceptable conditions have been remedied and after receipt of written approval to proceed from Departmental Representative.

3.2 INSTALLATION .1 Install circuit breakers as indicated.

3.3 CLEANING .1 Progress Cleaning: clean in accordance with Section 01 74 11 - Cleaning.

.1 Leave Work area clean at end of each day.

END OF SECTION

Part 1 GENERAL

1.1 RELATED REQUIREMENTS

.1 Section 26 05 00 Common Works Results for Electrical.

1.2 PAYMENT

.1 Payment for field testing of ground fault equipment performed by Contractor independent testing laboratory equipment manufacturer in accordance with Section 01 29 83 - Payment Procedures: Testing Laboratory Services.

1.3 REFERENCES

.1 CSA International
- .1 CAN/CSA C22.2 No.144-M91(R2006), Ground Fault Circuit Interrupters.

.2 National Electrical Manufacturers Association (NEMA)
- .1 NEMA PG 2.2-1999(R2009), Application Guide for Ground Fault Protection Devices for Equipment.

1.4 ACTION AND INFORMATIONAL SUBMITTALS

.1 Submit in accordance with Section 01 33 00 - Submittal Procedures.

1.5 CLOSEOUT SUBMITTALS

.1 Submit in accordance with Section 01 78 00 - Closeout Submittals.

1.6 DELIVERY, STORAGE AND HANDLING

.1 Deliver, store and handle materials in accordance with Section 01 61 00 - Common Product Requirements with manufacturer's written instructions.

Part 2 PRODUCTS

2.1 MATERIALS

.1 Equipment and components for ground fault circuit interrupters (GFCI): to CAN/CSA C22.2 No.144 NEMA PG 2.2.

.2 Components comprising ground fault protective system to be of same manufacturer.

2.2 BREAKER TYPE GROUND FAULT INTERRUPTER

.1 Single or Two pole ground fault circuit interrupter for 20 A, 620 V, 1 phase circuit c/w test and reset facilities.

Part 3 EXECUTION

3.1 EXAMINATION

.1 Verification of Conditions: verify that conditions of substrate previously installed under other Sections or Contracts are acceptable for ground fault circuit interrupters installation in accordance with manufacturer's written instructions.

.1 Visually inspect substrate in presence of Departmental Representative.
.2 Inform Departmental Representative of unacceptable conditions immediately upon discovery.
.3 Proceed with installation only after unacceptable conditions have been remedied and after receipt of written approval to proceed from Departmental Representative.

3.2 INSTALLATION

.1 Do not ground neutral on load side of ground fault relay.
.2 Pass phase conductors including neutral through zero sequence transformers.
.3 Connect supply and load wiring to equipment in accordance with manufacturer's recommendations.

3.3 FIELD QUALITY CONTROL

.1 Perform tests in accordance with Section 26 05 00 - Common Work Results for Electrical [and co-ordinate with Section 01 45 00 - Quality Control if required.
.2 Arrange for field testing of ground fault equipment by independent testing laboratory ground fault equipment manufacturer Contractor before commissioning service.
.3 Demonstrate simulated ground fault tests.

3.4 CLEANING

.1 Progress Cleaning: clean in accordance with Section 01 74 11 - Cleaning.
.1 Leave Work area clean at end of each day.

END OF SECTION

Part 1 GENERAL

1.1 RELATED REQUIREMENTS

.1 Section 26 05 00 Common Works Results for Electrical.

1.2 REFERENCES

.1 CSA Group
- .1 CAN/CSA-C22.2 No.4-04(R2009), Enclosed and Dead-Front Switches (Tri-National Standard, with ANCE NMX-J-162-2004 and UL 98).
- .2 CSA C22.2 No.39-13, Fuseholder Assemblies.

1.3 ACTION AND INFORMATIONAL SUBMITTALS

.1 Submit in accordance with Section 01 33 00 - Submittal Procedures.

.2 Product Data:
- .1 Submit manufacturer's instructions, printed product literature and data sheets for disconnect switches - fused and non-fused and include product characteristics, performance criteria, physical size, finish and limitations.

1.4 DELIVERY, STORAGE AND HANDLING

.1 Deliver, store and handle materials in accordance with Section 01 61 00 - Common Product Requirements with manufacturer's written instructions.

Part 2 PRODUCTS

2.1 DISCONNECT SWITCHES

.1 Fusible, Non-fusible, Horsepower rated disconnect switch in CSA enclosure, to CAN/CSA-C22.2 No.4 size as indicated.

.2 Provision for padlocking in off switch position by 3 locks.

.3 Mechanically interlocked door to prevent opening when handle in ON position.

.4 Fuses: size as indicated, in accordance with Section 26 28 13.01 - Fuses - Low Voltage.

.5 Fuseholders: to CSA C22.2 No.39 relocatable and suitable without adaptors, for type and size of fuse indicated.

.6 Quick-make, quick-break action.

.7 ON-OFF switch position indication on switch enclosure cover.

.8 Sprinklerproofed.

2.2 EQUIPMENT IDENTIFICATION

.1 Provide equipment identification in accordance with Section 26 05 00 - Common Work Results for Electrical.

.2 Indicate name of load controlled on size 4

nameplate.

Part 3 EXECUTION

3.1 EXAMINATION

.1 Verification of Conditions: verify that conditions of substrate previously installed under other Sections or Contracts are acceptable for disconnect switches - fused and non-fused installation in accordance with manufacturer's written instructions.

.1 Visually inspect substrate in presence of Departmental Representative.

.2 Inform Departmental Representative of unacceptable conditions immediately upon discovery.

.3 Proceed with installation only after unacceptable conditions have been remedied and after receipt of written approval to proceed from Departmental Representative.

3.2 INSTALLATION

.1 Install disconnect switches complete with fuses if applicable.

3.3 CLEANING

.1 Progress Cleaning: clean in accordance with Section 01 74 11 - Cleaning.

.1 Leave Work area clean at end of each day.

END OF SECTION

Part 1 GENERAL

1.1 RELATED REQUIREMENTS

.1 Section 26 05 00 Common Works Results for Electrical.

1.2 REFERENCES

.1 International Electrotechnical Commission (IEC)
  .1 IEC 947-4-1-2002, Part 4: Electromechanical contactors and motor-starters.

1.3 ACTION AND INFORMATIONAL SUBMITTALS

.1 Provide submittals in accordance with Section 01 33 00 - Submittal Procedures.

1.4 CLOSEOUT SUBMITTALS

.1 Provide maintenance materials in accordance with Section 01 78 00 - Closeout Submittals.

.2 Submit operation and maintenance data for each type and style of motorstarter for incorporation into maintenance manual.

.3 Extra Materials:
  .1 Provide listed spare parts for each different size and type of starter.
    .1 3 contacts, stationary.
    .2 3 contacts, movable.
    .3 1 contacts, auxiliary.
    .4 1 control transformer[s].
    .5 1 operating coil.
    .6 2 fuses.
    .7 10% indicating lamp bulbs used.

1.5 DELIVERY, STORAGE AND HANDLING

.1 Deliver, store and handle in accordance with Section 01 61 00 - Common Product Requirements.

.2 Deliver materials to site in original factory packaging, labelled with manufacturer's name, address.

.3 Packaging Waste Management: remove for reuse and return by manufacturer of pallets, crates, padding and packaging materials in accordance with Section 01 74 21 - Construction/Demolition Waste Management and Disposal.

Part 2 PRODUCTS

2.1 MATERIALS

.1 Starters: to IEC 947-4 with AC4 utilization category.

.2 All equipment to be sprinklerproofed.

2.2 MANUAL MOTOR STARTERS

.1 Single and Three phase manual motor starters of size, type, rating, and enclosure type as

indicated, with components as follows:
.1 Switching mechanism, quick make and break.
.2 Three overload heaters, manual reset, trip indicating handle.

.2 Accessories:
.1 Pushbutton switch: standard Labelled as indicated.
.2 Indicating light: standard type and colour as indicated.
.3 Locking tab to permit padlocking in "ON" or "OFF" position.

2.3 FULL VOLTAGE MAGNETIC STARTERS

.1 Combination magnetic starters of size, type, rating and enclosure type as indicated with components as follows:
.1 Contactor solenoid operated, rapid action type.
.2 Motor overload protective device in each phase, manually reset from outside enclosure.
.3 Wiring and schematic diagram inside starter enclosure in visible location.
.4 Identify each wire and terminal for external connections, within starter, with permanent number marking identical to diagram.

.2 Combination type starters to include circuit breaker with operating lever on outside of enclosure to control disconnect circuit breaker, and provision for:
.1 Locking in "OFF" position with up to 3 padlocks.
.2 Independent locking of enclosure door.
.3 Provision for preventing switching to "ON" position while enclosure door open.

.3 Accessories:
.1 Pushbuttons: standard labelled as indicated.
.2 Indicating lights: standard type and color as indicated.
.3 1-N/O and 1-N/C spare auxiliary contacts unless otherwise indicated.

2.4 CONTROL TRANSFORMER

.1 Single phase, dry type, control transformer with primary voltage and 120 V secondary, complete with secondary fuse, installed in with starter.

.2 Size control transformer for control circuit

load plus 20% spare capacity.

2.5 ACCESSORIES

.1 Pushbutton: heavy duty, oil tight as required.

.2 Selector switches: heavy duty, oil tight as required.

.3 Indicating lights: heavy duty, oil tight, type and colour as indicated.

2.6 FINISHES

.1 Apply finishes to enclosure in accordance with Section 26 05 00 - Common Work Results for Electrical.

2.7 EQUIPMENT IDENTIFICATION

.1 Provide equipment identification in accordance with Section 26 05 00 - Common Work Results for Electrical.

.2 Manual starter designation label, white plate, black letters, size 1, engraved as indicated.

.3 Magnetic starter designation label, white plate, black letters, size engraved as indicated.

Part 3 EXECUTION

3.1 INSTALLATION

.1 Install starters and control devices in accordance with manufacturer's instructions.

.2 Install and wire starters and controls as indicated.

.3 Ensure correct fuses installed.

.4 Confirm motor nameplate and adjust overload device to suit.

3.2 FIELD QUALITY CONTROL

.1 Perform tests in accordance with Section 26 05 00 - Common Work Results for Electrical and manufacturer's instructions.

.2 Operate switches and contactors to verify correct functioning.

.3 Perform starting and stopping sequences of contactors and relays.

.4 Check that sequence controls, interlocking with other separate related starters, equipment, control devices, operate as indicated.

3.3 CLEANING

.1 Clean in accordance with Section 01 74 11 - Cleaning.

.1 Remove surplus materials, excess materials, rubbish, tools and equipment.

END OF SECTION

Part 1 GENERAL

1.1 RELATED REQUIREMENTS

.1 Section 26 05 00 Common Works Results for Electrical.

1.2 SUMMARY

.1 Scope

.1 Provide design and engineering, labor, material, equipment, related services, and supervision required, including, but not limited to, manufacturing, fabrication, erection, and installation for a solid state uninterruptible power supply (UPS) as required for the complete performance of the work, and as shown on the Drawings and as herein specified.

.2 Section Includes:

.1 The work specified in this Section includes, but shall not be limited to, a three-phase, on-line, double conversion, solid state UPS. The UPS shall operate in conjunction with the existing building electrical system to provide high quality power conditioning, back-up power protection, and distribution for electronic equipment loads. The system shall consist of a solid state IGBT rectifier/inverter, power factor corrected rectifier, a 100 percent rated for continuous duty static switch, battery plant, graphical status/control panel, and synchronizing circuitry as described herein.

1.3 REFERENCES

.1 General: The publications listed below form a part of this Specification to the extent referenced. The publications are referred to in the text by the basic designation only. The edition/revision of the referenced publications shall be the latest date as of the date of the Contract Documents, unless otherwise specified.

.2 Institute of Electrical and Electronics Engineers, Inc. (IEEE):

.1 ANSI/IEEE C62.41, "Recommended Practice for Surge Voltages in Low-Voltage AC Power Circuits" (copyrighted by IEEE, ANSI approved).

.3 National Electrical Manufacturers Association (NEMA):

1. NEMA PE 1, " Uninterruptible Power Systems (UPS) - Specification and Performance Verification."

.4 National Fire Protection Association (NFPA):

1. NFPA 70, "National Electrical Code" (copyrighted by NFPA, ANSI approved) - hereinafter referred to as NEC.

.5 Underwriters Laboratories, Inc. (UL):

1. UL 1778, "Standard for Uninterruptible Power Supply Equipment" (copyrighted by UL, ANSI approved).

1.4 SYSTEM DESCRIPTION

.1 General

1. Double Conversion – Transformerless Design
2. Front access only required for service
3. Top or bottom cable entry
4. High efficiency (96% at low load levels from 25% to 75%)
5. Battery charging in bypass operation

.2 Design Requirements

1. The UPS shall be sized for 160 kVA load.
2. The UPS battery system shall be sized for 160 kVA at power factor 0.9 for 15 minutes.

.3 System Characteristics

.1 Input: The system input shall be configurable for either single or dual utility derived from a three phase wye source. The system should facilitate both top and bottom cable entry.

.1 Input voltage: 800 volts AC, -25 percent +20 percent (+25% for 1 minute), three-phase, 3-wire (3PH + G).

.2 Frequency: 40-70 Hertz

.3 Input Power Factor Correction:
1) 0.97 > 10% load
2) 0.98 > 20% load
3) 0.99 > 40% load

.4 Total Harmonic Distortion (THDI):
1) < 3% @ 100% load

2) < 4% @ 50% load
3) < 6% @ 25% load

.5 Short-circuit Withstand Rating: 65 kA @ required breaker.

.6 Protection: Built-in Backfeed Contactor.

.7 Inrush Current: Less than nominal input current for less than one cycle. Shall not exceed 800% of the rectifier/battery charger full load current.

.8 Input Surge Protection: UPS shall be equipped to withstand surges per ANSI/IEEE C62.41.

.2 UPS Output:

.1 Output Voltage: 208 volts AC, ±1 percent steady state variation phase-to-phase voltage volts AC, three-phase, 3-wire (3PH + G) or 4 wire (3PH + N + G).

.2 Frequency: 50/60 hertz, ±1.0 percent (free running)

.3 Output voltage range
1) Symmetric load (0-100%):
.1 ± 1% static
.2 ± 5% after 2 ms
.3 ± 1% after 50 ms

.4 Output Voltage Transient Response: The output voltage returns to within ±1% of the steady state value within 50ms.

.5 Output Power Factor: 0.9

.6 Ouput Voltage Transient Characteristics:
1) 20% load step change +3%
2) 50% load step change +3%
3) 100% load step change +5%

.7 Total Harmonic Distortion (THDU):
1) < 2% at 100% linear load
2) < 3% at 100% non-linear load

.8 Slew Rate (Hz/sec): Programmable 0.25, 0.5, 1, 2, 4 ,6

.9 Load Power Factor: 0.7 leading to 0.5 lagging without derating

.10 Overload Rating:
1) Normal Operation:
.1 150% for 1 minute at 40°C
.2 125% for 10 minutes at 40°C
2) Battery Operation:
.1 150% for 1 second at 40°C
.2 125% for 1 minute at 40°C
3) Bypass Operation:
.1 1000% for 100 ms

.11 System AC-AC Efficiency:
.1 Up to 96.2% in normal operation
.2 Up to 99% in ECO mode

.3 Battery: The battery system should consist of modular battery cabinets
.1 Battery Voltage: 480 volts DC nominal
.2 Charging Power in % of output power:
1) 40% charge ≤ 80% load
2) 20% charge ≤ 100% load
.3 Battery Test: Manual or automatic (selectable)
.4 Deep Discharge Protection
.5 Recharge according to Battery Temperature
.6 Cold Start
.7 Battery Type: Valve regulated sealed lead acid (VRLA). Either in traditional top terminal or modular cabinet

1.5 SUBMITTALS

.1 Product Data: Submit product data showing material proposed. Submit sufficient information to determine compliance with the Drawings and Specifications. Product data shall include, but shall not be limited to, the following:

.1 Catalog sheets and technical data sheets to indicate physical data and electrical performance, electrical characteristics, and connection requirements.

.2 Manufacturer’s installation instructions indicating application conditions and limitations of use stipulated by product inspecting and testing agency. Include instructions for storage, handling, protection, examination, preparation, installation, and starting of the product. Include equipment installation outline, connection diagram for external cabling, internal wiring diagram, and written instruction for installation.

.2 Shop Drawings: Submit shop drawings for each product and accessory required. Include information not fully detailed in manufacturer’s standard product data, including, but not limited to, complete electrical characteristics and connection requirements. Provide detailed equipment outlines with cabinet dimensions and spacing requirements; location of conduit entry/exit paths; location of floor/seismic mounting;

available battery types/sizes; cabinet weights; heat rejection and air flow requirements; single line diagram; and control and external wiring.

.3 Wiring Diagrams: Submit wiring diagrams detailing power, signal, and control systems, clearly differentiating between manufacturer installed wiring and field installed wiring, and between components provided by the manufacturer and those provided by others.

1.6 QUALITY ASSURANCE

.1 Qualifications:

.1 Manufacturer Qualifications: Manufacturer shall be a firm engaged in the manufacture of solid state UPS of types and sizes required, and whose products have been in satisfactory use in similar service for a minimum of 20 years.

.1 The manufacturer shall be ISO 9001 certified and shall be designed to internationally accepted standards.

.2 Installer Qualifications: Installer shall be a firm that shall have a minimum of five years of successful installation experience with projects utilizing solid state UPS similar in type and scope to that required for this Project.

.2 Regulatory Requirements: Comply with applicable requirements of the laws, codes, ordinances, and regulations of local authorities having jurisdiction. Obtain necessary approvals from such authorities.

.1 The UPS shall meet the requirements of the following standards:

.1 Safety: UL 1778 4th edition

.2 EMC/EMI/RFI: FCC47 Part 15

.3 Markings: UL1778

.4 Transportation: ISTA 2B

.5 Seismic Zone: IBC Level 2:2006

.3 Source Responsibility: Materials and parts comprising the UPS shall be new, of current manufacture, and shall not have been in prior service, except as required during factory testing. Active electronic devices shall be solid state and shall not exceed the manufacturer’s recommended tolerances for temperature or current to ensure maximum reliability. Semiconductor devices shall be

sealed. Relays shall be provided with dust covers. The manufacturer shall conduct inspections on incoming parts, modular assemblies, and final products.

1.7 PROJECT CONDITIONS

.1 The UPS shall operate under the following environmental conditions:

.1 Temperature:

.1 Operating ambient temperature: 32 °F (0 °C) to 104 °F (40 °C).

.2 Storage ambient temperature with batteries: 5°F (-15 °C) to 104 °F (40 °C).

.3 Storage ambient temperature without batteries: -77°F (-25 °C) to 131 °F (55 °C).

.2 Relative Humidity (Operating and Storage): 0 percent to 95 percent non-condensing.

.3 Elevation:

.1 Operating:

.1 3300 feet (1000 m): 1.000

.2 5000 feet (1500 m): 0.975

.3 6600 feet (2000 m): 0.950

.4 8300 feet (2500 m): 0.925

.5 10000 feet (3000 m): 0.900

.2 Non-Operating: 0-15000 m

.4 Audible Noise:

.1 65 dBA at 100% load and 3 feet (1 m) from surface

.2 55 dBA at 70% load and 3 feet (1 m) from surface

1.8 WARRANTY

.1 Factory Warranty: The Contractor shall warrant the work of this Section to be in accordance with the Contract Documents and free from faults and defects in materials and workmanship for period indicated below. This warranty shall extend the one year period of limitations contained in the General Conditions. The warranty shall be countersigned by the Installer and the manufacturer.

.1 UPS Cabinets: The UPS shall be covered by a full parts and labor warranty from the manufacturer for a period of 12 months from date of installation or acceptance by the Owner or 18 months from date of shipment from the manufacturer, whichever occurs first.

.2 Battery Cabinets: The battery manufacturer's warranty shall be passed through to the final Owner and shall have a minimum period of one year.

.2 Additional Owner Rights: The warranty shall not deprive the Owner of other rights the Owner may have under other provisions of the Contract Documents and shall be in addition to and run concurrent with other warranties made by the Contractor under requirements of the Contract Documents.

1.9 MAINTENANCE

.1 A complete offering of preventative and full service maintenance contracts for the UPS system and the battery system shall be available from the manufacturer.

.2 The manufacturer shall, upon request, provide spare parts kits for the UPS module in a timely manner as well as provide access to qualified factory trained first party service personnel to provide preventative maintenance and service on the UPS module when required.

.3 UPS subassemblies, as well as the battery, shall be accessible from the front. UPS design shall provide maximum reliability and minimum MTTR (mean time to repair). To that end, the UPS shall be equipped with a self test function to verify correct system operation. The self test function shall identify the subassembly requiring repair. The electronic UPS control and monitoring assembly shall therefore be fully microprocessor based, thus doing away with potentiometer settings. This shall allow:

.1 Auto compensation of component drift.

.2 Self adjustment of replaced subassemblies.

.3 Extensive acquisition of information vital for computer aided diagnostics (local or remote).

.4 Socket connection to interface with computer aided diagnostics system.

.4 The UPS shall be repairable by replacing standard subassemblies requiring no adjustments. Communication via a modem with a remote maintenance system shall be possible.

.5 The manufacturer shall offer additional preventative maintenance and service contracts covering both the UPS and the battery bank. Accredited professional service engineers employed exclusively in the field of critical

power systems service shall perform maintenance and service. The manufacturer shall also offer extended warranty contracts.

Part 2 PRODUCTS

2.1 MANUFACTURERS

.1 Basis of Design:

.1 Product specified is Galaxy VM by Schneider Electric. Items specified are to establish a standard of quality for design, function, materials, and appearance. Equivalent products by other manufacturers are acceptable.

2.2 MODES OF OPERATION

.1 UPS module shall be designed to operate as a double conversion, on-line reverse transfer system in the following modes.

.1 Normal: The UPS system shall continuously supply power to the critical load.

.2 Battery: Upon failure of the utility AC power source, the critical load shall be supplied by the inverter, which, without any interruption, shall obtain its power from the battery.

.3 Recharge: Upon restoration of the utility AC power source (prior to complete battery discharge), the PFC rectifier shall power the inverter and simultaneously recharge the battery.

.4 Static Bypass: The static bypass switch shall be used to transfer the load to the bypass without interruption to the critical power load. This shall be accomplished by turning the inverter off. Automatic re-transfer or forward transfer of the load shall be accomplished by turning the inverter on.

.5 Maintenance Bypass: In maintenance bypass the load is supplied with unconditioned power from the bypass input.

.6 ECO Mode: The UPS system is configured to use static bypass operation as the preferred mode under predefined. Transfers to battery operation upon utility failure. Efficiency up to 99%.

.7 ECOnversion: ECOnversion allows the system to supply the active part of the load through the bypass. The inverter is kept running in parallel with the bypass source and supplies the reactive part of

the load. The input power factor of the UPS is, regardless of the load power factor, maintained close to unity as the reactive part of load is significantly reduced in the UPS input current. In case if an interruption to the utility/mains supply, the inverter immediately maintains the output voltage so that breaks or drops during this transfer are practically eliminated. UPS operates with static bypass in parallel with main inverter. Main inverter actively corrects power factor, and harmonics to provide sinusoidal main input current. Transfer time to double conversion <1milliseconds.

.8 External Synchronization: Synchronization of the output of the UPS with any other independent source for use with downstream transfer switches. The synchronization at the UPS is controlled from an input on the interface boards.

2.3 COMPONENT DESCRIPTION

.1 PFC Rectifier and Battery Charger: Incoming AC power shall be converted to a regulated DC output voltage by an IGBT (insulated gate bipolar transistor) power factor correction (PFC) rectifier. The PFC rectifier shall provide high quality DC power to charge the batteries and power the inverter and shall have the following characteristics:

.1 Input Power Factor Correction (PFC): The PFC rectifier shall be power factor corrected so as to maintain an input power factor of 0.99 @ loads > 40% to unity to ensure generator compatibility and avoid reflected harmonics from disturbing loads sharing the utility power. The rectifier output shall be filtered with a ripple current not exceeding 1% rms over the allowable continous input voltage range.

.2 Input Harmonic Current Suppression: The PFC rectifier shall produce a sinusoidal input AC current on each phase with low harmonic content, limiting THD on the UPS input to below 3 percent @ 100% load.

.3 Battery Charger Current Limiting: The UPS shall be equipped with a system designed to limit the battery recharge current.

.1 40% charger up to 80% load
.2 20% charger 80% - 100% load

.2 Inverter: The UPS output shall be derived from a variable frequency Pulse Width Modulated (PWM) IGBT inverter design. The inverter shall be capable of providing the specified precise output power characteristics while operating over the battery voltage range. Inverter shall be individually fused with fast-acting fuses. UPS display shall indicate inoperable fuses.

.1 Transient Response

.1 The inverter transient voltage shall not exceed the following parameters:

.1 ±5% for a 10% to 100% step load application and removal with 10% initial load or 100% initial load.

.2 ±5% for transfer of rated load from the bypass source to the UPS inverter output during automatic forward transfer of the static bypass transfer switch.

.3 0% for loss of or return of main AC input.

.2 Transient Recovery

.1 The output voltage returns to within ±1% of the steady state value within 50ms.

.3 Fault Clearing

.1 The inverter shall electronically be turned off to protect against excessive overload conditions which exceed the parameters defined.

.2 UPS systems shall sense an overload condition and automatically transfer to the bypass input source which shall be used to provide the necessary fault clearing current required.

.4 Inverter DC Protection

.1 The inverter shall be protected by the following features that shall be independently adjustable for maximum system flexibility.

.1 DC Over-voltage Trip.

.2 DC Under-voltage Shutdown.

.3 DC Under-voltage Disconnect annunciated by an internal visual alarm and relay contact closure.

.5 Output Protection

.1 The inverter shall be electronically turned off to protect against overloads and abnormal load conditions which exceed the units rating.

.2 UPS systems shall sense an overload condition and automatically transfer to the bypass input source which shall be used to provide the necessary current required.

.6 Over-current Protection

.1 The inverter shall be protected from excessive overloads, including reverse currents, by fast acting fuses to prevent damage to power semiconductors. All fuses shall be provided with a blown fuse indicator with alarm indication on the control panel.

.3 Static Bypass - 100 Percent Rated, Continuous Duty: The static bypass transfer switch shall be solid state, rated for 100 percent continuous duty without mechanical contactor device in parallel for higher reliability and consistent response time and shall operate under the following conditions:

.1 Uninterrupted Transfer: The static bypass transfer switch shall automatically cause the bypass source to assume the critical load without interruption after the logic senses one of the following conditions:

.1 Inverter overload exceeds unit's rating.

.2 Battery protection period expired and bypass current is available.

.3 Inoperable inverter.

.2 Interrupted Transfer: If the bypass source is beyond the conditions stated below, the UPS shall make an interrupted transfer (not less than 100 milliseconds in duration).

.1 Bypass voltage greater than +10 percent, -10 percent from the UPS rated output voltage.

.2 Bypass frequency tolerance is user selectable to ±0.1Hz, ±3Hz, and ±10Hz.

.3 Automatic Uninterrupted Forward Transfer: The static bypass transfer switch shall automatically forward transfer power, without interruption, after the UPS

inverter is turned on after an instantaneous overload induced reverse transfer has occurred and the load current returns the UPS's nominal rating or less.

.4 Manual Transfer: A manual static transfer shall be initiated from the UPS control panel by turning the UPS inverter off.

.5 Overload Ratings: Each static bypass transfer switch shall have the following overload characteristics:

.1 1,000% of UPS output rating for 100 milliseconds.

.2 150% of UPS output rating for one (1) minute.

.3 100% of UPS ouput rating indefinitely.

.4 Each switch shall be suitable for all load conditions permitted by the upstream protective devices such that no damage is sustained during operation.

2.4 SYSTEM CONTROLS AND INDICATORS

.1 Microprocessor Controlled Logic:

.1 The full UPS operation shall be provided through the use of microprocessor controlled logic. Operation and parameters shall be firmware controlled, thus eliminating the need for manual adjustments or potentiometers. The logic shall include, but shall not be limited to, a self test and diagnostic circuitry. Every printed circuit assembly or plug-in power assembly shall be monitored. Diagnostics shall be performed via a PC through the local diagnostics port on the UPS. UPS shall be microprocessor controlled.

.2 The UPS shall include, but shall not be limited to, a standard easy to use control and indicator panel. Included shall be a backlit, color graphic animated LCD display and LED indicators. The UPS panel shall include UPS on and UPS off pushbuttons that shall permit the Owner to command the UPS on or off.

.2 Front Panel 7" Color Graphical Display: The UPS control panel shall provide a backlit, color graphic display with choice of 18 operating languages for indication of UPS status, metering, battery status, alarm/event log, and advanced operational features.

.3 Access: The display shall provide access to:
- .1 Mimic diagram indicating UPS power flow.
- .2 Measurements, status indications, and events.
- .3 Personalization menu protected by a password, used to make specific settings.
- .4 Event log with time stamping.
- .5 Access to measurements.

.4 System Parameters Monitored: The visual display shall include, but shall not be limited to, the following system parameters based on true RMS metering:
- .1 Measurements:
  - .1 Input voltage (Ph-Ph and PH-N).
  - .2 Input current per phase.
  - .3 Bypass voltage.
  - .4 Bypass input frequency.
  - .5 UPS output voltage (Ph-Ph and Ph-N).
  - .6 UPS output current per phase.
  - .7 UPS output frequency.
  - .8 UPS output percent load.
  - .9 UPS output kVA.
  - .10 UPS output power factor.
  - .11 Battery voltage.
  - .12 Crest factor.
  - .13 Battery current.
  - .14 Battery backup time and remaining service life.
- .2 Status Indications and Events:
  - .1 Load on battery.
  - .2 Load on UPS.
  - .3 Load on bypass.
  - .4 Low battery warning.
  - .5 General alarm.
  - .6 Battery fault.
  - .7 Remaining back-up time during operation on battery power.
  - .8 Bypass source outside tolerances.
  - .9 Additional indications shall provide maintenance assistance.
- .3 Time-Stamped Historical Events: This function shall time stamp and store important status changes, anomalies, and faults.

.3 LED Status Indicators: The UPS control panel

shall provide three LEDs that shall signal the following status conditions:

.1 Green: The Load is protected.

.2 Green + Orange: The load is protected, but the system reports a warning alarm.

.3 Orange + Red: The load is unprotected and the system reports a warning and a critical alarm

.4 Red: The load is unprotected and the system reports a critical alarm.

.4 Buttons:

1. Inverter off
2. Inverter on

.5 Audible Alarm Reset: The UPS shall provide an audible alarm that can be stopped using the user interface.

.6 Emergency Power Off (EPO): The UPS shall be equipped with provisions for remote emergency power off and dry contact input that shall be used to command UPS shutdown remotely.

.7 USB port: shall be provided for field diagnostics.

.8 Dry Contacts: The UPS shall be provided standard with a programmable input/output relay board. This board shall have six dry contacts for inputs and six relays for output.

1. Input Contacts: Programmable as:
   - .1 Custom Input 1
   - .2 Custom Input 2
   - .3 Ground Fault
   - .4 External Battery Monitor Fault
   - .5 Battery Room Ventilation Fault
   - .6 Supplied By Genset
2. Output Relays: Programmable as:
   - .1 Common Alarm
   - .2 Normal Operation
   - .3 Battery Operation
   - .4 Maintenance Bypass
   - .5 Static Bypass
   - .6 ECO Mode
   - .7 Output Overload
   - .8 Fan Fault
   - .9 Battery Fault
   - .10 Battery Disconnected
   - .11 Battery Voltage Low
   - .12 Input Out of Tolerance
   - .13 Bypass Out of Tolerance
   - .14 Output Out of Tolerance
   - .15 UPS Warning

.16 UPS Critical
.17 Parallel Redundancy Lost
.18 External Fault
.19 UPS Maintenance Mode
.20 System Critical
.21 System Warning
.22 System Common Alarm

3. The contacts shall be normally open and shall change state to indicate the operating status. The contacts shall be rated at 2.0 amperes (250 volts AC/30 volts DC).

2.5 MECHANICAL DESIGN AND VENTILATION

.1 Cabinet: The UPS shall be housed in two freestanding cabinets with dead front construction. The mechanical structure of the UPS shall be sufficiently strong and rigid to withstand handling and installation operations. The sheet metal elements in the structure shall be protected against corrosion by a suitable treatment, such as zinc electroplating, bi-chromating, epoxy paint, or an equivalent.

.2 Cable Access: The standard UPS available shall accommodate top or bottom cable entry in standard cabinet

2.6 BATTERY

.1 General: The UPS module shall use a valve-regulated sealed lead acid heavy duty industrial battery, designed for auxiliary power service in an UPS application. The primary battery shall be furnished with impact-resistant plastic cases and housed in a matching cabinet(s) next to the UPS module.

.2 Protection against Deep Discharge and Self-Discharge: The UPS shall be equipped with a device designed to protect the battery against deep discharge, depending on discharge conditions, with isolation of the battery by a circuit breaker. In particular, a monitoring device shall adjust the battery shutdown voltage as a function of a discharge coefficient to avoid excessive discharge at less than the rated output. A second device shall avoid self-discharge of the battery into the UPS control circuits during an extended shutdown of the UPS (over two hours).

.3 Battery Self-Tests:

.1 Battery Test: This feature performs a number of tests on the batteries, such as

fuse-blown check, weak battery detection, and symmetry error. The battery self-test can be setup to run automatically in different time intervals between weekly and up to a year.

.2 Runtime calibration: This feature is used for re-calibrating the estimated remaining runtime value.

2.7 OPTIONAL ACCESSORIES

.1 StruxureWare Data Center Expert: A centralized infrastructure management platform hereafter referred to as Data Center Expert shall be available for purposes of complete system monitoring and management of all components outlined in this specification used as a single solution for small IT or part of the StruxureWare software stack providing data to systems such as Data Center Operation.

.1 Monitoring - Data Center Expert shall be capable of monitoring a system through a network of Cat 5 cable and a switch supplied by the user. This switch shall relay information to Data Center Expert, which in turn shall allow access to this information via the user’s public network via a single IP address.

.2 Monitored Values: Data Center Expert shall be capable of monitoring alarms, general status parameters, voltage and current of the PDU.

.3 Thresholds: For individualized customer needs, Data Center Expert shall allow for user configurable thresholds for alarm notification. With this feature, Data Center Expert can notify clients of reaching.

.4 Public Network Monitoring: Data Center Expert shall also be capable of monitoring other Schneider Electric devices that are connected to the client’s public network.

.2 Battery Cabinets: Matching battery cabinets shall be furnished in adjacent versions.

.3 External Control and Communications Devices: The UPS shall contain two smart slots for the following optional control and communications devices:

.1 Dry Contacts/I/O accessory (AP9810+ AP9631orAP9635): Customizable input and output contacts for the UPS network management card 2 with environmental

monitoring (2 inputs/ 1 output)..

.2 Temperature Sensor (AP9631 or AP9635): The temperature Sensor enables the UPS environment to be monitored by taking regular measurements of temperature. Its connection to the Network Management Card enables monitoring or notification of alarms via your computer network. If an additional temperature sensor is needed, procure (AP9335T)

.3 Temperature and humidity Sensor(AP9335TH + AP9631 or AP9635): The temperature and humidity Sensor enables the UPS environment to be monitored by taking regular measurements of temperature and humidity. Its connection to the Network Management Card enables monitoring or notification of alarms via your computer network.

.4 Network Management Card (AP9630): The UPS NMC display has possibility to connect to SNMP, Web, Data Center Expert, Modbus, RMS over ethernet. But in the standard display NMC it is not possible to connect sensors.

.4 Seismic Anchors: ship included with the system.

.5 Dual Input: Provide dual input to accommodate a separate input source.

Part 3 EXECUTION

3.1 EXAMINATION .1 Verification of Conditions: Examine areas and conditions under which the work is to be installed, and notify the Contractor in writing, with a copy to the Owner and the Architect/Engineer, of any conditions detrimental to the proper and timely completion of the work. Do not proceed with the work until unsatisfactory conditions have been corrected.

.1 Beginning of the work shall indicate acceptance of the areas and conditions as satisfactory by the Installer.

3.2 INSTALLATION .1 Preparation and installation shall be in accordance with reviewed product data, final shop drawings, manufacturer’s written recommendations, and as indicated on the Drawings.

3.3 FIELD QUALITY CONTROL .1 Field Service Engineer Qualifications: The manufacturer shall employ a 7 x 24 nationwide

(international where applicable) field service organization with rapid access to all regions of the nation. The responding service professionals shall be factory-trained engineers with an accredited and proven competence to service three-phase UPS.

.2 Spare Parts: Field Engineers shall have immediate access to recommended spare parts with additional parts storage located in regional depots. Additional spare parts shall be accessible on a 7 x 24 basis from the national depot and shall be expedited on a next available flight basis or via direct courier (whichever mode is quickest).

3.4 DEMONSTRATION

.1 Provide the services of a factory-authorized service representative of the manufacturer to provide start-up service and to demonstrate and train the Owner's personnel.

.1 Test and adjust controls and safeties. Replace damaged or malfunctioning controls and equipment.

.2 Train the Owner's maintenance personnel on procedures and schedules related to start-up and shutdown, troubleshooting, servicing, and preventive maintenance.

.3 Review data in operation and maintenance manuals with the Owner's personnel.

.4 Schedule training with the Owner, through the Architect/Engineer, with at least seven day's advanced notice.

3.5 PROTECTION

.1 Provide final protection and maintain conditions in a manner acceptable to the Installer that shall ensure that the solid state UPS shall be without damage at time of Substantial Completion.

END OF SECTION

Part 1 GENERAL

1.1 RELATED REQUIREMENTS

.1 Section 26 05 00 Common Works Results for Electrical.

1.2 REFERENCES

.1 CSA International
- .1 CSA C22.2 No.141-10, Emergency Lighting Equipment.

1.3 REFERENCES

.1 American National Standards Institute (ANSI)
- .1 ANSI C82.1-04, Lamp Ballasts-Line Frequency Fluorescent Lamp Ballast.
- .2 ANSI C82.4-02(R2007), Ballasts for High-Intensity-Discharge and Low-Pressure Sodium Lamps Multi Supply Type.

.2 American National Standards Institute/Institute of Electrical and Electronics Engineers (ANSI/IEEE)
- .1 ANSI/IEEE C62.41-1991, Recommended Practice for Surge Voltages in Low-Voltage AC Power Circuits.

.3 ASTM International Inc.
- .1 ASTM F1137-00(2006), Standard Specification for Phosphate/Oil and Phosphate/Organic Corrosion Protective Coatings for Fasteners.

.4 Canadian Standards Association (CSA International)

.5 ICES-005-07, Radio Frequency Lighting Devices.

.6 Underwriters' Laboratories of Canada (ULC)

1.4 ACTION AND INFORMATIONAL SUBMITTALS

.1 Provide submittals in accordance with Section 01 33 00 - Submittal Procedures.

.2 Product Data:
- .1 Provide manufacturer's printed product literature, specifications and datasheet and include product characteristics, performance criteria, physical size, finish and limitations.
- .2 Provide complete photometric data prepared by independent testing laboratory for luminaires where specified, for approval and review by Departmental Representative.
- .3 Photometric data to include: VCP Table where applicable spacing criterion.

1.5 QUALITY ASSURANCE

.1 Provide mock-ups in accordance with Section 01 45 00 - Quality Control.

1.6 DELIVERY, STORAGE AND HANDLING

.1 Deliver, store and handle materials in accordance with Section 01 61 00 - Common Product Requirements.

Part 2 PRODUCTS

2.1 LAMPS

.1 Incandescent lamps to be - clear, A19, 100 Watt with 1000 hour lamp life, rough-service rated; or as indicated.

.2 Tungsten halogen lamps to be - clear, T-3, 300 Watt, RSC base, 2000 hour lamp life, 5000 lumens; or as indicated.

.3 Fluorescent lamps to be - T8, 32 Watt, medium bi-pin, rapid-start, 4100 K, 30,000 hour lamp life, 2950 initial lumens, CRI 80; or as indicated.

.4 Metal halide lamps to be - clear, BT37, 400 Watt, mogul base, horizontal burn, 4100 K, 15,000 hour lamp life, 36,000 initial lumens, CRI65, open or enclosed type to suit the luminaire; or as indicated.

.5 Low pressure sodium lamps to be - clear, T21, 135 Watt, BY22d base, horizontal burn,16,000 hour lamp life, 22,000 initial lumens; or as indicated.

.6 High pressure sodium lamps to be - clear, ED18, 400 Watt, mogul base, 30,000 hour lamp life, 54,000 initial lumens; or as indicated.

.7 Compact fluorescent lamps to be - 18 Watt, G24q-2 base, 12,000 hour lamp life, 12,000 initial lumens, 4100 K, CRI 80; or as indicated.

2.2 BALLASTS

.1 Fluorescent ballast: CBM and CSA certified, energy efficient type, IC electronic IC electronic dimmable.

.1 Rating: voltage as indicated V, 60 Hz, for use with 2-32W, rapid start lamps.

.2 Totally encased and designed for 40 degrees Celsius ambient temperature.

.3 Power factor: minimum 95% with 95% of rated lamp lumens.

.4 Current crest factor: 1.7 maximum.

.5 Harmonics: 10% maximum THD.

.6 Operating frequency of electronic ballast: 20 kHz minimum.

.7 Total circuit power: 62 Watts.

.8 Ballast factor: greater than 0.90.

.9 Sound rated: Class A.

.10 Mounting: integral with luminaire.

.2 Metal halide ballast:

.1 Rating: voltage as indicated V, 60 Hz, for use with 1-400W. Provide circuitry for quartz re-strike standby light where indicated.

.2 Totally encased and designed for 40 degrees Celsius ambient temperature.

.3 Power factor: minimum 95% with 95% of rated lamp lumens.

.4 Type: solid state.

.5 Input voltage range: plus or minus 10% of nominal.

.6 Minimum starting temperature: minus 30 degrees Celsius at 90% line voltage.

.7 Mounting: indoor or outdoor integral with luminaire.

.8 Current crest factor: 1.7 maximum current.

2.3 FINISHES

.1 Light fixture finish and construction to meet ULC listings and CSA certifications related to intended installation.

2.4 OPTICAL CONTROL DEVICES

.1 As indicated in luminaire schedule.

2.5 LUMINAIRES

.1 As indicated in luminaire schedule.

2.6 LED FIXTURES

.1 All specified luminaires shall be an integrated LED module system in which each component functions as part of an integrated whole, and shall conform with IES LM-79-08 and IES LM-80-08.

.2 LEDs shall conform to or exceed ANSI binning standards for consistency in flux, colour temperature, and forward voltage.

.3 LED modules and electronic drivers shall be replaceable at end of life. Luminaires that must be removed and disposed of when LEDs reach end of life SHALL NOT be used.

.4 LED shall have consistent fixture-to-fixture color temperature within 3 MacAdam ellipses on all interior fixtures.

.5 Replaceable LED PC board with quick connector mounts directly to heat sink.

.6 Light engine mounts directly to heat sink and is easily replaceable..

.7 Cast aluminum heat sink integrated directly with housing provides superior thermal

management to ensure the long life of LED.

.8 Rated to deliver L80/LM79 performance for a minimum of 50,000 hours at 45 degrees C ambient temp.

.9 Minimum 80+CRI for interior fixture and 70+CRI for exterior fixtures.

Part 3 EXECUTION

3.1 INSTALLATION

.1 Locate and install luminaires as indicated.

.2 Provide adequate support to suit ceiling system.

3.2 WIRING

.1 Connect luminaires to lighting circuits:

.1 Install flexible or rigid conduit for luminaires as indicated.

3.3 LUMINAIRE SUPPORTS

.1 For suspended ceiling installations support luminaires independently of ceiling support luminaires from ceiling grid in accordance with local inspection requirements.

3.4 LUMINAIRE ALIGNMENT

.1 Align luminaires mounted in continuous rows to form straight uninterrupted line.

.2 Align luminaires mounted individually parallel or perpendicular to building grid lines.

3.5 CLEANING

.1 Clean in accordance with Section 01 74 11 - Cleaning.

.1 Remove surplus materials, excess materials, rubbish, tools and equipment.

END OF SECTION

Part 1 GENERAL

1.1 RELATED REQUIREMENTS

.1 Section 26 05 00 Common Works Results for Electrical.

1.2 REFERENCES

.1 CSA International

.1 CSA C22.2 No.141-10, Emergency Lighting Equipment.

1.3 ACTION AND INFORMATIONAL SUBMITTALS

.1 Submit in accordance with Section 01 33 00 - Submittal Procedures.

1.4 CLOSEOUT SUBMITTALS

.1 Submit in accordance with Section 01 78 00 - Closeout Submittals.

.2 Operation and Maintenance Data: submit operation and maintenance data for emergency lighting for incorporation into manual.

1.5 DELIVERY, STORAGE AND HANDLING

.1 Deliver, store and handle materials in accordance with Section 01 61 00 - Common Product Requirements with manufacturer's written instructions.

1.6 WARRANTY

.1 For batteries in this Section 26 52 00 - Emergency Lighting, 12 months warranty period is extended to 120 months.

Part 2 PRODUCTS

2.1 EQUIPMENT

.1 Emergency lighting equipment: to CSA C22.2 No.141.

.2 Supply voltage: 120 V, AC.

.3 Output voltage: 24 V DC.

.4 Operating time: 60 minutes.

.5 Battery: sealed, maintenance free.

.6 Charger: solid state, multi-rate, voltage/current regulated, inverse temperature compensated, short circuit protected with regulated output of plus or minus 0.01 V for plus or minus 10% input variations.

.7 Solid state transfer circuit.

.8 Low voltage disconnect: solid state, modular, operates at 80% battery output voltage.

.9 Signal lights: solid state, for 'AC Power ON' and 'High Charge'.

.10 Lamp heads: integral on unit and remote, 345 degrees horizontal and 180 degrees vertical adjustment. Lamp type: As indicated on drawing.

.11 Cabinet: suitable for direct or shelf

mounting to wall and c/w knockouts for conduit. Removable or hinged front panel for easy access to batteries.

.12 Finish: Grey.

.13 Auxiliary equipment:

.1 Ammeter.

.2 Voltmeter.

.3 Test switch.

.4 Time delay relay.

.5 Battery disconnect device.

.6 AC input and DC output terminal blocks inside cabinet.

.7 Shelf.

.8 Cord for AC direct connection.

.9 RFI suppressors.

2.2 WIRING OF REMOTE HEADS

.1 Conduit: type, in accordance with Section 26 05 34 - Conduits, Conduit Fastenings and Conduit Fittings.

.2 Conductors: type in accordance with Section 26 05 21 - Wires and Cables (0-1000 V), sized in accordance with manufacturer's recommendations.

Part 3 EXECUTION

3.1 EXAMINATION

.1 Verification of Conditions: verify that conditions of substrate previously installed under other Sections or Contracts are acceptable for emergency lighting installation in accordance with manufacturer's written instructions.

.1 Visually inspect substrate in presence of Departmental Representative.

.2 Inform Departmental Representative of unacceptable conditions immediately upon discovery.

.3 Proceed with installation only after unacceptable conditions have been remedied and after receipt of written approval to proceed from Departmental Representative.

3.2 INSTALLATION

.1 Install unit equipment and remote mounted fixtures.

.2 Direct heads.

.3 Connect exit lights to unit equipment.

3.3 CLEANING

.1 Progress Cleaning: clean in accordance with Section 01 74 11 - Cleaning.

.1 Leave Work area clean at end of each day.

3.4 PROTECTION

.1 Protect installed products and components from damage during construction.

.2 Repair damage to adjacent materials caused by emergency lighting installation.

END OF SECTION

Part 1 General

1.1 RELATED REQUIREMENTS

.1 Section 26 05 00 Common Works Results for Electrical.

1.2 REFERENCES

.1 Canadian Standards Association (CSA International)
  .1 CSA C22.2 No.141-10, Emergency Lighting Equipment.
  .2 CSA C860-11, Performance of Internally-Lighted Exit Signs.
.2 National Fire Protection Association (NFPA)
  .1 NFPA 101-2006, Life Safety Code.
.3 National Building Code
  .1 Latest version and associated reference.

1.3 ACTION AND INFORMATIONAL SUBMITTALS

.1 Provide submittals in accordance with Section 01 33 00 - Submittal Procedures.

Part 2 PRODUCTS

2.1 STANDARD UNITS

.1 Exit lights: to CSA C22.2 No.141 and CSA C860.
.2 Model #’s as indicated on the drawing.

Part 3 EXECUTION

3.1 MANUFACTURER 'S INSTRUCTIONS

.1 Compliance: comply with manufacturer's written recommendations or specifications, including product technical bulletins, handling, storage and installation instructions, and datasheets.

3.2 INSTALLATION

.1 Install exit lights to manufacturer's recommendations, listing requirements, NFPA standard and local regulatory requirements.
.2 Connect fixtures to exit light circuits.
.3 Connect emergency lamp sockets to emergency circuits.
.4 Ensure that exit light circuit breaker is locked in on position.

3.3 CLEANING

.1 Proceed in accordance with Section 01 74 11 - Cleaning.
.2 On completion and verification of performance of installation, remove surplus materials,

excess materials, rubbish, tools and equipment.

END OF SECTION

1 GENERAL

1.1 RELATED REQUIREMENTS

.1 Section 26 05 00 Common Works Results for Electrical.

.2 Section 27 05 28 – Pathways for Communications System

1.2 REFERENCES

.1 American National Standards Institute:

.1 ANSI J-STD-607-A2002, Joint Standard – Commercial Building (Earthing) and Bonding Requirements for Telecommunications.

.2 Telecommunications Industries Association (TIA) / Electronic Industries Alliance (EIA).

.1 TIA/EIA-606-2002, Administration Standard for the Commercial Telecommunications Infrastructure.

.3 U.S. Department of Labor/Occupational Safety and Health Administration (OSHA).

.1 Nationally Recognized Testing Laboratory (NRTL).

1.3 SYSTEM DESCRIPTION

.1 Telecommunications grounding and bonding system consist of grounding busbars, bonding backbones, and other bonding conductors.

.2 Provides ground reference for telecommunications systems within building and bonding to it of telecommunications grounding and bonding system.

.3 Metallic pathways, cable shields, conductors, and hardware within telecommunications spaces are bonded to telecommunications grounding and bonding system.

2 PRODUCTS

.1 One insulated pre-drilled, electro tin plated copper busbar, minimum dimensions of 6mm thick x 100mm wide and sized in length to accommodate 50% growth.

3 EXECUTION

.1 A green jacketed stranded copper ground wire sized to maintain a voltage drop of less than 40 volts under maximum short time rating. The wire shall be sized no smaller than #6 AWG no larger than a 3/0 and be provided from the electrical service equipment (power) ground (Main Building Ground) to the TMGB in the MTR.

.2 The insulated pre-drilled, electro tin plated copper busbar, minimum dimensions of 6mm thick x 100mm wide and variable in length, shall be installed on the wall of the MTR adjacent to the entrance conduits, 150mm from the corner of the MTR and 150mm AFF. This busbar is known as the Telecommunications Main Grounding Busbar (TMGB) and shall be insulated from its support by a minimum of 50mm.

.3 The Bonding Conductor for Telecommunications (BCT) shall be connected to the TMGB in the MTR. The connection to the TMGB shall be completed using a 2-hole electro tin plated compression lug. All joints to the BCT shall be done using irreversible compression type connectors, exothermic welding or equivalent.

.4 The BCT shall be connected to the service equipment (power) ground (main building ground) by qualified personnel and in accordance with the Canadian Electrical Code (CEC) and TIA/EIOA-607-B.

.5 Provide one green #6 AWG stranded ground wire with proper mounting hardware (double lug) from each of the communication racks (no daisy chaining) to the TMGB in the MTR.

.6 All metallic parts of the cable distribution supporting system shall be bonded together mechanically, including all transition points (cable tray and distribution conduit not mechanically connected) using a #6 AWG green jacketed stranded copper ground wire. The metallic components of the cable distribution system shall be bonded together at the TMGB in the MTR.

.7 All joints and to the grounding wires shall be done with irreversible compression-type connectors, exothermic welding or equivalent.

.8 Aluminum wires, clamps or terminal connectors are not acceptable for grounding and bonding.

.9 Ensure that metal to metal contact is made when grounding to paint or powder coated surfaces for all data racks and patch panels.

.10 Bonding conductors shall be a continuous and routed in the shortest possible straight line path. Any bends placed in the connector shall be sweeping bends.

.11 A yellow ground tag to be supplied and installed by division 26 at the TMGB in the MTR that states the following “IF THIS CONNECTOR OR CABLE IS LOOSE OR MUST BE REMOVED. PLEASE CONTACT EXT 6511”. Verify with Departmental Representative on the correct extension if different from above.

.12 The Communication Cabling Contractor shall supply and install all equipment along with any material required in this section.

.13 The Communication Cabling Contractor shall provide installers trained in the applicable codes, standards, regulations and installation standards.

.14

END OF SECTION

1 GENERAL

1.1 RELATED REQUIREMENTS

.1 Section 26 05 00 Common Works Results for Electrical.

.2 Section 27 05 28 – Pathways for Communications System

1.2 SYSTEM DESCRIPTION /SCOPE OF WORK

.1 Provide conduit raceways with pull cords for all new data cabling required for the projects.

.2 All new cabling shall be provided by SSC.

.3 Remove all existing data cabling and conduit made redundant by the renovation.

.4 Empty telecommunications raceways system consists of outlet boxes, cover plates, distribution cabinets, conduits, cabletroughs, pull boxes, sleeves and caps, fish wires, service poles, services fittings, concrete encased ducts.

2 PRODUCTS

.1 All conduits shall be thin wall EMT, reamed and bushed at both ends and bonded to the distribution system. Rigid PVC or flexible metallic or PVC conduits are not acceptable.

3 EXECUTION

.1 Accessories such as fittings, elbows, reducers etc shall be manufactured by the same cable tray manufacture.

.2 Minimum clearances for cable trays are as follows:

- .1 Install trays at least 300mm away from fluorescent luminaries and crossing power cables at right angles;
- .2 Minimum of 150mm vertical clearance from the top of the cable trays installed in tiers except where cables of 50mm in diameter or greater are installed then the clearance shall be 300mm;
- .3 Minimum of 300mm vertical clearance from the top of the cable trays to all ceilings, heating ducts, heating equipment and 150mm for short length obstructions.
- .4 Minimum of 600mm horizontal clearance from the side of the cable tray mounted adjacent to each other or to walls or obstructions; and
- .5 Clearances for cable trays shall be in accordance with the Canadian Electrical Code C22.1-09.

.3 The inside radius of a bend in a conduit shall

not be less than six times the internal diameter when the conduit is less than 50mm in diameter and ten times the internal diameter when the conduit is 50mm or larger.

.4 All zone conduits shall be identified and labelled at both ends. Tags shall identify the start and finish of conduit runs. Pull boxes shall be labelled on the exposed exterior.

.5 The telecommunication system shall be labelled green from end to end on conduits and at pull boxes.

.6 All conduits shall originate and be physically connected to the MTR backboards, cable tray and pull boxes.

.7 All fittings, connectors and couplings are to be steel.

.8 All conduits entering or exiting through the ceilings or walls of the MTR shall protrude into the room between 25-50mm.

.9 All conduit runs shall follow the building grid lines and shall be concealed where possible.

.10 Unless otherwise specified, all conduit runs shall be a maximum of 30 meters (100 feet) in length with a maximum of two ninety degree bends between pull boxes.

.11 A pull box shall be placed in conduit runs where the sum of the bends exceeds 180 degrees, where the overall length of the conduit run is more than 30m, or if there is a reverse bend in the run.

.12 In all instances pull boxes shall be placed in straight sections of a conduit run and shall not be used in lieu of a bend. Corresponding ends of the conduit are to be aligned with each other. Conduit fittings or pull elbows fittings shall not be used in place of pull boxes or bends.

.13 Pull boxes shall be installed at a reasonable height, in an exposed location and such that access for the installation of cables is not prohibited. Pull boxes shall not be placed Pull boxes shall not be placed in a fixed false ceiling space, unless immediately above a suitably marked and hinged access panel.

.14 Provide and install 1″ diameter green dot decals on the ceiling T-bar rail showing

location of pull box.

.15 Pull boxes shall be constructed and sized in accordance with the Canadian Electrical Code and TIA/EIA standards of gauge steel and shall have a rust resistant finish.

.16 Place pull boxes in readily accessible locations only.

.17 Locations and sizes of all pull boxes shall be indicated on the design submission.

.18 Pull boxes shall be placed in straight sections of a conduit run and shall not be used in lieu of a bend. Corresponding ends of the conduit arte to be aligned with each other. Conduit fittings or pull elbow fittings shall not be used in place of pull boxes or bends.

.19 All conduits shall be installed in accordance with the Canadian Electrical Code, Part 1 Section 12, applicable building codes and in accordance with TIA/EIA 569-B.

.20 The use of C, LB, LL, LR and T type fittings or elbows fittings is not permitted.

.21 Conduits ending in the vicinity of a cable tray shall be terminated at a height of no less than 100mm and no more than 150mm from the top of the cable tray. Conduit runs shall not be punched through the side of the cable tray. Conduit ends are to be bonded to the cable tray. Installer is to ensure that the bonding cable is secured to the outside of the cable tray.

.22 The minimum size (inside diameter) for EMT conduit running between the MTR and the multimedia outlet location is twenty five millimeters (25mm).

.23 EMT conduit sizes are 1″ emt conduit for one MMO (4 cables), 1-1/4″ emt conduit for two MMO (8 cables) and 2″ emt conduit for 4 MMO (16 cables).

.24 Cable fill capacities of conduit, cable tray and raceways shall not be greater than 40%.

.25 A pull cord or fish tape shall be installed in all conduits.

.26 Conduit must enter the outlet boxes from the top or bottom.

.27 Double gang, minimum 100mm x 100mm x 54mm deep and flush mounted in all areas.

.28 The outlet boxes shall be installed in the locations identified on the drawing. The outlet box shall be installed at 300mm AFF or at the same height and within 300mm of the adjacent electrical duplex receptacles, unless otherwise noted on the drawings. Wherever possible, the face of the plastic ring should be installed flush with the finished wall.

.29 Back to back outlet boxes shall not be used.

.30 Outlet boxes must be equipped with a plaster ring to accommodate the installation of the multimedia faceplate.

.31 Plaster rings will be specified as a single or double gang to accommodate cabling requirements.

.32 Plaster rings or raised adapter plates shall not reduce the size of the outlet such that two additional outlets could not be added in the future.

.33 Quality and workmanship shall be at the highest of professional tradesman levels to be accepted for completion.

END OF SECTION

Part 1 GENERAL

1.1 RELATED REQUIREMENTS

.1 Section 26 05 00 Common Works Results for Electrical.

1.2 SYSTEM DESCRIPTION / SCOPE OF WORK

.1 Provide a complete security system as specified herein and as detailed on the drawings.

.2 Portions of the work related to the security system must be provided by a dedicated subconsultant Underwriters Security Controls Incorporated. (Contact Mr. Paul Georges 416-410-7733; email: paulg@purnrg.ca)

.3 Underwriters Security Controls Incorporated (USC) will undertake the following:

.1 Supply and install all cabling related to the security system

.2 Supply and install all card readers

.3 Supply strikes and door contracts to the contractor to install

.4 Provide all terminations

.5 Test & verify the system operation.

.4 This contractor will:

.1 Provide all raceways, conduit, pull boxes, back boxes, pull wires, etc. required to facilitate the installation of the security system and devices.

.2 Confirm back box requirements for all devices with USC

.3 Install strikes and door contacts supplied by USC

.4 Where new devices are to be installed in existing surfaces provide all cutting and patching necessary to recess conduit and devices and restore surfaces to match existing conditions.

.5 Confirm termination point (i.e. data gathering panel location) with USC prior to starting rough in of the conduit

.6 Provide rough in of conduit to the fire alarm control panel.

1.3 REFERENCES

.1 NFPA 70 – National Electrical Code

.2 Ul294 – Standard for Access Control Systems

.3 NFPA 72 – National Fire Alarm Code

.4 NFPA 101 – Life Safety Code

1.4 REGULATORY REQUIREMENTS

.1 System shall be UL-Listed

1.5 Submittals

.1 Submit under provisions of Section 01300.

.2 Manufacturer's Data:

.1 Submit three (3) copies of:

.1 Product Data Sheets.

.2 Installation Instructions.

.2 Authorized Dealer Certificate and Certified Training Certificates of installers who will be working on this project.

.3 Shop Drawings:

.1 Submit three (3) copies and digitally in AutoCAD 14 or later format on a CD (3 copies), shop drawings, including:

.1 Layout of equipment on supplied AutoCAD drawings.

.2 Security Console elevation drawings.

.3 Field Controller equipment location wall layouts, including size requirements.

.4 Detailed wiring diagrams of Field Controllers, Door Details, and head-end devices.

.5 Load calculations of all security equipment for proper sizing of electrical provided by the customer and standby emergency generator circuits.

.4 Selection Samples: For each finish product specified, two complete sets of color chips representing manufacturer's full range of available colors and patterns.

.5 Verification Samples: For each finish product specified, two samples, minimum size 6 inches

.6 (150 mm) square, representing actual product, color, and patterns.

.7 As-Built Drawings:

.1 Update Shop Drawings to create final As-Built Drawings. Submit 3 copies and digitally in AutoCAD 14 or later format on a CD (3 copies).

.8 Operation Data: Include three (3) copies of the software Administrator and Operator

Manuals.

.9 Maintenance Data: Include maintenance and repair procedures.

1.6 WARRANTY AND SERVICE AGREEMENT

.1 All equipment, materials, and labor shall be guaranteed for a period of 24 months from the date of final acceptance by the Owner.

.2 Provide any software maintenance updates or upgrades at no additional cost to the Owner for this period.

.3 Perform two (2) scheduled preventative maintenance site visits per year during the warranty period.

.4 Response Times- Normal business hours shall be 7 AM to 5 PM Monday through Friday. Calls for service before noon shall be responded to on-site before the end of the day. Calls after noon shall be responded to on-site by noon the following business day.

.5 Provide extra costs for time outside of normal business hours if the Owner requires emergency service.

.6 Submit an all-inclusive Annual Maintenance Agreement cost for years 3 and 4, including two(2) preventative maintenance sites visits per year.

.7 Submit normal and after hours labor costs and typical costs for equipment for items not covered under the Warranty, like: Acts of God, vandalism, misuse.

PART 2 PRODUCTS

.1 All conduits shall be thin wall EMT, reamed and bushed at both ends and bonded to the distribution system. Rigid PVC or flexible metallic or PVC conduits are not acceptable.

PART 3 EXECUTION

3.1 INSTALLATION OF RACEWAYS

.1 The inside radius of a bend in a conduit shall not be less than six times the internal diameter when the conduit is less than 50mm in diameter and ten times the internal diameter when the conduit is 50mm or larger.

.2 All zone conduits shall be identified and labelled at both ends. Tags shall identify the start and finish of conduit runs. Pull boxes shall be labelled on the exposed exterior.

.3 The telecommunication system shall be labelled green from end to end on conduits and at pull boxes.

.4 All conduits shall originate and be physically connected to the MTR backboards, cable tray and pull boxes.

.5 All fittings, connectors and couplings are to be steel.

.6 All conduit runs shall follow the building grid lines and shall be concealed where possible.

.7 Unless otherwise specified, all conduit runs shall be a maximum of 30 meters (100 feet) in length with a maximum of two ninety degree bends between pull boxes.

.8 A pull box shall be placed in conduit runs where the sum of the bends exceeds 180 degrees, where the overall length of the conduit run is more than 30m, or if there is a reverse bend in the run.

.9 In all instances pull boxes shall be placed in straight sections of a conduit run and shall not be used in lieu of a bend. Corresponding ends of the conduit are to be aligned with each other. Conduit fittings or pull elbows fittings shall not be used in place of pull boxes or bends.

.10 Pull boxes shall be installed at a reasonable height, in an exposed location and such that access for the installation of cables is not prohibited. Pull boxes shall not be placed Pull boxes shall not be placed in a fixed false ceiling space, unless immediately above a suitably marked and hinged access panel.

.11 Provide and install 1” diameter green dot decals on the ceiling T-bar rail showing location of pull box.

.12 Pull boxes shall be constructed and sized in accordance with the Canadian Electrical Code and TIA/EIA standards of gauge steel and shall have a rust resistant finish.

.13 Place pull boxes in readily accessible locations only.

.14 Locations and sizes of all pull boxes shall be indicated on the design submission.

.15 Pull boxes shall be placed in straight sections of a conduit run and shall not be used in lieu of a bend. Corresponding ends of the conduit

arte to be aligned with each other. Conduit fittings or pull elbow fittings shall not be used in place of pull boxes or bends.

.16 All conduits shall be installed in accordance with the Canadian Electrical Code, Part 1 Section 12, applicable building codes and in accordance with TIA/EIA 569-B.

.17 The use of C, LB, LL, LR and T type fittings or elbows fittings is not permitted.

.18 Conduits ending in the vicinity of a cable tray shall be terminated at a height of no less than 100mm and no more than 150mm from the top of the cable tray. Conduit runs shall not be punched through the side of the cable tray. Conduit ends are to be bonded to the cable tray. Installer is to ensure that the bonding cable is secured to the outside of the cable tray.

.19 Cable fill capacities of conduit, shall not be greater than 40%.

.20 A pull cord or fish tape shall be installed in all conduits.

.21 Conduit must enter the outlet boxes from the top or bottom.

.22 Double gang, minimum 100mm x 100mm x 54mm deep and flush mounted in all areas.

.23 The outlet boxes shall be installed in the locations identified on the drawing. The outlet box shall be installed at 300mm AFF or at the same height and within 300mm of the adjacent electrical duplex receptacles, unless otherwise noted on the drawings. Wherever possible, the face of the plastic ring should be installed flush with the finished wall.

.24 Back to back outlet boxes shall not be used.

.25 Outlet boxes must be equipped with a plaster ring to accommodate the installation of the multimedia faceplate.

.26 Plaster rings will be specified as a single or double gang to accommodate cabling requirements.

.27 Plaster rings or raised adapter plates shall not reduce the size of the outlet such that two additional outlets could not be added in the future.

.28 Quality and workmanship shall be at the highest of professional tradesman levels to be accepted

for completion.

3.2 FIELD QUALITY CONTROL

.1 Test in accordance with NFPA 72-Natonal Fire Alarm Code

.2 Test in accordance with Hirsch Electronics Testing procedures for “Velocity Security Management System”.

3.3 TRAINING

.1 Supplier (USC) shall coordinate with the System Administrators for two 8 hour Operator training sessions on the Operational System to be conducted on-site on the actual running system.

3.4 MANUFACTURER’S FIELD SERVICES

.1 Provide USC’s field services for final system checkout and acceptance testing as required.

END OF SECTION

Part 1 GENERAL

1.1 RELATED REQUIREMENTS

.1 Section 26 05 00 Common Works Results for Electrical.

1.2 REFERENCES

.1 Health Canada/Workplace Hazardous Materials Information System (WHMIS)
  .1 Material Safety Data Sheets (MSDS
.2 Underwriter's Laboratories of Canada (ULC)
  .1 CAN/ULC-C22.1-12 Canadian Electrical Code Part 1 21st Edition.
  .2 CAN/ULC-S524-06, Standard for the Installation of Fire Alarm Systems.
  .3 CAN/ULC-S525-07, Audible Signal Device for Fire Alarm Systems.
  .4 CAN/ULC-S526-07, Visual Signal Devices for Fire Alarm Systems.
  .5 CAN/ULC-S527-99, Control Units.
  .6 CAN/ULC-S528-05, Manual Pull Stations for Fire Alarm Systems.
  .7 CAN/ULC-S529-02, Smoke Detectors for Fire Alarm Systems.
  .8 CAN/ULC-S530-91, Heat Actuated Fire Detectors for Fire Alarm Systems.
  .9 CAN/ULC-S531-02, Standard for Smoke Alarms.
  .10 CAN/ULC-S536 -2004, Installation and Testing of Fire Alarm System.
  .11 CAN/ULC S537-2004, Verification of Fire Alarm Systems.
  .12 CAN/ULC S561 Installation and Services for Fire Signal Receiving Centres and System.
.3 Provincial Building and Fire Codes.
.4 Local Regulations and.

1.3 ACTION AND INFORMATIONAL SUBMITTALS

.1 Product Data:
  .1 Submit manufacturer's printed product literature, specifications and datasheet in accordance with Section 01 33 00 - Submittal Procedures.
.2 Shop Drawings:
  .1 Submit shop drawings in accordance with Section 01 33 00 - Submittal Procedures.
    .1 Shop drawings: stamped and signed by professional engineer registered or licensed in Province of Ontario, Canada.
  .2 Include:
    .1 A complete and detailed description of

the following:

.1 Sequence of operation;

.2 Installation instructions;

.3 Description of each type of *field device;*

.4 Details of input to programmed output functions for programmed systems;

.2 Building plan that shows:

.1 Fire alarm zoning;

.2 Device address and location of said device, including fault alarm modules, ancillary devices and annunciators.

.3 Block wiring diagram indicating the interconnection of the field devices, control units, transponders, annunciators, ancillary devices and power supplies, external to central units or transponders.

.4 The following information must also be provided:

.1 Instructions for resetting the system and silencing alarm signals;

.2 Instructions for silencing the trouble signal and action to be taken when the trouble signal sounds;

.3 Description of the area of fire zone protected by each alarm detection circuit (this may be in the form of a list or plan drawing);

.4 Description of ancillary devices controlled by the fire alarm system;

.5 Equipment operating instructions or manuals; and

.6 Equipment maintenance or testing instructions.

.3 Quality assurance submittals: submit following in accordance with Section 01 33 00 - Submittal Procedures.

.1 Certificates: submit certificates signed by manufacturer certifying that materials comply with specified performance

characteristics and physical properties.

.2 Instructions: submit manufacturer's installation instructions.

.3 Manufacturer's Field Reports: manufacturer's field reports specified.

.4 Closeout Submittals:

.1 Authority of Jurisdiction will delegate authority for review and approval of submittals required by this Section.

.2 Submit to Authority of Jurisdiction 2 sets of approved submittals and drawings immediately after approval but no later than 15 working days to prior to final inspection.

.3 Submit following:

.1 Manufacturer's Data for:

.1 Manual pull stations.

.2 Heat detectors.

.3 Open-area smoke detectors.

.4 Alarm horns.

.5 Visible appliances.

.6 Trouble bell or buzzer.

.2 System wiring diagrams:

.1 Submit complete wiring diagrams of system showing points of connection and terminals used for electrical connections in the system.

.2 Show modules, relays, switches and lamps in control panel.

.3 Design data: Power Calculations:

.1 Submit design calculations to substantiate that battery capacity exceeds supervisory and alarm power requirements.

.2 Show comparison of detector power requirements per zone versus control panel smoke detector power output per zone in both standby and alarm modes.

.3 Show comparison of notification appliance circuit alarm power requirements with rated circuit power output.

.4 Schedules:

.1 Conductor wire marker schedule.

.5 Test Reports:

.1 Open-area 2-wire smoke detectors.

.2 Preliminary testing:

.1 Final acceptance testing.

.2 Submit for inspections and tests specified under Field Quality Control.

1.4 SCOPE OF WORK

.1 The building currently has an Edwards EST 3 fire alarm system.

.2 Relocate existing devices and provide new devices compatible with the existing system as shown on the drawings.

.3 The building will be occupied at all times during construction.

.4 Coordinate shut downs of the fire alarms as convenient to and approved by the Client. This may require night shift work to accommodate normal working activities within the building.

.5 As noted, the construction work is in phases. At the end of each phase of the constriction provide a full testing and verification report of the system and have such testing and confirm certified by the Authority Having Jursidiction.

1.5 QUALITY ASSURANCE

.1 Qualifications:

.1 Installer: company or person specializing in fire alarm system installations. .

.2 Provide services of representative or technician from manufacturer of system, experienced in installation and operation of type of system being provided, to supervise installation, adjustment, preliminary testing, and final testing of system and to provide instruction to project personnel.

.3 Maintenance Service:

.1 Provide one year's free maintenance with one inspection by manufacturer during warranty period. Inspection tests to conform to CAN/ULC-S536. Submit inspection report to Departmental Representative.

Part 2 PRODUCTS

2.1 OPERATIONS

.1 The sequence of operation shall be uninterrupted in its current conduit but shall be tested and verified at the end of each phase of construction.

2.2 SYSTEM CONFIGURATION

.1 General

.1 All Life Safety System equipment shall be arranged and programmed to provide the early detection of fire, the notification of building occupants, the automatic summoning of the local fire department, and the activation of other auxiliary systems to inhibit the spread of smoke and

fire, and to facilitate the safe evacuation of building occupants.

.2 General

.1 The fire alarm system is a microprocessor based addressable system.

.3 Wiring

.1 Wiring to all initiating and signaling devices shall be Class A.

.4 Data Communications Link (DCL)

.1 When a data communications link (DCL) covers more than one fire/smoke compartment, a wire-to-wire short shall not affect the operation of the circuit from the other fire/smoke compartments.

.2 The DCL connecting addressable/analog devices shall be capable of sharing the same pair of wires for: smoke and motion detectors, monitor modules, isolation modules and notification circuit modules. The DCL shall be wired Class A.

.3 The signaling line circuit connecting to the network audio communications shall be Class A. The circuit shall be power limited.

.5 Wiring

.1 Utilize FAS wire only for all fire alarm wiring.

2.3 PANEL COMPONENTS & FUNCTIONS

.1 General

.1 Fire Control:

.1 The control panel is a multi-processor based networked system designed specifically for fire, one-way emergency audio communications, smoke control.

2.4 FIELD MOUNTED SYSTEM COMPONENTS

.1 Fire Initiating Devices

.1 Smoke Detectors & Accessories

.1 Detectors - Photoelectric Smoke Detector:

.2 Photoelectric detector shall utilize a light scattering type photoelectric smoke sensor to detect visible particulates produced by combustion. The integral microprocessor shall dynamically examine values from the sensor and initiate a system alarm based on the analysis of data. The alarm set point shall be field

selectable to any of five sensitivity settings ranging from 1.0% to 3.5% smoke obscuration per foot. The photo detector shall be suitable for operation in the following environment:

- Temperature: 32°F to 120°F (0°C to 49°C)
- Humidity: 0-93% RH, non-condensing
- Elevation: no limit

.2 Detector Bases:

.1 Mounting bases shall support all microprocessor-based detector types detailed in this specification

.2 Removal of the respective detector shall not affect communications with other addressable devices.

.3 Field wiring connections shall be made to the room side of the base, so that wiring connections can be made or disconnected by the contractor without the need for remove the mounting base from the electrical box. Bases will have the option of external LED operation, Relay Base or

.4 Data Line Isolator Base.

.3 Detector Base:

.1 The relay base shall support all Addressable Detector types and have the following requirements:

.2 Form "C" contacts rated at 1 amp @ 30VDC and listed for "pilot duty". The position of the contact shall be supervised

.3 The relay shall automatically de-energize when a detector is removed The relay operation shall be exercised by the detector processor on power up.

.4 The relay shall be a bi-stable type and selectable for normally open or normally closed operation.

.5 For added survivability, relay operation shall be controlled by the detectors microprocessor. The relay shall be capable or operation in the conventional stand-alone mode in the

event communication is lost with the loop controller. Relay bases not controlled by the detector's microprocessor shall not be acceptable.

.4 Isolator:

.1 The isolator shall have the following requirements:

.2 The isolator shall operate within a minimum of 23msec of a short circuit condition on the analog communication wiring.

.3 In a Class A configuration, the analog loop controller shall identify an isolated circuit condition and provide communications to all non-isolated analog devices.

.4 Isolators are required between all Floor Areas as defined in the NBC.

.5 Microprocessor Based Intelligent Modules

.1 General:

.1 Fire Alarm I Life Safety System shall incorporate microprocessor-based addressable modules for the monitoring and control of system Input and Output functions over a 2 wire electronic communications loop, using both broadcast and serial polling protocols. All modules shall display communications and alarm status via LED indicators.

.2 The function of each connected module shall be determined by the module type, and shall be defined in the system software through the application of a personality code.

.3 All addressing of the Microprocessor-based Addressable Modules shall be done electronically, and the electrical location of each module shall be automatically reported to the Fire Alarm Control Panel, where it may be downloaded into a PC, or printed out. The addressing of the modules will not be dependent on their electrical location on the circuit.

.4 All field wiring to the Microprocessor-based Addressable Modules shall be supervised for opens and ground faults and shall be location identified to the module of incidence,

.5 Diagnostic circuitry, and their associated indicators, with reviewable Trouble Codes, shall be integral to the Microprocessor-based Addressable Modules to assist in troubleshooting system faults.

.6 Each module shall be suitable for operation in the following environment: Temperature: 32°F to 120°F (0°C to 49°C)

.7 Humidity: 0-93% RH, non-condensing

.2 Single Input Module:

.1 Microprocessor-based Addressable Modules shall be used to provide one (1) supervised Class B (style B) input circuit capable of latching operation for use with contact devices, non-damped Waterflow Switches, non-latching supervisory sprinkler switches.

.3 Dual Input Module:

.1 Microprocessor-based Addressable Modules shall be used to provide two (2) independent supervised Class B (style B) input circuits capable of

.2 operation with contact devices. Both of the input circuits shall be terminated to, and operated from, the same microprocessor-based addressable module.

.3 Modules configured for Waterflow operation shall have an automatic delay of 15 seconds before reporting the Waterflow alarm condition to the Fire Alarm Control Panel. The module shall monitor sprinkler supervisory switches and shall automatically report the supervisory function to the Fire Alarm Control Panel each time the associated dry contact closes.

.4 Monitor Module:

.1 The Microprocessor-based Addressable Monitor Module shall be factory set to support one (1) supervised Class B Normally-Open Active NonLatching Monitor circuit. The module shall automatically report the monitor function to the Fire Alarm Control Panel each time the associated dry contact closes.

.2 Riser Select Signal Module:

.1 The Microprocessor-based Addressable Riser Select Signal Modules shall be capable of selecting from one or two 24Vdc risers and connecting to one (1) supervised 2A Class B (style Y) Notification Appliance Output Circuit

.3 Control Relay Module:

.1 Microprocessor-based Addressable Control Relay Modules shall provide one form "C" dry relay contact rated at 2 amps @ 24 Vdc or 0.5 amps at 120 VAC to, control external appliances or equipment processes. The control relay module shall be rated for pilot duty applications. The position of the relay contact shall be confirmed by the system firmware.

.4 Universal Class AIB Module:

.1 The Microprocessor-based Addressable Module Universal Class AIB Module shall be capable of a minimum of fifteen (15) distinct operations. The universal class NB module shall support one of the following circuit types:

.1 Supervised Class AIB Normally-Open Alarm (Active) (Delayed) (Non-) (Latching).

.2 Form "C" dry relay contact rated at 2 amps @ 24 Vdc.

.3 Supervised Class AIB 2-wire

Smoke Alarm (Verified)

.4 Supervised Class AIB, Signal Circuit, 24Vdc @ 2A

.2 Microprocessor Based Addressable Manual Pull Stations

.1 Fire Alarm I Life Safety System shall incorporates single stage microprocessor-based addressable Manual Pull Stations connected over a 2 wire electronic communications loop, using both broadcast and serial polling protocols. All Manual Pull Stations shall display communications and alarm status via LED's mounted on their integral, factory-assembled module.

.2 All addressing of the Manual Pull Stations shall be done electronically, and the electrical location of each station shall be automatically reported to the Fire Alarm Control Panel, where it may be downloaded into a PC, or printed out. The addressing of the Manual Pull Station will not be dependent on their electrical location on the circuit.

.3 Stations shall be finished in red with silver "PULL IN CASE OF FIRE" lettering. The manual station shall be suitable for mounting on a North American 1-½" (38mm) deep, 4" square electrical box with /2" (13mm) raised cover.

.4 All Manual Fire Alarm station shall be suitable for operation in the following environment:

.5 Temperature: 32°F to 120°F (0°C to 49°C)

.6 Humidity: 0-93% RI-I, non-condensing

.3 Notification Appliances

.1 General:

.1 All appliances which are supplied for the requirements of this specification shall be ULC Listed.

.2 All appliances shall be of the same manufacturer as the Fire Alarm Control Panel specified to insure absolute compatibility between the appliances and the control panels, and to insure that the application of the appliances are done in accordance with the single manufacturer's instructions.

.3 Any appliances that do not meet the

above requirements, and are submitted for use must show written proof of their compatibility for the purpose intended, Such proof shall be in the form of documentation from all manufacturers that clearly states that their equipment (as submitted) is 100% compatible with each other for the purpose intended.

.2 Self-Synchronized Strobes:

.1 The strobe shall be selectable for a continuous or temporal synchronized flash rate.

.2 The strobe output shall be synchronized and shall be a minimum 110 candela (cd). The light output shall be an even "Full Light" pattern throughout the strobes protected area. Strobes utilizing a traditional specular reflector with uneven light distribution are not acceptable.

.3 The strobe shall be an ultra-low profile single gang design, finished in UV stable neutral white and shall not protrude more than 1" from the wall. All mounting hardware shall be captive and there shall be no mounting screws visible after the device is installed.

.4 The devices shall mount to a standard single gang electrical box and have an optional trim ring for 2-gang, octagonal or 4" square boxes. The signalling device series shall share a common appearance and be available in a combination horn/strobe or strobe unit as listed on the plans.

2.5 END-OF-LINE DEVICES

.1 End-of-line devices for all supervised circuits sized as necessary and mounted on electrical plates beyond the last device of a Class ‘B’ circuit.

Part 3 EXECUTION

3.1 MANUFACTURER 'S INSTRUCTIONS

.1 Compliance: comply with manufacturer's written recommendations or specifications, including product technical bulletins, handling, storage and installation instructions, and datasheet.

3.2 INSTALLATION

.1 Install systems in accordance with CAN/ULC-S524 and TB OSH Chapter 3-04.
.2 Install main control panel and connect to ac power supply, dc standby power.
.3 Locate and install manual alarm stations and connect to alarm circuit wiring.
.4 Locate and install detectors and connect to alarm circuit wiring. Do not mount detectors within 1 m of air outlets. Maintain at least 600 mm radius clear space on ceiling, below and around detectors. Locate duct type detectors in straight portions of ducts.
.5 Connect alarm circuits to main control panel.
.6 Locate and install signal devices and connect to signalling circuits.
.7 Connect signalling circuits to main control panel.
.8 Install end-of-line devices at end of alarm and signalling circuits.
.9 Install remote annunciator panels and connect to annunciator circuit wiring.
.10 Locate and install door releasing devices.
.11 Locate and install remote relay units to control fan shut down.
.12 Sprinkler system: wire alarm and supervisory switches and connect to control panel.
.13 Connect fire suppression systems to control panel.
.14 Wiring shall be permanently labelled at each end of the dry conductor

3.3 FIELD QUALITY CONTROL

.1 Site Tests:
  .1 Perform tests in accordance with Section 26 05 00 - Common Work Results for Electrical and CAN/ULC-S537.
  .2 Fire alarm system:
    .1 Test each device and alarm circuit to ensure manual stations, thermal smoke detectors, sprinkler system, Halon system, and transmit alarm to control panel and actuate first stage alarm or general alarm ancillary devices.
    .2 Check annunciator panels to ensure zones are shown correctly.
    .3 Simulate grounds and breaks on alarm and signalling circuits to ensure proper operation of system.
    .4 Class A circuits.
      .1 Test each conductor on circuits

for capability of providing alarm signal on each side of single open-circuit fault condition imposed near midmost point of circuit. Reset control unit after each alarm function and correct imposed fault after completion of each test.

.2 Test each conductor on circuits for capability of providing alarm signal during ground-fault condition imposed near midmost point of circuit. Reset control unit after each alarm function and correct imposed fault after completion of each test.

.5 Class B circuits.

.1 Test each conductor on circuits for capability of providing alarm signal on line side of single open-circuit fault condition imposed at electrically most remote device on circuit. Reset control unit after each alarm function and correct imposed fault after completion of each test.

.2 Test each conductor on circuits for capability of providing alarm signal during ground-fault condition imposed at electrically most remote device on circuit. Reset control unit after each alarm function and correct imposed fault after completion of each test.

.2 Manufacturer's Field Services:

.3 Obtain written report from manufacturer verifying compliance of Work, in handling, installing, applying, protecting and cleaning of product and submit Manufacturer's Field Reports as described in PART 1 - SUBMITTALS.

.4 Provide manufacturer's field services consisting of product use recommendations and periodic site visits for inspection of product installation in accordance with manufacturer's instructions.

.5 Schedule site visits, to review Work, as directed in PART 1 - QUALITY ASSURANCE.

.3 Verification requirements in accordance with Section 01 47 17 - Sustainable Requirements: Contractor's Verification, include:

.1 Materials and resources.

.2 Storage and collection of recyclables.

.3 Construction waste management.

.4 Resource reuse.

.5 Recycled content.

.6 Local/regional materials.

.7 Low-emitting materials.

3.4 TRAINING

.1 Arrange and pay for on-site lectures and demonstrations by fire alarm equipment manufacturer to train operational personnel in use and maintenance of fire alarm system.

.2 Allow for 2 x 8 hour training sessions

3.5 CLEANING

.1 Proceed in accordance with Section 01 74 11 - Cleaning.

END OF SECTION

APPENDICES

SNC•LAVALIN
O&M

Facility Orientation for Construction and Emergency Service Contractors

2301 Midland Ave
Toronto ON

Facility Manager:	***Dave Lazaros***	**Tel:**	**416-991-3358**
Property Services Coordinator:	***Kimberly McGuire***	**Tel:**	**416-991-5397**
Maintenance Supervisor:	***Constantin Dragotin***	**Tel:**	**416-991-3358**
Maintenance Team Leader:	***Tameash Persaud***	**Tel:**	**416-936-2964**
Health and Safety Coordinator	***Bill Smith***	**Tel:**	**613-847-2399**

SNC-Lavalin O&M
Feb 2010

SNC•LAVALIN
O&M

Facility Orientation for Construction and Emergency Service Contractors 2301 Midland Ave, Toronto, Ontario

SNC-Lavalin O&M and PWGSC have agreed that the following procedure will apply to all persons carrying out work at this site.

LIST IS NOT LIMITED TO THE ITEMS MENTIONED, AND MAY BE SUBJECT TO CHANGE WITHOUT NOTICE.

GENERAL

CLEANING OF WORK SITES: Each contractor is expected to clean the work area on an ongoing basis, and upon completion of the project. The building cleaners are not responsible for post construction clean-ups. The contractor is to arrange for proper cleaning of the site.

ELECTRICAL DISRUPTION/LOGBOOK: Arrangements for written authorization must be made a minimum of 48 hours in advance. On completion of any new or substantial electrical repair work, the electrical inspection logbook located at the entrance to the building must be filled out indicating the type of work completed. Also, provide a copy of a hydro inspection permit. Place copy in logbook as required.

EMERGENCY: In the event of an emergency (i.e.: fire, personnel accident, etc.) call 911. If fire is detected and you are not able to suppress it, pull nearest pull station located at each exit and evacuate. For floods and emergency shutoffs, call the PWGSC National Service Call Centre at 1-800-463-1850.

EXPLOSIVE TOOLS: Use of powder activated tools is strictly prohibited unless prior authorization is given in writing from the Property Manager.

FIRE ALARM BYPASSES: Arrangements for written authorization must be made with the Project Manager a minimum of 48 hours in advance.

FIRE EXTINGUISHERS/HOSES: Fire extinguishers and fire hoses are located throughout the building.

FIRE PLAN & EVACUATION: A copy of the evacuation plan indicating emergency exits are located at every fire hose cabinet in the building.

FREIGHT ELEVATOR: The freight elevator is available for use through arrangement with the Project Manager. Extensive use of the freight elevator(s) must be arranged 48 hours in advance. Maximum height is 12'. Government staff and suppliers are given priority for the use. Users are expected to follow proper operating/safety procedures and capacity limits posted. Cleaning staff have priority at the freight elevator from 6:00 pm to 8:30 pm.

SNC•LAVALIN
O&M

Facility Orientation for Construction and Emergency Service Contractors 2301 Midland Ave, Toronto, Ontario

HVAC: Arrangements for written authorization must be made through the MTL a minimum of 48 hours in advance, for any disruption to the Heating, Ventilation or Air Conditioning systems.

HEALTH AND SAFETY: There will be zero tolerance with respect to Health and Safety issues. Contractor(s) must adhere to all applicable federal and provincial Occupational Health and Safety regulations, use best safety practices at all times, and follow the rules governing this site. The principal contractor will be monitored and reported on their compliance.

HEALTH & SAFETY INCIDENT: Toll free CSC number to support the immediate Health & Safety incident notification process.

Supervisors please call the following to provide verbal notification and obtain advice in responding to a health & safety incident within PWGSC Buildings. O &M 1-866-771-1213.

A new "IRES Health & Safety Incident Notification" prompt has been added to the selection menu for both French and English callers.

HOLIDAY SCHEDULE: This facility recognizes all federal and provincial holidays, in addition to Remembrance Day on November 11th. (with the exception of Family Day)

HOURS OF OPERATION: Business hours are 7:00 am to 6:00 pm. If you require adjustments to the set schedules in order to perform your work, please make your requests to the Project Manager.

KEYS: Arrangements for written authorization must be made with Project Manager a minimum of 48 hours in advance. Security will not release keys to contractors without prior written consent from SNC-Lavalin O&M.

KNOWN HAZARDS: This facility is heated by natural gas. Existing material safety data sheets for substances in use on site are available. Designated substances reports are also available on site.

LOADING DOCK: The loading dock is for the loading and unloading of material only. Regular hours of operation are 8:30 am to 4:30 pm. After hours deliveries must be arranged with the MTL No storage is permitted by any person or Tenant.

NO SMOKING POLICY: Federal regulations do not permit smoking within the facility or near the entrance.

NOISE AND DRILLING: During the day, drilling is not permitted. Any work that will cause noise will be stopped.

SNC•LAVALIN
O&M

Facility Orientation for Construction and Emergency Service Contractors 2301 Midland Ave, Toronto, Ontario

ODORS/FUMES/OFF GASES: Any material/work that will cause or give off gases or odors and/or fumes is prohibited during working hours. SNC-Lavalin O&M must be notified of any potential work that could cause or give off gases or fumes.

PAINTING: **SNC-Lavalin O&M must be notified of all painting within the building.** No painting is permitted during occupied hours of 7:00 am to 6:00 pm.
Painting may commence at 6:00 pm. Ensure HVAC is running for specific floor being painted.

PARKING: Parking for contractors is restricted during occupied hours. One space may be provided for a contractor only. Additional parking may be arranged through the Project Manager and approved.

SECURITY/ESCORTS: Arrangements for written authorization must be made a minimum of 48 hours in advance. All contractors must satisfy security requirements, visibly wear building pass at all times, and be readily identifiable by company name. Security escorts may be required when working in certain areas. Regular hours of operation are between 7:30 am to 6:00 pm. Security requires the names of persons requiring entry, locations requiring access, start and anticipated length of stay, and completion date of the project. The Project Manager is the main point of contact for making all arrangements with the security office. Failure to cancel, overbook, or underutilized security escort personnel could result in the contractor being back charged a minimum of 4 hours labor, if 24 hours cancellation notice is not provided.

SIGNAGE: Bilingual graphic symbol hazard signage is to be posted on every job site warning workers and visitors of dangers in the area.

SMOKE DETECTORS: In confined spaces or areas where dust will interfere with the operation of smoke detectors, detectors must be covered to prevent alarming. It is the contractor's responsibility to prevent the false alarm of detectors. All expenses for the false alarm will be charged back to the contractor/tenant. Each fire truck will be billed at $300 per vehicle.

TOOL USE: All tools, equipment and machinery are to be provided by the contractor to carry out the tasks of the contracted work. Building, equipment and tools will not be on loan to any contractor/tenant.

WHMIS/MSDS: Workplace Hazard Management Information System (WHMIS) is to be followed and instructed to all contractor and subcontractor employees. Material safety Data Sheets (MSDS) are to be supplied prior or at the time all WHMIS regulated material arrives on site.

WASHROOMS: Washrooms are located on all floors. Contractors shall use only assigned washrooms.

SNC•LAVALIN
O&M

Facility Orientation for Construction and Emergency Service Contractors 2301 Midland Ave, Toronto, Ontario

WASTE REMOVAL: Unless otherwise specified, materials for removal become the contractor's property and shall be taken from site. No construction waste whatsoever is to be discarded in the building waste removal system(s). This facility is committed to industry best practices with respect to sustainable development of Reduce, Reuse and Recycle. All contractors are encouraged to abide by this whenever possible.

Please discuss the possibility of recycling construction materials with the SNC-Lavalin O&M Project Manager. Recycling centers for glass, cans, paper and cardboard are available throughout the facility for personal use. Construction bins shall be dropped off by 6:00 pm and picked up by 5:30 am.

WELDING/SOLDERING: Arrangements for written authorization must be made with Project Manager a minimum of 48 hours in advance. A "Hot Work Permit" must be issued following confirmation of specific details and arrangements.

NO UNAUTHORIZED DISRUPTION IN SERVICES

48 hours advance written authorization is required for all planned requirements for building access, key authorization, fire alarm by-passes, life safety, electrical, heating, ventilation and air conditioning systems.

Switching of electrical breakers, cutting drilling, welding/soldering, use of power tools, noise disturbances, and other unauthorized disruption of services are strictly forbidden. This facility is protected by sensitive heat & smoke detection and computer controlled systems. The contractor assumes all responsibility for unauthorized disruption to client operations.

Contractor Name: _____

Signature: _____ **Date:** _____

SNC•LAVALIN O&M

Facility Orientation for Construction and Emergency Service Contractors 2301 Midland Ave, Toronto, Ontario

SNC•LAVALIN O&M

2301 Midland Ave
Toronto,Ont

Revised Feb 18, 10
Tech: Tameash Persaud
Phone: 416-936-2964
Fax:

Facility Site Specific Hazard Assessment

PWGSC Building ID 5520178	***Portfolio Name*** ***PWGSC***
O&M Building ID W501339	Building Name ***Health Canada***

	Type of Hazard	Check (✓) All Applicable			Explanation of Hazard (If needed)	Controls currently in place
		Hazard Present	Applicable YES	Applicable NO		
1	Access to Facility and Project Area			X	Some traffic in parking lot	Watch as you are walking
2	Underground garage			X		
3	Hallways			X		
4	Tenant space	X			Some areas are designated BIO Hazards	Restricted access
5	Vehicle traffic on property			X		
6	Fire Exits clear and unobstructed		X			
7	Washrooms Locations		X			
8	Lighting		X			
9	Heating		X			
10	Fire Alarm Systems		X			

SNC•LAVALIN O&M

Facility Orientation for Construction and Emergency Service Contractors 2301 Midland Ave, Toronto, Ontario

	Type of Hazard	Check (✓) All Applicable			Explanation of Hazard (If needed)	Controls currently in place
		Hazard Present	Applicable YES	Applicable NO		
11	Fire Alarm Panel monitored		X			
12	Smoke detectors		X			
13	Heat Detectors		X			
14	Storage areas		X			
15	Certified Roof Anchors	X			On place on roof	Annual PM's and controlled access
16	Access Ladders	X			4 Fixed ladders in total, 1 Cooling tower, 1 Transformer Vault, 1 Exhaust Stack, 1 CCB at Annex	Controlled access
17	Pinch Points		X		Some machines in basement mechanical room	Guarded and proper LOTO in place.
18	Controlled Products		X		In designated areas and labelled per WHMIS and OHSA	Controlled access
19	Hazardous Substances		X		In designated areas and labelled per WHMIS and OHSA	Controlled access
20	Mould			X		
21	Asbestos Present		X		Some locations thorough building	Refer to AMP
22	Vibration			X		
23	Radiation			X		
24	Excavation	X			Building Evacuation and Hazardous Containment in place	Refer to building orientation by Building Tech or MTL
25	Overhead		X			

SNC•LAVALIN O&M

Facility Orientation for Construction and Emergency Service Contractors 2301 Midland Ave, Toronto, Ontario

	Type of Hazard	Check (✓) All Applicable			Explanation of Hazard (If needed)	Controls currently in place
		Hazard Present	Applicable YES	Applicable NO		
	Electrical					
26	Buried Utilities Requires Locating		X		Gas, telecommunications, hydro	Get detailed locations from authorized Utilities.
27	Uneven Surfaces			X		
28	Slippery Surfaces		X		Based upon seasons	Caution walking
29	Noise			X		
30	Confined Space SNC			X		
31	Confined Space PWGSC			X		
32	Oxygen deficient / enriched			X		
34	HVAC		X		Basement and Penthouse	Controlled access
35	Hot Work on/in Facility		X			By permit only
36	PCB's			X		
37	Roof		X			Controlled access
38	Mechanical		X			Controlled access
39	Electrical room		X			Controlled access
40	Electrical Panels		X			Controlled access
41	Elevator Machine room		X			Controlled access
42	Glycol system		X		Both Penthouse locations	Controlled access
43	Exterior			X		

SNC·LAVALIN O&M

Facility Orientation for Construction and Emergency Service Contractors 2301 Midland Ave, Toronto, Ontario

Reviewed By	Title	Telephone	Email
Signature		Fax	Date

The contractor agrees that he has been informed and agrees with all items identified above.

Contractor	Title	Telephone	Email
Signature		Fax	Date

CHANGE ANYTHING IN RED TO REFLECT YOUR OWN INFORMATION.....THIS IS ONLY A SAMPLE

Site Specific Health & Safety Plan

Insert Address

Project: PW ######

Section 1 Scope of Work

Insert your scope of work for the project

Section 2 SNC Lavalin O&M Contacts

Insert Name	Project Manager	**Insert Phone #**
Insert Name	Commissioning Manager	**Insert Phone #**
Insert Name	Facility Manager	**Insert Phone #**
Insert Name	Building Technician	**Insert Phone #**
Insert Name	Health & Safety Specialist / Coordinator	**Insert Phone #**

Section 3 Contractor Contacts

General Contractor - **Insert Contractor name**

Insert Name	Project Supervisor	**Insert Phone #**
Insert Name	Site Supervisor	**Insert Phone #**
Insert Name	Contractor H&S Rep	**Insert Phone #**

Sub Contractor - **Insert Sub Name**

Insert Name	Site Supervisor	**Insert Phone #**

Section 4 Hazard Control Measures

Insert Hazard Control Measures Pertinent to SCOPE of Project (ie communication with workers, MOL Phone number, etc)

FOR EXAMPLE

1) All personnel will have access to 2 way communication plus the use of a cellular telephone while on site

2) Ministry Of Labour Contact Number

3) Written rescue procedures: confined space, fall arrest

4) Traffic Control Plan

ETC.....

Section 5 Responsibilities of Contractor

General Contractor - **Insert Name**

The General Contractor shall remain responsible for:

- Keeping all of their own personnel, sub contractor's personnel and the facility manager's personnel advised as to their respective roles and informed as to the progress of the project.
- Coordination of all materials, personnel and duties needed to execute the contract as planned
- Communication with the Facility Manager and the sub trades with regards to accessing the areas of the building during and after normal working hours

Facility Manager - SNC Lavalin O&M

The Facility Manager shall remain responsible for:

- assisting the General Contractor and the sub trades in accessing all areas of the facility so as to allow completion of the project
- providing Hot Work Permits as and or if required
- coordinating and communicating with the building tenants with regards to site access and after hours working arraignments

Sub Trade - **Insert name**

The sub trade on this project shall remain responsible for:

- coordination of their respective work with the General Contractor
- communicating any and all problems with the General Contractor
- follow all codes, regulations and safe work practices as set out in the OHSA and in the Hazard Assessment provided for this project
- cleaning up the site on a daily basis to ensure that the work areas and general building are not encumbered by the project process

Section 6 Personnel Protection Equipment

All workers on the site are required to have the required PPE for the associated risks/hazards of the project.

Example

1. Hard Hat

2. Steel Toed Boots

3. etc

Section 7 Emergency Procedures - Nearest Hospital Location

The nearest hospital to this site is...

Directions:

INSERT MAP

Section 8 Evacuation Procedures

Become familiar with the work areas EVCAUTION PLANS

In case of EMERGENCY EVACUATION:

- if you are instructed to evacuate, leave the building immediately using the nearest safe exit, closing all doors behind you.
- Leave the area of danger immediately, closing any doors behind you
- Activate the red fire alarm pull station located near each exit stairwell door
- Advise other occupants and visitors in the immediate area
- **DO NOT USE THE ELEVATOR**
- If there are magnetic releases on any doors in the pathway to an exit, all exit door locks will release allowing egress. Some doors may be equipped with panic bars.
- If possible contact the local fire department (9-1-1) from an area of safety, giving the building address the floor number and location of the problem (Note: If these locks do not release immediately, you must push and hold for 15 seconds the locks will then release and allow you to exit.)
- do not attempt to fight a fire with a portable extinguisher unless:

  - ✓ You have been trained in the operation of the fire extinguisher
  - ✓ The fire is small (wastepaper basket or smaller)
  - ✓ The fire alarm has already been activated
  - ✓ You are between an exit and the fire

- If you encounter smoke in a stairwell, use an alternate stairwell and once outside the building:
  - ✓ remain clear of all exits and as far away from the building as possible
  - ✓ cross the street
  - ✓ go to a pre planned assembly area
  - ✓ stay at least 200 meters clear of the building

STAY CALM

Section 9 Proof of Training

Insert Record of Training....using separate cover if needed.

FOR EXAMPLE

WHMIS
CONFINED SPACE
ASBESTOS ABATEMENT
FALL ARREST
HEAVY EQUIPMENT

Section 10 MSDS

Insert under separate cover MSDS for Project (valid for 3 years)

Date: _____

Contractor Signature: _____

Contractor H&S Representative: _____

SNC·LAVALIN O&M

PERMIT TO WORK FORM

FRM-HS-OM-PTW-01a

A. FACILITY AND PROJECT WORK REQUIREMENTS

☐ N.A.	☐ Work requested on this permit meets the requirements stipulated in Start Up Meeting for this project.
☐ N.A.	☐ Contractor Environmental Health and Safety submittals have been approved for this project.
☐ N.A.	☐ Material Safety Data Sheets have been provided for materials used to complete the work.
☐ N.A.	☐ Contractor has reviewed Asbestos Management Plan and is aware of location of asbestos containing materials in the work area.

B. CONTRACTOR AND WORK INFORMATION

REQUESTED BY	COMPANY NAME	REQUEST DATE	PHONE #	PROJECT# / PO#

GENERAL CONTRACTOR	JOB FOREPERSON	PHONE #

SUBCONTRACTORS ☐ List Attached

WORK AREA	SECURITY/COMMISSIONAIRE REQUIRED ☐ Yes	WORKERS' NAMES ☐ List Attached

WORK PERFORMED - Shut down request must indicate date and time ☐ Description attached

WORK HOURS - FACILITY MANAGER APPROVAL REQUIRED FOR WORK (typical work hours) ☐ Schedule Attached

	MONDAY	TUESDAY	WEDNESDAY	THURSDAY	FRIDAY	SATURDAY	SUNDAY
START							
END							

START DATE (mm/dd/yyyy)	APPROVAL SIGNATURE(S)	PHONE #
	FACILITY MANAGER	

C. WORKER SAFETY AND SITE PROTECTION REQUIREMENTS

ELECTRICAL SAFETY, ISOLATION & LOCK OUT/TAG OUT

- ☐ ELECTRICAL SWITCHES IN OFF POSITION & TESTED FOR ZERO ENERGY
- ☐ PIPING DISCONNECTED AND BLANKED OFF
- ☐ VALVE/SWITCH LOCKED AND TAGGED ☐ ARC FLASH CONTROLS

PERSONAL PROTECTIVE EQUIPMENT

- ☐ FALL ARREST ☐ FOOT PROTECTION ☐ HEAD PROTECTION
- ☐ EYE PROTECTION ☐ RESPIRATORY PROTECTION ☐ FACESHIELD

SITE CONTROL & PROTECTION

- ☐ CONSTRUCTION SIGNAGE ☐ BARRIERS - HOARDING/FENCING
- ☐ NOTICE OF PROJECT ☐ CAUTION/DANGER TAPE
- ☐ DUST CONTROL & DIRT TRACKING PREVENTION

GENERAL SITE PROCEDURES

- ☐ INCIDENT NOTIFICATION/REPORTING ☐ SITE SECURITY

HOT WORK & FIRE SAFETY

- ☐ FIRE EXTINGUISHER ☐ HOT WORK PERMIT
- ☐ SPRINKLER VALVES ISOLATED ☐ FIRE WATCH
- ☐ FIRE ZONE DISABLED

ENVIRONMENTAL PROTECTION

- ☐ ASBESTOS ABATEMENT PROCEDURES
- ☐ OTHER DESIGNATED SUBSTANCE ABATEMENT
- ☐ MOULD ABATEMENT REGULATED PROCEDURES
- ☐ HAZARDOUS WASTE REGULATED REMOVAL PROCEDURES

CONFINED SPACE

- ☐ ATMOSPHERIC HAZARD CONTROLS ☐ ENTRY PERMIT
- ☐ RESCUE PROCEDURE ☐ CONFINED SPACE PROGRAM

WORK METHODS ID NUMBER:

D. CONTRACTOR AGREEMENT

I HAVE REVIEWED THE PERMIT AND UNDERSTAND THE NATURE AND EXTENT OF THE RULES, REGULATIONS AND PRECAUTIONS TO BE FOLLOWED IN PERFORMING THE WORK.

CONTRACTOR SIGNATURE: _____

PRINT NAME: _____

ISSUE DATE

EXPIRY DATE

SNC•LAVALIN O&M

Site Specific Hazard Assessment

Date Prepared _____

Prepared by (Supervisor if possible) _____ Phone _____ Pager _____

Supervisor Name _____ Phone _____ Pager _____

Employee Responsible for Safety Inspections Phone _____ Pager _____

List The Work Crews That Will Be Briefed About This Analysis _____

_____ Date of Briefing _____

Project Name _____

Project Number_____Job Location (Bldg.)_____

Please provide details of specific hazards relating to the scope of work. See below example.

	YES	NO	
EXAMPLE	☒	❑	**Ladders/Scaffolds/Stairways** – for example: Body Harness, Lanyards, Training, Safety Net, other
Hazard/Hazard Control			**Ladder Use - Our employees are only using 6 foot ladders. If a greater height needs to be reached, a man scissor lift will be used**

	YES	NO	
1.	❑	❑	**Fall Protection** – for example: Fall Protection Plan, Body Harness, Lanyards, Guardrails, Handrails, Training, other
			Hazard/Hazard Control _____
2.	❑	❑	**Ladders / Scaffolds / Stairways** – for example: Body Harness, Lanyards, Safety Net, Aerial Lifts, Guardrails, Training, other
			Hazard/Hazard Control _____
3.	❑	❑	**Excavation / Trenching / Shoring** – for example: Excavation Permit, Selection of Protective Systems, Shoring, Slope Detail, Spoils Pile, Soil Classification, Sloping and Benching, Hydraulic Shoring, Access Ladders, Traffic Plates, other
			Hazard/Hazard Control _____
4.	❑	❑	**Lockout and Tagout Control of Hazardous Energy** – for example: Locks and Tags, Blinds, Safety Meetings, Training, other
			Hazard/Hazard Control _____
5.	❑	❑	**Electrical Hot Work Permit Required** – for example: Energized Electrical Permit, Rubber Mat, Sleeves, PPE, other
			Hazard/Hazard Control _____

6. ❑ ❑ **Electrical / Power Transmission** – for example: Wiring Design, Wiring Protection, Hazardous Location Installation, other
Hazard/Hazard Control _____

_____

7. ❑ ❑ **Hoisting / Rigging** – for example: Operator Permits, Equipment Inspections and Tags, Training, other
Hazard/Hazard Control _____

_____

8. ❑ ❑ **Confined Space** – for example: ESH Entry Approval/Permit, Training, Air Monitoring, Rescue Plan and Equipment, other
Hazard/Hazard Control _____

_____

9. ❑ ❑ **Demolition** – for example: Preparatory Operations, Work Practices, Chutes, Mechanical Demolition, Barricades, other
Hazard/Hazard Control _____

_____

10. ❑ **Signs/Signals/Barricades** – for example: Caution Tape, Barriers, Barricades, Signs, Traffic Cones, Tags, Traffic Vests, other
Hazard/Hazard Control _____

_____

11. ❑ ❑ **Head Protection and Rollover Protective Structure** – for example: Hard Hats, Bump Caps, Equipment Inspection, other
Hazard/Hazard Control _____

_____

12. ❑ ❑ **Eye Protection** – for example: Safety Glasses, Safety Goggles, Face Shields, Portable Eye Wash Unit, other
Hazard/Hazard Control _____

_____

13. ❑ ❑ **Ear Protection** – for example: Ear Plugs, Ear Muffs, other
Hazard/Hazard Control _____

_____

14. ❑ ❑ **Breathing Protection** – for example: Engineering Controls, Respirators, Air filters, Dust Masks, HEPA Filters, other
Hazard/Hazard Control _____

_____

15. ❑ ❑ **Hand Protection** – for example: Gloves, Gauntlets, Sleeves, Barrier Cream, other
Hazard/Hazard Control _____

_____

16. ❑ ❑ **Torso Protection** – for example: Flame Resistant Clothing, Coveralls, Aprons, Bib Overalls, other
Hazard/Hazard Control _____

_____

17. ❑ ❑ **Foot Protection** – for example: Steel Toed Shoes, Metatarsal Guards, Boots, other
Hazard/Hazard Control _____

_____

18. ❑ ❑ **Site Exits / Means of Egress** – for example: Emergency Action Plans, Marked and Clear, Outdoors Job, other

Hazard/Hazard Control _____

_____

19. ❑ ❑ **Fire Protection/Prevention** – for example: Extinguishers, Fire Watch, 2-Way Radio, Pull Box, Alarms, other

Hazard/Hazard Control .

20. ❑ ❑ **Welding/Cutting/Brazing** – for example: Welding/Burn Permit, Fire Watch, Fire Blanket, Site Screen, Gas Bottle Safety, other

Hazard/Hazard Control _____

_____

21. ❑ ❑ **Hot Work Permit Required** – for example: Welding, Brazing, Torch Cutting, Temporary Heating, Pressured Air Line, other

Hazard/Hazard Control . _____

_____

22. ❑ ❑ **Material Handling, Storage, Use, and Disposal** – for example: Flammables, Combustibles, Labeling, Gas Bottle Storage, LP-Gas Safety, Safety Containers/Cans, Waste Materials, Disposal Process, other

Hazard/Hazard Control _____

_____

23. ❑ ❑ **Concrete / Masonry** – for example: Debris Pile, Chutes, Wet Cuts, other

Hazard/Hazard Control _____

_____

24. ❑ **Crane / Derrick / Hoist / Helicopter / Conveyors** – for example: Drum Hoists, Elevators, Cable Inspections, other

Hazard/Hazard Control _____

_____

25. ❑ ❑ **Tunnel / Shaft / Caissons / Compressed Air** – for example: Underground Construction, Cofferdams, Blasting Safety, other

Hazard/Hazard Control _____

_____

26. ❑ ❑ **Steel Erection** – for example: Falling Object Protection, Site-Specific Erection Plan, Construction Sequence, other

Hazard/Hazard Control _____

_____

27. ❑ ❑ **Vehicle Safety / Mechanized Equipment** – for example: Operator Permits, Equipment Inspection, Hydraulic Inspection, other

Hazard/Hazard Control _____

_____

28. ❑ ❑ **Construction Power** – for example: Extension Cords, GFCI, Generators, Battery Charging, Air Receivers, other

Hazard/Hazard Control _____

_____

29. ❑ ❑ **Blasting and Use of Explosives** – for example: Blaster Qualifications, Transportation, Storage, Loading, Inspection, other

Hazard/Hazard Control _____

_____

30. ❑ ❑ **Powder Actuated Tool Safety** – for example: (HILTI) Operator Training, Valid License, other

Hazard/Hazard Control _____

_____

31. ❑ ❑ **Power & Hand Tool Safety** – for example: Guards, Cords, Ground Prong, GFCI, Jacks, Abrasive Wheels, other
Hazard/Hazard Control _____

32. ❑ ❑ **Area Lighting** – for example: Flood Lights, Traffic Control Lights, Drop Lights, Flashlights, other
Hazard/Hazard Control _____
_____

33. ❑ ❑ **Housekeeping** – for example: Debris Pile, Hazardous Waste Disposal Containers, Clear Work Area, other
Hazard/Hazard Control _____
_____

34. ❑ ❑ **Traffic Control** – for example: Flagman, Signboard, Caution Lights, Traffic Vests, Whistle, other
Hazard/Hazard Control _____
_____

35. ❑ ❑ **Hazard Communication / Toxic Substances** – for example: Material Safety Data Sheets, Asbestos, Benzene, other
Hazard/Hazard Control _____
_____

36. ❑ ❑ **Ionizing & Non Ionizing Radiation** – for example: Radiation Badges, Training, Distance, Shielding, Time, other
Hazard/Hazard Control _____
_____

37. ❑ ❑ **Environmental** – for example: Excavation Permit, Segregated Debris Pile, Asbestos, Run-off Prevention, other
Hazard/Hazard Control _____
_____

38. ❑ ❑ **Medical Protection** – for example: First Aid Kit, C.P.R. Trained Personnel, 2-Way Radio, Telephone 9-911, other
Hazard/Hazard Control _____
_____

39. ❑ ❑ **General Health & Safety Provisions** – for example: Recordkeeping, Work Practices, Equipment Maintenance, Training, other
Hazard/Hazard Control _____
_____

40. ❑ ❑ **Sanitation** – for example: Drinking Water, Toilets, Eating Areas, Washing Areas, other
Hazard/Hazard Control _____
_____

41. ❑ ❑ **Other** – Identify any other hazard control associated with this job
Hazard/Hazard Control _____
_____
_____