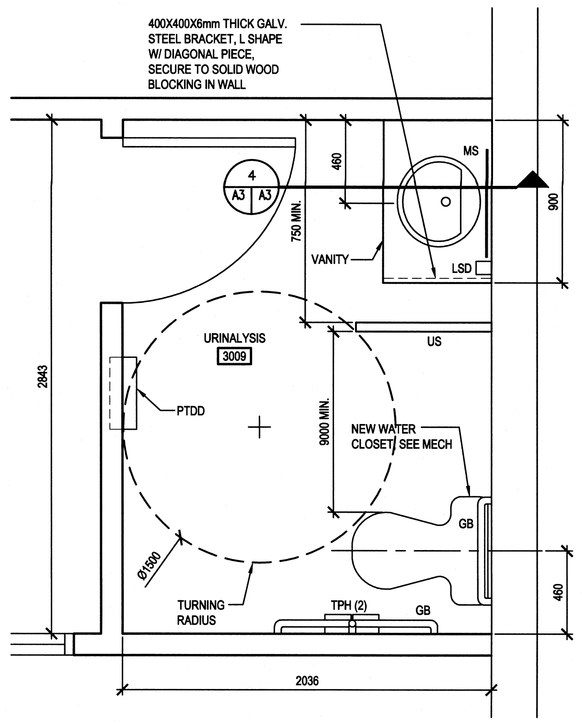

NOTES:
1. PROVIDE SOLID BLOCKING IN WALL AT NEW GRAB BARS, URINAL SCREEN, VANITY, AND VANITY SUPPORT BRACKET.
2. INSTALL ACCESSORIES AS PER CSA BARRIER FREE GUIDELINES.
3. REFER TO MECH AND ELEC DRAWINGS FOR PLUMBING FIXTURES AND CONNECTIONS.

FLOOR PLAN ENLARGEMENT - URINALYSIS, RM 3009

1 A2 A3

SCALE 1:20

SCALE : 1:20

0mm 500mm 1000mm 1500mm 2000mm 2500mm

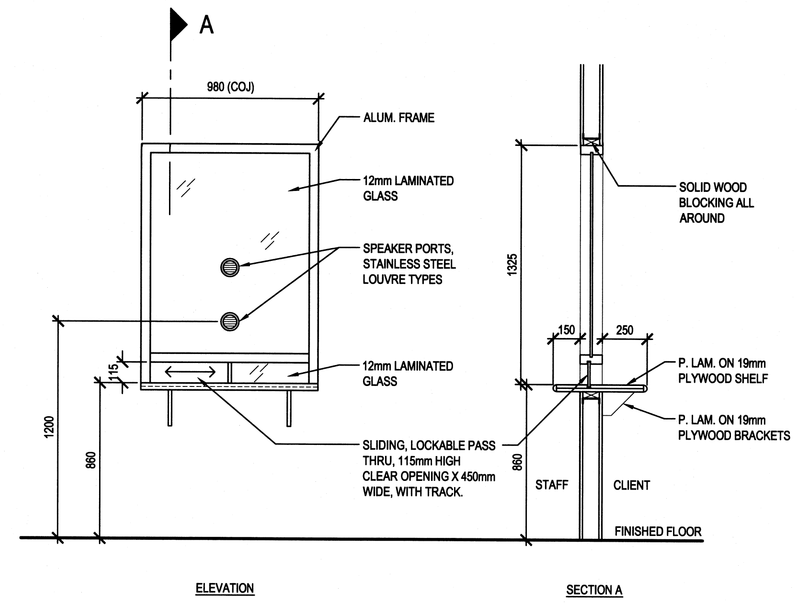

ELEVATION

SECTION A

ELEVATION, ADMIN AREA RECEPTION COUNTER

2 A2 A3

SCALE 1:20

SCALE : 1:20

0mm 500mm 1000mm 1500mm 2000mm 2500mm

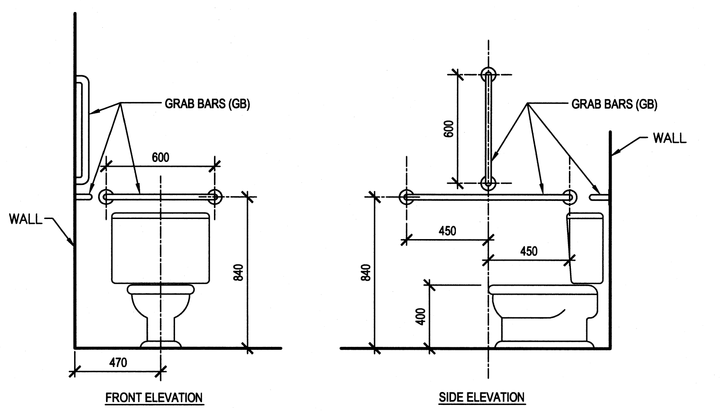

SCALE : 1:20

0mm 500mm 1000mm 1500mm 2000mm 2500mm

GRAB BAR MOUNTING HEIGHTS

3 A3 A3

SCALE 1:20

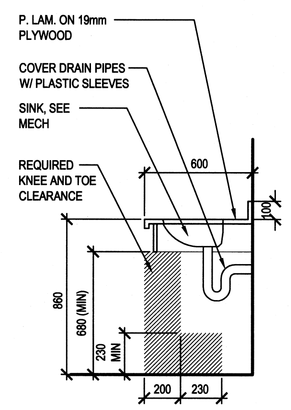

SCALE : 1:20

0mm 500mm 1000mm 1500mm 2000mm 2500mm

SECTION DETAIL - VANITY, UNRINALYSIS

4 A3 A3

SCALE 1:20

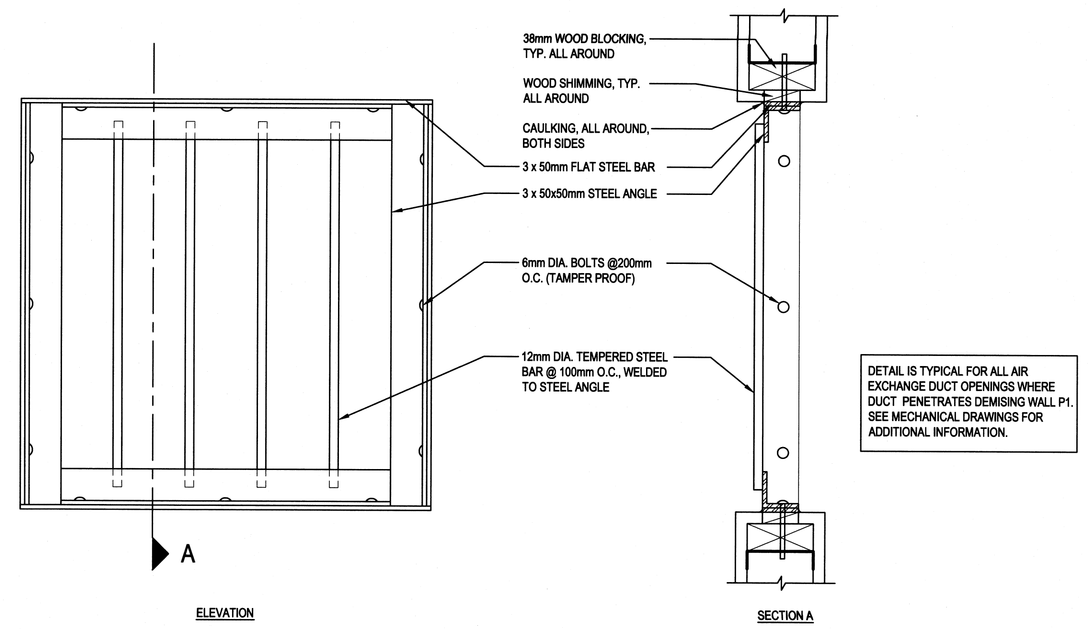

DETAIL IS TYPICAL FOR ALL AIR EXCHANGE DUCT OPENINGS WHERE DUCT PENETRATES DEMISING WALL P1. SEE MECHANICAL DRAWINGS FOR ADDITIONAL INFORMATION.

AIR EXCHANGE DUCTS

5 A3 A3

SCALE 1:5

SCALE: 1:5

0mm 100mm 200mm 300mm 400mm 500mm

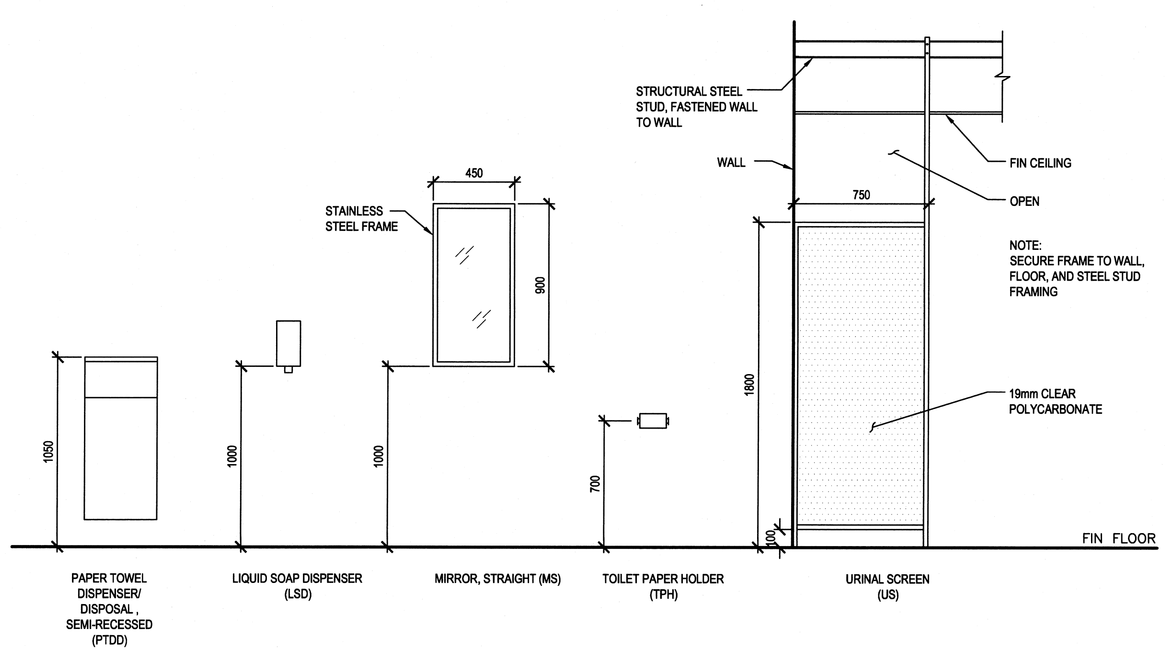

ACCESSORY MOUNTING HEIGHTS, URINALYSIS

6 A3 A3

SCALE 1:20

SCALE : 1:20

0mm 500mm 1000mm 1500mm 2000mm 2500mm

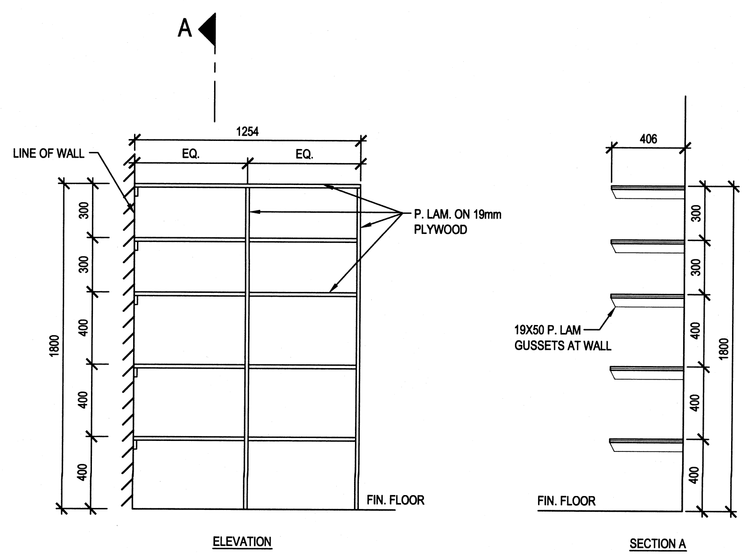

CLOSET SECTION

7 A2 A3

SCALE 1:20

SCALE : 1:20

0mm 500mm 1000mm 1500mm 2000mm 2500mm

Public Works and Government Services Canada / Travaux Publics et Services gouvernementaux Canada

NEWFOUNDLAND AND LABRADOR ASSOCIATION OF ARCHITECTS MEMBER
Peter Jackson, NLAA
Expires Dec 31, 2014
Date: DEC 10, 2014
LICENSED TO PRACTICE

revisions		date
0	ISSUED FOR TENDER	DEC 10 2014

project / projet

PAROLE OFFICE FIT-UP CSC
J.R. SMALLWOOD BLDG.
CORNER BROOK, NL

drawing / dessin

URINALYSIS PLAN AND DETAILS

designed / conçu

date

drawn / dessiné: JG

date: AUG 2014

approved / approuvé

date

Tender / Soumission
PWGSC Project Manager / Administrateur de projets TPSGC: Sandy Oke 2014-12-15

project number / no. du projet: R.063761.003

drawing no. / no. du dessin: A-3

PWGSC B1 (2004)

E-DRM/GDD-E1