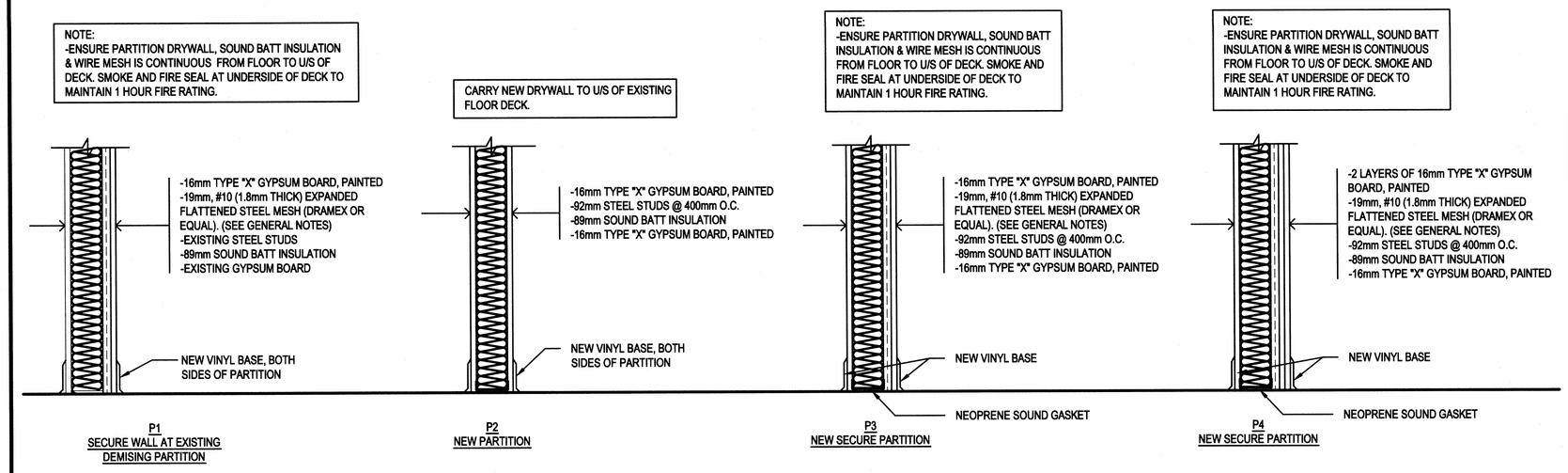

PARTITION TYPES

1 | A4 | A4

SCALE 1:10

SCALE : 1:10

0mm 100 200 300 400 500 600 700 800 900 1000mm

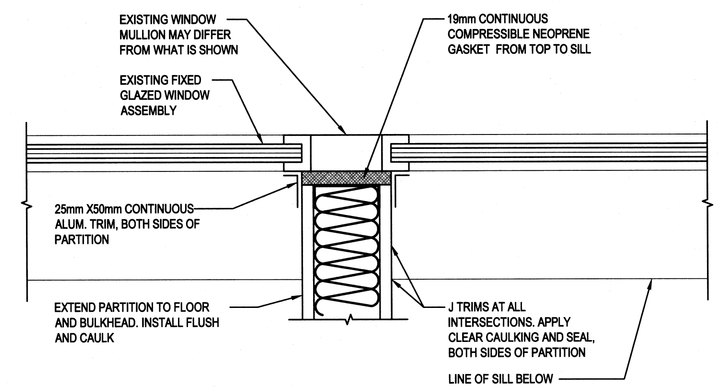

TYP. PARTIITION PLAN DETAIL AT WINDOW

2 | A2 | A4

SCALE 1:5

SCALE: 1:5

0mm 100mm 200mm 300mm 400mm 500mm

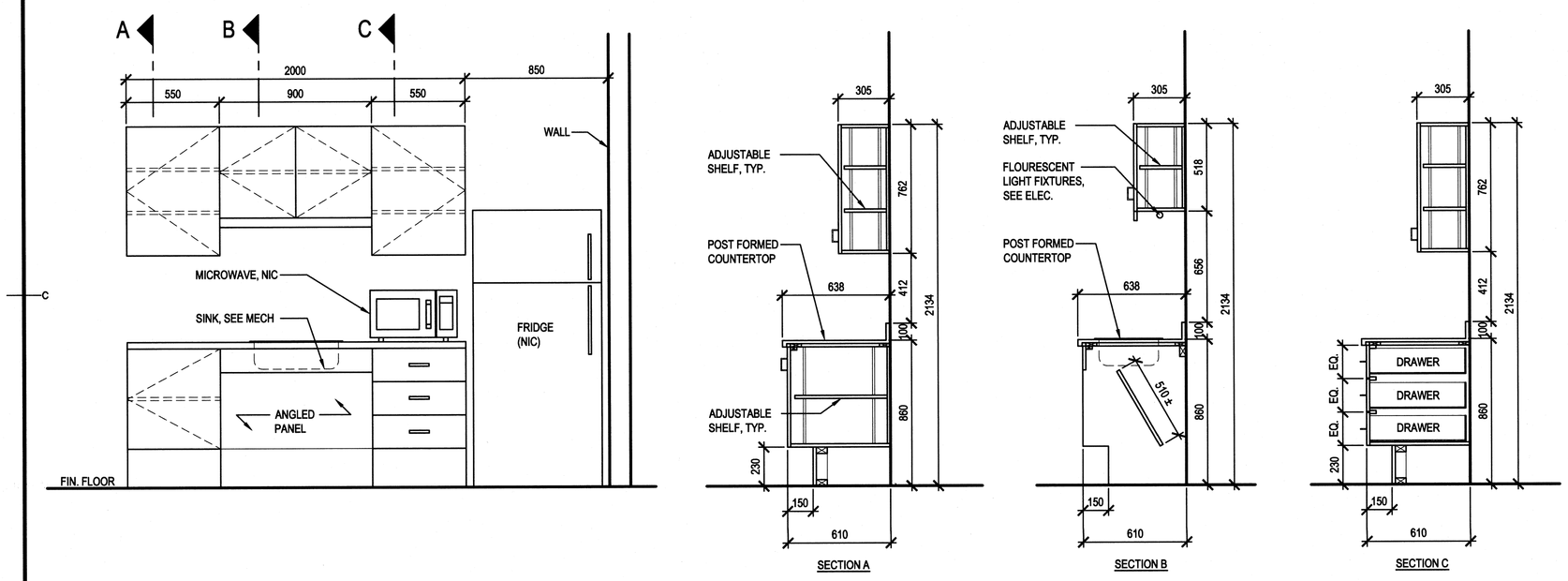

MILLWORK, STAFF UTILITY ROOM 3008, ELEVATIONS AND SECTIONS

3 | A2 | A4

SCALE 1:20

SCALE : 1:20

0mm 500mm 1000mm 1500mm 2000mm 2500mm

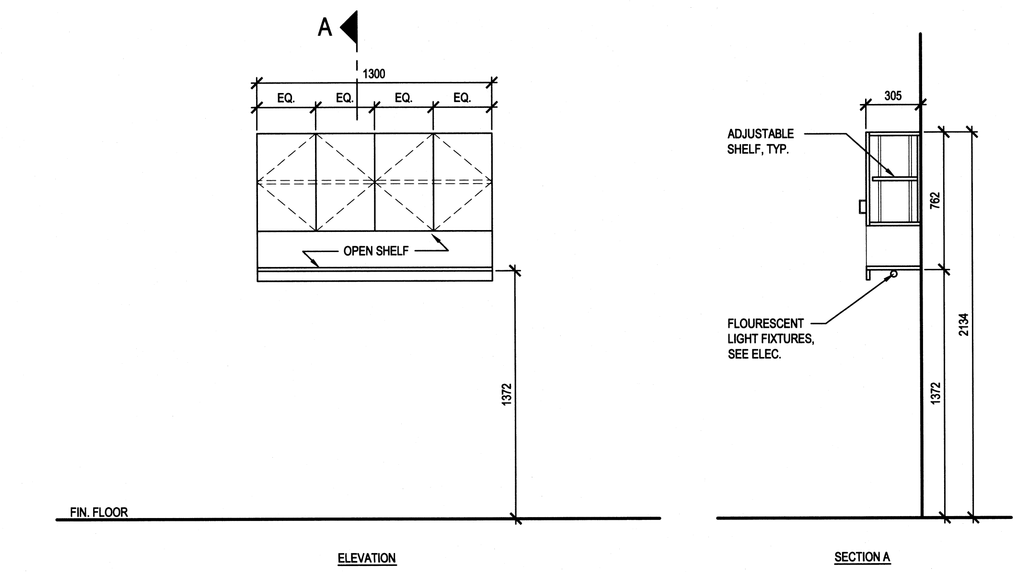

MILLWORK, FILE ROOM 3007, ELEVATIONS AND SECTIONS

4 | A2 | A4

SCALE 1:20

SCALE : 1:20

0mm 500mm 1000mm 1500mm 2000mm 2500mm

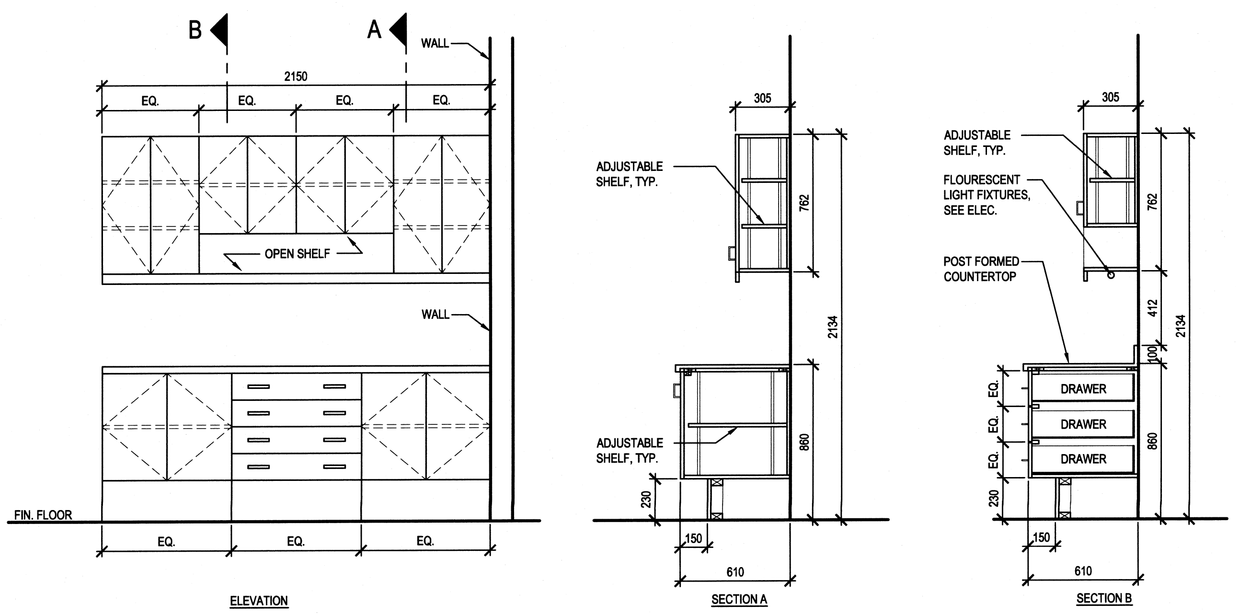

MILLWORK, FILE ROOM 3007, ELEVATIONS AND SECTIONS

5 | A2 | A4

SCALE 1:20

SCALE : 1:20

0mm 500mm 1000mm 1500mm 2000mm 2500mm

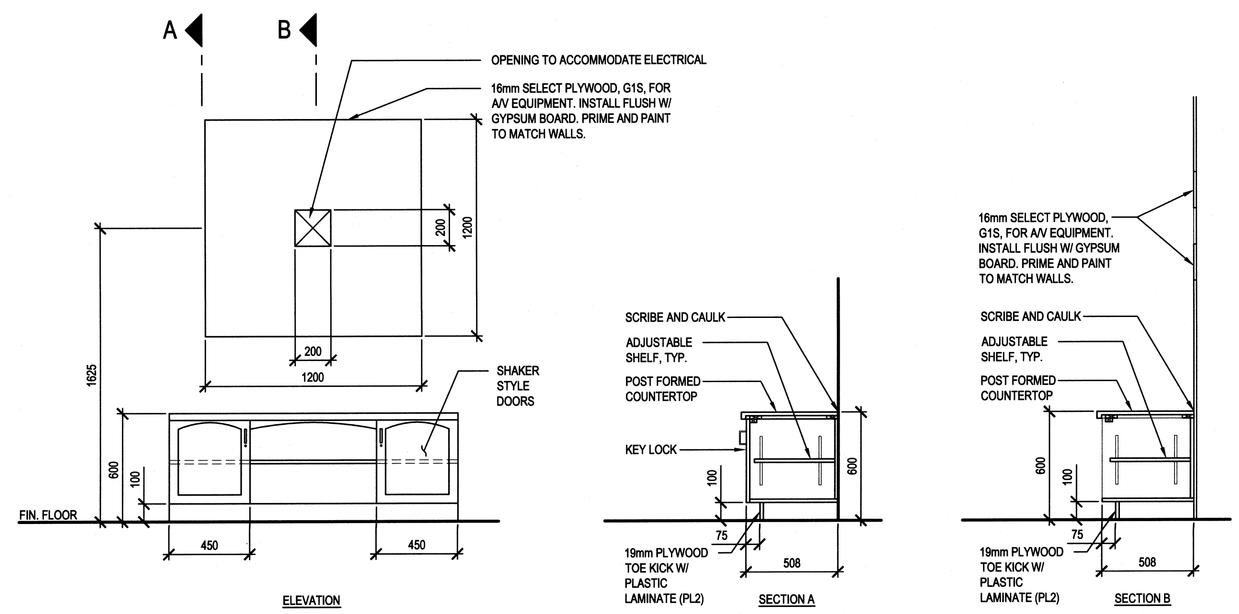

MILLWORK, AUDIO/VIDEO CABINET

6 | A2 | A4

SCALE 1:20

SCALE : 1:20

0mm 500mm 1000mm 1500mm 2000mm 2500mm

Public Works and Government Services Canada | Travaux Publics et Services gouvernementaux Canada

NEWFOUNDLAND AND LABRADOR ASSOCIATION OF ARCHITECTS
MEMBER
Peter Jackson, NLAA
Expires Dec 31, 2014
Date: DEC 10, 2014
LICENSED TO PRACTICE

revisions		date
0	ISSUED FOR TENDER	DEC 10 2014

project / projet

PAROLE OFFICE FIT-UP CSC
J.R. SMALLWOOD BLDG.
CORNER BROOK, NL

drawing / dessin

PARTITION TYPES,
MILLWORK DETAILS

designed / conçu

date

drawn / dessiné: JG

date: AUG 2014

approved / approuvé

date

Tender / Soumission

PWGSC Project Manager / Administrateur de projets TPSGC: Sandy Ole 2014-12-15

project number / no. du projet: R.063761.003

drawing no. / no. du dessin: A-4

PWGSC B1 (2004)

E-DRM/GDD-E: