EXISTING

PANEL 3HA LOCATION: ELECTRICAL ROOM SERVICE: 347/600v, 3ø, 4W — MOUNTING: SURFACE BRANCH CIRCUIT I.C. — 225 AMP. MAINS. 10,000 AMPS RMS SYM.

LOAD DESCRIPTION	LOAD	WIRE	BKR	CIRCUIT		BKR	WIRE	LOAD	LOAD DESCRIPTION	PHASE LOAD A	B	C
HEAT W'RM 310 AND 308			20	1	2	20	12	5000	STAFF UTILITY 3008 / FILE RM. 3007	–		
HEAT ELEVATOR LOBBY 304			20	3	4	20	12	5000	FILE RM. 3007 / MEETING RM. 3000		–	
HEAT ELEVATOR LOBBY 304			20	5	6	20	12	5000	MEETING RM. 3000 / PAROLE OFF. 3001 & 3002			–
HEAT OFFICE SPACE 314			20	7	8	20	12	5000	PAROLE OFF. 3002, 3003, 3004	–		
HEAT OFFICE SPACE 314			20	9	10	20			VESTIBULE AND ROOM 330		–	
HEAT OFFICE SPACE 314			20	11	12	20			RM 320 AND OPEN OFFICE 317			–
HEAT OFFICE SPACE 314			20	13	14	20			HEAT OFFICE SPACE 313	–		
HEAT OFFICE SPACE 314			20	15	16	20			HEAT OFFICE SPACE 320		–	
OPEN OFFICE AND RM 337			20	17	18	20			OPEN OFFICE AND WAITING			–
HEAT OFFICE SPACE 314			20	19	20	20			SPARE	–		
HEAT OFFICE SPACE 314			20	21	22	20			SPARE		–	
HEAT OFFICE SPACE 314			20	23	24	20			SPARE			–
HEAT OFFICE SPACE 314			20	25	26	20			SPARE	–		
HEAT VESTIBULE 301			20	27	28	20			SPARE		–	
HEAT SECURITY 303 STAIR			20	29	30							–
SPARE			20	31	32					–		
				33	34						–	
				35	36							–
				37	38					–		
				39	40						–	
				41	42							–
				43	44					–		
				45	46						–	
				47	48							–
				49	50					–		
				51	52						–	
				53	54							–
				55	56					–		
				57	58						–	
				59	60							–
				61	62					–		
				63	64						–	
				65	66							–
				67	68					–		
				69	70						–	
				71	72							–
				73	74					–		
				75	76						–	
				77	78							–
				79	80					–		
				81	82						–	
				83	84							–

COMMENTS: + – INDICATES C/W LOCK-ON DEVICE. – SPRINKLER PROOF.
CONNECTED LOAD – KW. TOTAL WATTS – – –
ESTIMATED DEMAND – KW. TOTAL AMPS – – –

EXISTING

PANEL 3LA LOCATION: ELECTRICAL ROOM SERVICE: 347/600v, 3ø, 4W — MOUNTING: SURFACE BRANCH CIRCUIT I.C. — 225 AMP. MAINS. 10,000 AMPS RMS SYM.

LOAD DESCRIPTION	LOAD	WIRE	BKR	CIRCUIT		BKR	WIRE	LOAD	LOAD DESCRIPTION	PHASE LOAD A	B	C
LTG. 301,302,304,305,306,308,310,311			15	1	2	15			LTG. 325,329,316,318,317	–		
LTG. 330,311,332,333			15	3	4	15			LTG. 329,327,324,322		–	
LTG. 330,336,338			15	5	6	15			LTG. 317,319,320,323			–
LTG. 330,335,336			15	7	8	15			LTG. 326,325	–		
LTG. 334 AND 333			15	9	10	15			RELAY PANEL 3RP		–	
SPARE			20	11	12	**15**	**12**	**1021**	LTG. 3000,3001,3006,3007,3008,3009, 3015,3016,3017.			–
				13	14	15			SPARE	–		
				15	16	**15**	**12**	**874**	LTG. 3002,3013,3004,3005,3010,3012, 3013,3014,3015.		–	
				17	18	15			OPEN OFFICE AND WAITING			–
				19	20	15			SPARE	–		
				21	22	15			SPARE		–	
				23	24	15			SPARE			–

COMMENTS: + – INDICATES C/W LOCK-ON DEVICE. – SPRINKLER PROOF.
CONNECTED LOAD – KW. TOTAL WATTS – – –
ESTIMATED DEMAND – KW. TOTAL AMPS – – –

EXISTING

PANEL 3RB LOCATION: ELECTRICAL ROOM SERVICE: 120/208v, 3ø, 4W — MOUNTING: SURFACE BRANCH CIRCUIT I.C. — 225 AMP. MAINS. 10,000 AMPS RMS SYM.

LOAD DESCRIPTION	LOAD	WIRE	BKR	CIRCUIT		BKR	WIRE	LOAD	LOAD DESCRIPTION	PHASE LOAD A	B	C
RECEPT. FUR.PARTITION OPEN OFFICE 326 / RECEPT. DATA ROOM			15	1	2	**15**	**12**	**400**	**GFI COUNTER 3008**	–		
			AMP	3	4	**15**	**12**	**800**	**DOOR HARDWARE POWER**		–	
			3P	5	6	**15**	**12**	**100**	**DOORBELL**			–
RECEPT. RM 3000/3001	**1000**	**12**	**15**	7	8	15			RECEPT SECURE STORAGE 322	–		
RECEPT. RM 3007/3008/3017	**1000**	**12**	**15**	9	10	20			COUNTER GFI ACORA		–	
RECEPT. RM 3017/3016/3009/3010	**800**	**12**	**15**	11	12	15A			HAND DRYER WASHROOM 310			–
RECEPT. RM 3005/3011	**800**	**12**	**15**	13	14	2P				–		
RECEPT. RM 3012	**800**	**12**	**15**	15	16	15			RECEPT. SECURITY 303		–	
RECEPT. RM 3002/3001	**1000**	**12**	**15**	17	18	**15**	**12**	**1000**	**STAFF 3008 REFRIGERATOR**			–
FUR.PARTITION OPEN OFFICE 317			15	19	20	15			VAV BOXES RM. 303/302/312/313	–		
			AMP	21	22	15			VAV BOXES OFFICE SPACE 313		–	
			3P	23	24	15			VAV BOXES OFFICE SPACE 314			–
RECEPT. 319 AND 318 ACOA			15	25	26	15			VAV BOXES OFFICE SPACE 314			
			AMP	27	28	15			RECEPT. MALE WASHROOM 310			
			3P	29	30	15			RECEPT. FEMALE WASHROOM 308			
FUR.PARTITION OPEN OFFICE 317			15	31	32	15			DVA – KITCHEN GF			
			AMP	33	34	15			DVA – KITCHEN GF			
			3P	35	36	15			DVA – KITCHEN GF			
RECEPT. RM 3003/3015	**800**	**12**	**15**	37	38	15			RECEPT. 315, 323, 328 RECEPT. 326 DVA – COPIER			
RECEPT. RM 3004/3013	**800**	**12**	**15**	39	40	AMP						
RECEPT. RM 3006	**800**	**12**	**15**	41	42	3P						

COMMENTS: + – INDICATES C/W LOCK-ON DEVICE. – SPRINKLER PROOF.
CONNECTED LOAD – KW. TOTAL WATTS – – –
ESTIMATED DEMAND – KW. TOTAL AMPS – – –

EXISTING

PANEL 3RA LOCATION: ELECTRICAL ROOM SERVICE: 120/208v, 3ø, 4W — MOUNTING: SURFACE BRANCH CIRCUIT I.C. — 225 AMP. MAINS. 10,000 AMPS RMS SYM.

LOAD DESCRIPTION	LOAD	WIRE	BKR	CIRCUIT		BKR	WIRE	LOAD	LOAD DESCRIPTION	PHASE LOAD A	B	C
FUR.SCR.OPEN OFF. 330 REC. OFF. 330			15	1	2	15			REC. ELECT. RM. 312	–		
			AMP	3	4	15			REC. LOBBY 302 CORR. 305		–	
			3P	5	6	15			TRAINING ROOM			–
MICROWAVE – 3008	**1000**	**12**	**15**	7	8	15			TRAINING ROOM	–		
GFI COUNTER 3008	**400**	**12**	**15**	9	10	15			REC. STAIR		–	
REC. OFF. 330			**15**	11	12	15			DRINKING FOUNTAIN 305			–
FURN. SCR. OPEN OFF. 338			15	13	14	15			CLOCK OUTLET 304	–		
			AMP	15	16	15A			HAND DRYER WASHROOM 331		–	
			3P	17	18	2P						–
REC. OFF. 337			15	19	20	**20**	**12**	**400**	**FAX MACHINE – 3015**	–		
REC. WORK STN. 336			AMP	21	22	15A			HAND DRYER WASHROOM 308		–	
REC. 336 AND 338			3P	23	24	2P						–
FUR. SCR. OPEN. OFF. 333			15	25	26	15			SPARE			
			AMP	27	28	15			HAND DRYER WASHROOM 328			
			3P	29	30	15						
FUR. SCR. OPEN. OFF. 333			15	31	32	15			REC. OPEN OFF. 330			
			AMP	33	34	15			REC. OPEN OFF. 330			
			3P	35	36	**20**	**12**	**400**	**COPIER – 3017**			
FUR. SCR. OPEN. OFF. 333			15	37	38	15			REC. OPEN OFF. 330			
			AMP	39	40	AMP			REC. MEETING RM. 334			
			3P	41	42	3P			REC. OPEN OFF. 333			

COMMENTS: + – INDICATES C/W LOCK-ON DEVICE. – SPRINKLER PROOF.
CONNECTED LOAD – KW. TOTAL WATTS – – –
ESTIMATED DEMAND – KW. TOTAL AMPS – – –

TYPICAL: SHADING REPRESENTS EXISTING CIRCUITS TO REMAIN UNMODIFIED.

LIGHTING FIXTURE SCHEDULE

	TAG	TYPE A	TYPE B	TYPE C	TYPE Z
GENERAL DATA	FIXTURE	FLUORESCENT	LED	FLUORESCENT	EXISTING
	MANUFACTURER	METALUX	HALO	METALUX	
	CATALOG NO.	2RDI-IC-232FLS-347V-EB81-U	H457RICAT1E -EL406935-TL410SC	BE-117-347 -EB81-U	FIXTURE
	SHIELDING	FROSTED ACRYLIC	----	ACRYLIC	
LAMP DATA	NO. OF LAMPS PER FIXTURE	2	1	1	TO BE
	LAMP WATTAGE	32	11	17	
	LAMP DESIGNATION	F054/835	LED	F017/835	REMOVED
MOUNTING DATA	LOCATION	CEILING	CEILING	WALL	
	METHOD	RECESSED	RECESSED	SURFACE	
	MOUNTING HEIGHT	----	----	OVER MIRROR	
	CEILING OR WALL FINISH	----	GYPSUM	SEE ARCH.	
ELECTRICAL CHARACTERISTIC	FIXTURE VOLTAGE	347	347	347	
	BALLAST TYPE	SEE NOTE 4	----	SEE NOTE 4	
	TOTAL FIXTURE WATTAGE	61	15	20	
REMARKS			DIMMABLE		

ELECTRIC HEATING FIXTURE SCHEDULE

SYMBOL	A		
MANUFACTURER	D		
TYPE	AS8		
WATTS	1000		
VOLTS	347		
PHASE	1		
ACCESSORIES	---		
MOUNTING	WS		
REMARKS			

ACCESSORIES

LVR – BUILT-IN LOW VOLTAGE RELAY LESS TRANSFORMER.
LVRT – BUILT-IN LOW VOLTAGE RELAY C/W TRANSFORMER.
BIT – BUILT-IN THERMOSTAT
BITT – BUILT-IN TAMPERPROOF THERMOSTAT

MOUNTING

WS – WALL SURFACE.
WF – WALL FLUSH.
CS – CEILING SURFACE.
CF – CEILING FLUSH.
IS – IN SLAB.

MANUFACTURERS

D – DIMPLEX
O – OUELLET
S – STELPRO

NOTES:

1. MASTER ADDRESSABLE LOOP CONSISTS OF 2 #18 AWG TWISTED PAIR SHIELDED ULC CERTIFIED FOR FIRE DETECTION SYSTEM CABLES.
2. #18 AWG TWISTED SHIELDED PAIR CABLES TO DOOR HARDWARE.
3. STANDARD OF ACCEPTANCE: MAXSYS PC4020.

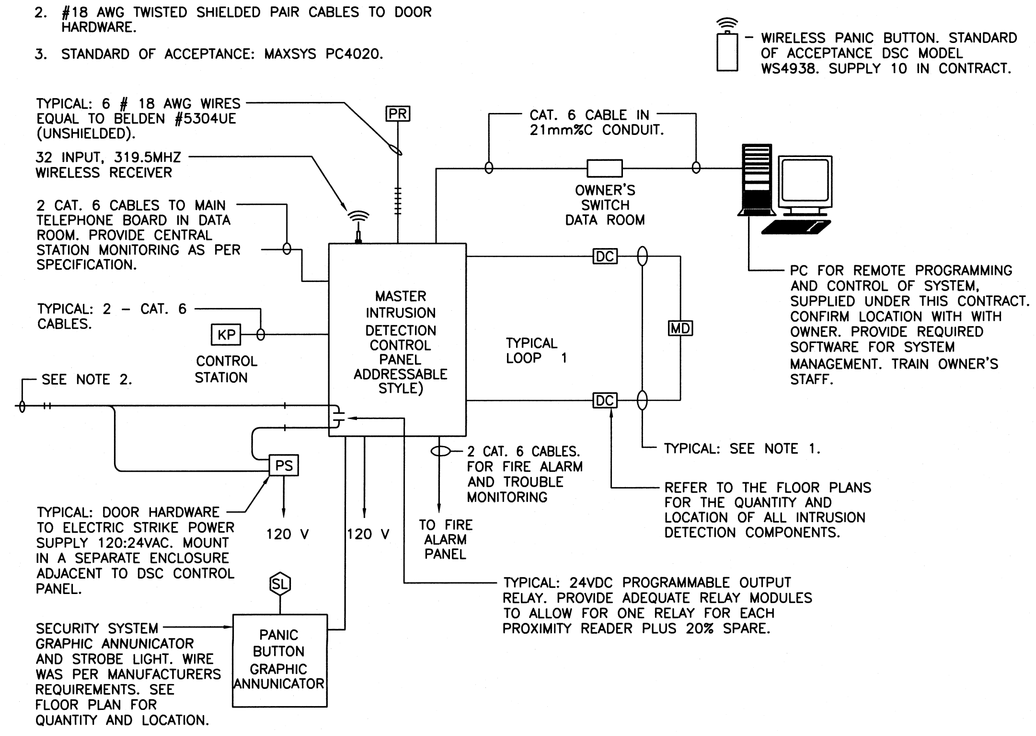

1 / E7 SECURITY SYSTEM WIRING SCHEMATIC
N.T.S.

Public Works and Government Services Canada — Travaux Publics et Services gouvernementaux Canada

REGISTERED PROFESSIONAL ENGINEER — PEGL Newfoundland Labrador — GREGORY S. TUCKER — SIGNATURE — 2014.12.10 DATE — NEWFOUNDLAND & LABRADOR

PROVINCE OF NEWFOUNDLAND AND LABRADOR
PEGL Newfoundland Labrador
PERMIT HOLDER
This Permit Allows
STANTEC CONSULTING LTD.
To practice Professional Engineering in Newfoundland and Labrador. Permit No. as issued by PEG .0291 which is valid for the year 2014.

revisions		date
0	ISSUED FOR TENDER	DEC 10 2014

project / projet: PAROLE OFFICE FIT-UP CSC

drawing / dessin: PANEL SCHEDULES, LIGHTING SCHEDULE AND HEATING FIXTURE SCHEDULE

designed / conçu
date
drawn / dessiné
date
approved / approuvé
date
Tender PWGSC / Soumission — PWGSC Project Manager / Administrateur de projets TPSGC — Sandy Oke 2014-12-15

project number / no. du projet: R.063761.003

drawing no. / no. du dessin: E7