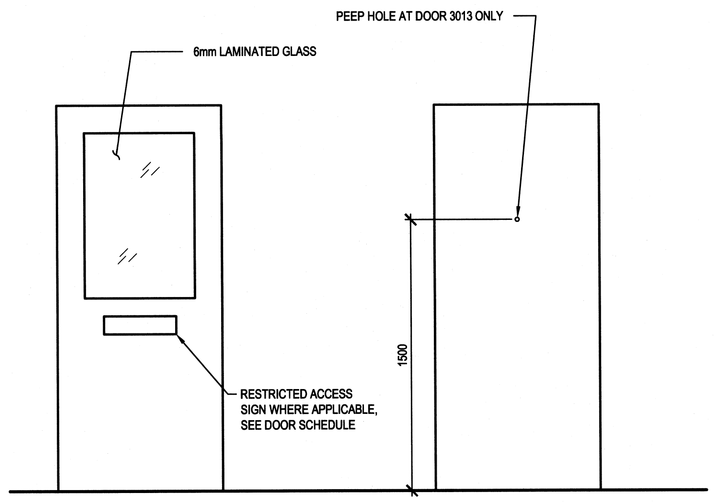

DOOR TYPE A

DOOR TYPE B
TYPE B1
(45min FIRE RATING)

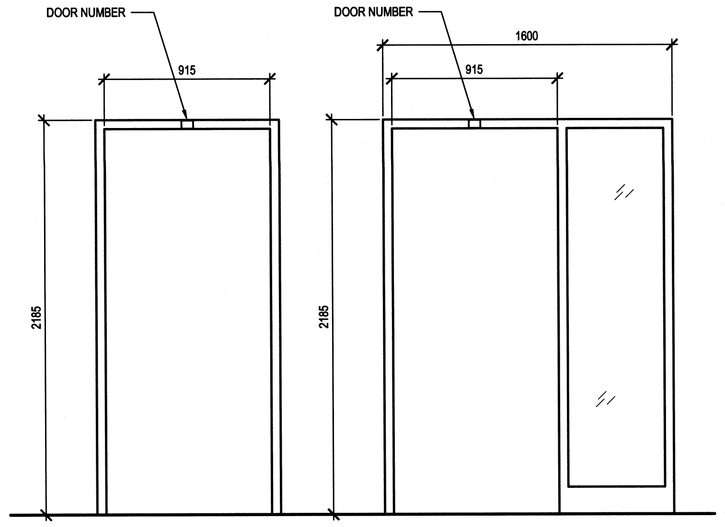

FRAME TYPE 1
PRESSED METAL FRAME, PAINTED

FRAME TYPE 1.1
PRESSED METAL FRAME, PAINTED
60 MIN FIRE RATING

FRAME TYPE 2
PRESSED METAL FRAME, PAINTED
6mm LAMINATED GLASS

DOOR AND FRAME ELEVATIONS

SCALE 1:20

1 A5 A5

SCALE : 1:20

0mm 500mm 1000mm 1500mm 2000mm 2500mm

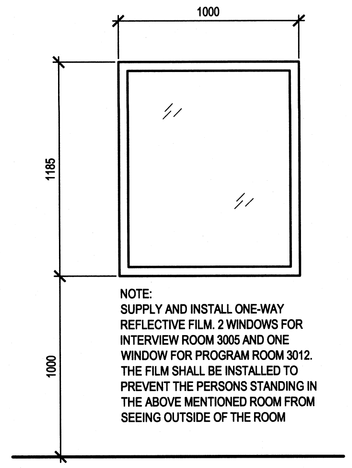

SCREEN TYPE SC1
PRESSED METAL FRAME, PAINTED
6mm LAMINATED GLASS

SCALE : 1:20

0mm 500mm 1000mm 1500mm 2000mm 2500mm

SCREEN TYPE, ELEVATION

SCALE 1:20

2 A5 A5

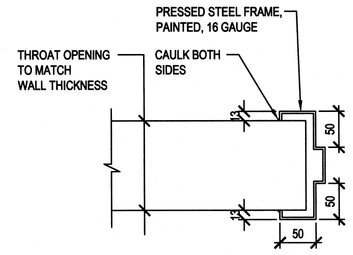

SCALE: 1:5

0mm 100mm 200mm 300mm 400mm 500mm

TYP. DOOR FRAME DETAIL

SCALE 1:5

3 A5 A5

DOOR AND FRAME SCHEDULE

DOOR NO.	LOCATION		DOOR					FRAME		FRR	HW GROUP	COMMENTS
	Room No.	Room Name	Width	Height	Material	Finish	Elev.	Frame Elev.	Finish			
3000	3000	MEETING ROOM 3000	914	2135	SCW	BIR, CL	A	2	P		1	
3001	3001	SENIOR P.O. 3001	914	2135	SCW	BIR, CL	A	2	P		1	
3002	3002	PAROLE OFFICER 3002	914	2135	SCW	BIR, CL	A	2	P		1	
3003	3003	PAROLE OFFICER 3003	914	2135	SCW	BIR, CL	A	2	P		1	
3004	3004	PAROLE OFFICE 3004	914	2135	SCW	BIR, CL	A	2	P		1	
3005	3005	INTERVIEW ROOM 3005	914	2135	SCW	BIR, CL	A	1	P		2	RESTRICTED ACCESS SIGNAGE
3006	3006	TELECOM ROOM 3006	914	2135	SCW	BIR, CL	B1	1.1	P	45 Door/ 60 Frame	3	
3007	3007	FILE ROOM 3007	914	2135	SCW	BIR, CL	B1	1.1	P	45 Door/ 60 Frame	4	
3008	3008	STAFF UTILITY 3008										
3009	3009	URINALYSIS 3009	914	2135	SCW	BIR, CL	B	1	P		6	
3010	3010	CONTROLLED WAITING 3010	914	2135	SCW	BIR, CL	EX	EX	P		7	
3011	3011	ADMIN AREA 3011	914	2135	SCW	BIR, CL	A	2	P		5	RESTRICTED ACCESS SIGNAGE
3012	3012	PROGRAM 3012	914	2135	SCW	BIR, CL	A	1	P		8	RESTRICTED ACCESS SIGNAGE
3013	3013	CORRIDOR 3013	914	2135	SCW	BIR, CL	B1	1.1	P	45 Door/ 60 Frame	9	
3014	3014	CORRIDOR 3014	914	2135	SCW	BIR, CL	A	2	P		5	180 DEGREE PEEP HOLE, INSTALL HEIGHT AS SHOWN
3015	3015	CORRIDOR 3015										
3016	3016	CORRIDOR 3016	914	2135	SCW	BIR, CL	A	2	P		10	BARRIER-FREE SIGN (INTERNATIONAL SYMBOL)
3017	3017	CORRIDOR 3017	914	2135	SCW	BIR, CL	A	2	P		5	
3018	3018	STORAGE CLOSET 3018	2X914	2135	SCW	BIR, CL			P			

LEGEND

BIR, CL- BIRCH, CLEAR FINISH
EX - EXISTING
P - PAINT
SCW - SOLID CORE WOOD

NOTE:
FOR HARDWARE GROUPS, SEE SHEET A2

ROOM FINISH SCHEDULE

Room Name	FLOOR		WALLS				CEILING
	Finish	Base	North	South	East	West	
MEETING ROOM 3000	CAR	VB	EP	EP	GBP	GBP	SAT
SENIOR P.O. 3001	CAR	VB	GBP	GBP	GBP	GBP	SAT
PAROLE OFFICER 3002	CAR	VB	GBP	GBP	GBP	GBP	SAT
PAROLE OFFICER 3003	CAR	VB	GBP	GBP	GBP	GBP	SAT
PAROLE OFFICER 3004	CAR	VB	GBP	GBP	GBP	GBP	SAT
INTERVIEW ROOM 3005	MAR	VB	GBP	GBP	GBP	GBP	SAT
TELECOM ROOM 3006	MAR	VB	GBP	GBP	GBP	GBP	SAT
FILE ROOM 3007	MAR	VB	EP	GBP	GBP	GBP	SAT
STAFF UTILITY 3008	MAR	VB	EP	GBP	GBP	GBP	SAT
URINALYSIS 3009	MAR	VB	GBP	GBP	GBP	GBP	SAT
CONTROLLED WAITING 3010	MAR	VB	GBP	GBP	EP/GBP	GBP	SAT
ADMIN AREA 3011	MAR	VB		GBP	GBP	GBP	SAT
PROGRAM 3012	MAR	VB	GBP	GBP	GBP	GBP	SAT
CORRIDOR 3013	CAR	VB	GBP	GBP	GBP	GBP	SAT
CORRIDOR 3014	CAR	VB	GBP	GBP	GBP	GBP	SAT
CORRIDOR 3015	CAR	VB	GBP	GBP	GBP	GBP	SAT
CORRIDOR 3016	MAR	VB	GBP	GBP	GBP	GBP	SAT
CORRIDOR 3017	MAR	VB	GBP	GBP	GBP	GBP	SAT
STORAGE CLOSET 3018	MAR	VB	GBP	GBP	GBP	GBP	SAT

LEGEND

SAT - SUSPENDED ACOUSTIC TILE TILE
CAR - CARPET
ESP - EXISTING STRUCTURE, PAINTED
GBP - GYPSUM BOARD, PAINTED
MAR - MARMOLEUM
EP - EXISTING TO BE PAINTED
VB - VINYL BASE, 100mm

NOTE:
EXISTING ACOUSTIC CEILING TILE AND GRID SYSTEM TO BE RE-USED. MODIFY AS REQUIRED TO SUIT NEW LAYOUT. PROVIDE NEW TILE AND GRID TO MATCH EXISTING AS REQUIRED.

SCHEDULES

4 A5 A5

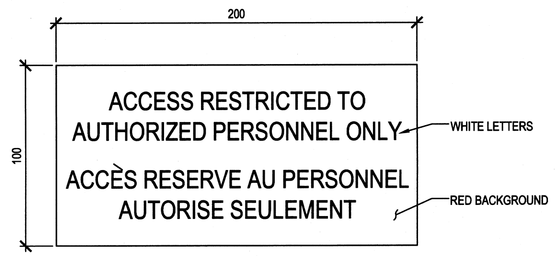

RESTRICTED ACCESS SIGN

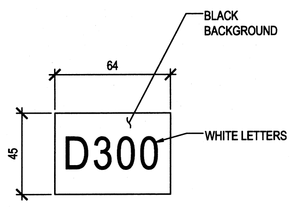

DOOR NUMBER SIGN

NOTE:
DOOR NUMBER SIGNAGE ON ALL DOORS. COORDINATE DOOR NUMBERING WITH OWNER.

SIGNAGE

SCALE 1:2

5 A5 A5

SCALE : 1:2

0mm 50mm 100mm 150mm 200mm 250mm

Public Works and Government Services Canada / Travaux Publics et Services gouvernementaux Canada

NEWFOUNDLAND AND LABRADOR MEMBER Peter Jackson, NLAA Expires Dec 31, 2014 Date: DEC 10, 2014 LICENSED TO PRACTISE ASSOCIATION OF ARCHITECTS

revisions		date
0	ISSUED FOR TENDER	DEC 10 2014

project / projet

PAROLE OFFICE FIT-UP CSC
J.R. SMALLWOOD BLDG.
CORNER BROOK, NL

drawing / dessin

SCHEDULES, DOORS AND FRAMES, DOOR HARDWARE

designed / conçu
date
drawn / dessiné
date APRIL 2014
approved / approuvé
date
Tender / Soumission
PWGSC Project Manager / Administrateur de projets TPSGC Sandy Oke 2014-12-15

project number / no. du projet
R.063761.003

drawing no. / no. du dessin
A-5

E-DRM/GDD-E: