Public Works and Government Services Canada

Travaux publics et Services gouvernementaux Canada

RETURN BIDS TO:
RETOURNER LES SOUMISSIONS À:

Bid Receiving Public Works and Government Services Canada/Réception des soumissions Travaux publics et Services gouvernementaux Canada
1713 Bedford Row
Halifax, N.S./Halifax, (N.É.)
B3J 1T3
Bid Fax: (902) 496-5016

SOLICITATION AMENDMENT
MODIFICATION DE L'INVITATION

The referenced document is hereby revised; unless otherwise indicated, all other terms and conditions of the Solicitation remain the same.

Ce document est par la présente révisé; sauf indication contraire, les modalités de l'invitation demeurent les mêmes.

Comments - Commentaires
THIS DOCUMENT CONTAINS A SECURITY REQUIREMENT

Vendor/Firm Name and Address
Raison sociale et adresse du fournisseur/de l'entrepreneur

Issuing Office - Bureau de distribution
Atlantic Region Acquisitions/Région de l'Atlantique Acquisitions
1713 Bedford Row
Halifax, N.S./Halifax, (N.É.)
B3J 3C9
Nova Scot

Title - Sujet Hydraulic Test Facility Upgrade	
Solicitation No. - N° de l'invitation W3554-156124/A	**Amendment No. - N° modif.** 001
Client Reference No. - N° de référence du client W3554-15-6124	**Date** 2015-01-22
GETS Reference No. - N° de référence de SEAG PW-$HAL-219-9424	
File No. - N° de dossier HAL-4-73149 (219)	**CCC No./N° CCC - FMS No./N° VME**
Solicitation Closes - L'invitation prend fin **at - à 02:00 PM** **on - le 2015-02-17**	**Time Zone** **Fuseau horaire** Atlantic Standard Time AST
F.O.B. - F.A.B. **Plant-Usine:** ☐ **Destination:** ☑ **Other-Autre:** ☐	
Address Enquiries to: - Adresser toutes questions à: Richard, Linda K.	**Buyer Id - Id de l'acheteur** hal219
Telephone No. - N° de téléphone (902) 496-5261 ( )	**FAX No. - N° de FAX** (902) 496-5016
Destination - of Goods, Services, and Construction: **Destination - des biens, services et construction:**	

Instructions: See Herein

Instructions: Voir aux présentes

Delivery Required - Livraison exigée	**Delivery Offered - Livraison proposée**
Vendor/Firm Name and Address **Raison sociale et adresse du fournisseur/de l'entrepreneur** **Telephone No. - N° de téléphone** **Facsimile No. - N° de télécopieur**	
Name and title of person authorized to sign on behalf of Vendor/Firm (type or print) **Nom et titre de la personne autorisée à signer au nom du fournisseur/ de l'entrepreneur (taper ou écrire en caractères d'imprimerie)** **Signature**	**Date**

Canada

AMENDMENT 001

This amendment is issued to replace TR-08-156 Section 3C and Section 3D which were blank in the original upload.

All other terms and conditions remain unchanged.

Section 03-C

Sample Flow Meter Dimensions

Classic Turbine Flow Sensor

Measures Flow Rate Providing Frequency or Analog Output

- Choice of high strength aluminum or Stressproof ® steel bodies
- Turbine flow measurement
- Flow accuracy ±1% of full scale
- Repeatability ±0.2%
- Pressures up to 6000 PSI (414 Bar)
- Temperatures up to 300 °F (150 °C)
- Optional IFC converter provides analog output

Flo-tech's Classic Turbine Flow Sensors measure the flow rate of hydraulic fluids and other compatible liquids. Offered in a choice of high strength anodized aluminum or Stressproof® steel bodies, these durable flow sensors are capable of withstanding pressures up to 6000 PSI (414 Bar).

The Classic Series with the standard magnetic pick-up provides a frequency signal that is proportional to flow rate and can be transmitted to Flo-tech's F6600/F6650 Series digital displays. If an analog output is preferred, these sensors are also available with the IFC (Intelligent Frequency Converter) which offers either a 4-20 mA or 0-5 VDC output signal, allowing easy integration with Flo-tech's F6700/F6750 Series digital displays, PCs, PLCs or other data acquisition devices.

SPECIFICATIONS

Performance

Forward Flow Accuracy:		
Magnetic pick-up	±1% of full scale (±1% of rate when used with F6600/F6650 display)	
IFC option	±1% of reading @ 32 cSt	
Repeatability:	±0.2%	
Turbine Response:	≤200ms	
Temperature:		
Fluid	-4 to +300 °F (-20 to +150 °C)	
Ambient	-4 to +131 °F (-20 to +55 °C)	
Operating Pressure:		
FSC, FSB Series	5000 PSI (345 Bar) maximum	
FSD Series	6000 PSI (414 Bar) maximum	
Pressure Drop:	See ΔP charts on page 24	
Magnetic Pick-up, Standard:		
Electrical Output Signal	Self-generating alternating pulse 100 mV RMS (100 Hz) minimum	
FSC-375 Series	10 mV RMS (200 Hz) minimum	
IFC Signal Converter, Optional:	**F to I**	**F to V**
Power:	Loop powered, 6V insertion loss max 10 to 30 VDC supply range	10 to 26 VDC
Inputs:	Magnetic Pick-up	Magnetic Pick-up
Frequency	0 to 3500 Hz	0 to 3500 Hz
Trigger Sensitivity	30 mV p-p	30 mV p-p
Frequency Measurement Accuracy	±1%	±1%
Analog Output:	4-20 mA current loop	0-5 VDC
Resolution	1:4000	1:4000
Temperature Drift	50 ppm / °C max	50 ppm / °C max
Response	1.6 seconds min	1.6 seconds min
Environmental:		
Ambient Temperature	-22 to +158 °F (-30 to +70 °C)	-22 to +158 °F (-30 to +70 °C)
Humidity	0-90%, non-condensing	0-90%, non-condensing

Material

Housing:	6013-T651 Aluminum; anodized
FSD Series	Stressproof® steel; zinc plate, dichromate finish
Turbine Rotor:	T416 Stainless steel
Bearings:	440C Stainless steel ball bearings
FSD Series	Tungsten carbide journal bearings
Rotor Shaft:	T303 Stainless steel
Rotor Supports:	6061-T6 Aluminum alloy
FSC-375, 500, 750	CA360 Brass
FSD Series	T303 Stainless steel
Hub Cones:	6061-T6 Aluminum alloy
FSC-500, 750, 1000, 1005 & FSB-1250, 1500 only	
Retaining Rings:	Steel; zinc plate
FSC-375 Series	T303 Stainless steel
Seals:	Buna N standard; Viton® and EPR optional
Magnetic Pick-up, Standard:	
Body	12L14 Steel; black oxide finish
Nut	12L14 Steel; zinc plate, dichromate finish
IFC (includes magnetic pick-up), Optional:	
Case	6061-T6 Aluminum; nickel plate
Connector	Brass; nickel plate
Ports	SAE J1926/1, Code 61 and Code 62: SAE J518

Classic Turbine Flow Sensor

Measures Flow Rate Providing Frequency or Analog Output

DIMENSIONS

FSC

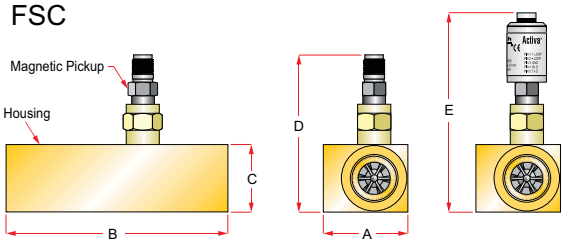

FSB

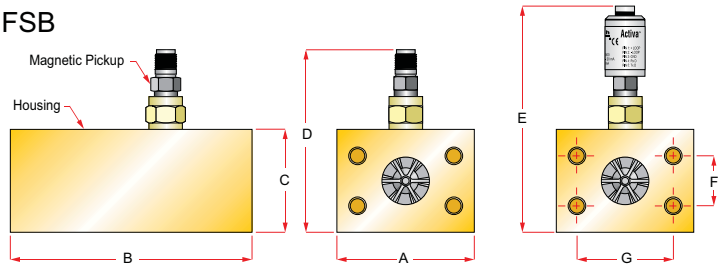

SERIES	A WIDTH IN (mm)	B LENGTH IN (mm)	C HEIGHT IN (mm)	D w/MAG IN (mm)	E w/IFC IN (mm)	F IN (mm)	G IN (mm)	WEIGHT[1] LBS (KG)
FSC-375	1.25 (32)	5.00 (127)	1.50 (38)	3.91 (99)	5.48 (139)	–	–	1.25 (0.57)
FSC-500	2.00 (51)	6.50 (165)	2.00 (51)	4.16 (106)	5.84 (148)	–	–	2.75 (1.25)
FSC-750	2.00 (51)	6.50 (165)	2.00 (51)	4.25 (108)	5.93 (151)	–	–	2.87 (1.30)
FSC-1000	2.50 (64)	6.50 (165)	2.00 (51)	4.34 (110)	5.97(152)	–	–	3.25 (1.47)
FSC-1005	2.50 (64)	6.50 (165)	2.00 (51)	4.34 (110)	5.97(152)	–	–	3.25 (1.47)
FSB-1250	4.00 (102)	7.00 (178)	3.00 (76)	4.94 (126)	6.43 (165)	1.188 (30.1)	2.312 (58.7)	7.75 (3.52)
FSB-1500	4.00 (102)	7.00 (178)	3.00 (76)	5.10 (130)	6.59 (167)	1.406 (35.7)	2.75 (69.9)	7.40 (3.36)
FSD-1250	2.12 (54)	7.50 (190)	2.125 (54)	4.50 (114)	5.17 (131)	–	–	6.12 (2.78)
FSD-1500	2.50 (64)	7.50 (190)	2.500 (64)	4.85 (123)	5.34 (135)	–	–	6.75 (3.06)
FSD-2000	3.12 (79)	8.25 (209)	3.125 (79)	5.39 (137)	5.45 (138)	–	–	8.55 (3.88)

[1] Weight is for sensors with standard magnetic pick-up installed. For sensors with IFC add .10 lbs.

FSD

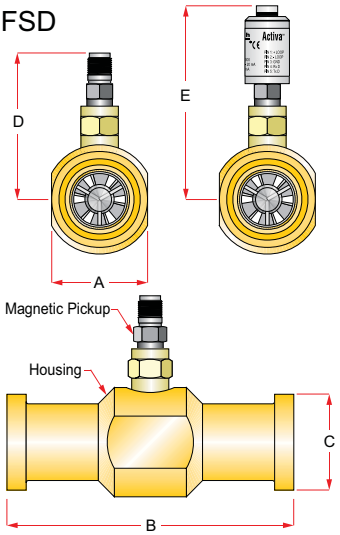

ORDERING INFORMATION

NOMINAL PORT SIZE	FLOW RANGE GPM (LPM)	SERIES	MODEL NUMBER Frequency Output	MODEL NUMBER 4-20 mA Output	MODEL NUMBER 0-5 VDC Output
SAE 8	0.4 - 7 (1.5 - 26)	FSC-375	F2945-ASCM[2]	F2945-ASCI	F2945-ASCV
SAE 12	1 - 15 (4 - 56)	FSC-500	F2082-ASCM	F2082-ASCI	F2082-ASCV
SAE 12	2 - 25 (7.5 - 94)	FSC-750	F2083-ASCM	F2083-ASCI	F2083-ASCV
SAE 16	3 - 60 (11.5 - 227)	FSC-1000	F2084-ASCM	F2084-ASCI	F2084-ASCV
SAE16	4 - 85 (15 - 321)	FSC-1005	F2084-ASCM8	F2084-ASCI8	F2084-ASCV8
SAE 20, Code 61, 4-Bolt Face	5 - 100 (20 - 378)	FSB-1250	F2085-ASBM	F2085-ASBI	F2085-ASBV
SAE 24, Code 61, 4-Bolt Face	7 - 200 (27 - 757)	FSB-1500	F2086-ASBM	F2086-ASBI	F2086-ASBV
SAE 20, Code 62, Flange Head	5 - 100 (20 - 378)	FSD-1250	F2085-SCDM	F2085-SCDI	F2085-SCDV
SAE 24, Code 62, Flange Head	7 - 200 (27 - 757)	FSD-1500	F2086-SCDM	F2086-SCDI	F2086-SCDV
SAE 32, Code 62, Flange Head	10 - 350 (37 - 1324)	FSD-2000	F2998-SCDM	F2998-SCDI	F2998-SCDV

TB3-14
TB3-13
TB3-4
TB1
TB2

[2] FSC-375 (F2945-ASCM) requires K-Factor Scaler, F5140 (see page 25), to amplify frequency signal to be compatible with Flo-tech's F6600/F6650 Digital Displays.

Examples:

F2084-ASCM = SAE 16 ports
3 - 60 GPM (11.5 - 227 LPM)
Frequency output
Buna N seals

F2086-ASBI = SAE 24, Code 61, 4-Bolt Face ports
7 - 200 GPM (27 - 757 LPM)
4-20 mA output
Buna N seals

ACCESSORIES

MODEL NUMBER	DESCRIPTION
F001109	5-Point Calibration Certificate[3]
F001110	10-Point Calibration Certificate[3]

[3] Certificates are traceable to NIST, ISO 9001.

For information about	Refer to
Digital Displays	Form No. 549
Pressure Sensors	Page 26
Temperature Sensor	Page 27
Cables	Pages 28 & 29

Section 03-D

Sketch of DIN Sleeve

Slip-In Logic Element Cavity

Modifications required for external flow meter installation.

To be used for flow meter installations TB1-16, TB2-16 and TB4-5.

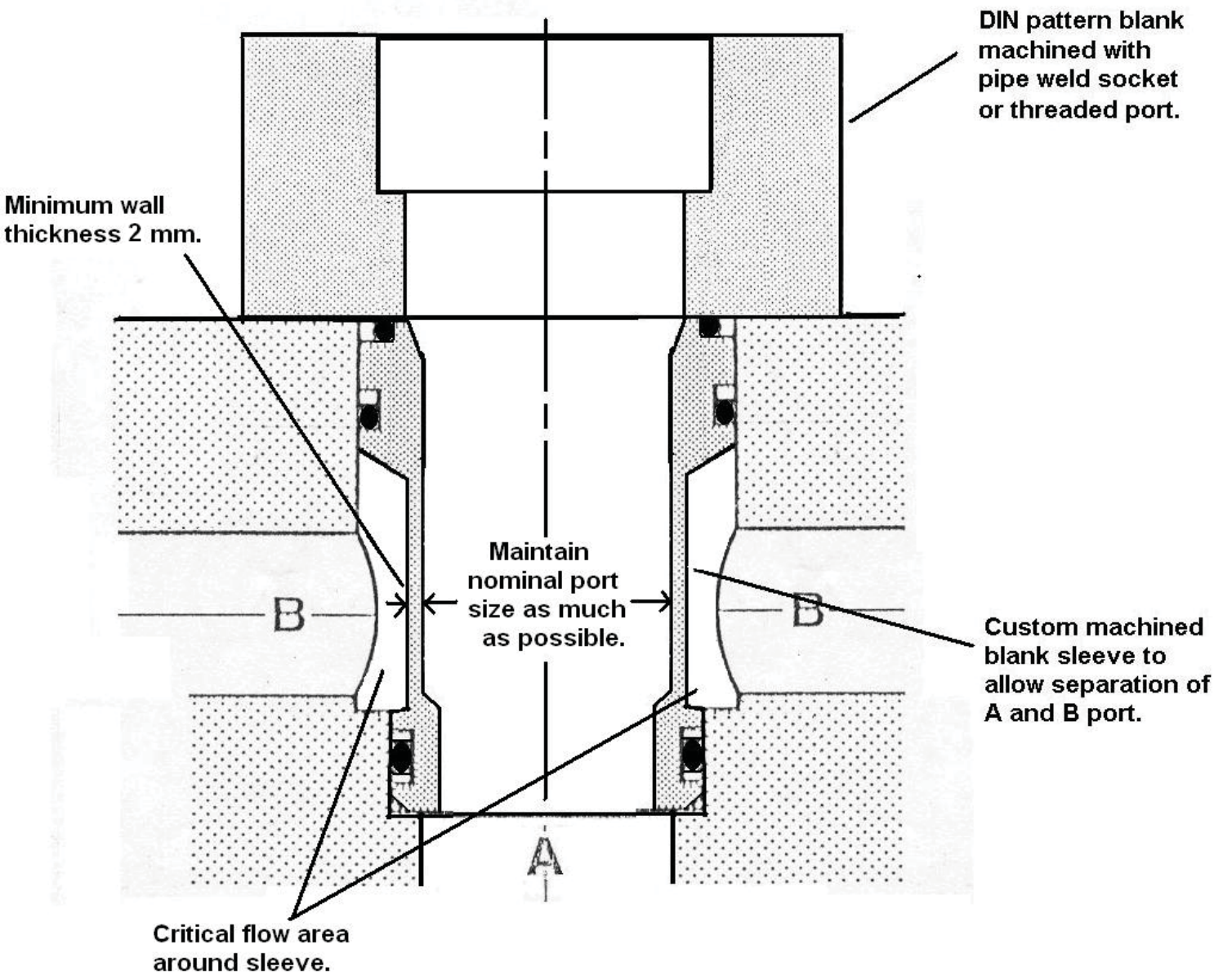

END OF SECTION