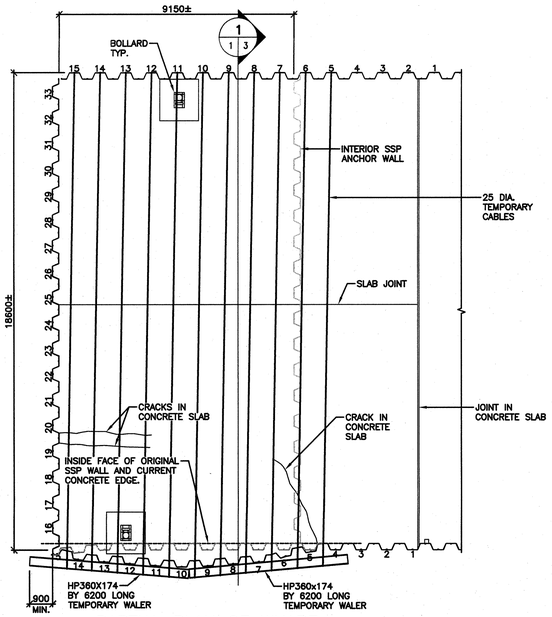

PARTIAL PLAN OF WHARF
SCALE: 1:100

CONSTRUCTION NOTES:

STRUCTURAL STEEL:

ALL MATERIALS, FABRICATION AND ERECTION TO BE TO CSA–S16, LATEST EDITION.

ALL STRUCTURAL STEEL HP SECTIONS, PLATES AND BARS SHALL CONFORM TO CAN/CSA–G.40.20/G40.21–04 AND BE MINIMUM GRADE 300W.

PIPE SECTIONS SHALL BE ASTM A53, SCHEDULE 40.

ALL WELDING SHALL CONFORM TO THE REQUIREMENTS OF W59–03, WELDED STEEL CONSTRUCTION.

ELECTRODES SHALL CONFORM TO THE REQUIREMENTS OF CSA W48–06.

CABLE AND RELATED HARWARD:

CABLE TO BE ROUND STRAND GENERAL PURPOSE WIRE ROPE, 43.1 TON NORMAL BREAKING LOAD, AS SUPPLIED BY WIRE ROPE INDUSTRIES, OR APPROVED ALTERNATE.

SUPPLY WITH STANDARD WIRE ROPE THIMBLES TO MATCH CABLE DIAMETER, AS SUPPLIED BY CROSBY, OR APPROVED ALTERNATE. TO BE HOT DIPPED GALVANIZED.

WIRE ROPE CLIPS TO BE BY CROSBY, OR APPROVED ALTERNATE. PROVIDE 660 mm, [26"], TURNBACK, TORQUE TO 225 ft•lb.

SHACKLES TO BE 38 mm, [1½"], BOLT–TYPE, 17 TON WORKING LOAD AS SUPPLIED BY CROSBY.

TEMPORARY CABLE SUPPORTS
SHIPPIGAN SSP WHARF

S1

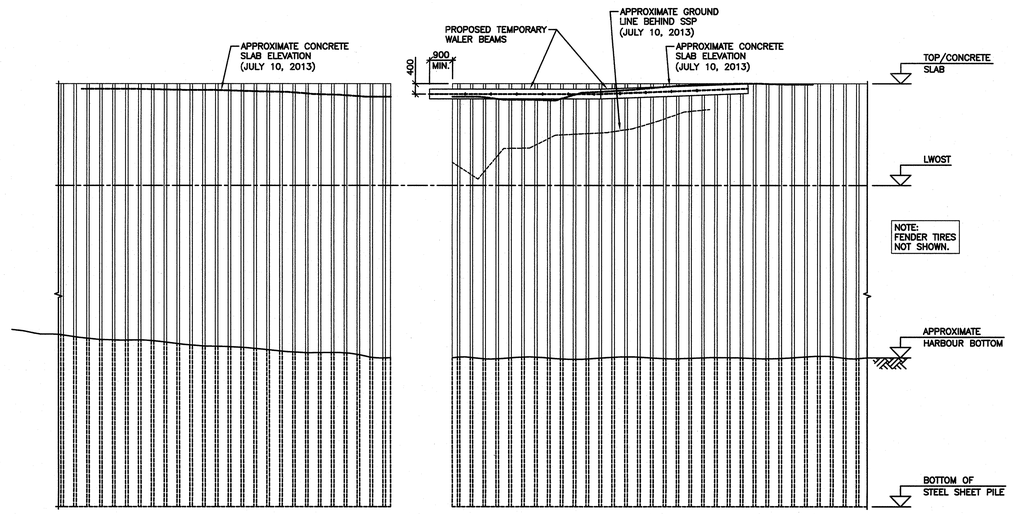

END WALL ELEVATION
SCALE: 1:100

SEAWARD WALL ELEVATION
– AREA OF FAILURE
SCALE: 1:100

TEMPORARY CABLE SUPPORTS
SHIPPIGAN SSP WHARF

S2

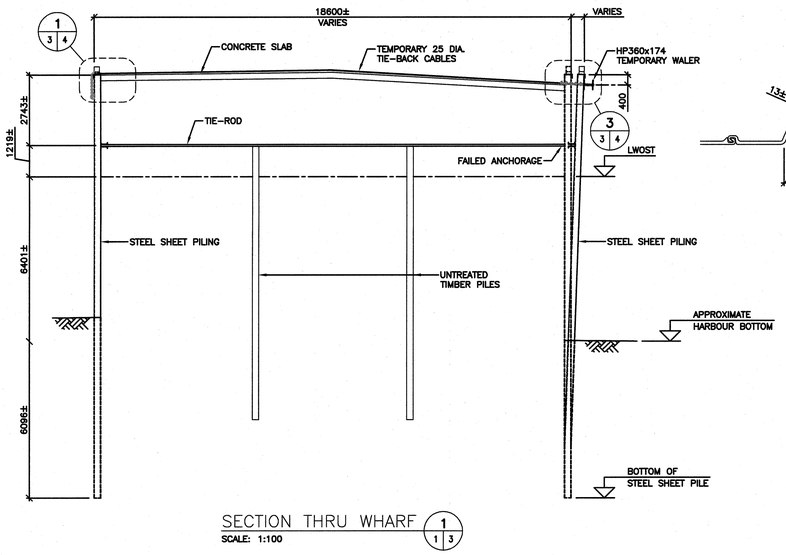

SECTION THRU WHARF
SCALE: 1:100

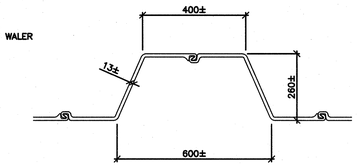

SSP DETAIL
SCALE: 1:10

TEMPORARY CABLE SUPPORTS
SHIPPIGAN SSP WHARF

S3

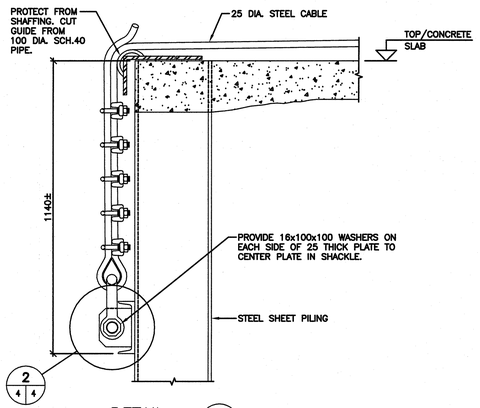

DETAIL 1
SCALE: 1:10

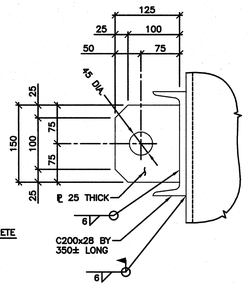

DETAIL 2
SCALE: 1:5

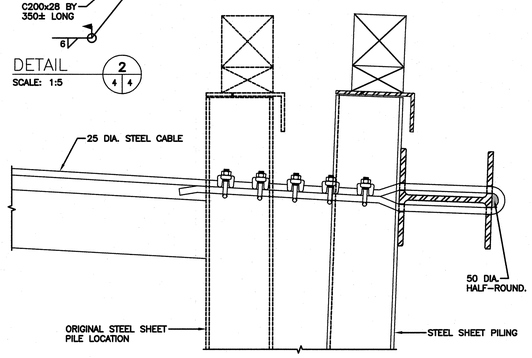

DETAIL 3
SCALE: 1:10

TEMPORARY CABLE SUPPORTS
SHIPPIGAN SSP WHARF

S4

Public Works and Government Services Canada / Travaux Publics et Services gouvernementaux Canada

ROCHE

revisions | date

project / projet
RECONSTRUCTION DU QUAI
WHARF RECONSTRUCTION
STRUCTURE 401
SHIPPAGAN
COMT. DE GLOUCESTER COUNTY

drawing / dessin
APPENDICES
ANNEXES

designed / conçu
date
drawn / dessiné
date
approved / approuvé
date
Tender / Soumission
PWGSC Project Manager / Administrateur de projets TPSGC
2015/01/20

project number / no. du projet
R.069388.001

drawing no. / no. du dessin
A29 de/of A 30

PWGSC B1 (2004)

E–DRM/GDD–E: 482725 Version 1