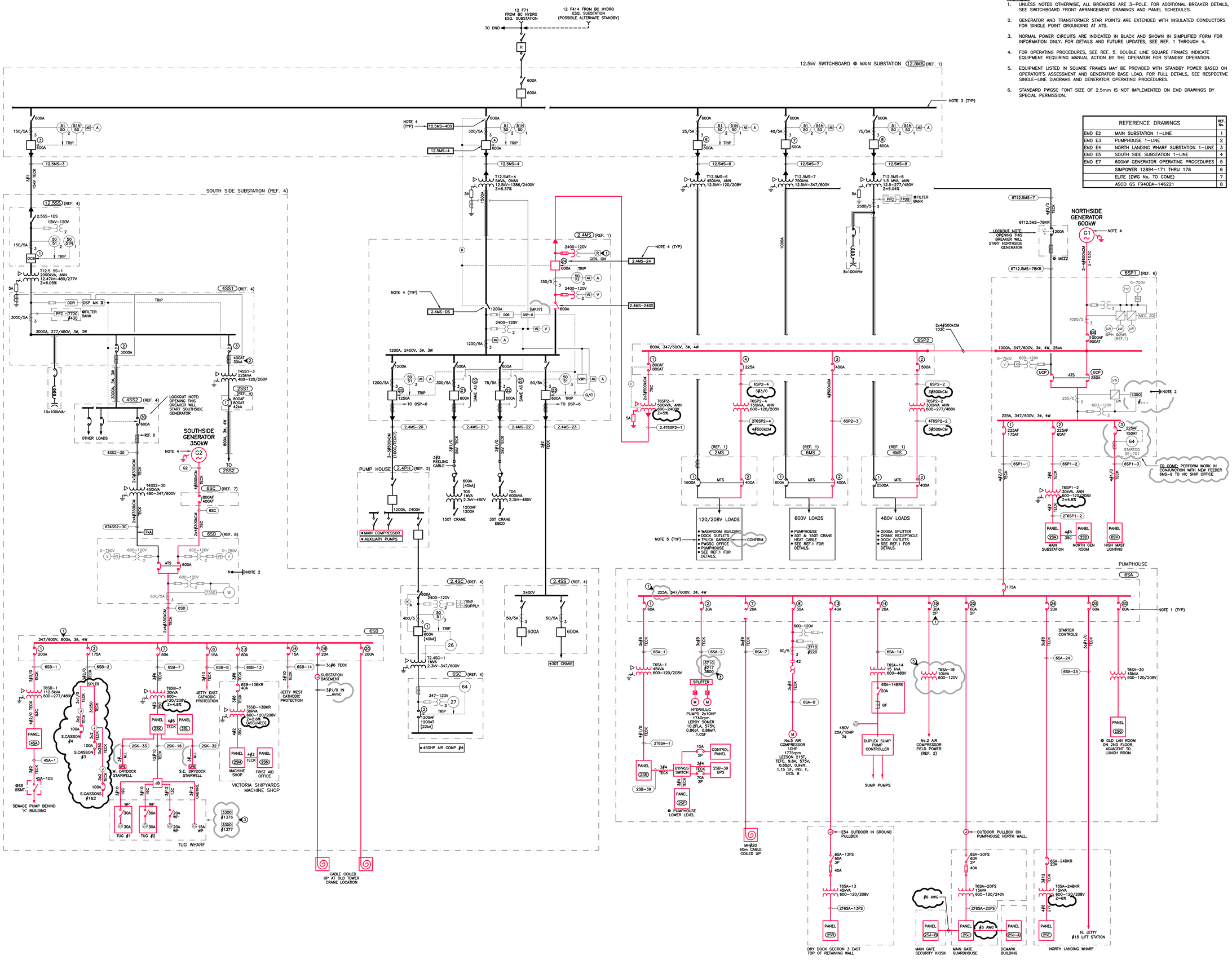


## NOTES:

1. UNLESS NOTED OTHERWISE, ALL BREAKERS ARE 3-POLE. FOR ADDITIONAL BREAKER DETAILS, SEE SWITCHBOARD FRONT ARRANGEMENT DRAWINGS AND PANEL SCHEDULES.
2. GENERATOR AND TRANSFORMER STAR POINTS ARE EXTENDED WITH INSULATED CONDUCTORS FOR SINGLE POINT GROUNDING AT ATS.
3. NORMAL POWER CIRCUITS ARE INDICATED IN BLACK AND SHOWN IN SIMPLIFIED FORM FOR INFORMATION ONLY. FOR DETAILS AND FUTURE UPDATES, SEE REF. 1 THROUGH 4.
4. FOR OPERATING PROCEDURES, SEE REF. 5. DOUBLE LINE SQUARE FRAMES INDICATE EQUIPMENT REQUIRING MANUAL ACTION BY THE OPERATOR FOR STANDBY OPERATION.
5. EQUIPMENT LISTED IN SQUARE FRAMES MAY BE PROVIDED WITH STANDBY POWER BASED ON OPERATOR'S ASSESSMENT AND GENERATOR BASE LOAD. FOR FULL DETAILS, SEE RESPECTIVE SINGLE-LINE DIAGRAMS AND GENERATOR OPERATING PROCEDURES.
6. STANDARD PWGSC FONT SIZE OF 2.5mm IS NOT IMPLEMENTED ON EMD DRAWINGS BY SPECIAL PERMISSION.

| REFERENCE DRAWINGS | | REF. No. |
|---|---|---|
| EMD E2 | MAIN SUBSTATION 1-LINE | 1 |
| EMD E3 | PUMPHOUSE 1-LINE | 2 |
| EMD E4 | NORTH LANDING WHARF SUBSTATION 1-LINE | 3 |
| EMD E5 | SOUTH SIDE SUBSTATION 1-LINE | 4 |
| EMD E7 | 600kW GENERATOR OPERATING PROCEDURES | 5 |
| | SIMPOWER 12894-171 THRU 176 | 6 |
| | ELITE (DWG No. TO COME) | 7 |
| | ASCO GS F940DA-146221 | 8 |

Public Works and Government Services Canada / Travaux publics et Services Gouvernementaux Canada

Pacific Region

GENIVAR


4396 WEST SAANICH ROAD, SUITE 130
VICTORIA, BRITISH COLUMBIA, CANADA V8Z 3E9
TELEPHONE: (250) 386-6721
FAX: (250) 386-2844


Project No. 207-12082

## TEMPORARY NOTES:

1. FIELD VERIFY.
2. VERIFY I.C. RATING.
3. VERIFY METERING CIRCUITS.
4. (NOT USED.)
5. VERIFY 1-PHASE TRANSFOMER WITH SECONDARY SWITCH.

| revisions | | date |
|---|---|---|
| 8 | BY TURKAN: ARC-FLASH STUDY FIELD DATA UPDATE. | 02 AUG 2013 |
| 7 | BY TURKAN: ISSUED FOR ARC-FLASH STUDY FIELD SURVEY REQUIREMENTS. | 03 DEC 2012 |
| 6 | BY PWGSC DM: ADDED SHOP MARKUPS. | 12 SEP 2012 |
| 5 | BY RFA: AS-BUILT OF GUARDHOUSE FEEDER; REMOVED TEMPORARY NOTE 4. | 19 DEC 2006 |
| 4 | BY RFA: REMOVED NOTE 7; AS BUILT - REMOVED TEMPORARY NOTE 6. | 14 NOV 2006 |
| 3 | BY RFA: ADDED BREAKER NO'S TO 6SA; TEMPORARY NOTE 6 ADDED FOR REMOVAL OF GARAGE FROM STANDBY SYSTEM | 20 JAN 2006 |
| 2 | BY RFA: GENERAL UPDATE; COMBINED WITH "OPERATING" DIAGRAM | 15 AUG 2005 |
| 1 | BY RFA: ADDED NGR FOR T6SP2-1; ISSUED FOR 2004 HV MAINTENANCE TENDER | 7 OCT 2004 |

A detail no. / no. du detail
B location drawing no. / sur dessin no.
C drawing no. / dessin no.

project / projet

# ESQUIMALT GRAVING DOCK ESQUIMALT, B.C.

## ELECTRICAL MASTER DRAWING

drawing / dessin

# STANDBY POWER SYSTEM SINGLE-LINE DIAGRAM

designed / conçu: M. K. ÇANÇAR
date
drawn / dessine: J.O. / A.S. / P.P.
date
approved / approuve
date
AS BUILT / Soummission
PWGSC Project Manager / Administrateur de projets TPSGC
project no. / no. du projet: —
drawing no. / no. du dessin: EMD E6 REV.8