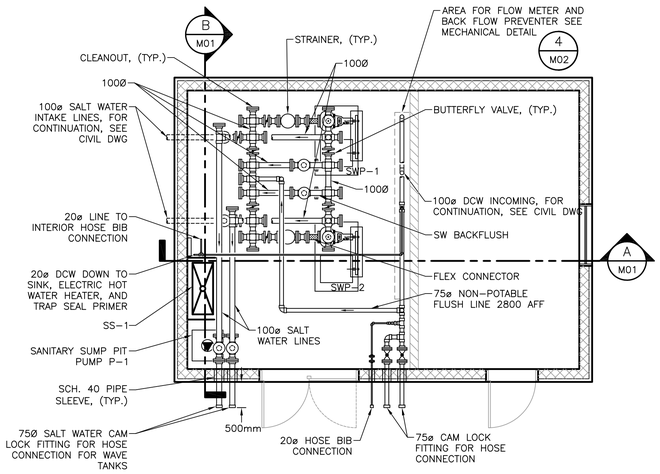


## MECHANICAL PLUMBING PLAN VIEW (1 / M01)

SCALE: 1:50

0m 1m 2m 3m 4m 5m

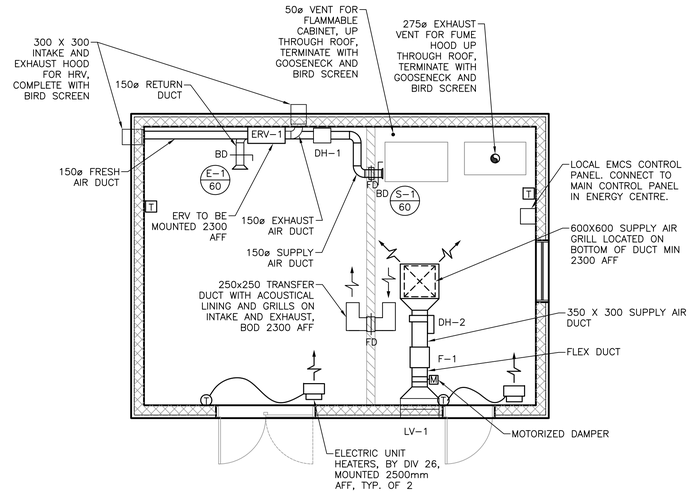


## MECHANICAL HVAC PLAN VIEW (2 / M01)

SCALE: 1:50

0m 1m 2m 3m 4m 5m

## LEGEND:

- DUCTING
- SUPPLY DIFFUSER
- RETURN/EXHAUST GRILLE
- MECHANICAL EQUIPMENT
- BD — BALANCE DAMPER
- FD — FIRE DAMPER
- PIPING
- UNDERGROUND SANITARY PIPE
- PUMP
- PIPE RISE
- PIPE ELBOW DROP
- GLOBE VALVE
- BUTTERFLY VALVE
- CHECK VALVE
- STRAINER
- FD-# — FLOOR DRAIN
- T — THERMOSTAT
- T — TEMPERATURE SENSOR

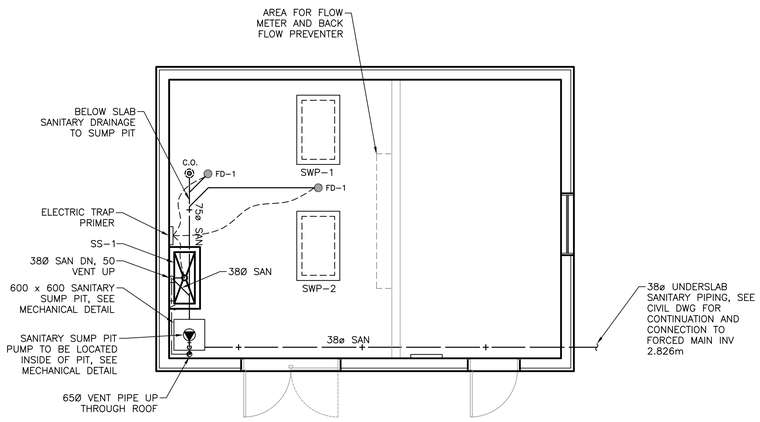


## MECHANICAL DRAINAGE PLAN VIEW (3 / M01)

SCALE: 1:50

0m 1m 2m 3m 4m 5m

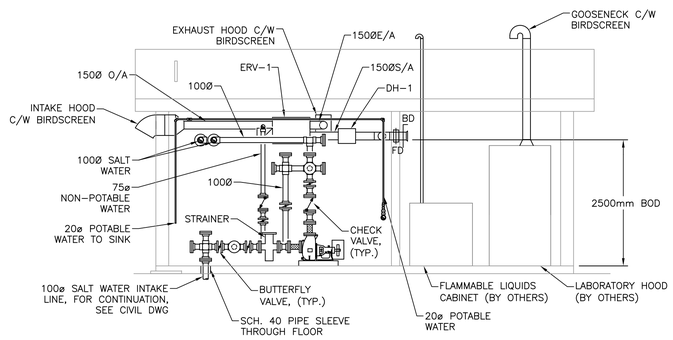


## SECTION A (A / M01)

SCALE: 1:50

0m 1m 2m 3m 4m 5m

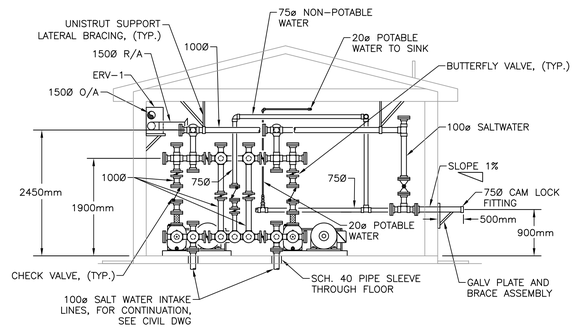


## SECTION B (B / M01)

SCALE: 1:50

0m 1m 2m 3m 4m 5m

Public Works and Government Services Canada / Travaux Publics et Services gouvernementaux Canada

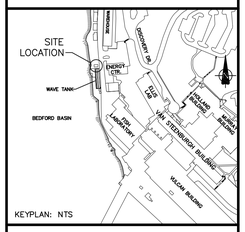


SNC·LAVALIN

SNC·LAVALIN Inc.
Halifax, Nova Scotia, Canada
Member of the SNC·LAVALIN Group

Certified ISO 9001

| revisions | | date |
|---|---|---|
| C01 | ISSUED FOR TENDER | 12/05/2014 |

project / projet

**BEDFORD INSTITUTE OF TECHNOLOGY WAVE TANK SALT WATER / FRESH WATER SUPPLY**

drawing / dessin

**MECHANICAL PLAN VIEW**

designed / conçu: MM
date
drawn / dessiné: MM
date
approved / approuvé: JM
date

Tender / Soumission
ALLAN MCNEILL
PWGSC Project Manager / Administrateur de projets TPSGC

project number / no. du projet: R.070629.001

drawing no. / no. du dessin: M01

621334-0001-D-ME-DWG-0009-01

PWGSC B1 (2004)

E-DRM/GDD-E: 502493