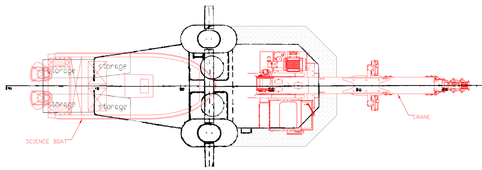

CASING TOP

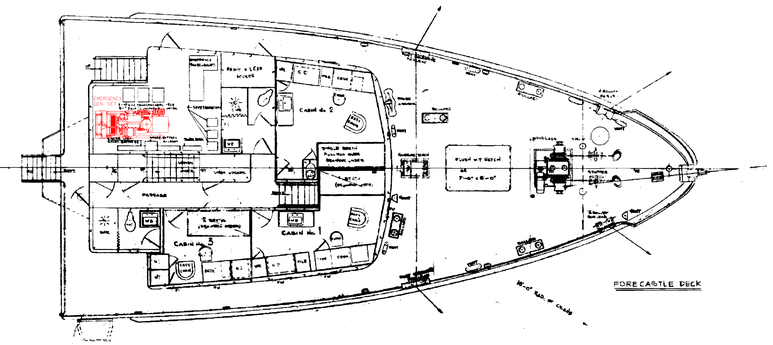

FORECASTLE DECK

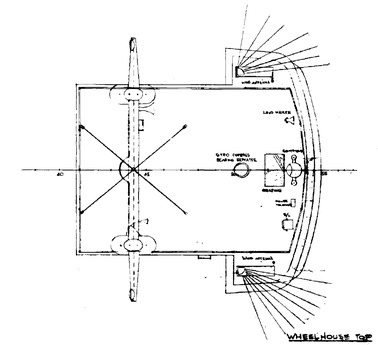

WHEELHOUSE TOP

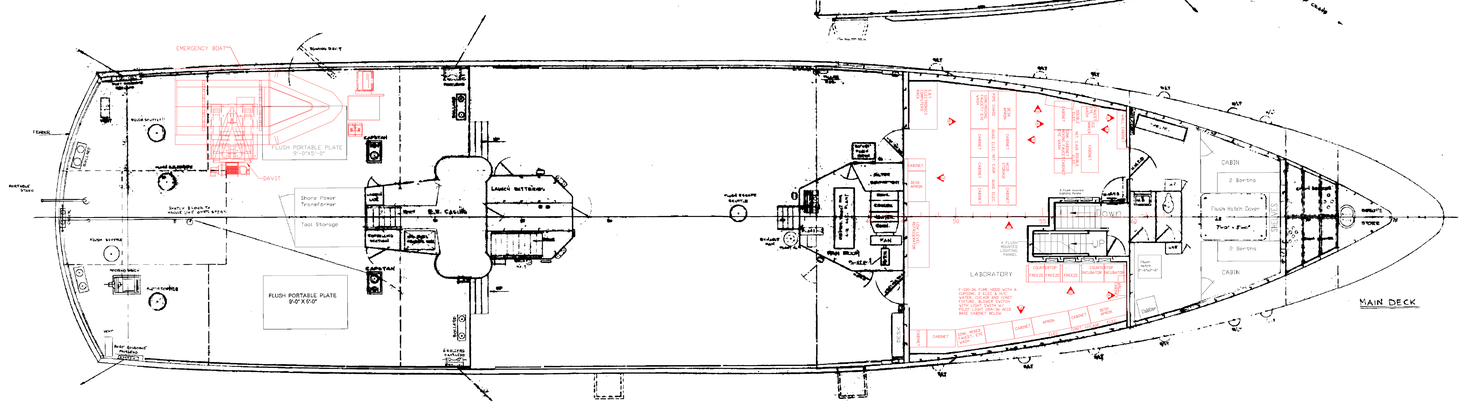

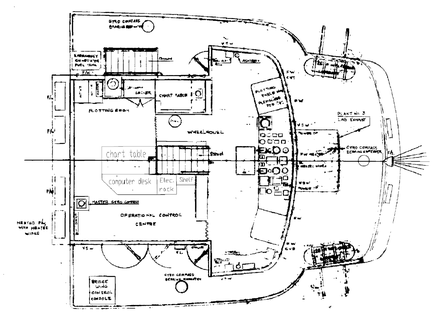

BRIDGE DECK

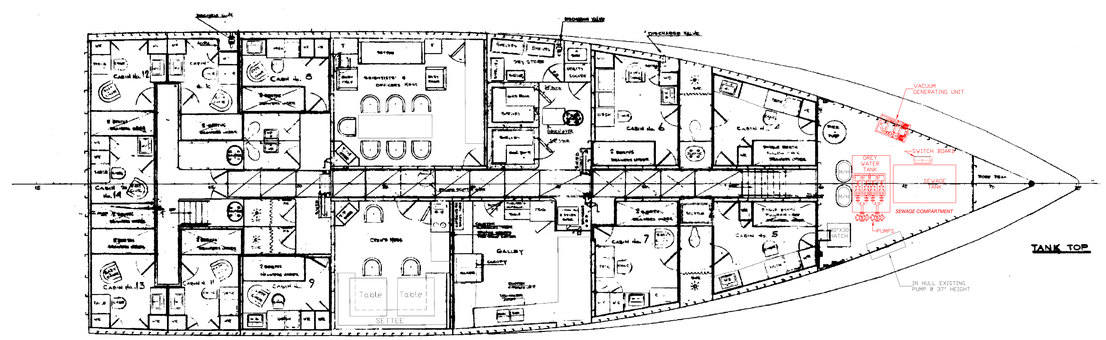

TANK TOP

LIST OF ABBREVIATIONS

A.P. = AFT PERPENDICULAR
CAL. = CALORIFIER
C.B. = CHART BENCHES
C.O. = CABLE REEL, SEE QUARTERMASTER DWG.
C.R.S. = CLEAR VIEW SCREEN
F.L. = FLOOD LIGHT
F.P. = FORWARD PERPENDICULAR
FREQ. = FREQUENCIES
F.W. = FIXED WINDOW
H.W.T.D. = HINGED WATER TIGHT DOOR
R.B.B. = PORT & STARBOARD
SHL. = SHOWER
S.L. = SEARCH LIGHT
S.W.T.D. = SLIDING WATER TIGHT DOOR
T. = TABLE
V.L. = VERTICAL LADDER
V.S.W. = VERTICAL SLIDING WINDOW
W.B. = WASH BASIN
W.C. = WATER CLOSET

CABIN ALLOCATION

CABIN No. 1 = CAPTAIN
CABIN No. 2 = CHIEF SCIENTIST + SPARE
CABIN No. 3 = 2 SCIENTISTS
CABIN No. 4 = SENIOR ENGINEER + SPARE
CABIN No. 5 = 1 MATE + 1 SPARE
CABIN No. 6 = 2 SCIENTISTS
CABIN No. 7 = 2 SCIENTISTS
CABIN No. 8 = 2 ENGINE ROOM P.O.
CABIN No. 9 = COOK + STEWARD
CABIN No. 10 = 1 BOSUN + 1 DECK HAND
CABIN No. 11 = BOSUN + STEWARD
CABIN No. 12 = 2 ENGINEER
CABIN No. 13 = 2 SEAMEN
CABIN No. 14 = 1 ENGINEER + 1 FITTER

PRINCIPAL DIMENSIONS

LENGTH OVERALL	187'-0"
LENGTH LOAD WATERLINE	175'-6"
BREADTH MOULDED	32'-0"
MEAN DRAFT MOULDED	8'-0"
DEPTH MOULDED	17'-0"
CAMBER ON MAIN DK AFT OF FR. 47	4"
ON MAIN DK FWD. OF FR. 47	NONE
ALL OTHER DECKS	9"

COMPLEMENT

SCIENTISTS	4
OFFICERS	6
CREW	8
SPARE BERTHS	12
TOTAL COMPLEMENT	30

SCALE: 1/4"=1'-0"

Rev No	REVISIONS	Date	App.
	HEDDLE MARINE SERVICE INC. (ISO 9001 : 2000 - CERTIFIED)	MAY/2010	
1	General Revision - As Fitted	Dec 14/99	