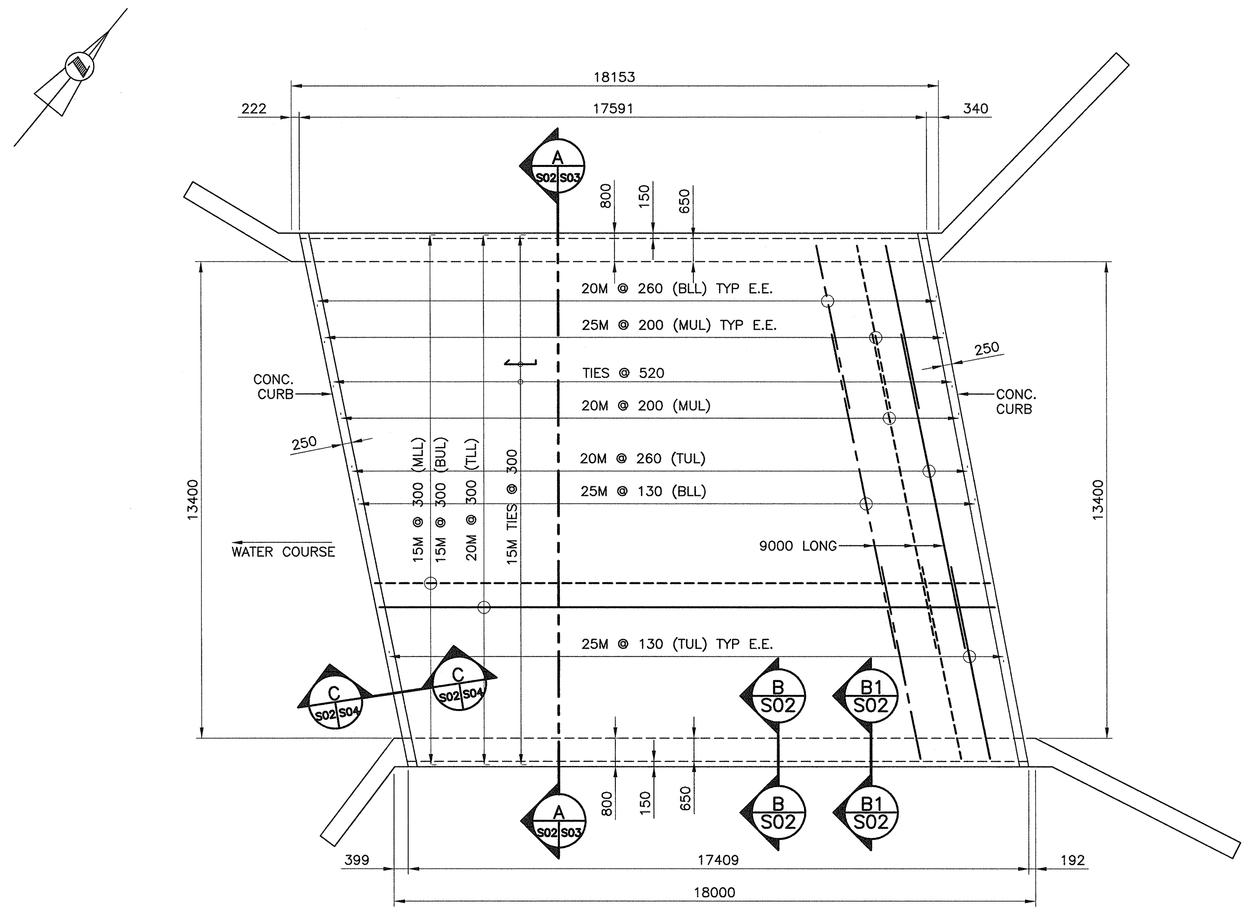

NOTE: WALL CONSTRUCTION JOINTS NOT SHOWN FOR CLARITY. SEE DWG S01.

TOP PLAN

SCALE : 1:100

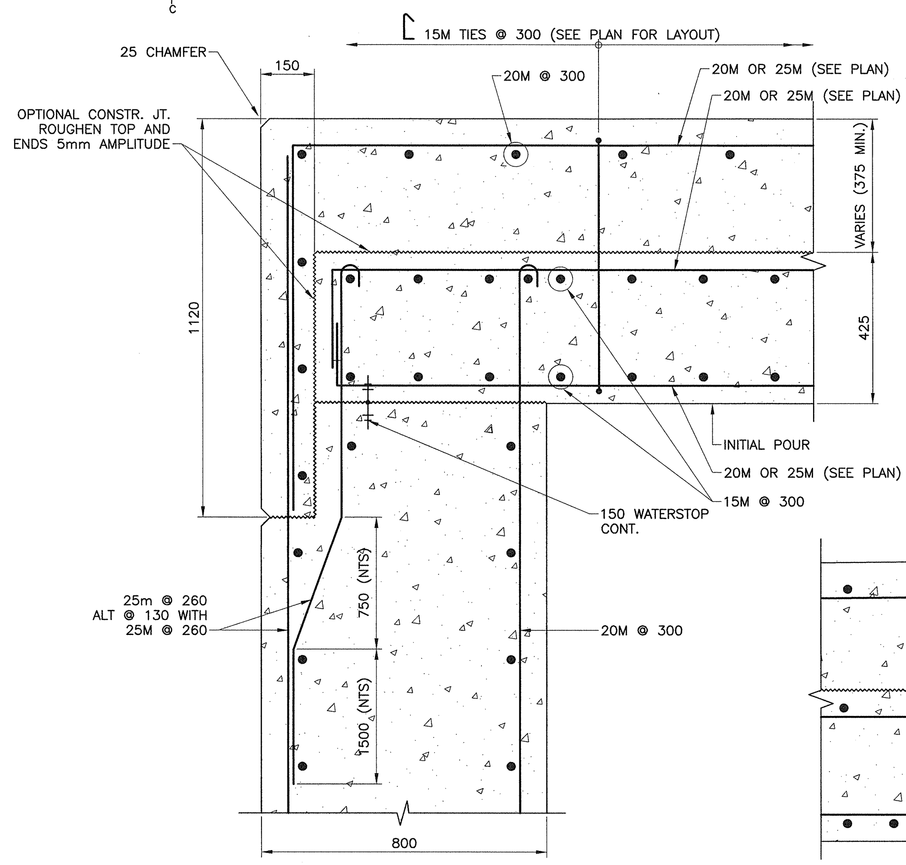

SECTION B/S02

SCALE : 1:10

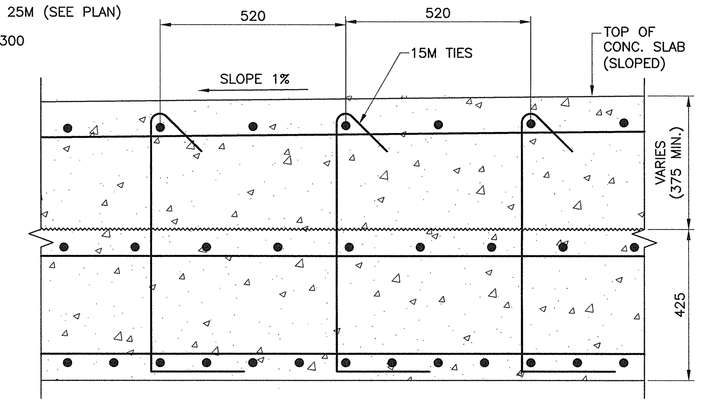

SECTION OF SLAB AT LONGITUDINAL DIRECTION

SCALE : 1:10

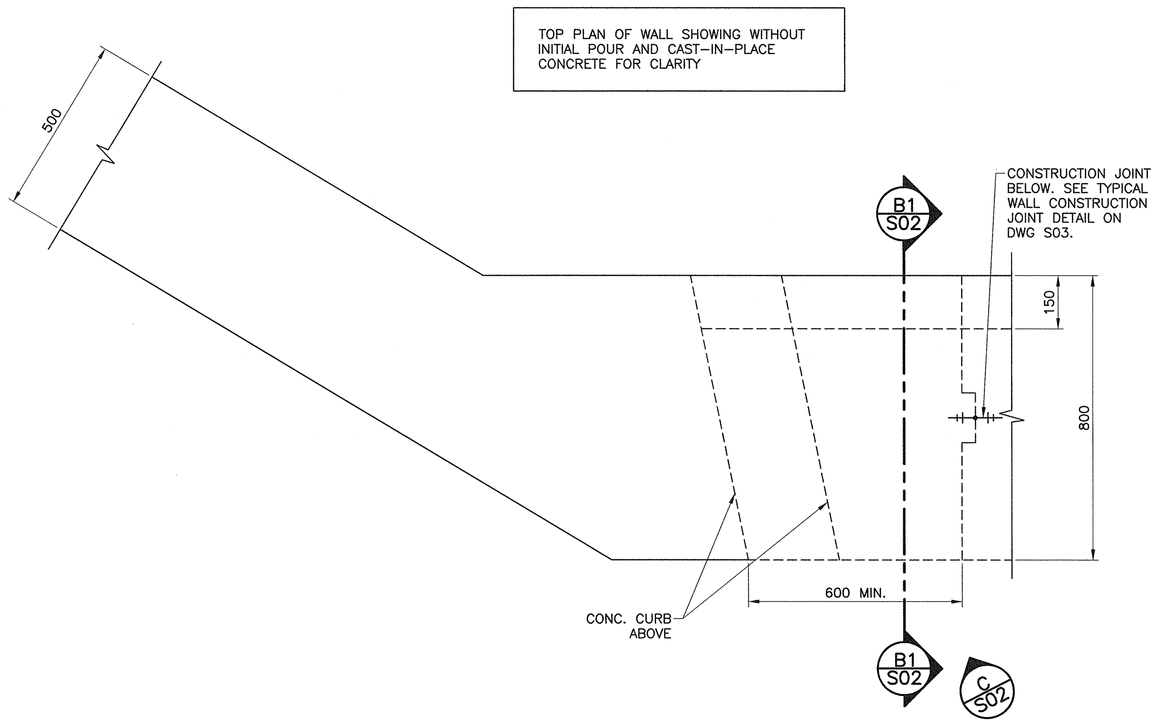

PLAN DETAIL 1/S02

SCALE : 1:10

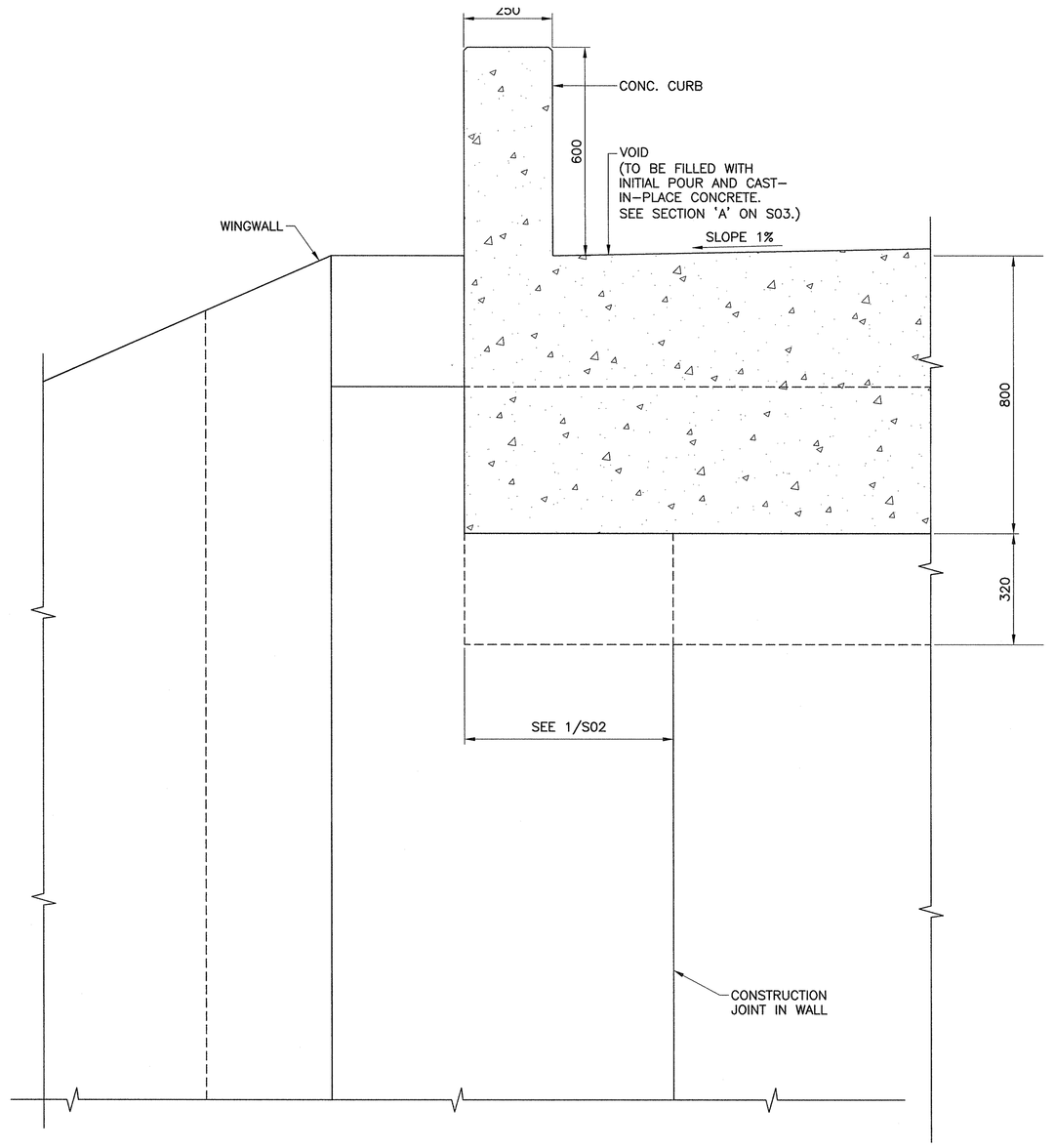

ELEVATION C/S02

SCALE : 1:10

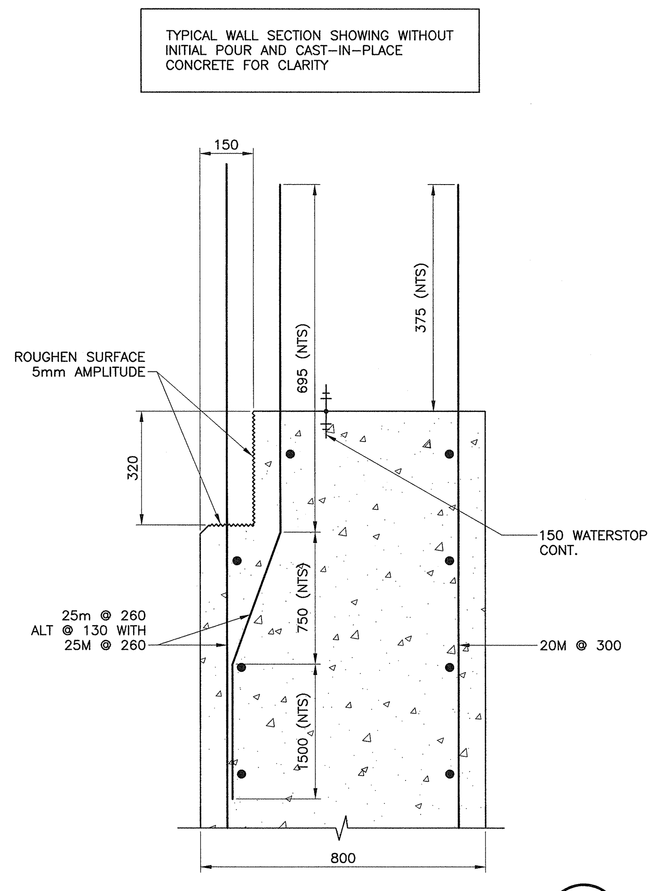

SECTION B1/S02

SCALE : 1:10

PWGSC B1 (2004)

Public Works and Government Services Canada / Travaux Publics et Services gouvernementaux Canada

SNC·LAVALIN

SNC·LAVALIN Inc.
Halifax, Nova Scotia, Canada
Member of the SNC·LAVALIN Group

PROVINCE OF NEWFOUNDLAND
PERMIT HOLDER
CLASS "A"
This Permit Allows
SNC-LAVALIN Inc.
To practice Professional Engineering in Newfoundland and Labrador. Permit No. as issued by PEGNL N0458 which is valid for the year 2015.

revisions		date
C02	ISSUED FOR TENDER	JAN 30 2015

project / projet

GROS MORNE NATIONAL PARK, NL
ROUTE 430
SHOAL COVE BROOK BRIDGE REPLACEMENT

drawing / dessin

TOP PLAN SECTIONS, ELEVATION AND DETAILS

designed / conçu: T.B.
date: MARCH 18, 2014
drawn / dessiné: E.T.G.
date: MARCH 18, 2014
approved / approuvé
date
Tender / Soumission
PWGSC Project Manager / Administrateur de projets TPSGC
project number / no. du projet: R.067782.001
drawing no. / no. du dessin: S02

616809-0001-D-ST-DWG-0014-01

E-DRM/GDD-E: # 482827