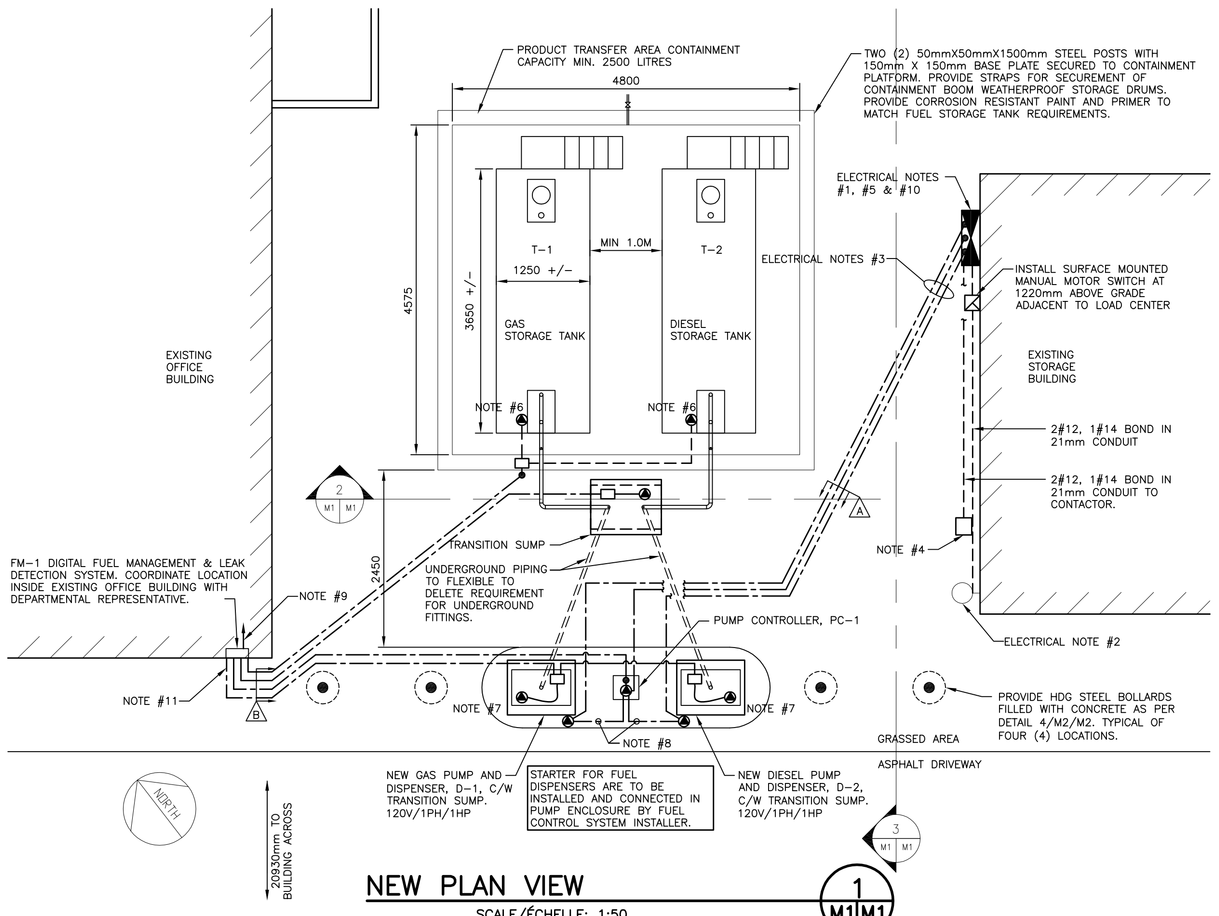

NEW PLAN VIEW

SCALE/ÉCHELLE: 1:50

0m 1m 2m 3m 4m 5m

1 M1 M1

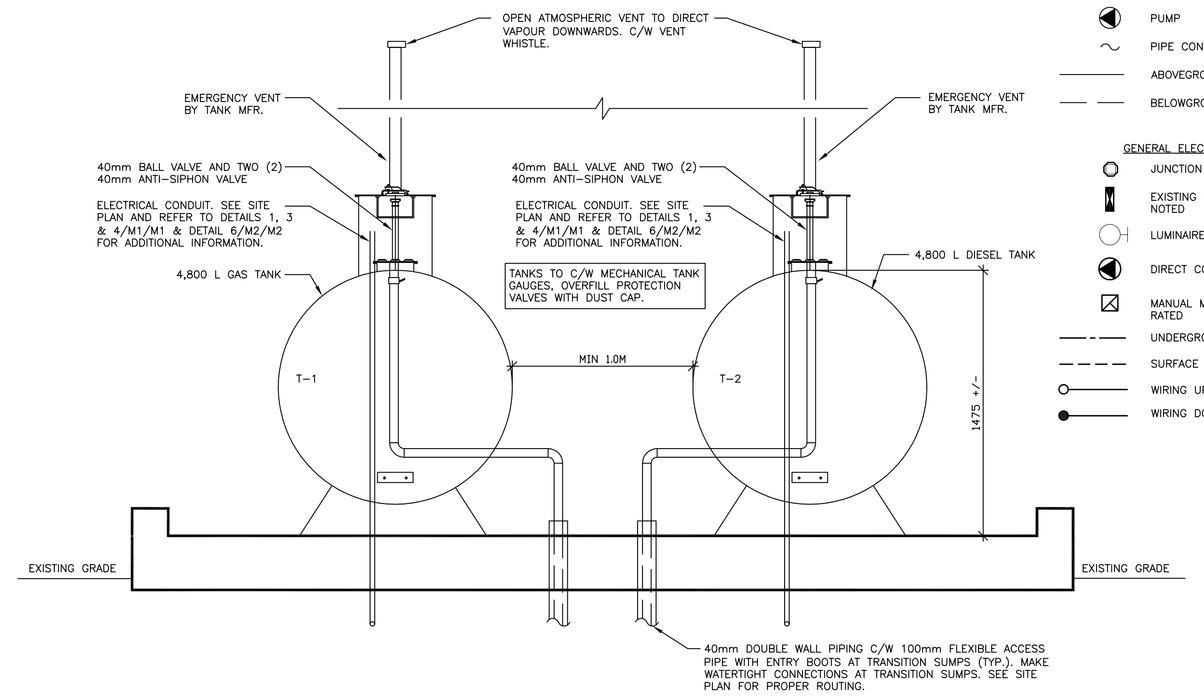

A/G FUEL TANKS AND ELEVATION FRONT VIEW

SCALE : 1:20

0mm 500mm 1000mm 1500mm 2000mm 2500mm

2 M1 M1

GENERAL MECHANICAL LEGEND

- PIPE RISER / DROP
- ANTI SIPHON VALVE
- UNION
- CHECK VALVE
- BALL VALVE
- PUMP
- PIPE CONTINUATION
- ABOVEGROUND FUEL PIPE
- BELOWGROUND FUEL PIPE

GENERAL ELECTRICAL LEGEND

- JUNCTION BOX
- EXISTING POWER PANEL AS NOTED
- LUMINAIRE, WALL MOUNTED
- DIRECT CONNECTION
- MANUAL MOTOR SWITCH NEMA 4X RATED
- UNDERGROUND WIRING
- SURFACE MOUNTED WIRING
- WIRING UP
- WIRING DOWN

ELECTRICAL NOTES:

1. EXISTING 120/240V, SINGLE PHASE, THREE WIRE, 40A MB SIEMENS LOADCENTER LOCATED IN EXISTING CSA TYPE 3R ENCLOSURE. REUSE EXITING 15A/1P SIEMENS TYPE Q CIRCUIT BREAKER LOCATED IN POSITION 3 FOR NEW FUEL PUMP CONTROLLER, AND PROVIDE ONE NEW 15A/1P CIRCUIT BREAKER IN POSITION 1 FOR NEW LIGHTING BRANCH CIRCUIT AND TWO NEW 20A/1P CIRCUIT BREAKERS IN POSITIONS 5 & 7 FOR NEW FUEL PUMPS AS INDICATED.

2. SUPPLY AND INSTALL ONE SURFACE MOUNTED LED WALL PACK C/W BUTTON TYPE PHOTOCELL AT 3048MM AFF FOR PUMPING STATION LIGHTING.

3. NEW CABLING TO BE INSTALLED IN DIRECT BURIED RIGID METAL CONDUIT C/W POTTED EYS FITTINGS OR SEALING SYSTEM INSTALLED IN ACCORDANCE WITH CSA 22.1-12 SECTION 18 AND 20 FOR CLASS 1 ZONE 1 HAZARDOUS LOCATIONS.

4. SUPPLY AND INSTALL ONE TWO-POSITION, TWIST RELEASE, SURFACE MOUNTED EMERGENCY STOP BUTTON INSTALLED IN A NEMA 3R RATED ENCLOSURE AT 1067mm ABOVE GRADE. WIRE EMERGENCY STOP BUTTON TO CONTACTOR SUCH THAT ACTUATION OF THE EMERGENCY STOP BUTTON DISCONNECTS POWER TO BOTH DISPENSER PUMPS AND PUMP CONTROLLER. PROVIDE A LAMACOID NAMEPLATE ABOVE EMERGENCY STOP BUTTON WHICH READS "EMERGENCY SHUT-OFF"

5. UPDATE PANEL SCHEDULES WITH A NEW TYPED PANEL DIRECTORY.

6. SURFACE MOUNTED ONE 100mm X 100mm X 50mm CAST EXPLOSION PROOF JUNCTION BOX TO MECHANICAL LINE SUPPORTS AND SPLICE PROBE LEADER CABLE WITH SILICONE FILLED MARRETTES TO 2c#18 CONTROL CABLE. EXTEND CONTROL CABLE THROUGH RIGID METAL CONDUIT AND POTTED EYS FITTINGS TO FUEL MANAGEMENT CONTROLLER AS INDICATED. CONNECTION TO FUEL MANAGEMENT CONTROLLER AND PROBES BY FUEL CONTROL SYSTEM INSTALLED.

7. SURFACE MOUNT ONE 100mm X 100mm X 50mm CAST EXPLOSION PROOF JUNCTION BOX TO WALL OF SUMP PIT AND SPLICE FLOAT SENSOR LEADER CABLE WITH SILICONE FILLED MARRETTES TO 2c#18 CONTROL CABLE. EXTEND CONTROL CABLE THROUGH RIGID METAL CONDUIT AND POTTED EYS FITTINGS TO FUEL MANAGEMENT CONTROLLER AS INDICATED. CONNECTION TO FUEL MANAGEMENT CONTROLLER AND PROBES BY FUEL CONTROL SYSTEM INSTALLED.

8. 6c#22 (3PR) STRANDED SHIELDED COMMUNICATIONS CABLE IN 16mm RIGID METAL CONDUIT AND 2#12, 1#14 BOND IN 16mm RIGID CONDUIT UNDER CONCRETE SLAB FROM PUMP CONTROLLER TO EACH DISPENSER.

9. INSTALL ONE CAT 6 COMMUNICATIONS CABLE IN 21mm PVC CONDUIT FROM THE FUEL MANAGEMENT CONTROLLER THROUGH THE EXTERIOR WALL TO A NEW SURFACE MOUNTED COMMUNICATIONS OUTLET BOX LOCATED IN THE OFFICE ON THE OPPOSITE SIDE OF THE WALL. PROVIDE A MOVO OUTLET AND 3 METER CAT 6 PATCH CORD C/W RJ-45 JACKS TO CONNECT EXISTING WORKSTATION TO THE FUEL MANAGEMENT CONTROLLER. COORDINATE EXACT LOCATION OF OUTLET ON SITE WITH DEPARTMENTAL REPRESENTATIVE.

10. DISPENSER PUMPS AND DISPENSER CONTROLLER CIRCUIT TO BE WIRED THROUGH A MECHANICALLY OPERATED, ELECTRICALLY HELD CONTACTOR LOCATED ADJACENT TO THE EXISTING LOADCENTER. CONTACTOR SOLENOID TO BE RAPID ACTION, IEC AC4 RATED FOR LOAD WITH BI METALLIC OVERLOADS AND 1-N/O & 1-N/C SPARE CONTACTS. CONTROL TRANSFORMER TO BE 120-24V SINGLE PHASE DRY TYPE 50 VA, C/W PRIMARY AND SECONDARY FUSES. CONTACTOR TO BE WIRED TO EMERGENCY STOP PUSHBUTTON IN ACCORDANCE WITH THE MANUFACTURERS WIRING INSTRUCTIONS. CONTROL TRANSFORMER AND CONTACTOR TO BE LOCATED IN NEMA TYPE 3R RATED ENCLOSURE.

11. WIRE 2#12, 1#14 BOND IN 21mm CONDUIT TO NEW 15A/1P BREAKER LOCATED IN EXISTING PANELBOARD IN OFFICE BUILDING. COORDINATE EXACT LOCATION AND TYPE OF LOADCENTER ON SITE WITH THE DEPARTMENTAL REPRESENTATIVE. PROVIDE LOCKON DEVICES FOR BREAKER.

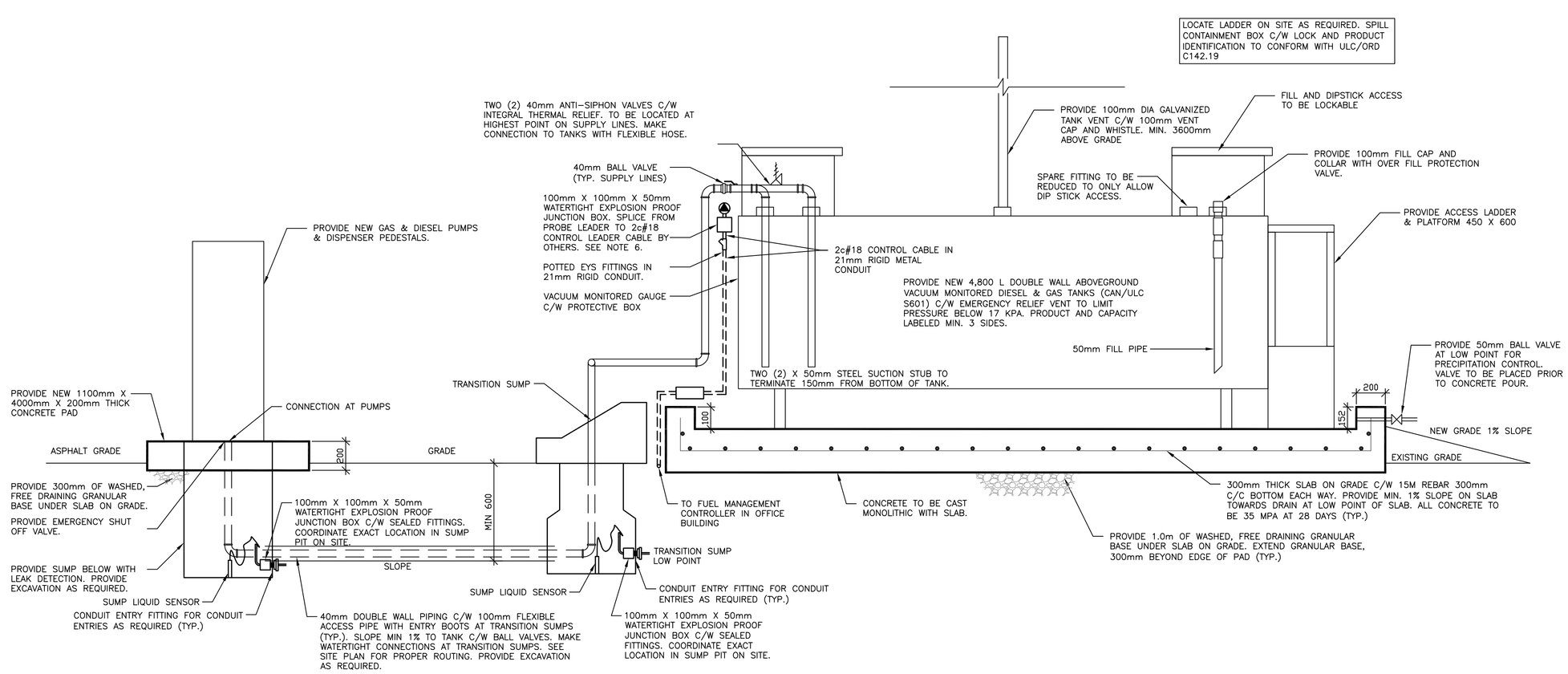

A/G FUEL TANKS AND ELEVATION SIDE VIEW

SCALE : 1:20

0mm 500mm 1000mm 1500mm 2000mm 2500mm

3 M1 M1

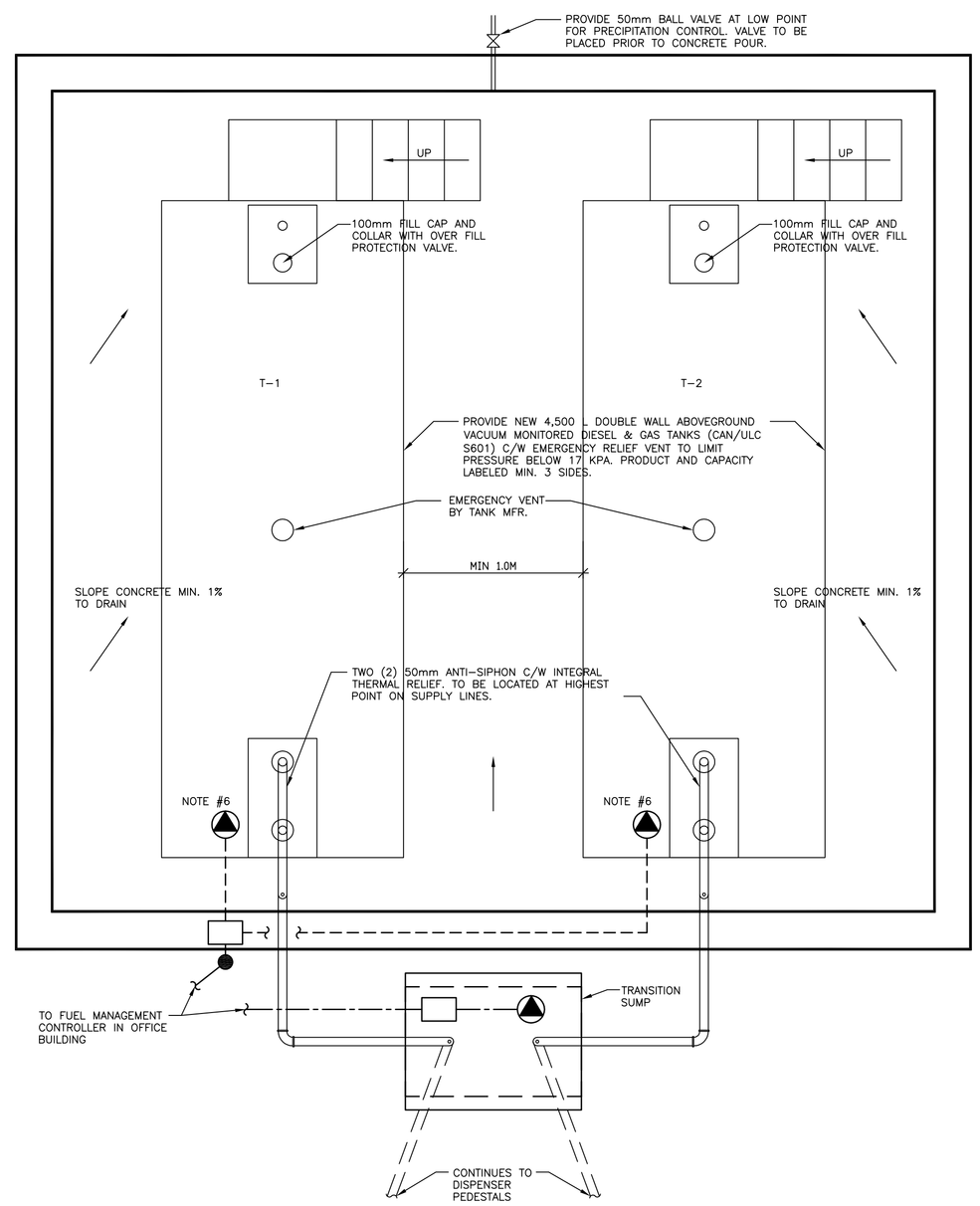

A/G FUEL TANKS AND ELEVATION TOP VIEW

SCALE : 1:20

0mm 500mm 1000mm 1500mm 2000mm 2500mm

4 M1 M1

Coles Associates
architecture, engineering, project management
Charlottetown, P.E.I., Canada, C1A 7L3
Phone (902) 368-2300 Fax (902) 566-3768
www.colesassociates.com

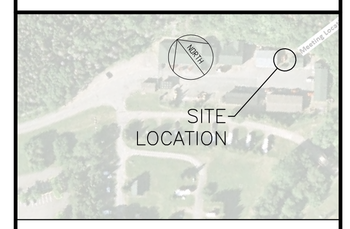

A detail no. / no. du detail
B location drawing no. / sur dessin no.
C drawing no. / dessin no.

revisions		date
2.	ISSUED FOR TENDER	2015/3/11
1.	ISSUED FOR 95% REVIEW	2015/2/25

project / projet: PARKS CANADA – FUEL TANK SYSTEM REPLACEMENT CHETICAMP, NS

drawing / dessin: MECHANICAL & ELECTRICAL SITE PLAN

designed / conçu: AAP, EIT
date: 2015-02-25
drawn / dessiné: AAP, EIT
date: 2015-02-25
approved / approuvé: SWW, P. ENG.
date: 2015-02-25
Tender / Soumission: Parks Canada Departmental Representative
project number / no. du projet: 143005
drawing no. / no. du dessin: M1