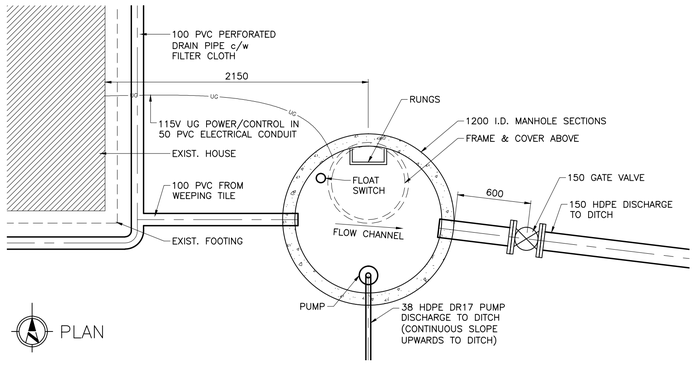

PLAN

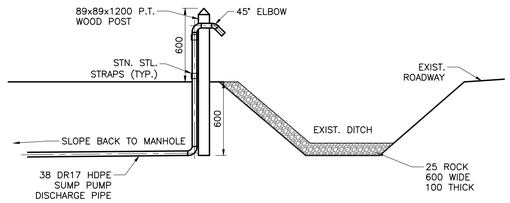

WEEPING TILE PUMP DISCHARGE DETAIL (3/1)

SCALE: NTS

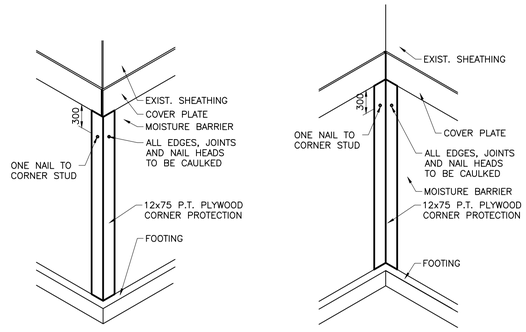

FOUNDATION PROTECTION OF CORNERS DETAIL (4/1)

SCALE: 1:40

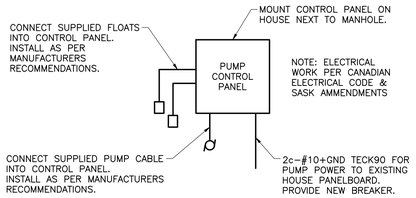

WEEPING TILE PUMP CONTROL SCHEMATIC

SCALE: N.T.S.

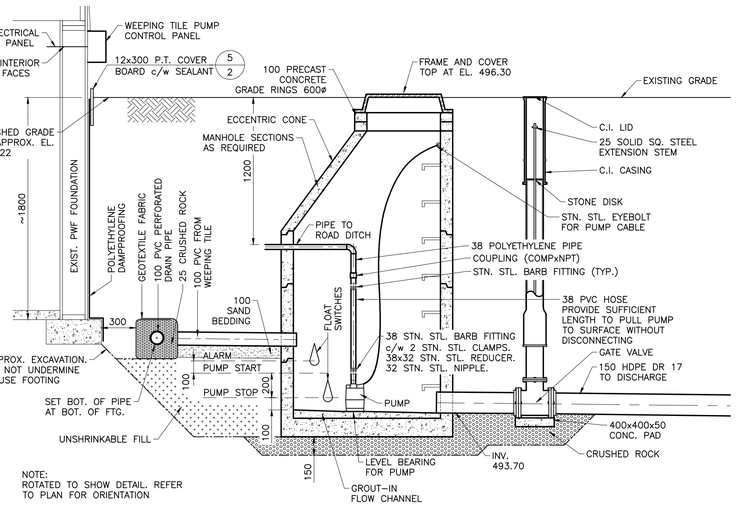

SECTION

WEEPING TILE MANHOLE (1/1)

SCALE: 1:25

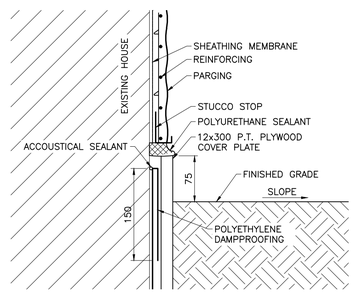

FOUNDATION COVER BOARD DETAIL (5/2)

SCALE: 1:5

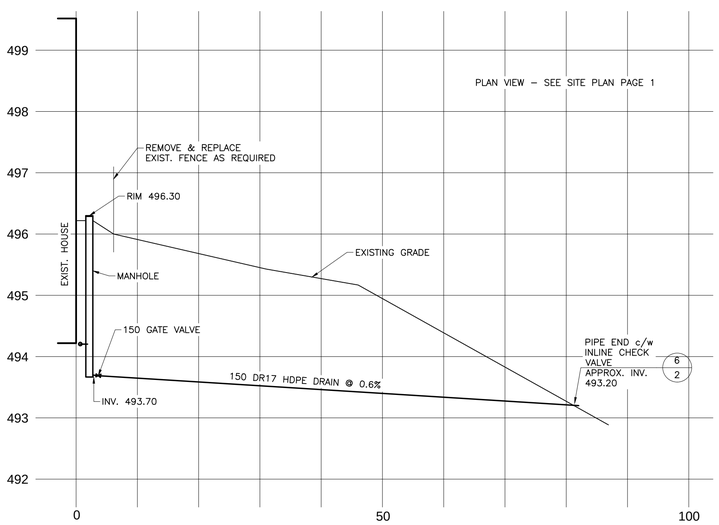

DRAIN PIPE PROFILE (2/1)

SCALE: 1:500

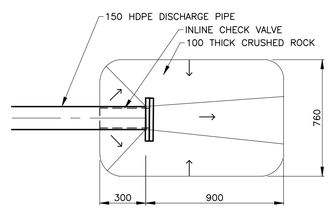

DISCHARGE PLAN (6/2)

SCALE: 1:20

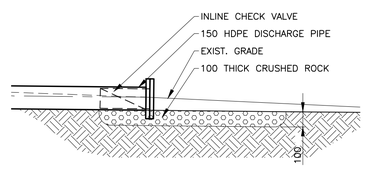

DISCHARGE SECTION (6/2)

SCALE: 1:20

Public Works and Government Services Canada / Travaux publics et Services gouvernementaux Canada

REAL PROPERTY SERVICES
Western Region
SERVICES IMMOBILIERS
Région de l'ouest

CATTERALL & WRIGHT
CONSULTING ENGINEERS
1221 - 8th Street East
SASKATOON SK S7H 0S5
Tel: (306) 343-7280, Fax: (306) 956-3199
C&W Drg. No. 286-00502

PROFESSIONAL ENGINEER
S. M. McLEOD
MEMBER 12926
14 09 03
YR. MN. DAY
SASKATCHEWAN

DO NOT SCALE DRAWINGS

Revision/ Revision	Description/Description	Date/Date
6	RE-ISSUED FOR BID	15/02/05

Client/client

PUBLIC WORKS & GOVERNMENT SERVICES CANADA

Project title/Titre du projet

LAST MOUNTAIN LAKE NATIONAL WILDLIFE AREA SIMPSON, SK

BASEMENT REPAIRS RESIDENTIAL HOUSE

Approved by/Approuvé par

Designed by/Concept par
SMM

Drawn by/Dessiné par
BDS/NMM/EMF

PWGSC Project Manager/Administrateur de Projets TPSGC

PWGSC, Architectural and Engineering Resources Manager/ Ressources Architectural et de Directeur d'Ingénierie, TPSGC

Client/client

Drawing title/Titre du dessin

SITE DETAILS

Project No./No. du projet	Sheet/Feuille	Revision no./ La Révision no.
R.052967.001	02 OF 03	6

286-005