Public Works and Government Services Canada

Travaux publics et Services gouvernementaux Canada

RETURN BIDS TO:
RETOURNER LES SOUMISSIONS À:
Bid Receiving - PWGSC / Réception des soumissions - TPSGC
11 Laurier St. / 11, rue Laurier
Place du Portage , Phase III
Core 0B2 / Noyau 0B2
Gatineau, Québec K1A 0S5
Bid Fax: (819) 997-9776

INVITATION TO TENDER
APPEL D'OFFRES

Tender To: Public Works and Government Services Canada

We hereby offer to sell to Her Majesty the Queen in right of Canada, in accordance with the terms and conditions set out herein, referred to herein or attached hereto, the goods, services, and construction listed herein and on any attached sheets at the price(s) set out therefor.

Soumission aux: Travaux Publics et Services Gouvernementaux Canada

Nous offrons par la présente de vendre à Sa Majesté la Reine du chef du Canada, aux conditions énoncées ou incluses par référence dans la présente et aux annexes ci-jointes, les biens, services et construction énumérés ici et sur toute feuille ci-annexée, au(x) prix indiqué(s).

Comments - Commentaires

Title - Sujet
CCGS HENRY LARSEN-VLE DRYDOCK REFIT

Solicitation No. - N° de l'invitation F7049-140431/A	**Date** 2015-04-22
Client Reference No. - N° de référence du client F7049-140431	**GETS Ref. No. - N° de réf. de SEAG** PW-$$MD-027-25097
File No. - N° de dossier 027md.F7049-140431	**CCC No./N° CCC - FMS No./N° VME**

Solicitation Closes - L'invitation prend fin
at - à 02:00 PM
on - le 2015-05-29

Time Zone
Fuseau horaire
Eastern Daylight Saving Time EDT

F.O.B. - F.A.B.
Plant-Usine: ☐ **Destination:** ☐ **Other-Autre:** ☐

Address Enquiries to: - Adresser toutes questions à: Haydock(MDDIV), Mark	**Buyer Id - Id de l'acheteur** 027md
Telephone No. - N° de téléphone (819) 956-0645 ( )	**FAX No. - N° de FAX** ( ) -

Destination - of Goods, Services, and Construction:
Destination - des biens, services et construction:
DEPARTMENT OF FISHERIES AND OCEANS
C/O SUPPLY DEPOT
SOUTHSIDE RD P.O.BOX 5667
ST JOHNS
Newfoundland and Labrador
A1C5X1
Canada

Instructions: See Herein

Instructions: Voir aux présentes

Vendor/Firm Name and Address
Raison sociale et adresse du fournisseur/de l'entrepreneur

Delivery Required - Livraison exigée See Herein	**Delivery Offered - Livraison proposée**

Vendor/Firm Name and Address
Raison sociale et adresse du fournisseur/de l'entrepreneur

Telephone No. - N° de téléphone
Facsimile No. - N° de télécopieur

Name and title of person authorized to sign on behalf of Vendor/Firm (type or print)
Nom et titre de la personne autorisée à signer au nom du fournisseur/ de l'entrepreneur (taper ou écrire en caractères d'imprimerie)

Signature **Date**

Issuing Office - Bureau de distribution
Ship Refits and Conversions / Radoubss et modifications de navires and / et
11 Laurier St. / 11, rue Laurier
6C2, Place du Portage
Gatineau, Québec K1A 0S5

Canada

THIS PAGE HAS BEEN LEFT INTENTIONALLY BLANK

TABLE OF CONTENTS

PART 7 - RESULTING CONTRACT CLAUSES

List of Annexes:

PART 1 - GENERAL INFORMATION

1.1 Introduction

The bid solicitation is divided into seven parts plus attachments and annexes, as follows:

Part 1 General Information: provides a general description of the requirement;

Part 2 Bidder Instructions: provides the instructions, clauses and conditions applicable to the bid solicitation and states that the Bidder agrees to be bound by the clauses and conditions contained in all parts of the bid solicitation;

Part 3 Bid Preparation Instructions: provides bidders with instructions on how to prepare their bid;

Part 4 Evaluation Procedures and Basis of Selection: indicates how the evaluation will be conducted, the evaluation criteria that must be addressed in the bid, if applicable, and the basis of selection;

Part 5 Certifications: includes the certifications to be provided;

Part 6 Financial and Other Requirements: includes specific requirements that must be addressed by bidders; and

Part 7 Resulting Contract Clauses: includes the clauses and conditions that will apply to any resulting contract.

The Annexes include the Technical Specification, the Basis of Payment, the Federal Contractors Program for Employment Equity - Certification, the Insurance Requirements and other Annexes.

1.2 Summary

1.2.1 The Requirement is:

1.2.2 To carry out the docking, maintenance and alterations of the Canadian Coast Guard Vessel CCGS Henry Larsen in accordance with the associated Technical Specifications detailed in Annex “A”.

1.2.3 To carry out Unscheduled Work authorized by the Contracting Authority.

1.2.4 As per the Integrity Provisions under section 01 of Standard Instructions 2003 bidders must provide a list of all Owners and/or Directors and other associated information as required. Refer to section 4.21 of the Supply Manual for additional information on the Integrity Provisions.

1.2.5 The requirement is exempt from the provisions of the World Trade Organization Agreement on Government Procurement (WTO-AGP), Annex 4 and the North American Free Trade Agreement (NAFTA), Chapter Ten Annex 1001.2b Paragraph 1(a). However, it is subject to the Agreement on Internal Trade (AIT). The sourcing strategy relating to this procurement will be limited to suppliers in Eastern Canada, in accordance with Shipbuilding, Refit, Repair and Modernization Policy (1996-12-19).

1.2.6 The Federal Contractors Program (FCP) for employment equity applies to this procurement; see Part 5 - Certifications, Part 7 - Resulting Contract Clauses and the annex titled Federal Contractors Program for Employment Equity - Certification.

1.3 Debriefings

Bidders may request a debriefing on the results of the bid solicitation process. Bidders should make the request to the Contracting Authority within 15 Working Days of receipt of the results of the bid solicitation process. The debriefing may be in writing, by telephone or in person.

PART 2 - BIDDER INSTRUCTIONS

2.1 Standard Instructions, Clauses and Conditions

All instructions, clauses and conditions identified in the bid solicitation by number, date and title are set out in the Standard Acquisition Clauses and Conditions **(https://buyandsell.gc.ca/policy-and-guidelines/standard-acquisition-clauses-and-conditions-manual)** Manual issued by Public Works and Government Services Canada.

Bidders who submit a bid agree to be bound by the instructions, clauses and conditions of the bid solicitation and accept the clauses and conditions of the resulting contract.

The 2003 (2014-09-25) Standard Instructions - Goods or Services - Competitive Requirements, are incorporated by reference into and form part of the bid solicitation.

2.2 Submission of Bids

Bids must be submitted only to Public Works and Government Services Canada (PWGSC) Bid Receiving Unit by the date, time and place indicated on page 1 of the bid solicitation.

2.3 Enquiries - Bid Solicitation

All enquiries must be submitted in writing to the Contracting Authority no later than **five** (**5) Working Days** before the bid closing date. Enquiries received after that time may not be answered.

Bidders should reference as accurately as possible the numbered item of the bid solicitation to which the enquiry relates. Care should be taken by bidders to explain each question in sufficient detail in order to enable Canada to provide an accurate answer. Technical enquiries that are of a "proprietary " nature must be clearly marked "proprietary" at each relevant item. Items identified as proprietary will be treated as such except where Canada determines that the enquiry is not of a proprietary nature. Canada may edit the questions or may request that the Bidder do so, so that the proprietary nature of the question is eliminated, and the enquiry can be answered with copies to all bidders. Enquiries not submitted in a form that can be distributed to all bidders may not be answered by Canada.

Any clarifications or changes to the bid solicitation resulting from the questions and answers will be included as an amendment to the bid solicitation.

2.4 Applicable Laws

Any resulting contract must be interpreted and governed, and the relations between the parties determined, by the laws in force in _____.

Bidders may, at their discretion, substitute the applicable laws of a Canadian province or territory of their choice without affecting the validity of their bid, by deleting the name of the Canadian province or territory specified and inserting the name of the Canadian province or territory of their choice. If no change is made, it acknowledges that the applicable laws specified are acceptable to the bidders.

Refer to Annex "J1" for Deliverables/Certifications.

2.5 Bidders' Conference

A bidders' conference chaired by the Contracting Authority will be held at St. John's NL on **May 8, 2015 @ 1000**. The scope of the requirement outlined in the bid solicitation will be reviewed during the conference and questions will be answered. It is recommended that bidders who intend to submit a bid attend or send representative.

Bidders are requested to communicate with the Contracting Authority before the conference to confirm attendance. Bidders should provide, in writing, to the Contracting Authority, the names of the person(s) who will be attending and a list of issues they wish to table at least **three (3) Working Days** before the scheduled conference.

Any clarifications or changes to the bid solicitation resulting from the bidder's conference will be included as an amendment to the bid solicitation. Bidders who do not attend will not be precluded from submitting a bid.

2.6 Optional Site Visit – Vessel

It is recommended that the Bidder or a representative of the Bidder visit the work site. Arrangements have been made for a tour of the work site. The site visit will be held on May 6 2015 and May 7 2015 @ 0900 at the Canadian Coast Guard Base in St. John's NL. Bidders must communicate with the Contracting Authority no later than three (3) Working Days before the scheduled visit to confirm attendance and provide the name(s) of the person(s) who will attend. Bidders who do not confirm attendance and provide the name(s) of the person(s) who will attend as required will not be allowed access to the site. Bidders will be requested to sign an attendance form. Bidders who do not attend or send a representative will not be given an alternative appointment but they will not be precluded from submitting a bid. Any clarifications or changes to the bid solicitation resulting from the site visit will be included as an amendment to the bid solicitation.

2.7 Work Period - Marine

Work must commence and be completed as follows:

Commence: July 2, 2015
Complete: May 20, 2016

By submitting a bid, the Bidder certifies that they have sufficient materiel and human resources allocated or available and that the above work period is adequate to both complete the known work and absorb a reasonable amount of unscheduled work.

2.7.1 Additional Instructions to Work Period

From refit start date of July 2, 2015 to May 20, 2016 the vessel will be unmanned during the work period and will be considered to be out of commission. The vessel during that period will be in the care and custody of the Contractor and under its control.

The vessel will have to be made completely habitable for the ships crew by May 9, 2016.

PART 3 - BID - PREPARATION INSTRUCTIONS

3.1 Bid Preparation Instructions

(a) Copies of Bid: Canada requests that Bidders provide their bid in separately bound sections as follows:

Section I - Technical Bid (1 hard copy and 1 soft copy on DVD)
Section II - Financial Bid (1 hard copy and 1 soft copy on DVD)
Section III - Certifications (1 hard copy and 1 soft copy on DVD))

If there is a discrepancy between the wording of the soft copy and the hard copy, the wording of the hard copy will have priority over the wording of the soft copy.

Prices must appear in the financial bid only. No prices must be indicated in any other section of the bid.

(b) Format of Bid:Canada requests that bidders follow the format instructions described below in the preparation of their bid:

(i) use 8.5 x 11 inch (216 mm x 279 mm) paper;
(ii) use a numbering system that corresponds to the bid solicitation;

(c) Canada's Policy on Green Procurement: In April 2006, Canada issued a policy directing federal departments and agencies to take the necessary steps to incorporate environmental considerations into the procurement process Policy on Green Procurement (http://www.tpsgc-pwgsc.gc.ca/ecologisation-greening/achats-procurement/
politique-policy-eng.html). To assist Canada in reaching its objectives, bidders are encouraged to :

1) use 8.5 x 11 inch (216 mm x 279 mm) paper containing fibre certified as originating from a sustainably-managed forest and/or containing minimum 30% recycled content; and

2) use an environmentally-preferable format including black and white printing instead of colour printing, printing double sided/duplex, using staples or clips instead of cerlox, duotangs or binders.

Section I: Technical Bid

The Bidder must provide all of the deliverables as referenced in Annex "J1" Deliverables and Certifications.

Section II: Financial Bid

Bidders must submit their financial bid in accordance with the instructions in this solicitation and the Financial Bid Presentation Sheet in Annex "H", including its Pricing Data Sheets, Appendix 1 to Annex "H", and the Cumulative Pricing Sheet for Evaluation, Appendix 2 to Annex "H" . The total amount of Applicable Taxes must be shown separately.

Section III: Certifications

Bidders must submit the certifications required under Part 5.

3.1.1 Unscheduled Work and Evaluation Price

In any vessel refit, repair or docking contract, unscheduled work will arise after the vessel and its equipment is opened up and surveyed.

An anticipated cost for the unscheduled work will be included in the evaluation price. The evaluation price will be calculated by including an estimated amount of additional person-hours multiplied by a firm hourly charge-out labour rate for unscheduled work and will be added to the firm price for the known work.

The Evaluation Price will be used for evaluating the bid. The additional amount of person-hours for unscheduled work will be based on historical experience and there is no minimum or maximum amount of unscheduled work nor is there a guarantee of such unscheduled work.

PART 4 - EVALUATION PROCEDURES AND BASIS OF SELECTION

4.1 Evaluation Procedures

(a) Bids will be assessed in accordance with the entire requirement of the bid solicitation including the technical and financial evaluation criteria.

(b) An evaluation team composed of representatives of Canada will evaluate the bids.

Section I - Technical Bid / Certifications

Each bid will be reviewed to determine whether it meets the mandatory requirements of the bid solicitation. Any element of the bid solicitation identified with the words “must” or "mandatory” is a mandatory requirement. Bids that do not comply with each and every manadatory requirement will be declared non-responsive and disqualified. The mandatory requirements are as follows:

(a) Mandatory deliverables that must be submitted with the Bidder's bid to be deemed responsive are summarized in Annex "J1";
(b) Bidders must submit an Annex H, Appendix 2 Cumulative Pricing Sheet for Evaluation completed in accordance with the procedures specified below; and
(c) The costs identified in Article B5 above must be bid in Annex H, Appendix 2 Cumulative Pricing Sheet for Evaluation.

Procedures for Completing Annex H, Appendix 2:

(1) For an item in the CUMULATIVE PRICING SHEET FOR EVALUATION table for which they wish to bid a price, Bidders must enter their proposed Total Firm Price and Cumulative Price for the item. Ten points are assigned to each item on which a bidder has bid.
(2) Appendix 2 represents the CCG’s prioritization of Work to be completed within the budget available, from the highest priority at item 1 to the lowest priority at the last item. Bidders must bid on each item in the table sequentially, that is by leaving no unbid items at items numbered higher in the table. Skipping an entry of Total Firm Price and Cumulative Price for an item in the sequence will result in the bid being declared non-responsive and disqualified.
(3) A Bidder is requested to insert “$0.00” for any item for which it does not intend to charge or for an item that is included in other prices provided in the table. Excepting for remaining cell items as identified in 5 below, if the bidder leaves any prick blank, or inserts wording other than a price, Canada will treat the price as “$0.00” for evaluation purposes and may request that a Bidder confirm that the price is, in fact, “$0.00”. No Bidder will be permitted to add or change a price as part of this confirmation. Any bidder who does not confirm that the price for a blank or worded item is “$0.00” will be declared non-responsive.
(4) Bidders are to sequentially enter their bids in the CUMULATIVE PRICING DATA SHEET,respecting the order of entries, and continue entering their pricing and cumulative pricing for each spec item. Bidders continue entering their pricing/cumulative pricing on the spec items with the intention of getting their bid as close to $17,000,000 (without exceeding), and no less than $16,100,000. If the bidder bids a firm Price on all 82 Work Items with a maximum total of 820 points, a total Firm Price less than $ 16,100,000 will be accepted.
(5) The bidding procedure may result in a list of items bid that is shorter than the list of items identified within the Appendix. Once a bidder has entered their pricing sequentially, the totality of items for which they wish to bid has been reached, and their their bid is as within the permitted financial range as stated in (4) above, a bidder must stop entering pricing in Appendix 2. This may result in the lowest numbered items being left blank. In this circumstance only,

the remaining blank cells will not be interpreted as a bid to do the work for "$0.00" but will identify Work that will not be included in the resulting Contract.

(6) Bidders are reminded that the resulting Contract will not permit work not included in the Contractor's bid to be performed during the Contract if it arises, including contracting for it as Unscheduled Work.

(7) At the point where the bidder stops bidding, the cumulative bid price (not exceeding $17,000,000.00) is to be entered into Annex H1 - Price for Evaluation, Item A Known Work, and the cumulative points associated with the spec item where the bidding stops is to be entered into Annex H1 - Price for Evaluation, Item F CUMULATIVE POINTS.

Procedures for Completing Annex H, Appendix 1:

Annex H Appendix 1 is information that will form part of Annex B of the resulting Contract. Bidders are requested to enter into Appendix 1 the same data that was entered into Appendix 2. This information should be completed and submitted with the bid, but may be submitted afterwards. If it is not completed and submitted as requested, the Contracting Authority will so inform the Bidder and provide the Bidder with a time frame within which to meet the requirement. Failure to comply with the request of the Contracting Authority and meet the requirement within that time period will render the bid non-responsive.

In the event of any conflict between the contents of the two Appendices, Annex 2 prevails.

Evaluation Procedures for Equivalent Products :

Evaluation Procedures for Equivalent Products - Excepting Annex A Specification 19 Products :

(a) This bid solicitation includes requirements to propose equipment that has been specified by brand name, model and/or part number in order to ensure compatibility, interoperability and interchangeability with existing equipment owned by Canada. With the exception of those products described or listed in Annex A, Specification 19, the following procedures apply.

(b) Products that are equivalent in form, fit, function and quality that are fully compatible, interchangeable, and interoperable with the existing equipment owned by Canada will be considered where the Bidder:

(i) clearly designates in its bid the brand name, model and/or part number of the proposed equivalent product;

(ii) demonstrates that the proposed equivalent is fully compatible, interoperates with and is interchangeable with the item(s) specified in this bid solicitation;

(iii) provides complete specifications and descriptive technical documentation for each equivalent item proposed;

(iv) substantiates the compliance of its proposed equivalent by demonstrating that it meets all mandatory performance criteria that are specified in this bid solicitation; and

(v) clearly identifies those areas in the specifications and descriptive technical documentation that demonstrate the equivalence of the proposed equivalent product.

(c) If requested during evaluation, the Bidder must submit a sample of any proposed equivalent product to the Contracting Authority for testing.

(d) If requested during evaluation, the Bidder must provide a demonstration of its proposed equivalent product.

(e) Proposed equivalent products will be declared non-responsive if:

(i) the bid fails to provide all the information required to allow the Contracting Authority to evaluate the equivalency of the proposed equivalent, including additional information requested by the Contracting Authority during the evaluation to supplement the information submitted in the bid (Note: it is the responsibility of the Bidder to include all information required to evaluate equivalency as described above; however, all bidders acknowledge that Canada will have the right, but not the obligation, to request any additional information during the evaluation that it requires to make a determination regarding equivalency);

(ii) the Contracting Authority determines that the proposed equivalent fails to meet or exceed the mandatory requirements specified in this bid solicitation; or

(iii) the Contracting Authority determines that the proposed equivalent is not equivalent in form, fit, function or quality to the item(s) specified in this bid solicitation or that the proposed equivalent is not fully compatible, interoperable and interchangeable with the existing equipment owned by Canada.

.

Section II - Financial Bid

In order to be compliant, the Bidder's bid must, to the satisfaction of Canada, meet all requirements and provide all information required under Part 3, Section II - Financial Bid.

Canada reserves the right to request information to support any bid requirement. The Bidder is instructed to address each requirement in sufficient depth to permit a complete analysis and assessment by the Evaluation Team. The Bid will be deemed responsive if it is found to meet all the mandatory requirements.

4.1.1 Evaluation of Price

The price of the bid will be evaluated in Canadian Dollars, Applicable Taxes excluded, FOB destination, Canadian customs duties and excise taxes included

4.2 Basis of Selection

A bid must comply with the requirements of the bid solicitation and meet all mandatory technical evaluation criteria to be declared responsive. The responsive bid with the lowest evaluated price per point as per the formula included in **H1 Price for Evaluation** , Annex H will be recommended for award of a contract.
Bidders should note that all contract awards are subject to Canada's internal approvals process, which includes a requirement to approve funding in the amount of any proposed Contract. Notwithstanding that a Bidder may have been recommended for award of Contract, issuance of any Contract will be contingent upon internal approval in accordance with Canada's policies. If such approval is not given, no Contract will be awarded.

4.3. Deliverables after Contract Award

Refer to Annex "J2".

PART 5 - CERTIFICATIONS

Bidders must provide the required certifications and associated information to be awarded a contract.

The certifications provided by bidders to Canada are subject to verification by Canada at all times. Canada will declare a bid non-responsive, or will declare a contractor in default in carrying out any of its obligations under the Contract, if any certification made by the Bidder is found to be untrue whether made knowingly or unknowingly, during the bid evaluation period or during the contract period.

The Contracting Authority will have the right to ask for additional information to verify the Bidder's certifications. Failure to comply and to cooperate with any request or requirement imposed by the Contracting Authority may render the bid non-responsive or constitute a default under the Contract.

5.1 Certifications Required Precedent to Contract Award

5.1.1 Integrity Provisions - Associated Information

By submitting a bid, the Bidder certifies that the Bidder and its Affiliates are in compliance with the provisions as stated in Section 01 Integrity Provisions - Bid of Standard Instructions 2003. The associated information required within the Integrity Provisions will assist Canada in confirming that the certifications are true.

5.1.2 Federal Contractors Program for Employment Equity - Bid Certification

By submitting a bid, the Bidder certifies that the Bidder, and any of the Bidder's members if the Bidder is a Joint Venture, is not named on the Federal Contractors Program (FCP) for employment equity "FCP Limited Eligibility to Bid" list (http://www.labour.gc.ca/eng/standards_equity/eq/emp/fcp/list/inelig.shtml) available from Employment and Social Development Canada (ESDC) - Labour's website.

Canada will have the right to declare a bid non-responsive if the Bidder, or any member of the Bidder if the Bidder is a Joint Venture, appears on the "FCP Limited Eligibility to Bid " list at the time of contract award.

Canada will also have the right to terminate the Contract for default if a Contractor, or any member of the Contractor if the Contractor is a Joint Venture, appears on the "FCP Limited Eligibility to Bid" list during the period of the Contract.

The Bidder must provide the Contracting Authority with a completed Annex C , before contract award. If the Bidder is a Joint Venture, the Bidder must provide the Contracting Authority with a completed annex Federal Contractors Program for Employment Equity - Certification, for each member of the Joint Venture.

5.1.3 Education and Experience

The Bidder certifies that all the information provided in the résumés and supporting material submitted with its bid, particularly the information pertaining to education, achievements, experience and work history, has been verified by the Bidder to be true and accurate. Furthermore, the Bidder warrants that every individual proposed by the Bidder for the requirement is capable of performing the Work described in the resulting contract.

Refer to Annex "J1" for Deliverables/Certifications

5.1.4 Status and Availability of Resources

The Bidder certifies that, should it be awarded a contract as a result of the bid solicitation, every individual proposed in its bid will be available to perform the Work as required by Canada's representatives and at the time specified in the bid solicitation or agreed to with Canada's representatives. If for reasons beyond its control, the Bidder is unable to provide the services of an individual named in its bid, the Bidder may propose a substitute with similar qualifications and experience. The Bidder must advise the Contracting Authority of the reason for the substitution and provide the name, qualifications and experience of the proposed replacement. For the purposes of this clause, only the following reasons will be considered as beyond the control of the Bidder: death, sickness, maternity and parental leave, retirement, resignation, dismissal for cause or termination of an agreement for default.

If the Bidder has proposed any individual who is not an employee of the Bidder, the Bidder certifies that it has the permission from that individual to propose his/her services in relation to the Work to be performed and to submit his/her résumé to Canada. The Bidder must, upon request from the Contracting Authority, provide a written confirmation, signed by the individual, of the permission given to the Bidder and of his/her availability. Failure to comply with the request may result in the bid being declared non-responsive.

Refer to Annex "J1" for Deliverables/Certifications

PART 6 - FINANCIAL AND OTHER REQUIREMENTS

6.1 Financial Capability

6.1.1.Financial Capability Requirement:

The Bidder must have the financial capability to fulfill this requirement. To determine the Bidder's financial capability, the Contracting Authority may, by written notice to the Bidder, require the submission of some or all of the financial information detailed below during the evaluation of bids. The Bidder must provide the following information to the Contracting Authority within fifteen (15) Working Days of the request or as specified by the Contracting Authority in the notice:

a. Audited financial statements, if available, or the unaudited financial statements (prepared by the Bidder's outside accounting firm, if available, or prepared in-house if no external statements have been prepared) for the Bidder's last three fiscal years, or for the years that the Bidder has been in business if this is less than three years (including, as a minimum, the Balance Sheet, the Statement of Retained Earnings, the Income Statement and any notes to the statements).

b. If the date of the financial statements in (a) above is more than five months before the date of the request for information by the Contracting Authority, the Bidder must also provide, unless this is prohibited by legislation for public companies, the last quarterly financial statements (consisting of a Balance Sheet and a year-to-date Income Statement), as of two months before the date on which the Contracting Authority requests this information.

c. If the Bidder has not been in business for at least one full fiscal year, the following must be provided:
   i.the opening Balance Sheet on commencement of business (in the case of a corporation, the date of incorporation); and
   ii.the last quarterly financial statements (consisting of a Balance Sheet and a year-to-date Income Statement) as of two months before the date on which the Contracting Authority requests this information.

d. A certification from the Chief Financial Officer or an authorized signing officer of the Bidder that the financial information provided is complete and accurate.

e. A confirmation letter from all of the financial institution(s) that have provided short-term financing to the Bidder outlining the total of lines of credit granted to the Bidder and the amount of credit that remains available and not drawn upon as of one month prior to the date on which the Contracting Authority requests this information.

f. A detailed monthly Cash Flow Statement covering all the Bidder's activities (including the requirement) for the first two years of the requirement that is the subject of the bid solicitation, unless this is prohibited by legislation. This statement must detail the Bidder's major sources and amounts of cash and the major items of cash expenditures on a monthly basis, for all the Bidder's activities. All assumptions made should be explained as well as details of how cash shortfalls will be financed.

g. A detailed monthly Project Cash Flow Statement covering the first two years of the requirement that is the subject of the bid solicitation, unless this is prohibited by legislation. This statement must detail the Bidder's major sources and amounts of cash and the major items of cash expenditures, for the requirement, on a monthly basis. All assumptions made should be explained as well as details of how cash shortfalls will be financed.

6.1.2. If the Bidder is a joint venture, the financial information required by the Contracting Authority must be provided by each member of the joint venture.

6.1.3. If the Bidder is a subsidiary of another company, then any financial information in 1. (a) to (f) above required by the Contracting Authority must be provided by the ultimate parent company. Provision of parent company financial information does not by itself satisfy the requirement for the provision of the financial information of the Bidder, and the financial capability of a parent cannot be substituted for the financial capability of the Bidder itself unless an agreement by the parent company to sign a Parental Guarantee, as drawn up by Public Works and Government Services Canada (PWGSC), is provided with the required information.

6.1.4. Financial Information Already Provided to PWGSC:

The Bidder is not required to resubmit any financial information requested by the Contracting Authority that is already on file at PWGSC with the Contract Cost Analysis, Audit and Policy Directorate of the Policy, Risk, Integrity and Strategic Management Sector, provided that within the above-noted time frame:

a. the Bidder identifies to the Contracting Authority in writing the specific information that is on file and the requirement for which this information was provided; and

b. the Bidder authorizes the use of the information for this requirement.
It is the Bidder's responsibility to confirm with the Contracting Authority that this information is still on file with PWGSC.

6.1.5. Other Information:

Canada reserves the right to request from the Bidder any other information that Canada requires to conduct a complete financial capability assessment of the Bidder.

6.1.6.Confidentiality:

If the Bidder provides the information required above to Canada in confidence while indicating that the disclosed information is confidential, then Canada will treat the information in a confidential manner as permitted by the Access to Information Act, R.S., 1985, c. A-1, Section 20(1) (b) and (c).

6.1.7. Security:

In determining the Bidder's financial capability to fulfill this requirement, Canada may consider any security the Bidder is capable of providing, at the Bidder's sole expense (for example, an irrevocable letter of credit from a registered financial institution drawn in favour of Canada, a performance guarantee from a third party or some other form of security, as determined by Canada).

6.2 Contract Financial Security

6.2.1 In the bid, the Bidder must indicate the following in Annex H "Financial Bid Presentation Sheet":

a) the type of Contract Financial Security the Bidder intends to provide if awarded the Contract; and

b) the cost to the Bidder of the Contract Financial Security.

Refer to Annex "J1" for Deliverables/Certifications

6.2.2 If this bid is accepted, the Bidder shall be required to provide the Contract Financial Security in accordance with 7.12 within **(5) five Working Days** after the date of contract award.

6.2.3 If, for any reason, Canada does not receive, within the specified period, the required Contract Financial Security , Canada may accept another offer, seek new bids, negotiate a contract or not accept any bids, as Canada may deem advisable.

6.3 Vessel Transfer Costs

Vessel Transfer Costs will apply to the evaluation price of this solicitation.

1. The evaluation price must include the cost for transferring the vessel from its home port to the shipyard/ship repair facility where the Work will be performed and the cost of transferring the vessel to its home port following completion of the Work, in accordance with the following:

(a) The Bidder must provide the location of the shipyard/ship repair facility where it proposes to perform the Work together with the applicable vessel transfer cost from the list provided under paragraph 2 of this clause shall be entered into Table H1 (D):

(b) If the list in paragraph 2 of this clause does not provide the shipyard/ship repair location where the Bidder intends to perform the Work, then the Bidder must advise the Contracting Authority, in writing, at least **10 calendar days** before the bid closing date, of its proposed location for performing the Work. The Contracting Authority will confirm to the Bidder, in writing, at least **5 calendar days** before the bid closing date, the location of the shipyard/ship repair and the applicable vessel transfer cost.

A bid that specifies a location for executing the Work which is not on the list of paragraph 2 of this clause, and for which a notification in writing has not been received by the Contracting Authority as required above, will be considered non-responsive.

2. List of shipyard/ship repair facilities and applicable vessel transfer costs

Vessel: CCGS Henry Larsen
Home port: St. John's, NL

Transfer costs in the case of vessels transferred using a government delivery crew include the fuel cost at the vessel's most economical speed of transit and for unmanned refits only, crew transportation costs for the delivery crew based on the location of the vessel's home port and the shipyard/ship repair facility. Crew transportation costs do not include any members of the delivery crew who remain at the shipyard/ship repair facility in order to discharge project responsibilities related to the vessel being transferred.

Transfer costs in the case of vessels transferred unmanned by either commercial towing, railway, highway or other suitable means of transportation must be:

(i) included as part of the Bidder's financial bid in the case where the Bidder is responsible for the transfer; or

(ii) identified as the applicable vessel transfer cost, as given in the list below, in the case when Canada is responsible for the transfer.

Shipyard/ship repair facility **Applicable vessel transfer cost**

Company	City	Transfer Cost Manned
Group Verreault Navigation Inc.	Les Méchins, Québec	
Davie	Lévis, Québec	
New Dock St John's Dockyard Limited	St. John's, Newfoundland	
Irving Shipbuilding Inc.,	Halifax, Nova Scotia	
Pictou Shipyard	Pictou, Nova Scotia	
Heddle Marine Service Inc.	Hamilton, Ontario	

Proposed Drydocking Location : _____

Refer to Annex "J1" for Deliverables/Certifications.

6.4 Docking Facility

Before contract award, the successful Bidder may be required to demonstrate to the satisfaction of Canada that the certified capacity of the docking facility, including any means or conveyance to remove the vessel from the water, is adequate for the anticipated loading in accordance with the related dry docking plans and other documents detailed in the Contract. The successful Bidder will be notified in writing and will be allowed a reasonable period of time to provide detailed keel block load distribution sketches and blocking stability considerations, along with the supporting calculations to show the adequacy of the proposed docking arrangement.

At the time of bid closing the Bidder must provide current and valid certification of the capacity and condition of the docking facility to be used for the Work. The certification must be provided by a recognized consultant or classification society and must have been issued within the past two years.

Although a dry docking facility may have a total capacity greater than the vessel to be docked, the weight distribution of the vessel may cause individual block loading to be exceeded. Also, while the physical dimensions of a dry docking facility may indicate acceptability for docking of a specific vessel, other limitations such as spacing of rails on a marine railway, concrete piers of abutments adjoining the dry dock may, preclude the facility from being considered as a possible dry docking site and render the bid non-responsive.

Refer to Annex "J1" for Deliverables/Certifications

6.5 Workers' Compensation - Letter of Good Standing

The Bidder must have an account in good standing with the applicable provincial or territorial Workers' Compensation Board.

The bidder must provide with the bid, a certificate or letter from the applicable Worker's Compensation Board confirming the Bidder's good standing account. Failure to comply with the request may result in the bid being declared non-responsive.

Refer to Annex "J1" for Deliverables/Certifications.

6.6 Valid Labour Agreement

If the Bidder has a labour agreement, or other suitable instrument, in place with all its unionized labour, it must be valid for the proposed period of any resulting contract. Documentary evidence of the agreement or suitable instrument must be provided on or before bid closing date. If this information is not provided with the bid it will render the bid non-responsive.

Refer to Annex "J1" for Deliverables/Certifications

6.7 Preliminary Work Schedule

6.7.1 At the time of bid closing the Bidder must submit to Canada one (1) copy of a preliminary work schedule In Gantt chart format. This schedule must highlight the target dates listed at 6.7.2 below and all priced work items listed in Annex H . For purposes of the schedule the Contractor will assume Vessel Docking on July 2, 2015.

6.7.2. The Contractor's schedule must include target dates for each of the following significant events:
a. Commencement of Work as defined at Article 7.3.1
b. Period to be in Dry-Dock
c. All priced work items listed in Annex H Appendix 2
d. FSR Scheduling for Priced Work Items
e. Completion of Work as defined at Article 7.3.1
f. Dock and *Sea* Trials Period
g. Resumption of custody by Canada

Refer to Annex "J1", Deliverables/Certifications.

6.8 Safety Measures for Fueling and Disembarking Fuel

Fueling and disembarking fuel from Canadian government vessels must be conducted under the supervision of a responsible supervisor trained and experienced in these operations.
At bid closing date, the Bidder must provide details of its safety measures for fueling and disembarking fuel together with the name and qualifications of the person in charge of this activity. If this information is not provided with the bid it will render the bid non-responsive.

Refer to Annex "J1", Deliverables/Certifications.

6.9 ISO 9001:2008 - Quality Management Systems

The Bidder shall have in place a Quality Management System registered to ISO 9001:2008 or a Quality Management System modeled on ISO 9001-2008 and shall provide at time of bid closing:

- If registered its valid ISO 9001-2008 certification;
- Example of Quality Control Plan (QCP) as per clause 6.17.

Documentation and procedures of bidders may be subject to a Quality System Evaluation (QSE) by the Technical Authority during bid evaluation period.

Refer to Annex "J1" for Deliverables/Certifications.

6.10 Health and Safety

The Bidder must certify with its bid that it has a documented Health and Safety system fully compliant with all current Federal, Provincial and Municipal regulations. If this information is not provided with the bid it will render the bid non-responsive.

Refer to Annex "J1" for Deliverable Requirements.

6.11 Fire Protection, Fire Fighting and Training Procedures

The Bidder must submit with its bid objective evidence that it has documented fire protection, fire fighting and training procedures compliant with current regulations and their insurance requirements. The fire protection, fire fighting and training procedures will, once accepted by Canada, form part of the Contract. Please refer to clause 7.25. If this information is not provided with the bid it will render the bid non-responsive.

Refer to Annex "J1" for Deliverable Requirements.

6.12 Hazardous Waste

1. The Bidder acknowledges that sufficient information has been provided by Canada with respect to the location and estimated amount of hazardous materials such as asbestos, lead PCBs, silica or other hazardous materials or toxic substances.

2. The price includes all costs associated with the removal, handling, storage, disposal and/or working in the vicinity of hazardous materials such as asbestos, lead, PCBs, silica and other hazardous materials or toxic substances on board the vessel, including those costs resulting from the need to comply with applicable laws and regulations in relation to the removal, handling, disposal or storage of hazardous materials or toxic substances.

3. The completion date for the Work takes into account the fact that the removal, handling, storage, disposal and/or working in the vicinity of hazardous materials such as asbestos, lead, PCBs, silica and other hazardous materials or toxic substances may be affected by the need to comply with applicable federal, provincial and municipal laws or regulations and that this will not be considered to be an excusable delay.

6.13 Insurance Requirements

The Bidder must provide with its bid a letter from an insurance broker or an insurance company licensed to operate in Canada stating that the Bidder, if awarded a contract as a result of the bid solicitation, can be insured in accordance with the Insurance Requirements specified in Annex "D". If this information is not provided with the bid it will render the bid non-responsive.

Refer to Annex "J1", Deliverables/Certifications.

6.14 Welding Certification

1. Welding must be performed by a welder certified by the Canadian Welding Bureau and in accordance with the requirements of the following Canadian Standards Association (CSA) standards:

(a) CSA W47.1-03, Certification for Companies for Fusion Welding of Steel (Minimum Division Level 2.1); and

(b) CSA W47.2-M1987 (R2003), Certification for Companies for Fusion Welding of Aluminum (Minimum Division Level 2.1).

The bidder must submit proof of certification with the bid that it meets the requirements of CSA W47.1-03, Certification for Companies for Fusion Welding of Steel (Minimum Division Level 2.1).

The certification shall remain valid for the duration of the contract. If the proof of certification for CSA W47.1-03, Certification for Companies for Fusion Welding of Steel (Minimum Division Level 2.1) is not provided with the bid it will render the bid non-responsive.

Refer to Annex " J1" for Deliverables/Certifications.

6.15 Project Management Services

The Bidder is required to provide a Project Management Team experienced and capable of successfully managing the ship refit contract as defined herein. Project management personnel, services and deliverables must comply with the requirements detailed in the contract.

1. Intent

(a) Job titles used in this annex are for clarity within this document only. The Contractor is free to choose job titles that suit its organization.

(b) The Contractor, through its Project Management Team, is responsible to discharge the duties and supply the deliverables required in the Contract and the Specifications.

2. Project Manager

(a) The Contractor must supply an experienced Project Manager (PM).
(b) The PM must have at least two years experience within the last five years in managing a marine project.

3. Project Management Team

Other than the Project Manager, the Contractor may assign and deploy personnel to suit its organization; provided however that the collective resume of its Project Management Team provide for the effective control of the project elements including but not limited to:

i. Engineering
ii. Manufacturing
iii. Quality Assurance
iv. Planning and Scheduling
v. Test and Trials
vi. Purchasing

4. Tender Deliverable
Names, brief resumes, and list of duties for each of the team members that ensures that each of the project elements listed in Article 2 and 3i through 3 vi. inclusive have been addressed.

Refer to Annex "J1" for Deliverables/Certifications.
6.16 List of Proposed Subcontractors

If the bid includes the use of subcontractors, the Bidder must provide a list of all subcontractors including a description of the things to be purchased, a description of the work to be performed by specification section and the location of the performance of that work. The list should not include the purchase of off-the-shelf items, software and such standard articles and materials as are ordinarily produced by manufacturers in the normal course of business, or the provision of such incidental services as might ordinarily be subcontracted in performing the Work, i.e. subcontract work valued at less than $ 5,000.00 aggregate for the project.

Refer to Annex "J1" for Deliverables/Certifications.

6.17 Quality Control Plan

At the time of bid closing the Bidder must submit to Canada an example of its Quality Control Plan (QCP) as applied on previous projects of the same nature.

Refer to Annex "J1" for Deliverables/Certifications.

6.18 Inspection and Test Plan

At the time of bid closing the Bidder must submit to Canada an example of an Inspection and Test Plan (ITP) complete with requirement and inspection reports as developed on previous projects of the same nature.

Refer to Annex "J1" for Deliverables/Certifications.

6.19 Environmental Protection

At the time of bid closing the Bidder must submit details of its environmental emergency response plans, waste management procedures and/or formal environmental training undertaken by its employees.

Refer to Annex "J1" for Deliverables/Certifications.

PART 7 - RESULTING CONTRACT CLAUSES

The following clauses and conditions apply to and form part of any contract resulting from the bid solicitation.

7.1 Requirement

The Contractor must:

a) carry out the docking, maintenance and alterations of the Canadian Coast Guard Vessel CCGS Henry Larsen in accordance with the associated Technical Specifications detailed in the Requirement and attached as Annex "A".

b) carry out any unscheduled work authorized by the Contracting Authority.

7.2 Definitions:

In this Contract, unless the context otherwise requires:

‘CCGS’ – means Canadian Coast Guard Ship

‘Design Change’ - means any change to approved drawings, Specifications, or statements of requirements. Work necessary to eliminate " fouling" points or for the correction of errors made by the Contractor is not a "Design Change" within the meaning of this section;

‘DFO’ – means Department of Fisheries and Oceans Canada

Dollar, “Dollars”, or “$” - means the legal tender of Canada;

“Good Marine Quality” - means constructed of materials unaffected by or resilient to moisture, sea spray (salt water and salt air), extremes of temperature, and other hazards of the marine environment, and has been designed and constructed to perform intended function in the marine environment conditions of the Atlantic Ocean and to withstand the dynamic motions and cyclic loads imparted in a marine environment. The item must further be designed and constructed for ease and safety of operation under dynamic conditions, to have an operational life equal or superior to the useful life that can be reasonably expected from such item in similar operating conditions and to require minimum maintenance as a result of such marine operating conditions;

‘Milestone’ - means an event, the completion of which signifies a significant and measurable achievement in the performance of the Work.

‘OEM’ - means original equipment manufacturer;

‘Owner’ - means Her Majesty the Queen in right of Canada as represented by the Minister of Fisheries and Oceans

‘Owners Representative’ – means the Chief Engineer of the Henry Larsen or his/her designate.

‘PWGSC’ – means Public Works and Government Services Canada;

‘Working Day’ – means any day of the year other than a Saturday, Sunday or any statutory holiday in the Province of Newfoundland, Nova Scotia, Ontario, Quebec or in the Public Service of Canada, and any

reference herein to a day or days will mean calendar days unless expressly described as a “Working Day” or “Working Days”

Capitalized terms not otherwise defined in these Articles of Agreement numbered 1 through 49 inclusive and defined in the General Conditions or Supplemental Conditions referred to at Section 7.2 will have meanings given to them in those Annexes.

7.3 Standard Clauses and Conditions

All clauses and conditions identified in the Contract by number, date and title are set out in the Standard Acquisition Clauses and Conditions Manual issued by Public Works and Government Services Canada (PWGSC). The manual is available on the following PWGSC website:
(https://buyandsell.gc.ca/policy-and-guidelines/standard-acquisition-clauses-and-conditions-manual)

7.3.1 General Conditions

2030 (2014-09-25), General Conditions - Higher Complexity - Goods, apply to and form part of the Contract.

2030 (2014-09-25) General Conditions Higher Complexity - Goods are hereby amended as follows:

Section 22 Warranty

1. The Contractor, if requested by Canada, must replace or repair at its own expense any finished work, excluding Government Issue incorporated in the Work, which becomes defective or which fails to conform to contract requirements as a result of faulty or inefficient manufacture, material or workmanship.

2. Despite acceptance of the finished work, and without restricting any other term of the Contract or any condition, warranty or provision imposed by law, the Contractor warrants that the following will be free from all defects and will conform with the requirements of the Contract:

(a) The painting of the underwater portion of the hull for a period of 365 days commencing from the date of undocking, except that the Contractor will only be liable to repair and/or replace to a value to be determined as follows:

Original cost to Canada of the underwater painting work, divided by 365 days and multiplied by the number of days remaining in the warranty period. The resultant sum would represent the "Dollar Credit" due to Canada from the Contractor.

(b) All other painting work for a period of 365 days commencing from the date of acceptance of the Work;

(c) All other items of work for a period of ninety (90) days commencing from the date of acceptance of the Work, except that:

(i) the warranty on the work related to any system or equipment not immediately placed in continuous use or service will be for a period of ninety (90) days from the date of acceptance of the vessel;

(ii) for all outstanding defects, deviations, and work items listed on the Acceptance Document at Delivery, the warranty will be ninety (90) days from the subsequent date of acceptance for each item.

3. The Contractor agrees to pass to Canada, and exercise on behalf of Canada, all warranties on the materials supplied or held by the Contractor which exceed the periods indicated above.

4. Refer to Annex “E” and its Appendix “1” for Warranty Defect Claim Procedures and forms.

1031-2 (2012-07-16), Contract Cost Principles, apply and form part of the Contract.

7.3.2 Supplemental General Conditions

1029 (2010-08-16) Ship Repairs;
4001 (2013-01-28) Hardware Purchase, Lease and Maintenance;
4003 (2010-08-16) Licensed Software;

7.4 Term of Contract

7.4.1 Work Period - Marine

1. Work must commence and be completed as follows:

Commence: July 2, 2015
Complete: May 20, 2016

2. The Contractor agrees that the above time (the "Work Period") provides an adequate period to perform the subject work and absorb a reasonable amount of unscheduled work. The Contractor certifies that they have sufficient material and human resources allocated or available to complete the subject work and a reasonable amount of unscheduled work within the Work Period.

Canada has the right to delay the arrival of the Vessel at the Contractor's facility subject to the following conditions:

a) Canada gives 30 calendar days advance notice of a 15 day maximum delay.

The Contractor may claim no additional cost when arrival of the vessel at the Contractor's facility is delayed up to a maximum of 15 calendar days beyond the commencement date, above. The Completion Date shall be extended by a period equal to the length of the delay.

b) Canada does not provide 30 calendar days advance notice of a delay.

The Completion Date shall be reasonably adjusted to reflect the impact of the delay on the arrival of the Vessel and Canada shall pay only the Daily Services Fee referred to in the Basis of Payment for the period of the delay.

7.4.2 Additional Instructions to Work Period

From refit start date of July 2, 2015 to May 20, 2016 the vessel will be unmanned during the work period and will be considered to be out of commission. The vessel during that period will be in the care and custody of the Contractor and under its control.

7.5 Authorities

7.5.1 Contracting Authority

The Contracting Authority for the Contract is:

Mark Haydock
Department of Public Works and Government Services Canada (PWGSC)
Defence and Major Projects Sector
PWGSC, 6C2 Place du Portage, Phase III
11 Laurier Street,
Gatineau, Quebec, K1A 0S5
Tel: (819) 956-0645
Fax: (819) 956-7725
E-Mail - mark.haydock@pwgsc.gc.ca

The Contracting Authority is responsible for the management of the Contract and any changes to the Contract must be authorized in writing by the Contracting Authority. The Contractor must not perform work in excess of or outside the scope of the Contract based on verbal or written requests or instructions from anybody other than the Contracting Authority.

7.5.2 Technical Authority

The Technical Authority for the Contract is:

D. P. Clarke
Production Manager / directeur de la production
Marine Engineering / génie maritime
Integrated Technical Services / Services techniques
Atlantic Region / Région de l'Atlantique
Fisheries and Oceans Canada / Pêches et Océans Canada
Canadian Coast Guard / Garde côtière canadienne
Phone / Téléphone: (709) 772-4983
Fax: / Télécopieur: (709) 772-3652
Email / C. élec: Dean.Clarke@dfo-mpo.gc.ca

The Technical Authority, is the representative of the department or agency for whom the Work is being carried out under the Contract and is responsible for all matters concerning the technical content of the Work under the Contract. Technical matters may be discussed with the Technical Authority, however the Technical Authority has no authority to authorize changes to the scope of the Work. Changes to the scope of the Work can only be made through a contract amendment issued by the Contracting Authority.

7.5.3 Inspection Authority

The Inspection Authority for the Contract is the Canadian Coast Guard.

Name will be determined at Contract Award

Name: TBD
Telephone:
Cell:
Fax:
E-mail:

The Inspection Authority is the representative of the department or agency for whom the Work is being carried out under the Contract and is responsible for the inspection of the Work and acceptance of the finished work. The Inspection Authority may be represented on-site by a designated inspector and any other Government of Canada Inspector who may from time to time be assigned in support of the designated inspector.

7.6 Payment

7.6.1 Basis of Payment - Firm Price

In consideration of the Contractor satisfactorily completing all of its obligations under the Contract, the Contractor will be paid a firm price indicated in the Basis of Payment Annex " B" for the Known Work. Applicable Taxes are extra, if applicable. Payment for unscheduled work shall be in accordance with Annex "B".

No increase in the total liability of Canada or in the price of the Work resulting from any design changes, modifications or interpretations of the Specifications, will be authorized or paid to the Contractor unless such design changes, modifications or interpretations have been authorized in writing, by the Contracting Authority prior to their incorporation in the Work.

7.6.2 Method of Payment - Progress Payment

1. Canada will make progress payments in accordance with the payment provisions of the Contract, no more than once a month, for cost incurred in the performance of the Work, up to 90 percent of the amount claimed and approved by Canada if:

(a) an accurate and complete claim for payment using form PWGSC-TPSGC 1111 http://www.tpsgc-pwgsc.gc.ca/app-acq/forms/documents/1111.pdf, Claim for Progress Payment, and any other document required by the Contract have been submitted in accordance with the invoicing instructions provided in the Contract;

(b) the amount claimed is in accordance with the basis of payment;

(c) the total amount for all progress payments paid by Canada does not exceed 90 percent of the total amount to be paid under the Contract;

(d) all certificates appearing on form PWGSC-TPSGC 1111 have been signed by the respective authorized representatives.

2. The balance of the amount payable will be paid in accordance with the payment provisions of the Contract upon completion and delivery of all work required under the Contract if the Work has been accepted by Canada and a final claim for the payment is submitted.

3. Progress payments are interim payments only. Canada may conduct a government audit and interim time and cost verifications and reserves the rights to make adjustments to the Contract from time to time during the performance of the Work. Any overpayment resulting from progress payments or otherwise must be refunded promptly to Canada.

7.6.3 Liens - Section 427 of the Bank Act

1. If any lien under section 427 of the Bank Act, S.C.. 1991, c. 46, exists in respect to any materials, parts, work-in-process, or finished work for which the Contractor intends to claim payment, the Contractor agrees to inform the Contracting Authority without delay and agrees, unless instructed otherwise by the Contracting Authority, either:

   a.to cause the bank to remove such lien and to provide the Contracting Authority with written confirmation from the bank; or,

   b.to provide to the Contracting Authority an undertaking from the bank that the bank will not make any claim under section 427 of the Bank Act on materials, parts, work-in-process, or finished work in respect of which payment is made to the Contractor under the Contract.

2. Failure to inform the Contracting Authority of such lien or failure to implement paragraph 1(a) or (b) above will constitute default under the default section of the general conditions and will entitle Canada to terminate the Contract

7.6.4 Limitation of Price

Canada will not pay the Contractor for any design changes, modifications or interpretations of the Work unless they have been approved, in writing, by the Contracting Authority before their incorporation into the Work.

7.6.5 Time Verification

Time charged and the accuracy of the Contractor's time recording system are subject to verification by Canada, before or after payment is made to the Contractor. If verification is done after payment, the Contractor must repay any overpayment, at Canada's request.

7.7 Invoicing Instructions

The Contractor must submit invoices in accordance with the information required in Section 13 of 2030, General Conditions, Higher Complexity, Goods and Article 7.5 Payment and Article 7.6 Invoicing Instructions.

7.7.1 Invoices

1. Invoices are to be made out to:

CCGS ITS Marine Engineering VLE
200 Kent Street-Stn 7N-157
Ottawa, Ontario
K1A 0E6
Attention: Vicki Robson

And

The original invoice to be forwarded for verification to:

Public Works and Government Services Canada
Marine Systems Directorate
Defence and Major Projects Sector
11 Laurier Street, Place du Portage
Phase III, 6C2
Gatineau, Quebec
K1A 0S5
Attention: Mark Haydock

2. Canada will only make payment upon receipt of a satisfactory invoice duly supported by specified release documents and any other documents called for under the Contract.

3. The Contractor shall not submit an invoice prior to the completion and acceptance of the Work or shipment of the items to which it relates.

7.7.2 Invoicing Instructions - Progress Claim

1. The Contractor must submit a claim for payment using form PWGSC-TPSGC 1111 http://www.tpsgc-pwgsc.gc.ca/app-acq/forms/documents/1111.pdf, Claim for Progress Payment.

   Each claim must show:

   (a) all information required on form PWGSC-TPSGC 1111;
   (b) all applicable information detailed under section 13. of the general conditions entitled "Invoice Submission";

2. Applicable Taxes must be calculated on the total amount of the claim before the holdback is applied. At the time the holdback is claimed, there will be no Applicable Taxes payable as it was claimed and payable under the previous claims for progress payments.

3. The Contractor must prepare and certify one original and two (2) copies of the claim on form PWGSC-TPSGC 1111, and forward it to the Contracting Authority identified under the section entitled "Authorities" of the Contract for appropriate certification after inspection and acceptance of the Work takes place.

   The Contracting Authority will then forward the original and two (2) copies of the claim to the Contracting Authority for certification and onward submission to the Payment Office for the remaining certification and payment action.

4. The Contractor must not submit claims until all work identified in the claim is completed.

7.7.3 Warranty Holdback

A warranty holdback of 5% of the total contract price as last amended (Applicabe Taxes excluded) will be applied to the final claim for payment. This holdback will be payable by Canada upon the expiry of the 90 day warranty period(s) applicable to the Work. Applicable Taxes, as appropriate, is to be calculated and paid on the total amount of the claim before the 5% holdback is applied. At the time that the holdback is released, there will be no Applicable Taxes payable, as it was included in previous payments.

7.8 Certifications

7.8.1 Compliance

Compliance with the certifications provided by the Contractor in its bid is a condition of the Contract and subject to verification by Canada during the term of the Contract. If the Contractor does not comply with any certification or it is determined that any certification made by the Contractor in its bid is untrue, whether made knowingly or unknowingly, Canada has the right, pursuant to the default provision of the Contract, to terminate the Contract for default.

7.9 Federal Contractors Program for Employment Equity - Default by the Contractor

The Contractor understands and agrees that, when an Agreement to Implement Employment Equity (AIEE) exists between the Contractor and Employment and Social Development Canada (ESDC)-Labour, the AIEE must remain valid during the entire period of the Contract. If the AIEE becomes invalid, the name of the Contractor will be added to the "FCP Limited Eligibility to Bid" list. The imposition of such a sanction by ESDC will constitute the Contractor in default as per the terms of the Contract.

7.10 Applicable Laws

The Contract must be interpreted and governed, and the relations between the parties determined, by the laws in force in _____.

7.11 Priority of Documents

If there is a discrepancy between the wording of any documents that appear on the list, the wording of the document that first appears on the list has priority over the wording of any document that subsequently appears on the list.

(a) the Articles of Agreement;
(b) the General Conditions 2030, , General Conditions - Higher Complexity - Goods
(c) the Supplemental General Conditions 1029, (2010-08-16), Ship Repairs;
(d) the General Conditions 1031-2, (2008-05-12), Contract Cost Principles;
(e) 4001 (2013-01-28) Hardware Purchase, Lease and Maintenance;
(f) 4003 (2010-08-16) Licensed Software;
(g) Annex “A”, Statement of Work;
(h) Annex “B”, Basis of Payment;
(i) Annex “C”, Federal Contractors Program for Employment Equity - Certification;
(j) Annex “D”, Insurance Requirements;
(k) Annex “E”, Warranty;
(l) Annex “F”, Procedure for Unscheduled Work;
(m) Annex “G”, Quality Control/Inspection;
(n) Annex “H”, Financial Bid Presentation Sheet;
(o) Annex “I”, Vessel Turnover;
(p) Annex “J”, Deliverables/Certifications;

(q) Annex “K”, PWGSC Form 450 Claim For Exchange Rate;
(q) the Contractor's bid dated _____ (insert date of bid), as amended_____ (insert date(s) of amendment(s) if applicable)

7.12 Insurance Requirements

The Contractor must comply with the insurance requirements specified in Annex "D". The Contractor must maintain the required insurance coverage for the duration of the Contract. Compliance with the insurance requirements does not release the Contractor from or reduce its liability under the Contract.

The Contractor is responsible for deciding if additional insurance coverage is necessary to fulfil its obligation under the Contract and to ensure compliance with any applicable law. Any additional insurance coverage is at the Contractor's expense, and for its own benefit and protection.

The Contractor must forward to the Contracting Authority within **ten (10) Working Days** after the date of award of the Contract, a Certificate of Insurance evidencing the insurance coverage and confirming that the insurance policy complying with the requirements is in force. Coverage must be placed with an Insurer licensed to carry out business in Canada. The Contractor must, if requested by the Contracting Authority, forward to Canada a certified true copy of all applicable insurance policies.

7.13 Limitation of Contractor’s Liability for Damages to Canada

1. This section applies despite any other provision of the Contract and replaces the section of the general conditions entitled "Liability". Any reference in this section to damages caused by the Contractor also includes damages caused by its employees, as well as its subcontractors, agents, and representatives, and any of their employees.

2. Whether the claim is based in contract, tort, or another cause of action, the Contractor’s liability for all damages suffered by Canada caused by the Contractor’s performance of or failure to perform the Contract is limited to $10 million per incident or occurrence to an annual aggregate of $20 million for losses or damage caused in any one year of carrying out the Contract, each year starting on the date of coming into force of the Contract or its anniversary. This limitation of the Contractor’s liability does not apply to nor include:

(a) Any infringement of intellectual property rights;

(b) Any breach of warranty obligations;

(c) Any liability of Canada to a third party arising from any act or omission of the Contractor in performing the Contract; or

(d) Any loss for which the policies of insurance specified in the Contract or any other policies of insurance held by the Contractor would provide insurance coverage.

3. Each Party agrees that it is fully liable for any damages that it causes to any third party in connection with the Contract, regardless of whether the third party makes its claim against Canada or the Contractor. If Canada is required, as a result of joint and several liability, to pay a third party in respect of damages caused by the Contractor, the Contractor must reimburse Canada for that amount.

4. The Parties agree that nothing herein is intended to limit any insurable interest of the Contractor nor to limit the amounts otherwise recoverable under any insurance policy. The Parties agree that to the extent that the insurance coverage required to be maintained by the Contractor under this Contract or any

additional insurance coverage maintained by the Contractor, whichever is greater, is more than the limitations of liability described in sub article (2), the limitations provided herein are increased accordingly and the Contractor shall be liable for the higher amount to the full extent of the insurance proceeds recovered.

5. If, at any time, the total cumulative liability of the Contractor for losses or damage suffered by Canada caused by the Contractor's performance of or failure to perform the Contract, excluding liability described under subsection 2(a), (b), (c) and (d) exceeds $40 million, either Party may terminate the Contract by giving notice in writing to the other Party and neither Party will make any claim against the other for damages, costs, expected profits or any other such loss arising out of the termination. However, no such termination or expiry of the Contact shall reduce or terminate any of the liabilities that have accrued to the effective date of the termination but which liabilities are subject to the limitations as specified in sub-article (1) through (4) above.

6. The date of termination pursuant to this Article, shall be the date specified by Canada in its notice to terminate, or, if the Contractor exercises the right to terminate, in a notice to the Contractor from Canada in response to the Contractor's notice to terminate. The date of termination shall be in Canada's discretion to a maximum of 12 months after service of the original notice to terminate served by either Party pursuant to sub-article 5, above.

7. Nothing shall limit Canada's other remedies, including Canada's right to terminate the Contract for default for breach by the Contractor of any of its obligations under this Contract, notwithstanding that the Contractor may have reached any limitation of its liability hereunder.

7.14 Financial Security

7.14.1 Term of Financial Security

Any bond, bill of exchange, letter of credit or other security provided by the Contractor to Canada in accordance with the terms of the Contract must not expire before 90 days after the completion date indicated in the Contract.The Contracting Authority may, at its sole discretion, require an extension to the period of the security, for which the Contractor may apply for financial compensation.

The Contracting Authority may, at its sole discretion, return the security to the Contractor before the expiration, provided however that no risk will accrue to Canada as a result of this.

7.14.2 Contract Financial Security

1. The Contractor must provide one of the following contract financial securities within **five (5)** Working Days after the date of contract award:

(a) a performance bond (form PWGSC-TPSGC 505) and a labour and material payment bond (form PWGSC-TPSGC 506), each in the amount of 20 percent of the Contract Price;

OR

(b) a security deposit as defined below in the amount of 10 percent of the Contract Price.

Any bond must be accepted as security by one of the bonding companies listed in Treasury Board Contracting Policy, Appendix L, Acceptable Bonding Companies (http://www.tbs-sct.gc.ca/pol/doc-eng.aspx?id=12027). The bond forms mentioned in (a) above are available at: http://www.tpsgc-pwgsc.gc.ca/app-acq/forms/formulaires-forms-eng.html.

2. If, for any reason, Canada does not receive the financial security in the amount set out above within the specified period, the Contractor will be in default. Canada may, at its discretion, terminate the Contract for default pursuant to the Contract default provision, accept another bid, reject all bids or issue a new bid solicitation.

3. Security deposits in the form of government guaranteed bonds with coupons attached will be accepted only if all coupons that are unmatured, at the time the security deposit is provided, are attached to the bonds. The Contractor must provide written instructions concerning the action to be taken with respect to coupons that will mature while the bonds are pledged as security, when such coupons are in excess of the security deposit requirement.

4. If the security deposit is in the form of a bill of exchange, Canada will deposit the bill of exchange in an open account in the Consolidated Revenue Fund. Bills of exchange that are deposited to the credit of the Consolidated Revenue Fund will bear simple interest, calculated on the basis of the rates which are in effect during the period the deposit is held.

These rates are published monthly by the Department of Finance and are set to be equal to the average yield on 90-day Treasury Bills, less 1/8 of 1 percent. Interest will be paid annually or, when the security deposit is returned to the Contractor, if earlier. The Contractor may, however, request Canada to hold and not cash the bill of exchange, in which case no interest will become payable.

5. Canada may convert the security deposit to the use of Canada if any circumstance exists which would entitle Canada to terminate the Contract for default, but any such conversion will not constitute termination of the Contract.

6. When Canada so converts the security deposit:

(a) the proceeds will be used by Canada to complete the Work according to the conditions of the Contract, to the nearest extent that it is feasible to do so and any balance left will be returned to the Contractor on completion of the warranty period; and

(b) if Canada enters into a contract to have the Work completed, the Contractor will:

(i) be considered to have irrevocably abandoned the Work; and

(ii) remain liable for the excess cost of completing the Work if the amount of the security deposit is not sufficient for such purpose. "Excess cost" means any amount over and above the amount of the Contract Price remaining unpaid together with the amount of the security deposit.

7. If Canada does not convert the security deposit to the use of Canada before completion of the contract period, Canada will return the security deposit to the Contractor within a reasonable time after such date.

8. If Canada converts the security deposit for reasons other than bankruptcy, the financial security must be reestablished to the level of the amount stated above so that this amount is continued and available until completion of the contract period.

9. In this Article,

"security deposit" means

(a) a bill of exchange that is payable to the Receiver General for Canada and certified by an approved financial institution or drawn by an approved financial institution on itself; or

(b) a government guaranteed bond; or

(c) an irrevocable standby letter of credit, or

(d) such other security as may be considered appropriate by the Contracting Authority and approved by Treasury Board;

"approved financial institution" means

(a) any corporation or institution that is a member of the Canadian Payments Association;

(b) a corporation that accepts deposits that are insured by the Canada Deposit Insurance Corporation or the Régie de l'assurance-dépôts du Québec to the maximum permitted by law;

(c) a credit union as defined in paragraph 137(6) of the Income Tax Act;

(d) a corporation that accepts deposits from the public, if repayment of the deposits is guaranteed by a Canadian province or territory;

(e) the Canada Post Corporation.

"government guaranteed bond" means a bond of the Government of Canada or a bond unconditionally guaranteed as to principal and interest by the Government of Canada that is:

(a) payable to bearer;

(b) accompanied by a duly executed instrument of transfer of the bond to the Receiver General for Canada in accordance with the Domestic Bonds of Canada Regulations;

(c) registered in the name of the Receiver General for Canada.

"irrevocable standby letter of credit"

(a) means any arrangement, however named or described, whereby a financial institution (the "Issuer"), acting at the request and on the instructions of a customer (the "Applicant"), or on its behalf,

(i) will make a payment to or to the order of Canada, as the beneficiary;

(ii) will accept and pay bills of exchange drawn by Canada;

(iii) authorizes another financial institution to effect such payment, or accept and pay such bills of exchange; or

(iv) authorizes another financial institution to negotiate, against written demand(s) for payment, provided that the conditions of the letter of credit are complied with.

(b) must state the face amount which may be drawn against it;

(c) must state its expiry date;

(d) must provide for sight payment to the Receiver General for Canada by way of the financial institution's draft against presentation of a written demand for payment signed by the authorized departmental representative identified in the letter of credit by his\her office;

(e) must provide that more than one written demand for payment may be presented subject to the sum of those demands not exceeding the face amount of the letter of credit;

(f) must provide that it is subject to the International Chamber of Commerce (ICC) Uniform Customs and Practice (UCP) for Documentary Credits, 2007 Revision, ICC Publication No. 600. Pursuant to the ICC UCP, a credit is irrevocable even if there is no indication to that effect; and

(g) must be issued (Issuer) or confirmed (Confirmer), in either official language, by a financial institution that is a member of the Canadian Payments Association and is on the letterhead of the Issuer or Confirmer. The format is left to the discretion of the Issuer or Confirmer.

7.15 Foreign Nationals (Canadian Contractor)

The Contractor must comply with Canadian immigration requirements applicable to foreign nationals entering Canada to work temporarily in fulfillment of the Contract. If the Contractor wishes to hire a foreign national to work in Canada to fulfill the Contract, the Contractor should immediately contact the nearest Service Canada regional office to enquire about Citizenship and Immigration Canada's requirements to issue a temporary work permit to a foreign national. The Contractor is responsible for all costs incurred as a result of non-compliance with immigration requirements

7.16 Sub-contracts and Sub-contractor List

The Contracting Authority is to be notified, in writing, of any changes to the list of subcontractors before commencing the work.

When the Contractor sub-contracts work, a copy of the sub-contract purchase order is to be passed to the Contracting Authority. In addition, the Contractor must monitor progress of sub-contracted work and inform the Inspection Authority on pertinent stages of work to permit inspection when considered necessary by the Inspection Authority.

7.17 Work Schedule and Reports

No later than **five (5) calendar days** after contract award, the preliminary work schedule provided with the bid must be revised, detailed and resubmitted in preparation to the contract award meeting.

The Contractor must provide a detailed work schedule showing the commencement and completion dates for the Work in the available work period, including realistic target dates for significant events.

During the work period the schedule is to be reviewed on an ongoing basis by the Inspection Authority and the Contractor, updated when necessary, and available in the Contractor's office for review by Canada's authorities to determine the progress of the Work.

7.18 Insulation Materials - Asbestos Free

All materials used to insulate or re-insulate any surfaces on board the vessel must meet Transport Canada Marine standards, for commercial marine work, and, for all work, be free from asbestos in any form. The Contractor must ensure that all machinery and equipment located below or adjacent to surfaces to be re-insulated are adequately covered and protected before removing existing insulation.

7.19 Trade Qualifications

The Contractor must use qualified, certificated (if applicable) and competent tradespeople and supervision to ensure a uniform high level of workmanship. The Technical Authority may request to view and record details of the certification and/or qualifications held by the Contractor's tradespeople. This request should not be unduly exercised but only to ensure qualified tradespeople are on the job.

7.20 ISO 9001:2008 - Quality Management Systems

In the performance of the Work described in the Contract, the Contractor must comply with the requirements of:

> ISO 9001:2008 - Quality management systems - Requirements, published by the International Organization for Standardization (ISO), current edition at date of submission of Contractor's bid.

The Contractor's quality management system must address each requirement contained in the standard, however, the Contractor is not required to be registered to the applicable standard.

7.21 Project Management Services

The Contractor is required to provide their own Project Management Team experienced and capable of successfully managing the ship repair contract as defined herein. Project management personnel, services and deliverables must comply with the requirements detailed in the contract.

Introduction

Project management refers to system integration and technical control as well as business management of the CCGS Henry Larsen Vessel Life Extension Refit Project.

The Contractor must provide the following within 15 days of Contract Award:

Project Action Plan (PAP):
The Contractor must document the project management for the work in a Project Action Plan and must update this plan at monthly intervals or more frequently as required by the Contracting Authority.

The PAP must comprise:

i) organization structure charts;
ii) a master schedule, support schedules, sub-Contractor schedules and work;
iii) Government Furnished Equipment (GFE), and Contractor Furnished Equipment (CFE) delivery dates as a minimum.

The monthly updates to the PAP must comprise schedule updates, a progress report and review meetings. The components of the PAP and its updates are described in the following sub-sections.

1) Project Integration Management:
The Contractor must provide an overall project organizational chart identifying all key personnel and sub-Contractors. Further, the Contractor must identify the contract-related work each sub-Contractor is responsible for.

2) Change Management Log:
The Contractor must provide a Change Management Log that must be used for the duration of the project to manage project changes.

The Change Management Log must track project issues with the following criteria:

i) Individual tracking number;
ii) Date issue was raised;
iii) Expected resolution date;
iv) Date issue was resolved;
v) Brief note of resolution on issue;
vi) Individual who raised issue;
vii) Individual assigned to resolve issue;
viii) Risk Factor.

3) Risk Management Plan:
The Contractor must identify emergent risks and rank these risks by impact on the work. Mitigation strategies must be identified for all "High" risks. The "Risk Management Plan" must be updated at least bi-weekly and provided to the Technical and Contracting Authorities. The "Risk Management Plan" must be included in the monthly progress meeting Record of Decisions.

4) Scheduling:
The Contractor must provide a schedule(s) that breaks the work down to the system and component level. The schedule must include sub-Contractor schedules to the same level. The Contractor must update the schedule(s) on a monthly basis and the updates must be provided to the Contract Authority, the Inspection Authority and the Technical Authority.

The schedule(s) must identify all work in the project. It must include long lead items, GFE, strip outs, production, assembly, installation, bench testing, system commissioning and tests and trials, as well as all scheduled and required resources.

The schedule(s) must identify the major milestones, critical path and all interrelationships between tasks. The schedule(s) must be baselined.

The PMBoK 2005 must be used as the reference for scheduling.

5) Project Reporting:
The Contractor must provide a monthly Progress Report describing the status of the project Time Line, Cost and Performance as an introduction. Time, Cost and Performance must then be addressed in detail. The report must identify significant risks to the program and the actions taken to resolve these risks. The risk analysis must identify any impact upon delivery and actions taken to recover any slippage that may affect the contract delivery date. The report, either in hard copy or in electronic format, must be delivered monthly, three (3) working days prior to the progress review meeting to the Contract Manager, the Inspection Authority and the Technical Authority. The progress report must include sub-Contractor and major component supplier activity.

The following Management Reports and Documentation are to be prepared and maintained by the Contractor and submitted to Canada in accordance with the Contract or upon request by the Contracting Authority.

i. Production Work Schedule
ii Inspection Summary Report
Iii. Growth Work Summary

7.22 Quality Control Plan

The Contractor must implement and follow the Quality Control Plan (QCP) prepared according to the latest issue (at contract date) of ISO 10005:2005 Quality management - Guidelines for quality plans,

approved by the Inspection and the Technical Authority. The QCP must describe how the Contractor will conform to the specified quality requirements of the Contract and specify how the required quality activities are to be carried out, including quality assurance of subcontractors. The Contractor must include a traceability matrix from the elements of the specified quality requirements to the corresponding paragraphs in the QCP. The QCP must be made available to the Inspection and Technical Authority for review and approval **within five (5) calendar days** after contract award.

The documents referenced in the QCP must be made available when requested by the Inspection Authority.

The Contractor must make appropriate amendments to the QCP throughout the term of the Contract to reflect current and planned quality activities. Amendments to the QCP must be acceptable to the Inspection Authority and the Technical Authority.

Refer to Annex "G" for details.

7.23 Inspection and Test Plan

The Contractor must in support of its Quality Control Plan (QCP), implement an approved Inspection and Test Plan (ITP).

The Contractor must provide at no additional cost to Canada, all applicable test data, all Contractor technical data, test pieces and samples as may reasonably be required by the Inspection Authority to verify conformance to contract requirements. The Contractor must forward at his expense such technical data, test data, test pieces and samples to such location as the Inspection Authority may direct.

Refer to Annex "G" for details.

7.24 Equipment/Systems: Inspection/Test

Inspections, Tests and Trials of Equipment, Machinery and Systems shall be conducted in accordance with the Specification. The Contractor is responsible for performing, or having performed, all Inspections, Tests and Trials necessary to substantiate that the materiel and services provided conform to contract requirements.

Refer to Annex "G" for details.

7.25 Environmental Protection

The Contractor and its sub-contractors engaged in the Work on a Crown vessel must carry out the Work in compliance with applicable municipal, provincial and federal environmental laws, regulations and industry standards.

The Contractor must have detailed procedures and processes for identifying, removing, tracking, storing, transporting and disposing of all potential pollutants and hazardous material encountered, to ensure compliance as required above. The contractor must maintain in force their Environmental Protection procedures through the course of the contract.

All waste disposal certificates are to be provided to the Technical Authority, with information copies sent to the Contracting Authority. Furthermore, additional evidence of compliance with municipal, provincial and federal environmental laws and regulations is to be furnished by the Contractor to the Contracting Authority when so requested.

The Contractor must have environmental emergency response plans and/or procedures in place. Contractor and subcontractor employees must have received the appropriate training in emergency preparedness and response. Contractor personnel engaging in activities which may cause environmental impacts or potential non compliance situations, must be competent to do so on the basis of appropriate education, training, or experience.

7.26 Hazardous Waste

1. The Contractor acknowledges that sufficient information has been provided by Canada with respect to the location and estimated amount of hazardous materials such as asbestos, lead PCBs, silica or other hazardous materials or toxic substances.

2. The price includes all costs associated with the removal, handling, storage, disposal and/or working in the vicinity of hazardous materials such as asbestos, lead, PCBs, silica and other hazardous materials or toxic substances on board the vessel, including those costs resulting from the need to comply with applicable laws and regulations in relation to the removal, handling, disposal or storage of hazardous materials or toxic substances.

3. The completion date for the Work takes into account the fact that the removal, handling, storage, disposal and/or working in the vicinity of hazardous materials such as asbestos, lead, PCBs, silica and other hazardous materials or toxic substances may be affected by the need to comply with applicable federal, provincial and municipal laws or regulations and that this will not be considered to be an excusable delay.

7.27 Supervision of Fueling and Disembarking Fuel

The Contractor must ensure that fueling and disembarking of fuel from Canadian government vessels are conducted under the supervision of a responsible supervisor trained and experienced in these operations.

All fueling and disembarking of fuel on CCGS Samuel Risley must be done is accordance with the Contractor's submitted and accepted procedures.

7.28 Fire Protection, Fire Fighting and Training

The Contractor must maintain in force their fire protection, fire fighting and training procedures through the course of the Contract.

7.29 Loan of Equipment - Marine

The Contractor may apply for the loan of the Government special tools and test equipment particular to the subject vessel as identified in the Specifications. The provision of other equipment required for the execution of work in the Specifications is the sole responsibility of the Contractor.
Equipment loaned under this provision must be used only for work under this Contract and may be subject to demurrage charges if not returned on the date required by Canada. In addition, equipment loaned under the above provision must be returned in a like condition, subject to normal wear and tear.

A list of Government equipment that the Contractor intends to request must be submitted to the Contracting Authority within **three (3) days** of Contract Award to permit timely supply or for alternate arrangements to be made. The request must state the time frame for which the equipment is required.

Refer to Annex "J2" for Deliverables/Certifications.

7.30 Welding Certification

1. The Contractor must ensure that welding is performed by a welder certified by the Canadian Welding Bureau (CWB) in accordance with the requirements of the following Canadian Standards Association (CSA) standards:

(a) CSA W47.1-03, Certification for Companies for Fusion Welding of Steel (Minimum Division Level 2.1); and

(b) CSA W47.2-M1987 (R2003), Certification for Companies for Fusion Welding of Aluminum (Minimum Division Level 2.1).

2. In addition, welding must be done in accordance with the requirements of the applicable drawings and specifications.

3. Before the commencement of any fabrication work, and upon request from the Technical Authority, the Contractor must provide approved welding procedures and/or a list of welding personnel intended to be used in the completion of the work. The list must identify the CWB welding procedure qualifications attained by each of the personnel listed and must be accompanied by a copy of each person's current CWB welding certification.

7.31 Procedures for Design Change or Additional Work

These procedures must be followed for any design change or additional work.

1. When Canada requests design change or additional work:

a.The Technical Authority will provide the Contracting Authority with a description of the design change or additional work in sufficient detail to allow the Contractor to provide the following information:

i.any impact of the design change or additional work on the requirement of the Contract;

ii.a price breakdown of the cost (increase or decrease) associated with the implementation of the design change or the performance of the additional work using either the form PWGSC-TPSGC 1686, Quotation for Design Change or Additional Work, or the form PWGSC-TPSGC 1379 (PDF 56KB) - (Help on File Formats) Work Arising or New Work.

iii.a schedule to implement the design change or to perform the additional work and the impact on the contract delivery schedule.

b.The Contracting Authority will then forward this information to the Contractor.

c.The Contractor will return the completed form to the Contracting Authority for evaluation and negotiation. Once agreement has been reached, the form must be signed by all parties in the appropriate signature blocks. This constitutes the written authorization for the Contractor to proceed with the work, and the Contract will be amended accordingly.

2. When the Contractor requests design change or additional work:

a.The Contractor must provide the Contracting Authority with a request for design change or additional work in sufficient detail for review by Canada.

b.The Contracting Authority will forward the request to the Technical Authority for review.

c.If Canada agrees that a design change or additional work is required, then the procedures detailed in paragraph 1 are to be followed.

d.The Contracting Authority will inform the Contractor in writing if Canada determines that the design change or additional work is not required.

3. Approval - The Contractor must not proceed with any design change or additional work without the written authorization of the Contracting Authority. Any work performed without the Contracting Authority's written authorization will be considered outside the scope of the Contract and no payment will be made for such work. SACC Manual Clause B5007C (2010-01-11) Procedures for Design Change or Additional Work

In addition, refer to Annex "F".

7.32 Vessel Manned Refits

1.The vessel will be manned during the work period and will be considered to be in commission. The vessel during that period will remain in the care or custody of Canada and under its control.

2.Fire fighting equipment must be readily accessible and made available by the Contractor should a fire emergency arise. The Contractor must take adequate precautions when burning or welding is carried out in compartments or other confined areas of the vessel.

3.The vessel will be crewed for approximately one week after arrival at the VLE Shipyard and again for two weeks prior to the end of the work period. During this three week period the ship shall be habitable. Crew shall have personnel gear onboard living in cabins, using washrooms and galley operational. The vessel will be crewed during this period the vessel will be crewed to its "Safe Manning Level" which entails 22 personnel.

Refer to Annex "K" for details.

7.33 Vessel Unmanned Refits

The vessel will be unmanned during the work period *with the exception as noted above at 7.30* , and will be considered to be out-of commission. The vessel during that period will be in the care or custody of the Contractor and under its control.

Refer to Annex "K" for details.

7.34 Pre-Refit Meeting

A Pre-Refit meeting will be convened and chaired by the Contracting Authority at the Contractor's facility at a time to be determined. At that meeting the contractor will introduce all its management personnel as per its organization chart, and Canada will introduce authorities. Details of ship's arrival and work commencement will be discussed.

7.35 Progress Meetings

Progress meetings, chaired by the Contracting Authority, will take place at the Contractor's facility as and when required, generally once a month. Interim meetings may also be scheduled. Contractor attendees at these meetings will, as a minimum, be its Contract (Project) Manager, Production Manager (Superintendent) and Quality Assurance Manager. Progress meetings will generally incorporate Technical meetings to be chaired by the Technical Authority.

During each PRM the Contractor shall provide a status of the overall contracted project, including programmatic, production,test, Integrated Logistics Support, subcontract, risk issues, and progress as it relates to the Project Action Plan (PAP) and Schedule, and the associated Work Breakdown Structure. For each PRM, the Contractor shall:

(a) Ensure that Contractor data, personnel and facilities are available for each formal meeting in order that the meetings may be conducted in an efficient manner; and

(b) Include the following agenda items for discussion and resolution:
- i. PAP and updates;
- ii. Contractual Issues;
- iii. Financial Issues;
- iv. Technical Issues;
- v. Environmental, Health and Safety Issues; and
- vi. Previous action items.

The PWGSC CA or authorized representative will chair the PRMs and will approve decisions prior to adjourning the PRM, with the resulting decisions reflected in the Meeting Minutes.

7.36 Outstanding Work and Acceptance

1. The Inspection Authority, in conjunction with the Contractor, will prepare a list of outstanding work items at the end of the work period. This list will form the annexes to the formal acceptance document for the vessel. A contract completion meeting will be convened by the Inspection Authority on the work completion date to review and sign off the form PWGSC-TPSGC1205, Acceptance. In addition to any amount held under the Warranty Holdback Clause, a holdback of twice the estimated value of outstanding work will be held until that work is completed.

2. The Contractor must complete the above form in three (3) copies, which will be distributed by the Inspection Authority as follows:

   (a) original to the Contracting Authority;
   (b) one copy to the Technical Authority;
   (c) one copy to the Contractor.

Refer to Annex "I" for details of Acceptance Procedures and Reports.

7.37 Scrap and Waste Material

Despite any other provision of the Contract, scrap and waste materials other than accountable material, derived from the Contract, will revert to the Contractor as part of the Contract Price.

7.38 Stability

The Contractor will be solely responsible for the stability and trim of the ship during the period the vessel is in the Contractor's facility, including docking and undocking. The Contractor must maintain weight change information pertinent to the vessel's stability during the docking period. The Technical Authority will supply the Contractor with cross curves of stability, hydrostatic curves, tank status, location of centre of gravity, and other information relevant to the ship's condition upon handing over of the vessel.

7.39 Vessel Access by Canada

Canada reserves the right to have its personnel carry out limited work on equipment on board the vessel. This work will be carried out at times mutually acceptable to Canada and the Contractor.

7.40 Title to Property - Vessel

If the Contractor is in default in carrying any of its obligations under the Contract, Canada, or its agents, will have the immediate right to enter the shipyard, without first obtaining a court order, to take possession of the vessel and all other property of Canada, including, but not limited to, work-in-process located on the premises, and to perform any further work required to enable the vessel and other such property to be removed from the shipyard.

7.41 Workers Compensation

The Contractor must maintain its account in good standing with the applicable provincial or territorial Workers' Compensation Board for the duration of the Contract.

7.42 Dispute Resolution

The parties agree to follow the procedures below for the settlement of any disputes which may arise throughout the life of this Contract prior to seeking redress through court procedures:

(a) Disputes arising from this Contract will in the first instance be resolved by the Contracting Authority and the Contractor's Contract Administrator within 15 Working Days or such additional time as may be agreed to by both parties.

(b) Failing resolution under (a) above, the Manager of the Ship Refit Division (MD) of the Marine Systems Directorate at PWGSC and the Contractor's Representative Supervisor will attempt to resolve the dispute within an additional fifteen (15) Working Days.

(c) Failing resolution under (a) or (b) above, the Senior Director of the Marine Systems Directorate at PWGSC, and the Contractor's Senior Management will attempt to resolve the dispute within an additional thirty (30) Working Days.

(d) Notwithstanding the above procedure, either party may seek a decision through the courts at any time during the dispute.

7.43 Failure to Deliver

Time is of the essence of the Contract. Changes in the Completion date not caused by Canada are Contractor defaults, will prejudice Canada and are at the Contractor's expense. The Completion date will not be extended without consideration being provided by the Contractor acceptable to Canada in the form of adjustment to the price, warranty or services to be provided.

7.44 Care, Custody and Control

Refer to Annex "I" and Supplemental General Conditions 1029 (2010-08-16) Ship Repairs Article 09 Where Vessel Out of Commission.

Refer to Annex "I" and Supplemental General Conditions 1029 (2010-08-16) Ship Repairs Article 08 Where Vessel In Commission.

7.45 Permits, Licenses and Certificates

The Contractor must obtain and maintain all permits, licenses and certificates of approval required for the work to be performed under any applicable federal, provincial or municipal legislation. The Contractor is responsible for any charges imposed by such legislation or regulations. Upon request, the Contractor must provide a copy of any such permit, license or certificate to Canada.

7.46 Export Licenses:

Where material is to be imported into Canada, the Contractor is responsible for obtaining all necessary export licences from the country of origin in sufficient time to enable the export.

7.47 Travel and Living Expenses - National Joint Council Travel Directive

The Contractor will be reimbursed its authorized travel and living expenses reasonably and properly incurred in the performance of the Work, at cost, without any allowance for profit and/or administrative overhead, in accordance with the meal, private vehicle and incidental expenses provided in Appendices B, C and D of the National Joint Council Travel Directive and with the other provisions of the directive referring to "travellers", rather than those referring to "employees".

All travel must have the prior authorization of the Contracting Authority.

All payments are subject to government audit.

Estimated Cost: $ 43,000.00

7.48 Equivalency of Equipment

(a) The Contractor guarantees that the equipment to be delivered under the Contract is:

(i) equivalent in form, fit, function and quality to the existing equipment owned by Canada that was described in the bid solicitation that resulted in the Contract; and

(ii) fully compatible, interchangeable and interoperable with the existing equipment owned by Canada.

(c) The Contractor also guarantees that any warranties with third parties concerning the existing equipment owned by Canada will not be adversely affected by Canada's use of the equipment delivered under the Contract (for example, by interconnecting the equipment) or by any other services provided by the Contractor under the Contract. If Canada determines in its sole discretion that any such warranty has been adversely affected, at Canada's sole option, the Contractor must:

(i) pay to Canada the amount that Canada must pay to the original supplier (or an authorized reseller of that supplier) to re-certify Canada's existing equipment for warranty purposes and any other amounts paid by Canada to a third party in order to restore the equipment to full warranty status;

(ii) perform all warranty work on Canada's existing equipment in place of the original supplier; or

(iii) pay to Canada the amount that Canada must pay to the original supplier (or an authorized reseller of that supplier) to perform maintenance work on the equipment that otherwise would have been covered by the warranty.

(c) The Contractor agrees that, during the Contract Period, if Canada determines that any of the equipment is not equivalent in form, fit, function and quality to the existing equipment owned by Canada or is not fully compatible, interchangeable and interoperable with the existing equipment owned by Canada, the Contractor must immediately and entirely at its own expense take all steps necessary to ensure that the equipment satisfies these requirements (for example, by implementing any additional software or firmware), failing which Canada will have the immediate right to terminate the Contract for default. The Contractor agrees that, if Canada terminates the Contract for this reason, the Contractor must pay to Canada the costs of reprocuring the equipment from a third party and the difference, if any, in price paid by Canada to the third party. The Contractor acknowledges that its failure to deliver equivalent equipment that satisfies the above requirements may result in the Contractor (as well as its affiliates and any other entities with whom the Contractor or its principals do not deal at arm's length) being unable to propose equivalent substitutes in response to future PWGSC bid solicitations.

7.49 Exchange Rate Fluctuation Adjustment

1. The foreign currency component (FCC) is defined as the portion of the price or rate that will be directly affected by exchange rate fluctuation. The FCC should include all related taxes, duties and other costs paid by the Bidder and which are to be included in the adjustment amount.

2. For each line item where a FCC is identified, Canada assumes the risks and benefits for exchange rate fluctuation, as shown in the Basis of Payment. For such items, the exchange rate fluctuation amount is determined in accordance with the provision of this clause.

3. The total price paid by Canada on each invoice will be adjusted at the time of payment, based on the FCC and the exchange rate fluctuation provisions in the contract. The exchange rate adjustment amount will be calculated in accordance with the following formula:

   Adjustment = FCC x Qty x (i1 - i0) / i0
   where formula variables correspond to:
   FCC = Foreign Currency Component (per unit)
   i0 = Initial exchange rate (CAN$ per unit of foreign currency [e.g. US$1])
   i1 = exchange rate for adjustments (CAN$ per unit of foreign currency [e.g. US$1])
   Qty = quantity of units

4. The initial exchange rate is typically set as the noon rate as published by the Bank of Canada on the solicitation closing date.

5. For goods, the exchange rate for adjustment will be the noon rate as published by the Bank of Canada on the date the goods were delivered. For services, the exchange rate for adjustment will be the noon rate on the last business day of the month for which the services were performed. For advance payments, the exchange rate for adjustment will be the noon rate on the date the payment was due. The most recent noon rate will be used for non-business days.

6. The Contractor must indicate the total exchange rate adjustment amount (either upward, downward or no change) as a separate item on each invoice or claim for payment submitted under the Contract. Where an adjustment applies, the Contractor must submit with their invoice form PWGSC-TPSGC 450, Claim for Exchange Rate Adjustments.

7. The exchange rate adjustment will only be applied where the exchange rate fluctuation is greater than 2% (increase or decrease), calculated in accordance with column 8 of form PWGSC-TPSGC 450 (i.e [i1 - i0) / i0]).

8. Canada reserves the right to audit any revision to costs and prices under this clause.

7.50 Government Supplied Material

Government Supplied Material (GSM) is the property of the Government of Canada. The Contractor is responsible for maintaining satisfactory records of the disposition of all GSM. The GSM described herein must be used in the manufacture of the item(s) contracted. Only the quantity of material stated herein will be supplied by Canada without charge. If GSM does not conform to requirements for incorporation into the Work, the Contractor shall make a request for replacement GSM in writing to Canada within 30 days after the receipt of GSM. At Canada's instruction, the Contractor shall replace or repair any GSM, at the prices and In Accordance with Contract provisions relating to Unscheduled Work. The Contractor shall replace or make good, at its own expense, any GSM which fail to conform to the Contract requirements as a result of faulty or inefficient cutting, manufacture or workmanship by the Contractor.

In the event of problems with the GSM supplied, the Contractor shall advise the Contracting Authority immediately, identifying the specific problem. Should the Contractor proceed Without guidance from the Contracting Authority, any costs incurred, and loss of GSM shall be at the Contractor's expense.

The Contractor shall repair or replace at its own expense GSM that is damaged or lost while in the Contractor's care.

While a final GSM accounting is not automatically required for every Contract, Canada reserves the right to request a final accounting at any time within one year of the Contract completion date.

The following items will be supplied as Government Supplied Material (GSM) for the Henry Larsen:

Item	Annex A reference	Quantity
i) Antennas	52.3.12	3
ii) CCTV System and Equipment Racks	53.1.3	1 CVTV system consisting of 6 cameras, and 4 equipment racks
iii) Sensor Cable	57.3.1	120 feet
iv) Monitor elements	67.3.10	4
v) Filter/water Separator expendable cartridges	67.3.11	2 Coalescer Elements 1 Separator Element

vi) Silica Gel	67.3.12	6 KG
vii) Internal Lighting Fixtures		

7.51 Government Furnished Equipment

All Government Property must be used by the Contractor solely for the purpose of the Contract and remains the property of Canada. The Contractor must maintain adequate Accounting records of all Government Property and, whenever feasible, mark it as being the property of Canada.

The Contractor must take reasonable and proper care of all Government Property while it is in its possession or subject to its control. The Contractor is responsible for any loss or damage resulting from its failure to do so other than loss or damage caused by ordinary wear and tear. All Government Property, unless it is installed or incorporated in the Work, must be returned to Canada on demand. All scrap and all waste materials, articles or things that are Government Property must, unless provided otherwise in the Contract, remain the property of Canada and must be disposed of only as directed by Canada.

At the time of completion of the Contract, and if requested by the Contracting Authority, the Contractor must provide to Canada an inventory of all Government Property relating to the Contract.

The following items will be supplied as Government Furnished Equipment:

Item	Annex A reference	Quantity
i) Intering Roll stabilization and rapid heeling System.	21.3	1
ii) Norselight XS3000 R60 230V NR 3000 watt searchlight with special Nickel Rodium Reflector.	46.2.1.2	1
iii) Norselight Zenon Power supply for 1000-3000Watt EX-Series	46.2.1.3	1
iv) Norselight R60 new generation searchlight control panel.	46.2.1.4	1
v) Deep Fryer	*49.3.2*	*1*
vi) VHF System	51.1.2	3
vii) Doppler Speed Log System	52.1.3	1
viii) Navtex Receiver system	54.1.2	1
ix) Sailor Fleet Broadband 500 System	55.1.12	1
x) Dual Furuno GP-150D GPS/DGPS system	58.3.11	1
xi) Heater	1209-14-10	4
xii) Heater retainer	1209-19-1	13
xii) Heater retainer	1209-19-2	120
xii) Heater retainer	1209-20-14	4
xiii)Track assy.	1208-224-1	1
xiv) Pinion gears	1163-13-2	2

ANNEX A

Technical Specification

CCGS Leonard J. Cowley VLE Refit 2015 (Rev 25)

ANNEX B

BASIS OF PAYMENT PRICE

Annex “B” will form the Basis of Payment for the resulting Contract and should not be filled in at the bid submission stage.

B1 Contract Firm Price

A)	**Known Work** For work as stated in Article 7. 1, Specified in Annex "A" and detailed in the attached Cumulative Pricing Data Sheets, for a FIRM PRICE of:	**$**
B)	**GST / HST as applicable of line a) only**	**$**
C)	**Cost of Financial Security as per 7.13**	**$**
D)	**Total Firm Price GST/HST Included:**	**$**

B2 Unscheduled Work

The Contractor will be paid for unscheduled work arising, as authorized by Canada. The authorized unscheduled work will be calculated as follows:

"Number of hours (to be specified by Canada and accepted by Contractor as per the procedures of this Contract) X $_____, being the Contractor's firm hourly charge-out labour rate which includes overhead, consumables, and profit, plus net laid-down cost of materials to which will be added a mark-up of 10%, plus applicable taxes, of the total cost of material and labour. This rate shall be a blended rate for all classes of labor, engineering and foreperson.

The firm hourly charge-out labour rate and the material mark-up will remain firm for the duration of the Contract and any subsequent amendments."

B2.1: Notwithstanding definitions or useage elsewhere in this document, or in the Contractor's Cost Management System, when negotiating hours for unscheduled work, PWGSC will consider only those hours of labour directly involved in the production of the subject work package.

Elements of Related Labour Costs identified in B2.2 below, will not be negotiated, but will be compensated for in accordance with B2.2.

B2.2: Allowance for Related Labour Costs such as: Management, all Supervision, Purchasing and Material Handling, Quality Assurance and Reporting, First Aid, Gas Free Certification Inspecting and Reporting, Estimating, and Preparing Unscheduled Work Submissions will be included as Overhead for the purposes of determining the Charge-out Labour Rate entered in line B2 above.

B2.3: The 10% mark-up rate for materials will also apply to subcontracted costs. The mark-up rate includes any allowance for material and subcontract management not allowed for in the Chargeout Labour Rate. The Contractor will not be entitled to a separate labour component for the purchase and handling of materials or subcontract administration.

Pro-rated Prices Unscheduled Work

Hours and prices for unscheduled work shall be based on comparable historical data applicable to similar work at the same facility, or shall be determined by pro-rating the quoted Work costs in the Contract when in similar areas of the vessel.

B3 Overtime

The Contractor must not perform any overtime under the Contract unless authorized in advance and in writing by the Contracting Authority. There will be no overtime payment for Known Work. Any request for payment must be accompanied by a copy of the overtime authorization and a report containing the overtime performed pursuant to the written authorization. Overtime shall not be paid unless authorized in writing by the Contracting Authority.

Payment for authorized overtime will be calculated as follows:

Time and One-Half Rate: $ _____/ per person hour
Double Time Rate: $ _____/ per person hour

This rate shall be a blended rate for all classes of labor, engineering and foreperson and shall include all overheads, supervision and profit.

These rates will remain firm for the duration of the Contract, including all amendments and are subject to audit if considered necessary by Canada.

** Regular time is defined as an 8 hour work day*

*** Overtime Time and One-Half Rate is defined as time in excess of the regular time,.*

**** Overtime Double Time Rate is defined as Sundays and Statutory Holidays*

B4 Daily Services Fee

In the event of a delay in the performance of the Work that lengthens the Work period beyond the date specified in this Contract, and if such delay is recognized and agreed upon by the Contracting Authority as being attributable to Canada, Canada agrees to pay the Contractor the daily services fee, described below, for each day of such delay. This fee shall be the sole liability of Canada to the Contractor for the delay.

The firm daily services fee is:

(a) For a working day: $_____

(b) For a non-working day: $_____

The above fees shall include but not be limited to, all aspects of the following costs: Project Management Services, Administrative Support, Production Services, Quality Assurance, Material Support, Planned Maintenance and Ship Services, and all other resources and direct costs needed to maintain the Vessel at the Contractor's facility. These fees are firm and not subject to any additional charges for mark-up or profit.

B5 Vessel, Refit, Repair or Docking Cost

The following costs must be included in the price:

1. Ship Services: include all costs for ship services such as water, steam, electricity, etc., required for vessel maintenance for the duration of the Contract.

2. Docking and Undocking include:

(a) all costs resulting from drydocking, wharfage, security, shoring, shifting and/or moving of the vessel within the successful Bidder's facility;

(b) the cost of services to tie up the vessel alongside and to cast off.

Unless specified otherwise, the vessel will be delivered by Canada to the successful Bidder's facility alongside a mutually agreed safe transfer point, afloat and upright, and the successful Bidder will do the same when the Work is completed. The cost of services to tie up the vessel alongside and to cast off must be included in the evaluation price.

3. Field Service Representatives/Supervisory Services: include all costs for field service representatives/supervisory services including manufacturers' representatives, engineers, etc. The Contractor is responsible for the performance of all subcontractors and FSRs.

These services must not be an extra charge except where unscheduled work requiring these services is added to the Contract.

4. Removals: include all costs for removals necessary to carry out the Work and will be the responsibility of the successful Bidder whether or not they are identified in the specifications, except those removals not apparent when viewing the vessel or examining the drawings. The successful Bidder will also be responsible for safe storage of removed items and reinstalling them on completion of the Work. The successful Bidder will be responsible for renewal of components damaged during removal.

5. Sheltering, Staging, Cranage and Transportation: include the cost of all sheltering, staging including handrails, cranage and transportation to carry out the Work as specified.

The Contractor will be responsible for the cost of any necessary modification of these facilities to meet applicable safety regulations.

B6 Pricing Data Sheets

Parameters from the Pricing Data Sheets will be used at Canada's sole discretion in the determination of unscheduled work price.

ANNEX C
to PART 5 - BID SOLICITATION

FEDERAL CONTRACTORS PROGRAM FOR EMPLOYMENT EQUITY - CERTIFICATION

I, the Bidder, by submitting the present information to the Contracting Authority, certify that the information provided is true as of the date indicated below. The certifications provided to Canada are subject to verification at all times. I understand that Canada will declare a bid non-responsive, or will declare a contractor in default, if a certification is found to be untrue, whether during the bid evaluation period or during the contract period. Canada will have the right to ask for additional information to verify the Bidder's certifications. Failure to comply with any request or requirement imposed by Canada may render the bid non-responsive or constitute a default under the Contract.

For further information on the Federal Contractors Program for Employment Equity visit Employment and Social Development Canada (ESDC)-Labour's website.

Date:_____(YYYY/MM/DD) (If left blank, the date will be deemed to be the bid solicitation closing date.)

Complete both A and B.

A. Check only one of the following:

( ) A1. The Bidder certifies having no work force in Canada.

( ) A2. The Bidder certifies being a public sector employer.

( ) A3. The Bidder certifies being a federally regulated employer being subject to the *Employment Equity Act.*

( ) A4. The Bidder certifies having a combined work force in Canada of less than 100 employees (combined work force includes: permanent full-time, permanent part-time and temporary employees [temporary employees only includes those who have worked 12 weeks or more during a calendar year and who are not full-time students]).

A5. The Bidder has a combined workforce in Canada of 100 or more employees; and

( ) A5.1. The Bidder certifies already having a valid and current Agreement to Implement Employment Equity (AIEE) in place with ESDC-Labour.

OR

( ) A5.2. The Bidder certifies having submitted the Agreement to Implement Employment Equity (LAB1168) to ESDC-Labour. As this is a condition to contract award, proceed to completing the form Agreement to Implement Employment Equity (LAB1168), duly signing it, and transmit it to ESDC-Labour.

B. Check only one of the following:

( ) B1. The Bidder is not a Joint Venture.

OR

( ) B2. The Bidder is a Joint Venture and each member of the Joint Venture must provide the Contracting Authority with a completed annex Federal Contractors Program for Employment Equity - Certification. (Refer to the Joint Venture section of the Standard Instructions)

ANNEX D

INSURANCE REQUIREMENTS

D.1 Ship Repairers' Liability Insurance

1. The Contractor must obtain Ship Repairer's Liability Insurance and maintain it in force throughout the duration of the Contract, in an amount usual for a contract of this nature, but for not less than $10,000,000 per accident or occurrence and in the annual aggregate.

2. The Ship Repairer's Liability insurance must include the following:

a. Additional Insured: Canada is added as an additional insured, but only with respect to liability arising out of the Contractor's performance of the Contract. The interest of Canada as additional insured should read as follows: Canada, represented by Public Works and Government Services Canada.

b. Waiver of Subrogation Rights: Contractor's Insurer to waive all rights of subrogation against Canada as represented by Environment Canada and Public Works and Government Services Canada for any and all loss of or damage to the vessel, however caused.

c. Notice of Cancellation: The Insurer will endeavour to provide the Contracting Authority thirty (30) days written notice of cancellation.

d. Contractual Liability: The policy must, on a blanket basis or by specific reference to the Contract, extend to assumed liabilities with respect to contractual provisions.

e. Cross Liability/Separation of Insureds: Without increasing the limit of liability, the policy must protect all insured parties to the full extent of coverage provided. Further, the policy must apply to each Insured in the same manner and to the same extent as if a separate policy had been issued to each.

D.2 Commercial General Liability Insurance

1. The Contractor must obtain Commercial General Liability Insurance, and maintain it in force throughout the duration of the Contract, in an amount usual for a contract of this nature, but for not less than $10,000,000 per accident or occurrence and in the annual aggregate.

2. The Commercial General Liability Insurance policy must include the following:

(a) Additional Insured: Canada is added as an additional insured, but only with respect to liability arising out of the Contractor's performance of the Contract. The interest of Canada should read as follows: Canada, as represented by Public Works and Government Services Canada.

(b) Bodily Injury and Property Damage to third parties arising out of the operations of the Contractor.

(c) Personal Injury: While not limited to, the coverage must include Violation of Privacy, Libel and Slander, False Arrest, Detention or Imprisonment and Defamation of Character.

(d) Cross Liability/Separation of Insureds: Without increasing the limit of liability, the policy must protect all insured parties to the full extent of coverage provided. Further, the policy must apply to each Insured in the same manner and to the same extent as if a separate policy had been issued to each.

(e) Blanket Contractual Liability: The policy must, on a blanket basis or by specific reference to the Contract, extend to assumed liabilities with respect to contractual provisions.

(f) Employees and, if applicable, Volunteers must be included as Additional Insured.

(g) Employers' Liability (or confirmation that all employees are covered by Worker's compensation (WSIB) or similar program)

(h) Notice of Cancellation: The Insurer will endeavour to provide the Contracting Authority thirty (30) days written notice of policy cancellation.

(i) If the policy is written on a claims-made basis, coverage must be in place for a period of at least 12 months after the completion or termination of the Contract.

(j) Owners' or Contractors' Protective Liability: Covers the damages that the Contractor becomes legally obligated to pay arising out of the operations of a subcontractor.

(k) Sudden and Accidental Pollution Liability (minimum 120 hours): To protect the Contractor for liabilities arising from damages caused by accidental pollution incidents.

ANNEX E

WARRANTY

Warranty Procedures

1. Scope

a. The following are the procedures that suit the particular requirements for warranty considerations for a vessel on completion of a refit.

2. Reporting Failures With Warranty Potential

a. The initial purpose of a report of a failure is to facilitate the decision as to whether or not to involve warranty and to generate action to effect repairs. Therefore in addition to identification, location data, etc. the report must contain details of the defect. Warranty decisions as a general rule are to be made locally and the administrative process is to be in accordance with procedures as indicated.

b. These procedures are necessary as invoking a warranty does not simply mean that the warrantor will automatically proceed with repairs at his expense. A review of the defect may well result in a disclaimer of responsibility, therefore, it is imperative that during such a review the Department is directly represented by competent technical authority qualified to agree or disagree with the warrantor's assertions. Since the INSPECTION AUTHORITY has the closest and most active involvement of the contracted work completed this agency must assume this role.

3. Procedures

a. Immediately it becomes known to the Ship's Staff that an equipment/system is performing below accepted standards or has become defective, the procedures for the investigation and reporting are as follows:

i. The vessel advises the Technical Authority when a defect, which is considered to be directly associated the refit work, has occurred.

ii. On review of the Specification and the Acceptance Document, the Technical Authority in consort with Ship's Staff is to complete the Tombstone Data and section 1 of the Warranty Claim Form Appendix 1 of Annex "D" and forward the original to the Contractor for review with a copy to the PWGSC contracting Authority. If the PWGSC Contracting or INSPECTION AUTHORITY is unable to support warranty action, the Defect Claim Form will be returned to the originator with a brief justification. (It is to be noted that in the latter instance PWGSC will inform the Contractor of its decision and no further action will be required of the Contractor.

Warranty defect claims may be forwarded in hard copy, by fax or by e-mail whichever format is the most convenient.

iii.. Assuming the Contractor accepts full responsibility for repair, the Contractor completes Section 2 and 3 of the Warranty Claim Form, returns it to the INSPECTION AUTHORITY who confirms corrective action has been completed, and who then distributes the form to the Technical Authority and the PWGSC Contracting Authority.

b. In the event that the Contractor disputes the claim as a warranty defect, or agrees to share, the contractor is to complete Part 2 and 3 of the Warranty Claim Form with the appropriate information and forward it to the Contracting Authority who will distribute copies as necessary.

c. When a warranty defect claim is disputed by the Contractor, the Technical Authority may arrange to correct the defect by in-house resources or by contracting the work out. All associated costs must be tracked and recorded as a possible charge against the contractor by PWGSC action. Material costs and manhours expended in correcting the defect are to be recorded and entered in Section 5 of the warranty defect claim by the Technical Authority who will forward the warranty defect claim to the PWGSC Contracting Authority for action. Defective parts of equipment are to be retained pending settlement of claim.

d. Defective equipment associated with potential warranty should not normally be dismantled until the Contractor's representative has had the opportunity to observe the defect. The necessary work is to be undertaken through normal repair methods and costs must be segregated as a possible charge against a contractor by PWGSC action.

4. Liability

a. Agreement between the Contracting Authority, INSPECTION AUTHORITY, Technical Authority and the Contractor will result in one of the following conditions:

i. The Contractor accepts full responsibility for costs to repair or overhaul under the warranty provisions of the contract;

ii. The Technical Authority accepts full responsibility for repair and overhaul of item concerned; or

iii. The Contractor and the Technical Authority agree to share responsibility for the costs to repair or overhaul the unserviceable item, in such cases the PWGSC Contracting Authority will negotiate the best possible sharing arrangement.

b. In the event of a disagreement as in paragraph 5c, PWGSC will take necessary action with the Contractor while the Technical Authority informs its Senior Management including pertinent data and recommendations.

c. The total cost of processing warranty claims must include accommodation and travel costs of the Contractor's employees as well as equipment/system down time and operational constraints. Accordingly, the cost to remediate the defect, in manhours and material, will be discussed between the Contracting/Inspection Authorities and the Technical Authority to determine the best course of action.

5. Alongside Period For Warranty Repairs and Checks

a. If at all possible, an alongside period for the vessel is to be arranged just before the expiration of the 90 day warranty period. This alongside period is to provide time for warranty repair and check by the contractor.

b. In respect to the underwater paint, should it become defective during the associated warranty period the contractor is only liable to repair to a value determined as follows:
"Original cost to Canada for painting and preservation of the underwater section of the hull, divided by 365 days and multiplied by the number of days remaining in the 365 days warranty period. The resultant would represent the 'Dollar Credit' due to Canada from the Contractor."

c. The Underwater paint system, before expiration of the warranty, should be checked by divers. The Technical Authority is to arrange the inspection and ensure that a representative of the Contractor will attend. The Technical Authority will inform the Contracting Authority of any adverse results.

Travaux publics et Services gouvernementaux Canada

Public Works and Government Services Canada

Warranty Claim

Réclamation De Garantie

Vessel Name – Nom de navire	File No. – N° de dossier	Contract No. - N ° de contrat
Customer Department – Ministère client		Warranty Claim Serial No. Numéro de série de réclamation de garantie
Contractor – Entrepreneur		**Effect on Vessel Operations** **Effet sur des opérations de navire** Critical Degraded Operational Non-operational Critique Dégradé Opérationnel Non-opérationnel

1. Description of Complaint – Description de plainte

Contact Information – l'information de contact		
Name – Nom Tel. No. - N ° Tél	Signature – Signature	Date

2. Contractor's Investigative Report – Le rapport investigateur de l'entrepreneur

3. Contractor's Corrective Action – La modalité de reprise de l'entrepreneur

Contractor's Name and Signature – Nom et signature de l'entrepreneur

Date of Corrective Action - Date de modalité de reprise

Client Name and Signature - Nom et signature de client

Date

4. PWGSC Review of Warranty Claim Action – Examen d'action de réclamation de garantie par TPSGC

Signature – Signature

Date

ANNEX F

PROCEDURE FOR PROCESSING UNSCHEDULED WORK

1. Purpose

The Unscheduled Work Procedure has been instituted for the following purposes:

a. To establish a uniform method of dealing with requests for Unscheduled Work;

b. To obtain the necessary Technical Authority approval and Contracting Authority authorization before Unscheduled Work commences;

c. To provide a means of maintaining a record of Unscheduled Work requirements including Serial Numbers, dates, and accumulated cost. The Contractor shall have a cost accounting system that is capable of assigning job numbers for each Unscheduled Work requirement so that each requirement can be audited individually.

2. Definitions

a. An Unscheduled Work Procedure is a contractual procedure whereby changes to the scope of Work under the Contract may be defined, priced and contractually agreed to. Such changes may arise from;

i. "Work Arising" from opening up of machinery and/or surveys of equipment and material, or

ii. "New Work" not initially specified but required on the Vessel.

b. The procedure does not allow for the correction of deficiencies in the Contractor's Bid.

c. No unscheduled work may be undertaken by the Contractor without written authorization of the Contracting Authority except under emergency circumstances described in Sub. Paragraph 3(b). Unscheduled Work

d. Work undertaken without written Contracting Authority authorization will be considered the Contractor's responsibility and cost.

e. The appropriate PWGSC form is the final summary of the definition of the Unscheduled Work requirement, and the costs negotiated and agreed to.

3. Procedures

a. The procedure involves the electronic form PWGSC 1379 for refit and repair and will be the only form for authorizing all Unscheduled Work.

b. Emergency measures required to prevent loss or damage to the Vessel which would occur if this procedure were followed, shall be taken by the Contractor on its own authority. The responsibility for the cost of such measures shall be determined in accordance with the terms and conditions of the Contract.

c. The Technical Authority will initiate a work estimate request by defining the Unscheduled Work requirement. It will attach drawings, sketches, additional specifications, other clarifying details as appropriate, and allocate their Serial Number for the request.

d. Notwithstanding the foregoing, the Contractor may propose to the Technical Authority in writing, either by letter or some type of Defect Advice Form (this is the Contractor's own form) that certain Unscheduled Work should be carried out.

e. The Technical Authority will either reject or accept such Proposal, and advise the Contractor and Contracting Authority. Acceptance of the Proposal is not to be construed as authorization for the work to proceed. If required, the Technical Authority will then define the Unscheduled Work requirement in accordance with Sub. Paragraph 3.(c).

f. The Contractor will electronically submit its Proposal to the Contracting Authority together with all price support, any qualifications, remarks or other information requested.

The price support shall demonstrate the relationship between the scope of work, the Contractor's estimated costs and its selling price. It is a breakdown of the Contractor's unit rates, estimates of person hours by trade, estimate of material cost per item for both the contractor and all of its subcontractors including quotations, estimates of any related schedule impact and an evaluation of the contractor's time required to perform the Unscheduled Work.

g. The Contractor shall provide copies of purchase orders and paid invoices for Subcontracts and/or materials, including stocked items, in either case. The Contractor shall provide a minimum of two quotations for Subcontracts or materials. If other than the lowest, or sole source is being recommended for quality and/or delivery considerations, this shall be noted. On request to the Contractor, the Contracting Authority shall be permitted, to meet with any proposed Subcontractor or material supplier for discussion of the price and always with the Contractor's representative present.

h. After discussion between the Contracting Authority and the Contractor and if no negotiation is required, the Contracting Authority will seek Technical Authority confirmation to proceed by signing the form. The Contracting Authority will then sign and authorize the Unscheduled Work to proceed.

i. In the event the Technical Authority does not wish to proceed with the work, it will cancel the proposed Unscheduled Work through the Contracting Authority in writing.

j. In the event the negotiation involves a Credit, the appropriate PWGSC form will be noted as "credit" accordingly.

k. In the event that the Technical Authority requires Unscheduled Work of an urgent nature or an impasse has occurred in negotiations, the commencement of the Unscheduled Work should not be unduly delayed and should be processed as follows, in either case. The Contractor will complete the appropriate PWGSC 1379 form indicating the offered cost and pass it to the Contracting Authority. If the Technical Authority wishes to proceed, the Technical Authority and the Contracting Authority will sign the completed PWGSC form with the notation, "CEILING PRICE SUBJECT TO DOWNWARD ADJUSTMENT", and allocate a Serial Number having the suffix "A". The work will proceed with the understanding that following an audit of the Contractor's actual costs for completing the described work, the cost will be finalized at the ceiling price or lower, if justified by the audit. A new PWGSC form will then be completed with the finalized costs, signed and issued with the same Serial Number without the suffix "A", and bearing a notation that this form is replacing and canceling the form having the same Serial Number with the suffix "A".

NOTE: PWGSC forms bearing Serial Numbers with a suffix "A" shall not to be included in any contract amendments, and therefore no payment shall be made until final resolution of the price and incorporation into the contract.

4. Amendment to Contract or Formal Agreement

The Contract will be amended from time to time in accordance with the Contract terms to incorporate the costs authorized on the appropriate PWGSC forms.

ANNEX G

QUALITY CONTROL/INSPECTION

G1 Quality Control Plan

The Contractor must implement and follow the Quality Control Plan (QCP) prepared according to the latest issue (at contract date) of ISO 10005:2005 quality management - Guidelines for quality plans, approved by the Inspection and the Technical Authority. The QCP must describe how the Contractor will conform to the specified quality requirements of the Contract and specify how the required quality activities are to be carried out, including quality assurance of subcontractors. The Contractor must include a traceability matrix from the elements of the specified quality requirements to the corresponding paragraphs in the QCP. The QCP must be made available to the Inspection and Technical Authority for review and approval **within five (5) calendar** days after contract award.

The documents referenced in the QCP must be made available within two (2) Working Days when requested by the Inspection Authority.
The Contractor must make appropriate amendments to the QCP throughout the term of the Contract to reflect current and planned quality activities. Amendments to the QCP must be acceptable to the Inspection Authority and the Technical Authority.

G2 Inspection and Test Plan (ITP):

1. The Contractor must prepare an Inspection and Test Plan (ITP) comprising individual inspection and test plans for each specification item of this project, in accordance with the Quality Standard and its Quality Control Plan. The ITP must be submitted to the Inspection Authority for review and amended by the Contractor to the satisfaction of the Inspection Authority.
a. Each ITP must contain all inspection points identified in the Specification highlighting any mandatory points that must be witnessed by the Inspection Authority and other "hold" points imposed by the Contractor to ensure the quality of the work.
b. Milestone delivery date for the ITP is given in the Contract, however individual ITPs should be forwarded for review as developed.

2. Coding:
a. Each Inspection and Test Plan (ITP) is to be coded for identification clearly demonstrating a systematic approach similar to the following (Contractor's system should be defined in its Quality Control Plan):
i. Prefixes for Inspections, Test and Trials:
- Prefix "1" is a Contractor inspection, i.e. 1H-10-01, 1H-10-02;
- prefix "2" is a Contractor post repair test, i.e. 2H-10-01; and
- prefix "3" is a Contractor post repair trial, i.e. 3H-10-01.

b. Specification items followed by assigned sequence numbers for inspection processes within each Specification Item; and
c. Cross reference to a verification document number

G3 Inspection and Test Plan Criteria:

Inspection criteria, procedures and requirements are stated in the specifications, drawings, technical orders and reference standards invoked by the Specifications. Test and trial documentation may also be included or referenced in the Specifications. An individual Inspection and Test Plan (ITP) is required for each Specification item.

a. All ITPs must be prepared by the Contractor in accordance with the above criteria, its Quality Plan, and must provide the following reference information:

i. the ship's name;
ii. the Specification item number;
iii. equipment/system description and a statement defining the parameter which is being inspected;
iv. a list of applicable documents referenced or specified in the inspection procedure;
v. the inspection, test or trial requirements specified in the Specification;
vi. the tools and equipment required to accomplish the inspection;
vii. the environmental conditions under which the inspections are to be conducted and the tolerances on the inspection conditions;
viii. a detailed step-by step procedure of how each inspection is to be performed, conformance parameters, accept/reject criteria and recording of results, deficiencies found and description of corrective action(s) required;
ix. name and signature of the person who prepared the plan, date prepared and amendment level; and,
x. names and signatures of the persons conducting and witnessing the inspection, test or trial.

4. Contractor Imposed Testing:

Tests and trials in addition to those given in the Specification must be approved by the Inspection Authority.

a. Amendments: Amendment action for the Inspection and Test Plans must be ongoing throughout the refit and reflect the inspection requirements for unscheduled work. Amendments must be submitted as developed, but not less frequently than once every second week.

G4 Conduct of Inspection

1. Inspections must be conducted in accordance with the ITP and as detailed in G4.

2. The Contractor must provide its own staff or subcontracted staff to conduct inspections, tests and trials; excepting that Technical Authority or Inspection Authority personnel may be designated in the specifications, in which case the Contractor must ensure that its own staff are provided in support of such inspection/test/trial.

3. The Contractor must ensure that the required conditions stated in the ITP prevail at the commencement of, and for the duration of, each inspection/test/trial.

4. The Contractor must ensure that personnel required for equipment operation and records taking during the inspection/test/trial are briefed and available at the start and throughout the duration of the inspection/test/trial. Tradesmen or FSRs who may be required to effect minor changes or adjustments in the installation must be available at short notice.

5. The Contractor is to coordinate the activities of all personnel taking part in each inspection/test/trial and ensure that safe conditions prevail throughout the inspection/test/trial.

G5 Inspection Records and Reports

1. The Contractor on the inspection record, test or trials sheets as applicable must record the results of each inspection. The Contractor must maintain files of completed inspection records consistent with the Quality Standard and its Quality Plan for this project.

2. The Contractor's QC representative (and the FSR when required) must sign as having witnessed the inspection, test or trial on the inspection record. The Contractor must forward originals of completed inspection records, together with completed test(s) and/or trials sheets to the Inspection Authority as they are completed.

3. Unsatisfactory inspection/test/trial results, for which corrective action cannot be completed during the normal course of the inspection/test/trial, will require the Contractor to establish and record the cause of the unsatisfactory condition to the satisfaction of the Inspection Authority. Canada representatives may assist in identification where appropriate.

4. Corrective action to remove cause of unsatisfactory inspections must be submitted to the Inspection Authority in writing by the Contractor, for approval before affecting such repairs and rescheduling of the unsatisfactory inspection/test/trial. Such notices must be included in the final records passed to the Inspection Authority.

5. The Contractor must undertake rectification of defects and deficiencies in the Contractor's installation or repair as soon as practicable. The Contractor is responsible to schedule such repairs at its own risk.

6. The Contractor must reschedule unsatisfactory inspections after any required repairs have been completed.

7. Quality Control, Inspection and Test records that substantiate conformance to the specified requirements, including records of corrective actions, must be retained by the Contractor for three (3) years from the date of completion or termination of the Contract and must be made available to the Inspection Authority upon request.

G6 Inspection and Trials Process

1. Drawings and Purchase Orders

a. Upon receipt of two (2) copies of each drawing or purchase order, the designated Inspection Authority will review its content against the provisions of the specification. Where discrepancies are noted, the Inspection Authority will formally advise all concerned, in writing using a Discrepancy Notice. The resolution of any such discrepancy is a matter for consultation between the Contractor and other Crown Authorities.

The Inspection Authority is NOT responsible for the resolution of discrepancies.

2. Inspection

a. Upon receipt and acceptance of the Contractor’s ITP, inspection will consist of a number of Inspection Points supplemented by such other inspections, tests, demonstrations and trials as may be deemed necessary by the Inspection Authority to permit him to certify that the work has been performed in compliance with the provisions of the specification. The Contractor must be responsible for notifying the designated Inspection Authority of when the work will be available for inspection, sufficiently in advance to permit the designated Inspection Authority to arrange for the appropriate inspection.

b. The Inspection Authority will inspect the materials, equipment and work throughout the project against the provisions of the specification and, where non-conformances are noted, will issue appropriate **INSPECTION NON-CONFORMANCE REPORTS.**

c. The Contract requires the implementation of a Quality Assurance/Quality Control system, so the Inspection authority must require that the Contractor provide a copy of its internal inspection report pertaining to a work item before conducting the requested inspection. If third party inspections are required by the Contract (e.g. inspections by a certified CWB 178.2 welding inspector), the reports of these inspections must be required before the Work is inspected by the PWGSC Inspection Authority.

d. The QA/QC system is a requirement, so if the documentation is presented to the Inspection Authority before an inspection stating that the Work is satisfactory but the Inspection Authority finds that the Work has not been satisfactorily inspected, the Inspection Authority must issue an Inspection Non-conformance Report against the Work and another against the failure of the Contractor's QA/QC system.

e. Before carrying out any inspection, the PWGSC Inspection Authority must review the requirements for the Work and the acceptance and/or rejection standards to be applied. Where more than one standard or requirement is called up and they are potentially conflicting, the Inspection Authority must refer to the order of precedence in the Contract to determine the standard or requirement to be applied.

3. Inspection Non-conformance report

a. An Inspection Non-conformance report will be issued for each non-conformance noted by the Inspection Authority. Each report will be uniquely numbered for reference purposes, will be signed and dated by the Inspection Authority, and will describe the non-conformance.

b. When the non-conformance has been corrected by the Contractor and has been re-inspected and accepted by the Inspection Authority, the Inspection Authority will complete the Report by adding an applicable signed and dated notation.

c. At the end of the project, the content of all Inspection Non-conformance Reports which have not been signed-off by the Inspection Authority will be transferred to the Acceptance Documents before the Inspection Authority's certification of such documents.

4. Tests, Trials, and Demonstrations

a. To enable the Inspection Authority to certify that the Work has been performed satisfactorily, in accordance with the Contract and Specifications, the Contractor must schedule, co-ordinate, perform, and record all specified Tests, Trials and Demonstrations required by the Inspection Authority.

b. Where the Specifications contain a specific performance requirement for any component, equipment, sub-system or system, the Contractor must test such component, equipment, sub-system or system to the satisfaction of the Inspection Authority, to prove that the specified performance has been achieved and that the component, equipment, sub-system or system performs as required by the specifications.

c. Tests, trials and demonstrations must be conducted in accordance with a logical, systematic schedule which must ensure that all associated components and equipment are proven before sub-systems demonstration or testing, and that sub-systems are proven before system demonstration or testing.

d. Where the Specifications do not contain specific performance requirements for any component, equipment, sub-system or system, the Contractor must demonstrate such component, equipment, sub-system or system to the satisfaction of the Inspection Authority .

e. The Contractor must submit its Inspection and Test Plan as detailed in G2.

f. The Contractor must co-ordinate each test, trial and demonstration with all interested parties, including the Inspection Authority; Contracting and Technical Authorities; regulatory authorities; Classification Society; Sub-contractors; etc. **The Contractor must provide the Inspection Authority and other Crown Authorities with a minimum of five (5) Working Days notice of each scheduled test, trial, or demonstration.**

g. The Contractor must keep written records of all tests, trials, and demonstrations conducted as detailed in G5. The Contractor may utilize the **PWGSC STANDARD TESTS & TRIALS RECORD SHEETS** which can be customized by the Contractor to suit individual test or trial requirements. These Record Sheets are available from the Inspection Authority in digital format.

h. The Contractor must in all respects be responsible for the conduct of all tests and trials in accordance with the requirements of the Contract.

i. The Inspection Authority and the Technical Authority reserve the right to defer starting or continuing with any sea trials for any reasonable cause including but not limited to adverse weather, visibility, equipment failure or degradation, lack of qualified personnel and inadequate compliance with safety standards.

ANNEX H

Financial Bid Presentation Sheet

H1 Price for Evaluation

H1 **A)**	**Known Work** For work as stated in Part 1 Clause 1.2 (a), Specified in Annex "A" and detailed in the attached Cumulative Pricing Data Sheets Appendix 2 of Annex "H", for a FIRM PRICE of: - Equal to $16,100,000.00 up to $17,000,000.00 without exceeding. - Less than $16,100,000.00 only if all 82 items are priced with associated maximum of 820 points.	**$**_____
B)	**B1**. Unscheduled Work Contractor Labour Cost:Estimated labour hours at a firm Charge-out Labour Rate, including overhead and profit for evaluation purpose only: 5,000 person hours X $_____ per hour for a PRICE of: See Article H2.1 and H2.2 below. **B2.** Overtime premium for time and one half: Estimated hours for evaluation purposes only: 500 person hours X $ _____ per hour for a PRICE of: See Article H3 Below. **B3.** Overtime premium for double time: Estimated hours for evaluation purposes only: 300 person hours X $_____per hour for a PRICE of: See Article H3 below. *Note: Overtime Premium represents the difference between the applicable overtime rate at H3 a) and H3 b) and the charge out rate quoted at H1 B1* * Regular time is defined as an 8 hour work day ** Overtime B2 is defined as time in excess of the regular time,. *** Overtime B3 is defined as Sundays and Statutory Holidays.	**$**_____ **$**_____ **$**_____
C)	Daily Service Fees for evaluation purpose only As per Clause H4 i) Ten (10) working days X $_____ firm daily service fee =$_____ ii) Four (4) non-working days X $____ firm daily service fee =$_____	**$**_____ **$**_____
D)	Vessel Transfer Cost as Per Clause H7	**$**_____

	Proposed shipyard/ship repair facility: _____	
E)	**Cost of Financial Security as per 6.2**	**$_____**
F)	CUMULATIVE POINTS (detailed in the attached Cumulative **Pricing** Data Sheets Appendix 2 of Annex "H",)	
G)	EVALUATION PRICE Applicable Taxes Excluded, [A + B + C+ D + E]: For an EVALUATION PRICE of (Applicable Taxes excluded):	**$**
H)	Price Per Point = (G) / (F) **Lowest price per point will be awarded the Contract.**	**$_____/Point**

H2 Unscheduled Work

The Contractor will be paid for unscheduled work arising, as authorized by Canada. The authorized unscheduled work will be calculated as follows:

"Number of hours (to be negotiated) X $_____, being the Contractor's firm hourly charge-out labour rate which includes overhead, consumables, and profit, plus net laid-down cost of materials to which will be added a mark-up of 10 percent, plus Applicable Taxes, if applicable, of the total cost of material and labour. This rate shall be a blended rate for all classes of labor, engineering and foreperson. The firm hourly charge-out labour rate and the material mark-up will remain firm for the duration of the Contract and any subsequent amendments."

H2.1: Notwithstanding definitions or usage elsewhere in this document, or in the Contractor's Cost Management System, when negotiating Hours for unscheduled work, PWGSC will consider only those hours of labour directly involved in the production of the subject work package.

Elements of Related Labour Costs identified in H2.2 below, will not be negotiated, but will be compensated for in accordance with Note H2.2. It is therefore incumbent upon the bidder to have bid appropriately which will result in fair compensation, regardless of their Cost Management System.

H2.2: Allowance for Related Labour Costs such as: Management, all Supervision, Purchasing and Material Handling, Quality Assurance and Reporting, First Aid, Gas Free Certification Inspecting and Reporting, and Estimating and preparing unscheduled work Submissions will be included as Overhead for the purposes of determining the Charge-out Labour Rate entered in line H2 above.

H2.3: The 10% mark-up rate for materials will also apply to subcontracted costs. The mark-up rate includes any allowance for material and subcontract management not allowed for in the Chargeout Labour Rate. The Contractor will not be entitled to a separate labour component for the purchase and handling of materials or subcontract administration.

Pro-rated Prices Unscheduled Work

Hours and prices for unscheduled work shall be based on comparable historical data applicable to similar work at the same facility, or shall be determined by pro-rating the quoted Work costs in the Contract when in similar areas of the vessel.

H3 Overtime

The Contractor must not perform any overtime under the Contract unless authorized in advance and in writing by the Contracting Authority. There will be no overtime payment for Known Work. Any request for payment must be accompanied by a copy of the overtime authorization and a report containing the overtime performed pursuant to the written authorization. Overtime shall not be paid unless authorized in writing by the Contracting Authority.

Payment for authorized overtime will be calculated as follows:

a) Time and One-Half Rate: $ _____/ per person hour
b) Double Time Rate: $ _____/ per person hour

This rate shall be a blended rate for all classes of labor, engineering and foreperson and shall include all overheads, supervision and profit.

These rates will remain firm for the duration of the Contract, including all amendments and are subject to audit if considered necessary by Canada.

* Regular time is defined as an 8 hour work day

** Overtime Time and One-Half Rate is defined as time in excess of the regular time,.

*** Overtime Double Time Rate is defined as Sundays and Statutory Holidays Pro-rated Prices

H4 Daily Services Fee

In the event of a delay in the performance of the Work, and if such delay is recognized and agreed upon by the Contracting Authority as being attributable to Canada, Canada agrees to pay the Contractor the daily services fee, described below, for each day of such delay. This fee shall be the sole liability of Canada to the Contractor for the delay.

The firm daily services fee is:

(a) For a working day: $_____

(b) For a non-working day: $_____

The above fees shall include but not be limited to, all aspects of the following costs: Project Management Services, Administrative Support, Production Services, Quality Assurance, Material Support, Planned Maintenance and Ship Services, and all other resources and direct costs needed to maintain the Vessel at the Contractor's facility. These fees are firm and not subject to any additional charges for mark-up or profit.

H5 Vessel, Refit, Repair or Docking Cost

The following costs must be included in the price:

1. Ship Services: include all costs for ship services such as water, steam, electricity, etc., required for vessel maintenance for the duration of the Contract.

2. Docking and Undocking include:

(a) all costs resulting from drydocking, wharfage, security, shoring, shifting and/or moving of the vessel within the successful Bidder's facility;

(b) the cost of services to tie up the vessel alongside and to cast off.

Unless specified otherwise, the vessel will be delivered by Canada to the successful Bidder's facility alongside a mutually agreed safe transfer point, afloat and upright, and the successful Bidder will do the same when the Work is completed. The cost of services to tie up the vessel alongside and to cast off must be included in the evaluation price.

3. Field Service Representatives/Supervisory Services: include all costs for field service representatives/supervisory services including manufacturers' representatives, engineers, etc.

These services must not be an extra charge except where unscheduled work requiring these services is added to the Contract.

4. Removals: include all costs for removals necessary to carry out the Work and will be the responsibility of the successful Bidder whether or not they are identified in the specifications, except those removals not apparent when viewing the vessel or examining the drawings. The successful Bidder will also be responsible for safe storage of removed items and reinstalling them on completion of the Work. The successful Bidder will be responsible for renewal of components damaged during removal.

5. Sheltering, Staging, Cranage and Transportation: include the cost of all sheltering, staging including handrails, cranage and transportation to carry out the Work as specified.

The successful Bidder will be responsible for the cost of any necessary modification of these facilities to meet applicable safety regulations.

H6 Vessel Transfer Costs

1. The evaluation price must include the cost for transferring the vessel from its home port to the shipyard/ship repair facility where the Work will be performed and the cost of transferring the vessel to its home port following completion of the Work, in accordance with the following:

(a) The Bidder must provide the location of the shipyard/ship repair facility where it proposes to perform the Work together with the applicable vessel transfer cost from the list provided under paragraph 2 of this clause shall be entered into Table H1:

(b) If the list in paragraph 2 of this clause does not provide the shipyard/ship repair location where the Bidder intends to perform the Work, then the Bidder must advise the Contracting Authority, in writing, at least 5 calendar days before the bid closing date, of its proposed location for performing the Work. The Contracting Authority will confirm to the Bidder, in writing, at least 3 calendar days before the bid closing date, the location of the shipyard/ship repair and the applicable vessel transfer cost.

A bid that specifies a location for executing the Work which is not on the list of paragraph 2 of this clause, and for which a notification in writing has not been received by the Contracting Authority as required above, will be considered non-responsive.

2. List of shipyard/ship repair facilities and applicable vessel transfer costs

Vessel: CCGS Henry Larsen
Home port: St. John’s, NL

Transfer costs in the case of vessels transferred using a government delivery crew include the fuel cost at the vessel's most economical speed of transit and for unmanned refits only, crew transportation costs for the delivery crew based on the location of the vessel's home port and the shipyard/ship repair facility. Crew transportation costs do not include any members of the delivery crew who remain at the shipyard/ship repair facility in order to discharge project responsibilities related to the vessel being transferred.

Transfer costs in the case of vessels transferred unmanned by either commercial towing, railway, highway or other suitable means of transportation must be:

(i) included as part of the Bidder's financial bid in the case where the Bidder is responsible for the transfer; or

(iii) identified as the applicable vessel transfer cost, as given in the list below, in the case when Canada is responsible for the transfer.

Shipyard/ship repair facility **Applicable vessel transfer cost**

Company	City	Transfer Cost Manned
Group Verreault Navigation Inc.	Les Méchins, Québec	C$50,274.00
Davie	Lévis, Québec	C$45,391.00
New Dock St John's Dockyard Limited	St. John's, Newfoundland	C$0.00
Irving Shipbuilding Inc.,	Halifax, Nova Scotia	C$28,957.00
Pictou Shipyard	Pictou, Nova Scotia	C$27,177.00
Heddle Marine Service Inc.	Hamilton, Ontario	C$64,771.00

ANNEX H - APPENDIX 1

PRICING DATA SHEETS
(to form part of Annex B of the Resulting Contract)

Note: Bidders not required to fill out greyed out Sections

COMPANY NAME:

Item	Spec. #	Description	Total Hours	Total Labour Cost	Total Material Cost	Total FSR & Sub-Cont'rs Cost	Unit Cost	Total Firm Price
1	1.1 - 1.3	Intro/General/Scope	hrs	$	$	$		
	1.4	Technical Data Package	hrs	$	$	$		
	1.5	Office and Prgress Meetings	hrs	$	$	$		
	1.6	Facilities	hrs	$	$	$		
	1.7	Storage Space	hrs	$	$	$		
	1.8	Fess and Costs	hrs	$	$	$		
	1.9-1.12	Q/A-Spare Parts	hrs	$	$	$		
	1.13	Project Management	hrs	$	$	$		
	1-1.13	**Total Spec 1 Requirement**	hrs	$	$	$		$
2	2.1-2.9	General Technical						$
3	3.0-3.10	Mechanical						$
4	4.0-4.14	Electrical and Electronic						$
5	5.0-5.5	Electro-Magnetic Interference						$
6	6.1	Drawings	hrs	$	$	$		
	6.2	Manuals and Records	hrs	$	$	$		
	6.0 - 6.2	**Total Spec 6 Requirement**	hrs	$	$	$		$

7	7-7.3	Test, Dock Trials	hrs	$	$	$		$
8	8.1	Berthing and Mooring	hrs	$	$	$		
	8.2	Services	hrs	$	$	$		
		Potable water	hrs	$	$	$	$ /m3	
		Non-Potable Water	hrs	$	$	$	$ /m3	
		Sewage Connection	hrs	$	$	$		
		Garbage renewal	hrs	$	$	$		
		Oily Bilge Water	hrs	$	$	$	$ /liter	
		Protective Floor Covering (5615 sq ft)	hrs	$	$	$	$ /m2	
		Crane(20 ton)	300.00	$	$	$		
		Electrical Shore Power	8,000.00	$	$	$	$ kw/h	
	8.3	Docking	hrs	$	$	$		
	8.4	Undocking	hrs	$	$	$		
	8.5	Vessel Security	hrs	$	$	$		
	8.0 - 8.5	**Total Spec 8 Requirement**	hrs	$	$	$		$
9	**16.0 - 16.5**	**Asbestos Removal and Re-Insulation**	hrs	$	$	$		$
10	**27**	**Internal Lighting removal**						
	27.3.2	4 foot bulbs					$ /bulb	
	27.3.2	2 foot bulbs					$ /bulb	
	27.0-27.5	**Total Spec 27 Requirement**	hrs					
11	12.0 - 12.4	**Discharge Sea bay Repair**	hrs					

12	**14**	**ICCP System Renewal**						
	14.3.1	FSR				$		
	14.3.2	ICCP Anodes (4)	hrs	$	$	$	$ /anode	
	14.3.2	Refernce Electrodes (2)	hrs	$	$	$		
	14.3.5	ICCP control panel	hrs	$	$	$		
	14.3.7	Shaft Grounding gears(2)	hrs	$	$	$		
	14.3.11	Zinc Anodes (20)	hrs	$	$	$	$ / anode	
	14.0-14.5	**Total Spec 14 Requirement**	hrs	$	$	$		$
13	**20**	**Pipework Anti- Fouling System Renewal**						
	20.3.1	FSR	hrs			$		
	20.3.2	Cable (300m)					$ /m	
	20.3.3	Anodes (20)					$ /Anode	
	20.3.6	20w MGPS panel	hrs	$	$	$		
	20.0-20.5	**Total Spec 20 Requirement**	hrs	$	$	$		$
14	**13.0-13.5**	**Bubbler Piping Renewal**	hrs	$	$	$		$
15	**15**	**Hull Coatings**						
	15.3.8	Blast bare steel					$ / m2	
	15.3.18	Painting					$ /m2	
	15.0-15.5	**Total Spec 15 Requirement**	hrs	$	$	$		$
16	**34**	**Intering System Tank Coating**						
	34.3.6	Blasting					$/ m2	
	34.3.6	Coating					$/ m2	

	34.3.7	Fwd Stability Tank	hrs	$	$	$		
	34.3.8	Aft Stability Tank	hrs	$	$	$		
	34.3.9	Fwd Heeling Tank	hrs	$	$	$		
	34.3.10	Aft heeling Tank	hrs	$	$	$		
	34.0-34.5	**Total Spec 34 Requirement**	hrs	$	$	$		$
17	**36**	**Void Space Coatings**						
	36.3.6	Blasting					$/m2	
	36.3.6	Coating					$/m2	
	36.3.7	#4 Void port and stbd	hrs	$	$	$		
	36.3.8	#3 Void port and stbd	hrs	$	$	$		
	36.3.9	#2 Void port and stbd	hrs	$	$	$		
	36.3.10	#1 Void port and stbd	hrs	$	$	$		
	36.3.11	Fwd Cofferdam	hrs	$	$	$		
	36.3.12	Aft Cofferdam	hrs	$	$	$		
	36.3.13	Pipe Tunnel	hrs	$	$	$		
	36.0 - 36.5	Total Void Space Coatings	hrs	$	$	$		$
18	**28.0 - 28.5**	**Helicopter Hanger Refurbishment**	hrs	$	$	$40,000.00		$
19	**29**	**Helicopter Workshop Steel repair**						
	29.3.11 a	Dex O Tex Amerlock 2 Epoxy			$			
	29.3.11 b	Dex O Tex Decklite A60 Fire rated underlayment			$			
	29.3.11 c	Dex O Tex VLW Epoxy Underlayment top coat			$			

	29.0 - 29.5	**Total Spec 29**	hrs	$	$	$		$
20	**30**	Flight Deck Steelwork Repair	hrs					
21	19	Alarm, Monitoring, Pwr Management & ME Safety Systems						
	19.5.2	Spares			$			
	19.0 - 19.5	**Total Spec 19**	hrs	$	$	$		$
22	**24**	**Internal Communication System**						
	24.3.15	FSR				$		
	24.3.40	unit cost for Rotex frame, modules & wedge					$ /Rotex kit	
	24.3.41	Optic Fiber Cable					$ /10m	
	24.3.42	Cat 5e cable					$ /10m	
	24.3.48	Stainless steel clips					$ /steel clip	
	24.3.55	10/4 AWG Marine cable					$ /10m	
	24.3.56	12/3AWG Marine cable					$ /10m	
	24.3.60	14/3 AWG Marine cable					$ /10m	
	24.0 - 24.5	**Total Spec 24**	hrs	$	$	$		$
23	**9.0 - 9.5**	**Docking Plugs**	hrs	$	$	$		$
24	**10.0 10.5**	**Hull Butts & Seams**	hrs	$	$	$		$
25	**11**	**Sea Bay, Sea Chest & Cofferdam**						
	11.3.9	Steel Screws					$ /screw	

	11.0 - 11.5	Total Spec 11	hrs	$	$	$	$	$
26	78	Anhors and Chains						
	78.3.5	Repair slack studs	hrs	$	$	$	$	
	78.3.5	Stud repair					$ /stud	
	78.0 - 78.5	**Total Spec 78**	hrs	$	$	$		$
27	**72**	**Starbaord Shaft Survey**						
	72.3.12	FSR				10,000.00		
	72.0 - 72.5	**Total spec 72**	hrs	$	$	$		$
28	**73**	**Starboard Stern Seal**						
	73.3.1	FSR				$		
	73.0 - 73.5	**Total Spec 73**	hrs	$	$	$	$	$
29	**74.0 - 74.5**	**Tailshaft Weardown**	hrs					
30	**35**	**Ballast Tank Coatings**						
	35.3.6	Sand blasting					$ /m2	
	35.3.6	Coating					$ /m2	
	35.3.9	Blast Cleaning Forepeak Tank	hrs	$	$	$		$
	35.3.10	Blast Cleaning Forepeak Tank	hrs	$	$	$		$
	35.3.12	Blast Cleaning Forward Trim Tank	hrs	$	$	$		$
	35.3.14	Blast Cleaning Aft Trim Tank	hrs	$	$	$		$
	35.3.16	Blast Cleaning Aft Peak Tank	hrs	$	$	$		$
	35.0 - 35.5	**Spec 35 Total Ballast Tank Coatings**	hrs	$	$	$		$
31	37.0 - 37.5	Chain Locker Coatings	hrs	$	$	$		$

32	60.0 - 60.5	Relief Valve Certification	hrs	$	$	$		$
33	70.0 - 70.5	Megger Testing	hrs	$	$	$		$
34	75.0 - 75.5	Thermal Scan	hrs	$	$	$		$
35	59.0 - 59.5	Liferaft Servicing	hrs	$	$	$		$
36	71.0 - 71.5	Portable Fire Extinguishers	hrs	$	$	$		$
37	61	FM200 and CO2 systems						
	61.1.3	FSR				$		
	61.0 - 61.5	**Total Spec 61 Requirement**	hrs	$	$	$		$
38	62.0 - 62.5	Fire detection Systems	hrs	$	$	$		$
39	67.0 - 67.5	Helicopter Fuel System Servicing	hrs	$	$	$		$
40	38	Potable Water Tanks						
	38.3.3	Water removal					$ /m3	
	38.3.9	Power tool cleaning					$ /m2	
	38.0 - 38.5	**Total Spec 38 requirement**	hrs	$	$	$		$
41	66.0 - 66.5	Galley Rangehood and Exhaust Trunk Cleaning	hrs	$	$	$		$
42	77.0 - 77.5	Accomodation Laundry dryer Exhaust Duct Cleaning	hrs	$	$	$		$
43	76.0 - 76.5	Accomodation Duct Cleaning	hrs	$	$	$		$
44	69.0 - 69.5	MCR Flooring repairs	hrs	$	$	$		$
45	65	FPE Vacumn Contactors						
	65.3.1	FSR				$		
	65.0 - 65.5	FPE Vacumn Contactors	hrs	$	$	$		$

46	52	Speed Log renewal						
	52.3.13	Supply and Install of cable					$ /m3	
	52.4.2.1	FSR				$		
	52.0-52.5	**Total Spec 52 Requirement**		$	$	$	$	$
47	53	CCTV Installation						
	53.3.11	Bosch MIC Cable					$ /m	
	53.3.11	Cat5e cables					$ /m	
	53.3.11	RG- 06 Cable					$ /m	
	53.0 - 53.5	Total Spec 53 Requirement	hrs					
48	56	Master Clock						
	56.3.7	Cable Removal					$ /m	
	56.3.14	Supply /Install Cable Cat 5e					$ /m	
	56.0 - 56.5	Total Spec 56 Requirement	hrs	$	$	$	$	$
49	17	General Piping System replacement						
	17.3.3.3	Fire main System: A one (1) metre section of straight Victaulic pipe					$ /unit	
	17.3.3.3	Fire main System: A one (1) metre section of straight welded pipe including flanges					$ /unit	
	17.3.3.3	Fire main System: One (1) Victaulic T-Piece 125 mm OD					$ /unit	
	17.3.3.3	Fire main System: One (1) Victaulic 90 degree 125 mm OD					$ /unit	
	17.3.4.4	Fire main System: A one (1) metre section of straight Victaulic pipe					$ /unit	
	17.3.4.4	A one (1) metre section of straight welded pipe including flanges					$ /unit	

	17.3.4.4	One (1) Victaulic T-Piece 125 mm OD					$ /unit	
	17.3.4.4	One (1) Victaulic 90 degree 125 mm OD					$ /unit	
	17.3.5.4	Black Water System: A one (1) metre section of straight Victaulic pipe					$ /unit	
	17.3.5.4	Black Water System: A one (1) metre section of straight welded pipe including flanges					$ /unit	
	17.3.5.4	Black Water System: One (1) Victaulic T-Piece 125 mm OD					$ /unit	
	17.3.5.4	Black Water System: One (1) Victaulic 90 degree 125 mm OD					$ /unit	
	17.3.6.3	Grey Water System: A one (1) metre section of straight Victaulic pipe					$ /unit	
	17.3.6.3	Grey Water System: A one (1) metre section of straight welded pipe including flanges					$ /unit	
	17.3.6.3	Grey Water System: One (1) Victaulic T-Piece 125 mm OD					$ /unit	
	17.3.6.3	Grey Water System: One (1) Victaulic 90 degree 125 mm OD					$ /unit	
	17.3.7.8	Vents and Sounding System: A one (1) metre section of straight Victaulic pipe					$ /unit	
	17.3.7.8	Vents and Sounding System:A one (1) metre section of straight welded pipe including flanges					$ /unit	
	17.3.7.8	Vents and Sounding System:One (1) Victaulic T-Piece 125 mm OD					$ /unit	
	17.3.7.8	Vents and Sounding System:One (1) Victaulic 90 degree 125 mm OD					$ /unit	
	17.0 - 17.6	**Total Spec 17 Requirement**	hrs	$	$	$		$

50	18.0 - 18.5	Grey Water Deck Drains and Anti-Syphonic Vlaves	hrs					
51	43.0 - 43.5	Shower stall renewals	hrs					
52	47.0 - 47.5	Galley Equipment Renewal	hrs					
53	48.0 - 48.5	Temporary Acces to Galley	hrs					
54	49	Galley Equipment Renewal						
	49.3.2	Galley Equipment			$			
	49.3.14	Stainless Steel cover sections	hrs	$	$	$		
	49.0 - 49.5	**Total Spec 49 Requirement**	hrs	$	$	$		$
55	50.0 - 50.5	Galley Deckhead Panel Renewal	hrs					
56	21	Intering System renewal						
	21.3.1	FSR	hrs			$35,000.00		
	21.0 - 21.5	**Total Spec 21 Requirement**	hrs	$	$	$		$
57	22	Steering Gear Control						
	22.1.1	FSR	hrs			$		
	22.0 - 22.5	**Total Spec 22 Requirement**	hrs	$	$	$		$
58	68	Inverter replacement						
	68.3	FSR	hrs			$		
	68.0 - 68.5	**Total Spec 68 Requirement**	hrs	$	$	$		$
59	79	Battery Charger repalcements						
	79.3	FSR	hrs			$		
	79.0 - 79.5	**Total Spec 79 Requirement**	hrs	$	$	$		
60	44	P & S Searchlight						

	44.3.15	600/220 Volt, single phase enclosed transformer			$			
	44.0 - 44.5	**Total Spec 44 Requirement**	hrs	$	$	$		$
61	45.0 - 45.5	Aft Serchlight Replacement	hrs	$	$	$		$
62	46	Centre Searchlight Renewal						
	46.5.3.1	FSR	hrs			$		
	46.0 - 46.5	**Total Spec 46 Requirement**	hrs	$	$	$		$
63	32	Exhaut Repair Uptakes						
	32.3.8	Insulation Reapirs					$ /m2	
	32.0 - 32.5	Total Spec 32 requirement	hrs	$	$	$		$
64	42.0 - 42.5	Escape Hatches	hrs	$	$	$		$
65	33.0 - 33.5	Exterior Doors	hrs	$	$	$		$
66	25.0 - 25.5	Sidelight Replacement	hrs	$	$	$		$
67	63.0 - 63.5	Navigation Lights	hrs	$	$	$		$
68	39	Mast Coatings						
	39.3.4	Ultra High Pressure Blasting					$ /m2	
	39.3.4	Grit Blasting					$ /m2	
	39.3.4	Power Tooling					$ /m2	
	39.3.8	Forward Mast: Amerlock 400 Grey					$ /m2	
	39.3.10	Forward Mast: Amerlock400 Yellow					$ /m2	
	39.3.12	Forward Mast: Matchless 732 Dorry Buff					$ /m2	
	39.3.24	Aft Mast: Amerlock 400 Grey					$ /m2	

	39.3.24	Aft Mast: Amerlock 400 Black					$ /m2	
	39.3.24	Aft Mast: Amerlock400 Yellow					$ /m2	
	39.3.24	AftMast: Matchless 32 Dorry Buff					$ /m2	
	39.00 - 39.5	**Total Spec 39 Requirement**	hrs	$	$	$		$
69	80	Main Deck Covering Renewals						
	80.3.10	Repair Dex-O-Tex					$ /m2	
	80.3.10	Repair Decklite					$ /m2	
	80.5.2	Spares			$			
	80.0 - 80.5	**Total Spec 80 Requirement**	hrs	$	$	$		$
70	81	Deck Covering Renewals: Upper and Boat Deck						
	81.3.9	Repair Dex-O-Tex					$ /m2	
	81.3.9	Repair Decklite					$ /m2	
	80.5.2	Spares			$			
	81.0 - 81.5	**Total Spec 81 Requirement**	hrs	$	$	$		$
71	82	Deck Covering Renewals: Bridge and Officers Deck						
	82.3.9	Repair Dex-O-Tex					$ /m2	
	82.3.9	Repair Decklite					$ /m2	
	82.5.2	Spares			$			
	82.0 - 82.5	**Total Spec 82 Requirement**	hrs	$	$	$		$
72	40	Superstructure Coatings						
	40.3.5	High Presuure Blasting					$ /m2	
	40.3.5	Grit Blasting					$ /m2	
	40.3.7	Amerlock 400					$	

							/m2	
	40.3.7	Matchless 700 White					$ /m2	
	40.0 - 40.5	**Total Spec 40 Requirement**	hrs	$	$	$		$
73	41	Boat Deck Coatings						
	41.3.4	Ultra High Presuure Blasting					$ /m2	
	41.3.4	Grit Blasting					$ /m2	
	41.3.6	Amerlock 400 White					$ /m2	
	41.3.6	Amerlock 400 grey					$ /m2	
	41.0 - 41.5	**Total Spec 40 Requirement**	hrs	$	$	$		$
74	31	Helicopter Deck Lights						
	31.3.1.1.1 3	FSR	hrs			$		
	31.5.2	Spares			$			
	31.0 - 31.5	**Total Spec 31 Requirement**	hrs	$	$	$		$
75	64	Foredeck Coating Removal						
	64.3.4	Ultra High Presuure Blasting					$ /m2	
	64.3.4	Grit Blasting					$ /m2	
	64.3.6	Amerlock 400 Grey					$ /m2	
	64.3.6	Matchless 700 White					$ /m2	
	64.3.6	Matchless 708 Black					$ /m2	
	64.3.7	Amerlock 400 Black					$ /m2	
	64.3.7	Amerlock 400 Grey					$ /m2	
	64.3.8	Amerlock 400 White					$ /m2	

	64.0 - 64.5	**Total Spec 64 Requirement**	hrs	$	$	$		$
76	26.0 - 26.5	Dead Ship Air Compressor	hrs					$
77	23.0 - 23.5	Foc'sle Bulwork Repair	hrs	$	$	$		$
78	55	Sat B Replacement						
	55.3.9	Supply and install LMR 400 Cable					$ /10m	
	55.3	Supply and install Marine AC Cable					$ /10m	
	55.3.14	Supply and install Ecoflex 15 plus low loss cable					$ /10m	
	55.3.16	Supply and install 1300SB ABS approved cable					$ /10m	
	55.0 - 55.5	**Total Spec 78 Requirement**	hrs	$	$	$		$
79	57	IMIC3 Installation	hrs	$	$	$		$
80	58	Dual GPS/DGPS Installation						
	58.3.12	Supply and install Belden 9328 Cable					$ /10m	
	58.3.12	Supply and install Belden 9314 Cable					$ /10m	
	58.3.12	Supply and install 3C 14 AWG AC cable					$ /10m	
	58.3.12	Supply and install LMR-240cable					$ /10m	
	58.0 - 58.5	**Total Spec 58 Requirement**	hrs	$	$	$		$
81	51	VHF FM Renewal						
	51.3.5	LRS approved Glands					$ /unit	
	51.3	Removal and Disposal of RG 214 antenna Cable					$ /m	
	51.3.14	Removal and Disposal of RG 213 cable					$ /m	

	51.3.12	Supply and install LMR 400 UF-FR coax cable					$ /m	
	51.3.13	Supply and install 22awg cable						
	51.0 - 51.5	**Total Spec 51 Requirement**	hrs	$	$	$		$
82	54.0 - 54.5	Navtex Installation	hrs					

ANNEX H - APPENDIX 2

CUMULATIVE PRICING SHEET FOR EVALUATION

NOTES TO BIDDERS:
(1) Bidders are to sequentially enter their bids in the CUMULATIVE PRICING DATA SHEET, respecting the order of entries, and continue entering their pricing and cumulative pricing for each spec item. Bidders continue entering their pricing/cumulative pricing on the spec items with the intention of getting their bid as close to $17,000,000 (without exceeding), and no less than $16,100,000. If the bidder bids a firm Price on all 82 Work Items with a maximum total of 820 points, a total Firm Price less than $ 16,100,000 will be accepted.

(2)Skipping an entry of pricing/ cumulative pricing in the sequence will result in the bid being non responsive.

(3) Bidders are reminded that at no time can their cumulative pricing exceed the exposed budget amount of $17,000,000.00. Bidders are to stop entering pricing/cumulative pricing information in appendix 2 at the point where their bid gets as close to the exposed budget (without exceeding). If the cumulative price exceeds $17,000,000.00 the bid will be considered non responsive.

(4) The bidder cannot stop bidding on spec items until a minimum cumulative price of $16,100,000. is reached. If the minimum cumulative price does not exceeds $16,100,000.00 the bid will be considered non responsive.

(5) 10 points will be assigned to each spec item that the bidder has bid on. Bidders are reminded not to enter uncharacteristically low bid amounts on spec items that they do not intend on completing during the refit to acquire more cumulative points. The 1205 Acceptance process will remove two times the value to complete the spec items from the Contract Value (not two times the bid value).

(6) At the point where the bidder stops bidding, the cumulative bid price (not exceeding $17,000,000.00) is to be entered into Annex H1 - Price for Evaluation, Item A Known Work.

(7) At the point where the bidder stops bidding, the cumulative points associated with the spec item where the bidding stops is to be entered into Annex H1 - Price for Evaluation, Item E CUMULATIVE POINTS.

(8) Spec Items that have not been bid on by the Contractor, will not be introduced as new work or work arrising during the Contract.

COMPANY NAME:

Item	Spec. #	Description	Total Firm Price	Cumulative Price	Points per spec	Cumulative points
1	1	General Notes	$	$	10	10
2	2	General Technical	$	$	10	20
3	3	Mechanical	$	$	10	30
4	4	Electrical And Electronics	$	$	10	40
5	5	Electro-Magnetic Interference	$	$	10	50
6	6	Documentation	$	$	10	60
7	7	Tests, Dock Trials And Sea Trials	$	$	10	70
8	8	Berthing, Mooring, Docking/Undocking, Vessel Security	$	$	10	80
9	16	Asbestos Removal And Re-Insulation	$	$	10	90
10	27	Internal Lighting Renewal	$	$	10	100
11	12	Discharge Sea Bay Repair	$	$	10	110
12	14	ICCP System Renewal	$	$	10	120
13	20	Pipework Anti-Fouling System Renewal	$	$	10	130
14	13	Bubbler Piping Renewal	$	$	10	140
15	15	Hull Coatings	$	$	10	150
16	34	Intering System Tank Coating	$	$	10	160
17	36	Void Space Coatings	$	$	10	170
18	28	Helicopter Hanger Refurbishment	$	$	10	180
19	29	Helicopter Workshop Steel Repair	$	$	10	190
20	30	Flight Deck Steelwork Repair	$	$	10	200
21	19	Alarm, Monitoring, Pwr Mgt & ME Safety Systems Upgrade	$	$	10	210
22	24	Internal Communication System	$	$	10	220
23	9	Docking Plugs	$	$	10	230
24	10	Hull Butts & Seams	$	$	10	240
25	11	Sea Bay, Sea Chest &	$	$	10	250

		Cofferdam				
26	78	Anchors And Chains	$	$	10	260
27	72	Starboard Shaft Survey	$	$	10	270
28	73	Starboard Stern Seal	$	$	10	280
29	74	Tailshaft Weardown	$	$	10	290
30	35	Ballast Tank Coatings	$	$	10	300
31	37	Chain Locker Coatings	$	$	10	310
32	60	Relief Valve Certification	$	$	10	320
33	70	Megger Testing	$	$	10	330
34	75	Thermal Scan	$	$	10	340
35	59	Liferaft Servicing	$	$	10	350
36	71	Portable Fire Extinguishers	$	$	10	360
37	61	FM200 And Co 2 Systems	$	$	10	370
38	62	Fire Detection Systems	$	$	10	380
39	67	Helicopter Fuel System Servicing	$	$	10	390
40	38	Potable Water Tanks	$	$	10	400
41	66	Galley Rangehood And Exhaust Trunk Cleaning	$	$	10	410
42	77	Accomodation Laundry Dryer Exhaust Duct Cleaning	$	$	10	420
43	76	Accomodation Duct Cleaning	$	$	10	430
44	69	MCR Flooring Repairs	$	$	10	440
45	65	FPE Vacuum Contactors	$	$	10	450
46	52	Speed Log Renewal	$	$	10	460
47	53	CCTV Installation	$	$	10	470
48	56	Master Clock	$	$	10	480
49	17	General Piping System Replacement	$	$	10	490
50	18	Grey Water Deck Drains And Anti-Syphonic Valves	$	$	10	500
51	43	Shower Stall Renewals	$	$	10	510
52	47	Galley Deck Renewal	$	$	10	520
53	48	Temporary Access To Galley	$	$	10	530

54	49	Galley Equipment Renewal	$	$	10	540
55	50	Galley Deckhead Panel Renewal	$	$	10	550
56	21	Intering System Renewal	$	$	10	560
57	22	Steering Gear Control	$	$	10	570
58	68	Inverter Replacement	$	$	10	580
59	79	Battery Charger Replacements	$	$	10	590
60	44	P & S Searchlight Renewal	$	$	10	600
61	45	Aft Searchlight Replacement	$	$	10	610
62	46	Centre Searchlight Renewal	$	$	10	620
63	32	Exhaust Repair Uptakes	$	$	10	630
64	42	Escape Hatches	$	$	10	640
65	33	Exterior Doors	$	$	10	650
66	25	Sidelight Replacement	$	$	10	660
67	63	Navigation Lights	$	$	10	670
68	39	Mast Coatings	$	$	10	680
69	80	Deck Covering Renewals	$	$	10	690
70	81	Deck Covering Renewals	$	$	10	700
71	82	Deck Covering Renewals	$	$	10	710
72	40	Superstructure Coatings	$	$	10	720
73	41	Boat Deck Coatings	$	$	10	730
74	31	Helicopter Deck Lights	$	$	10	740
75	64	Foredeck Coating Renewal	$	$	10	750
76	26	Dead Ship Air Compressor	$	$	10	760
77	23	Foc'Sle Bulwork Repair	$	$	10	770
78	55	Sat B Replacement	$	$	10	780
79	57	IMIC3 Installation	$	$	10	790
80	58	Dual GPS/DGPS Installation	$	$	10	800
81	51	VHF FM Renewal	$	$	10	810
82	54	Navtex Installation	$	$	10	820
Total Bid Price			$			

ANNEX I

VESSEL CUSTODY

I1 Vessel Custody

1. This work is going to take place with the vessel "out of commission" and therefore in the "care, control and custody" of the Contractor.

2. An "ACCEPTANCE CERTIFICATE - ASSUMPTION OF CUSTODY OF FEDERAL GOVERNMENT SHIPS BY SHIPYARDS" (attached as Appendix 1 to this Annex "I") shall be completed as required and a copy passed to the INSPECTION AUTHORITY.

3. To facilitate this turnover, representatives of the Contractor and Canada shall confirm the condition of the vessel.

4. A vessel condition report shall be appended to the above noted certificate and shall be accompanied by colour photographs or videos in either conventional or digital format.

5. When the vessel is to be returned to the "care, control and custody" of Canada, an "ACCEPTANCE CERTIFICATE - RESUMPTION OF CUSTODY OF FEDERAL GOVERNMENT SHIPS BY THE CLIENT DEPARTMENT" (Attached as appendix 2 to this Annex I) shall be completed and a signed copy passed to Canada for distribution.

ANNEX I - APPENDIX 1

ACCEPTANCE CERTIFICATE

ASSUMPTION OF CUSTODY OF CANADIAN GOVERNMENT SHIPS BY CONTRACTORS

ACCEPTANCE OF _____

1. The undersigned, on behalf of the Department of Canadian Coast Guard and of _____ acknowledge to have handed over and received respectively CCGS _____ for the purpose of refit, all in accordance with the terms and conditions of PWGSC Contract Serial Number _____ and such documents which form part of the said contract.

2. It is mutually agreed by all parties that the condition report by compartment or area shall be considered as an addendum to this agreement; and shall be a valid document in the taking over of the vessel by the Contractor, even if the inspection and signing occur after the signing of the agreement but within the agreed ten (10) day period.

SIGNED AT _____ PROVINCE _____ ON,

THE _____ DAY OF _____(Month) 2014.

AT _____ HOURS.

FOR: _____
(CONTRACTOR)

FOR: _____
Department of Canadian Coast Guard

WITNESSED BY: _____
PUBLIC WORKS AND GOVERNMENT SERVICES CANADA

ANNEX I - APPENDIX 2

ACCEPTANCE CERTIFICATE

RESUMPTION OF CUSTODY OF CANADIAN GOVERNMENT SHIPS BY SHIPYARDS

ACCEPTANCE OF CCGS_____

1. The undersigned, on behalf of _____ and of the Department of Canadian Coast Guard, acknowledge to have handed over and to have received respectively the CCGS _____, said vessel having been received By _____ on _____(date), for the purpose of refit in accordance with the terms and conditions of PWGSC Contract Serial Number _____.

2. It is mutually agreed by all parties that the liabilities and responsibilities of……, as defined in Article 9 of PWGSC 1029 Supplemental General Conditions for Ship Repairs, for a vessel out of commission, shall automatically cease as at…….…….. hours on
…….. (date).

3. That effective from _____ hours on the _____(date) Article 8 of PWGSC 1029 for a vessel "in commission" Shall apply, and that responsibility for the care and protection of the said vessel shall revert to Canada.

SIGNED AT _____ PROVINCE _____ ON,

THE _____ DAY OF _____(Month) 2014.

AT _____ HOURS.

FOR: _____
(CONTRACTOR)

FOR: _____
Department of Canadian Coast Guard

WITNESSED BY: _____
PUBLIC WORKS AND GOVERNMENT SERVICES CANADA

ANNEX J
DELIVERABLES/CERTIFICATIONS

J1 Mandatory Tender Deliverables Check List

Notwithstanding deliverable requirements specified within the bid solicitation and its associated Technical Specification (Annex A), mandatory deliverables that must be submitted with the Bidder's tender to be deemed responsive are summarized below.

The Bidder must submit a completed Annex "J1" Deliverables/ Certifications.

The following are mandatory and the Bidder's submission will be evaluated against the requirements as defined herein. The Bidder must be determined to be compliant on each item to be considered responsive.

Item	Description	Completed and Attached
1	Invitation To Tender document part 1 page 1 completed and signed;	
2	1 hard copy and 1 soft copy for all 3 sections, Article 3.1	
3	Completed Annex "H" Financial Bid Presentation Sheet", clauses H1 through H6;	
4	Completed Pricing Data Sheets, per clause 3.1 Section II, Annex "H",Appendix 1;	
5	Completed Cumulative Pricing Data Sheets, per clause 3.1 Section II, Annex "H",Appendix 2;	
6	Completed Annex "J1" Deliverables/Certifications;	
7	Changes to Applicable Laws (if any), as per clause 2.4	
8	Integrity Provisions - Associated Information, section 5.1.1	
9	Federal Contractors Program for Employment Equity, Complete section 5.1.2	
10	Education and Experience Certification , as per Clause 5.1.3	
11	Status and Availability of Resources Certification, as per Clause 5.1.4	
12	Type of Contract Financial Security, as per clause 6.2.1	
13	Vessel Transfer Cost, as per clause 6.3 and Annex “H”	
14	Docking Faciltiy, as per clause 6.4	
15	Proof of good standing with Worker's Compensation Board, as per clause 6.5	
16	Proof of valid Labor Agreement or similar instrument covering the work period, as per clause 6.6	
17	Preliminary Work Schedule , per clause 6.7;	
18	Fueling and Disembarking Procedures, as per clause 6.8;	
19	Quality Management System, as per clause 6.9	
20	Health and Safety System, as per clause 6.10;	
21	Objective evidence of documented Fire Protection, Fire Fighting and Training Procedure, as per clause 6.11	
22	Insurance Requirements – letter , as per clause 6.13	
23	Proof of welding certification, as per clause 6.14	

24	Project Management as per clause 6.15 para 4	
25	List of subcontractors, as per clause 6.16	
26	Example of its Quality Control Plan, as per clause 6.17	
27	Example of an Inspection and Test Plan as per clause 6.18	
28	Details of Environmental Emergency Response Plan, Details of Formal Environmental Training as per Clause 6.19	
29	The Contractor must indicate the make and model of there Internal Communication System with their bid, as referenced in the specification at Annex A 24.3.8	

J2 Deliverables after Contract Award

Item	Description	Reference	Due By
1	Insurance requirements as per Annex "D"	Clause 7.11 and Annex ‘’D’’	10 Working Days after contract award
2	Revised Work Schedule	Clause 7.16	5 calendar days after contract award
3	Contract Financial Security	Clause 7.13	5 Working Days after contract award
4	The Contractor’s Quality Control Plan	Clause 7.21	5 calendar days after contract award
5	The list of Government specialized loaned equipment that the Contractor intends to request.	Clause 7.28	3 calendar days after contract award

J3 Deliverables Prior to Contract Award (If Requested)

Item	Description	Reference	Due By
1	Financial Capability	Clause 6.1	5 Working Days prior to contract award if requested

Annex “K” PWGSC Form 450 Claim For Exchange Rate

Public Works and Government Services Canada | Travaux publics et Services gouvernementaux Canada

Claim for Exchange Rate Adjustments
Demande de rajustement du taux de change

Contractor Name - Nom de l'entrepreneur	PWGSC File Number - Numéro du dossier de TPSGC	Contract Number - Numéro du contrat	Item/Invoice Number - Numéro d'article/de facture

1	2	3	4	5	6	7	8	9
Item Number Numéro d'article	Description	Foreign Currency Component (FCC) per Unit Montant en monnaie étrangère par unité **($CAN)**	Foreign Currency Devise étrangères	Quantity Quantité	Initial Exchange Rate Facteur de conversion initial **(i_0)**	Exchange Rate for Adjustments Taux de change aux fins du rajustement **(i_1)**	% Change Variation en % **$(i_1-i_0)/i_0 > 0.02$ (+/-)**	Adjustment = FCC X Quantity X **$(i_1 - i_0)/i_0$** Rajustement = montant en monnaie étrangère X Quantité X **$(i_1 - i_0)/i_0$**
							0.000	
							0.000	
							0.000	
							0.000	
							0.000	
							0.000	
							0.000	
							0.000	
							0.000	
							0.000	
							0.000	
							0.000	
							0.000	
							0.000	
					Total Exchange Rate Adjustment **Rajustement total du taux de change**			

PWGSC - TPSGC 450 (10/2013)

Instructions

Where:

i_0 = initial exchange rate (CAN$ per unit of foreign currency [e.g. US$1])

i_1 = exchange rate for adjustment purposes (CAN$ per unit of foreign currency [e.g. US$1])

Instructions to bidders:

1. Bidders must complete columns (1) to (4) at time of bidding, for each line item where they want to invoke the exchange rate fluctuation provisions.

2. Where bids are evaluated in Canadian dollars, the dollar values provided in column (3) should also be in Canadian dollars, so that the adjustment amount is in the same currency as the payment.

Instructions for Payment:

1. This form must be submitted with the invoice for payment with respect to all items with an FCC. Complete columns (1) through (7). Columns (8) and (9) will auto complete.

2. Suppliers should submit a separate calculation sheet for each invoice submitted showing the exchange rate adjustment for all line items with an FCC.

3. This form must be provided with all invoices where the exchange rate fluctuates more than 2% (increase or decrease), (i.e. $\text{abs}[(i_1 - i_0) / i_0] > .02$), unless otherwise stated in the contract.

Étant entendu que :

i_0 = Facteur de conversion du taux de change initial ($ CA par unité de devise étrangère [p. ex. 1 $ US])

i_1 = Taux de change aux fins du rajustement ($ CA par unité de devise étrangère [p. ex. 1 $ US])

Instructions aux soumissionnaires :

1. Les soumissionnaires doivent remplir les colonnes (1) à (4) au moment de présenter leur soumission, pour chacun des produits pour lesquels ils veulent se prévaloir des dispositions relatives à la fluctuation du taux de change.

2. Lorsque les soumissions sont évaluées en dollars canadiens, les montants en dollars indiqués dans la colonne (3) doivent également être en dollars canadiens, de sorte que le montant du rajustement soit indiqué dans la même devise que pour le paiement.

Instructions relatives au paiement :

1. Le présent formulaire doit accompagner la facture en vue du paiement pour chaque article comportant un montant en monnaie étrangère. Il faut remplir les colonnes (1) à (7). Les colonnes (8) et (9) seront remplies automatiquement.

2. Les fournisseurs doivent présenter une feuille de calcul séparée pour chaque facture et indiquer le rajustement du taux de change pour chaque article comportant un montant en monnaie étrangère.

3. Le présent formulaire doit accompagner toutes les factures pour lesquelles la fluctuation du taux de change est supérieure à 2% (augmentation ou diminution), (c.-à-d. $\text{abs}[(i_1 - i_0) /i_0] > .02$), à moins d'indication contraire dans le contrat.

PWGSC - TPSGC 450 (10/2013)

ANNEX A: VLE Refit
CCGS Henry Larsen
Vessel Life Extension Refit

Canadian Coast Guard
Vessel Support Services
Atlantic Region
PO Box 5667
St. John's, Newfoundland and Labrador
A1C 5X1

TABLE OF CONTENTS

1.0 GENERAL NOTES

1.1 Introduction

These project requirements are supplied to the Contractor outlining the objectives, performance, standards and engineering requirements for the Vessel Life Extension refit of the CCGS Henry Larsen for the Canadian Coast Guard, Department of Fisheries and Oceans.

It is the responsibility of the Contractor to ensure that:

1) The execution of the work specified herein is to the satisfaction of the Inspection Authorities and Regulatory Bodies;
2) All items and equipment supplied are deemed necessary for the safe and satisfactory operation and seaworthiness of the vessel, as required for a vessel of this class.

Sections 8 through to Sections 82 of this Specification define the individual work items that the Contractor must address during the CCGS Henry Larsen Vessel Life Extension Project.

The performance requirements specified in Sections 1 through to Sections 7 of these project specifications shall be applicable to Sections 8 through to Sections 82 in all respects. The specification in Sections 8 to 82 may not specifically reference Sections 1 to 7; however, they shall still apply.

Abbreviations used in this Specification are provided in Appendix A.

A complete listing of drawings for the CCGS Henry Larsen is attached in Appendix B.

The vessel will not be crewed during majority of the contract work period, however the vessel will be crewed for approximately one week after arrival at the VLE Shipyard and again for one month prior to the end of the work period. During this five week period the ship shall be habitable. Crew shall have personnel gear onboard living in cabins, using washrooms and galley operational. The vessel will be crewed during this period the vessel will be crewed to its “Safe Manning Level” which entails 22 personnel.

1.2 General Particulars of Vessel

Name:	CCGS Henry Larsen
Type:	Type 1200 Medium Gulf/River Icebreaker,
Ice Classes	Lloyd's Register ✠100A1 Ice Class 1A Super ✠ LMC Arctic Shipping Pollution Prevention Regulations, Arctic Class 4
Year Built	1987
Voyage Class	Unlimited, beyond 200nm
Builder	Burrard Yarrows Corp, Vancouver, BC

Principal Dimensions:

Length	99.8 meters
Breadth, molded	19.51 meters
Loaded Draft	57.2 meters
Tonnage	6,166.5 GRT, 1756.6 NT

The *Larsen* is fitted with three Wartsila, VASA 32, V16 cylinder diesel engines, two synchronous propulsion motors, two AC/AC cycloconverters and two 4160-volt 600-horsepower air bubbler compressors.

1.3 Project Work/Scope

The following work must be performed:

Asbestos Remediation:	This specification covers work to be completed onboard the CCGS "Henry Larsen", to remove Asbestos Containing Material (ACM) present in a spray coat product known as 'Weathershield'. 'Weathershield' was installed as a means of binding the surface of the sprayed on insulation that was used throughout the vessel. Although the 'Weathershield' product has been applied to the surfaces of all bulkhead and deckhead insulation, only the accommodation areas shown on the accompanying insulation guidance drawing, J13069-A01, are the areas where it requires removal prior to the new insulation being fitted.
Bubbler Piping Renewal:	Renewal of heavy wall bubbler piping.
Discharge Sea Bay :	Removal of corroded steel in discharge sea bay.
Intering System Control:	Removal of the existing Intering System Control, and replacement with a new Hoppe Marine Control (GSM).
Piping systems:	Removal and replacement of piping for the sanitary water piping, sea water piping, and portions of the fire mains, black water piping, and grey water piping including drain fittings.
Auxiliary Machinery:	Removal and replacement of emergency air compressor.
Water Tanks:	Removal and replacement of existing coating and coat with an epoxy coating approved for potable water storage tanks in accordance with regulatory requirements, repair of existing coatings in ballast tanks and coat with new epoxy coating.
Hull Work:	Steel replacement on inset of upper bow. Complete hull coating both above and below waterline. Complete superstructure and mast coating systems.
Steering Gear Upgrades:	Rebuild of existing ECR Console and upgrade of the Bridge Center and Bridge Wing Consoles through the addition of Drop-in Panels into the existing Consoles to facilitate the Propulsion Control and Steering Control upgrades.

Navigation Lighting:	Removal and replacement of the existing Navigation lighting system and replacement of existing searchlights.
Electronic Items:	Replacement of the internal communication system

1.4 Technical Data Package

The Contractor is provided with the following data packages to fully define the scope of work for the CCGS Henry Larsen Vessel Life Extension Refit Project:

- Technical Specifications (This Specification Document);
- Guidance Drawings – Electronic format;
- Applicable CCG Standards and Guidelines – Electronic format.
- DFO 5847 Paint and Hull Coating Standard.
- DFO 9415 Welding of Aluminum and Aluminum Alloys.
- DFO 5737 Fleet Safety Manual.
- 30-000-000-ES-TE-001 – Colour Coding Standard for Piping System

Supplementary Documentation (not provided by the CCG)

- ASTM F1321-92 (2004) – Standard Guide for Conducting a Stability Test (Lightweight Survey and Inclining Experiment) to determine the Light Ship Displacement and Centers of Gravity of a Vessel
- ASTM G82-95 (2003) – Standard Guide for Development and Use of a Galvanic Series for Predicting Galvanic Corrosion Performance
- CAN/CGSB-1.193-99 – Canadian General Standards Board for High-Build Epoxy Marine Coating
- CAN/CGSB 1.61-2004 – Canadian General Standards Board for Exterior Marine Alkyd Enamels
- CAN/CGSB 3-GP-11D – Naval Distillate Fuel, 2002-11-01
- CAN/CGSB 4.155-M88 – Canadian General Standards Board Flammability of Soft Floor Coverings – Sampling Plans
- CAN/CGSB 51.53-95 – Poly (vinyl chloride), Jacketing Sheet, for Insulated Pipes, Vessels and Round Ducts
- CAN/ULC-S102-03 – Surface Burning Characteristics of Building Materials and Assemblies
- CAN/ULC-S109-03 – Flame Tests of Flame-Resistant Fabrics and Films
- Canada Shipping Act Machinery and Hull regulations pertaining to a Research Vessel having general particulars as specified under Section 1.2
- CSA C22.1 SB-06 – Canadian Electrical Code Standard Part I Safety Standard for Electrical Installations
- CSA C22.2 – No. 0-M91 (R2006) – General Requirements – Canadian Electrical Code Part II
- CSA CAN3-Z299.3-85 (R2002) – Quality Assurance Program Category 3
- CSA W47.1 03 – Certification of Companies for fusion welding of steel
- CSA W47.2-M1987(R2003) – Certification of Companies for fusion welding of aluminum
- IEC 60092-504 ED 3.0 en:2001– Electrical Installations in Ships – Part 504: Special Features – Control and Instrumentation
- CAN/CSA-C22.2 No 60529-05 Degrees of protection provided by enclosures (IP Code)
- IEC 60533 Second Edition – Electrical and Electronic Installations in Ships – Electromagnetic Compatibility

- IEEE 45 STD -2002 – Recommended Practice for Electrical Installations Shipboard
- IEEE STD 315-1975 (Reaffirmed 1993) – Graphic Symbols for Electrical and Electronics Diagrams
- ISO 4406 – 1999 – Hydraulic fluid power -- Fluids -- Method for coding the level of contamination by solid particles
- ISO 18413:2002 – Hydraulic fluid power – Cleanliness of parts and components – Inspection document and principles related to containment collection, analysis, and data reporting
- ISO/TR 10949:2002 – Hydraulic fluid power – Component cleanliness – Guidelines for achieving and controlling cleanliness of components from manufacture to installation
- ISO/TS 16431:2002 – Hydraulic fluid power – Verification of cleanliness
- ISO 15748-1:2002 - Ships and marine technology - Potable water supply on ships and marine structures - Part 1: Planning and design
- ISO 15748-2:2002 - Ships and marine technology - Potable water supply on ships and marine structures - Part 2: Method of calculation
- ISO 2081 – 1986 – Metallic Coatings – Electroplated Coatings of Zinc on Iron or Steel;
- Lloyd's Classification Society Rules for the Classification of Ships
- MOSH (SOR/87-183) – Marine Occupational Safety and Health Regulations
- PMBoK 5th Edition – Project Management Institute guidelines to project management
- Provincial Department of Labour Industrial Health Regulations respecting removal of Asbestos
- S.N.A.M.E – Rules/Guidelines for Shop and Installation Trials – latest edition
- S.N.A.M.E.(3-47)*1989 – Rules/Guidelines for Sea Trials – latest edition
- SOLAS recommendations
- TP 11469 E – Guide to Structural Fire Protection
- TP 127E (2002) – Ship Safety Electrical Standards
- TP 11469 – Guide to Structural Fire Protection 1993
- TP 1861E Standards for Navigation Lights, Shapes, Sound Signal Appliances and Radar Reflectors (1991)
- TP 2072E Deck Cargo Safety Code 1974
- TP 7301 Stability, Subdivision, and Load Line Standards 1975
- T.C.M.S. Ship Safety Bulletin 06/1989 Grounding Safety in Dry-dock
- UL 1309 – Standard for Safety for Marine Shipboard Cable

TP Publications are available at the following web site:
http://www.tc.gc.ca/marinesafety/tp/menu.htm
CGSB Standards and publications are available at the following web site:
http://www.scc.ca

ULC Standards and publications are available at the following web site:
http://www.ulc.ca

Canadian Standards Association Standards are available at the following web site:

http://www.csa.ca

International Standards Organization (ISO) is available at the following web site:
http://www.iso.org

IEEE Standards and publications are available at the following web site:
http://www.standards.ieee.org

British Standards are available at following web site:
http://www.bsi-global.com

ANSI Standards are available at the following web site:
http://www.ansi.org

ASTM Standards are available at the following web site:
http://www.astm.org

ASME Standards are available at the following web site:
http://www.asme.org

S.N.A.M.E. Rules/Guidelines are available at the following web site:
http://www.sname.org

Project Management Guidelines are available at the following web site
http://pmi.org

CCG Fleet Safety & Security Manual is available at in Drawings & Manuals Folder.

1.5 Office and Progress Meetings

Contractor must supply adequate Office for Meeting and Meetings must be held monthly or more frequently as determined by the Contract Authority.

1.6 Facilities for Government Personnel

The Contractor must provide a minimum of 500 square feet of secure office space with the following requirements for CG and PWGSC personnel:

1) Two (2) lockable offices with a minimum of 200 square feet each;
2) One (1) boardroom with furnishings to seat ten (10) people (arrangements must consist of one large boardroom table with seating for ten). The boardroom must also be furnished with a 4 foot by 6 foot whiteboard on one wall.
3) Three (3) desks, full size with double pedestals containing drawers:
   a) Desk drawers must be lockable;
   b) One (1) desk must be an “L” shaped secretary style desk with side tables;
4) One (1) desk size tables;
5) Ten (10) chairs, of which six (6) must be fully adjustable and fitted with a swivel base and casters (in addition to the boardroom furnishings);
6) Two (2) bookcases – 4 foot wide by 6 foot height;

7) Three (3) filling cabinets – four (4) drawers per cabinet. All cabinets are to be lockable;
8) Four (4) keys must be provided for each lockable door, desk and filing cabinet;
9) Three (3) direct telephones – one (1) of which must be in the boardroom;
10) Three (3) high speed internet connections;
11) One (1) fax machine with dedicated outside line. The fax machine must use ordinary paper;
12) One (1) office copier capable of handling 8.5 by 11 inch paper, 8.5 by 14 inch paper and 11 by 17 inch paper sizes. The copier must be equipped with an auto sheet feeder and serviceable within two (2) hours of any breakdowns.

The offices must be supplied with heating, ventilation/air conditioning, and lighting as per provincial health and occupancy regulations.

Washroom facilities must be located close by.

Six (6) parking spaces must be allocated within the confines of the shipyard for Government personnel. The spaces must be clearly marked and the required passes provided to Government personnel.

All of the above equipment and facilities must be clean and in good condition to the full satisfaction of Canada.

The facilities listed above must be available to Canada for 10 working days after delivery of the vessel.

1.7 Storage Space

The Contractor must provide 3000 square feet of secure, environmentally controlled storage space for the ship's equipment. The storage space environment must be maintained at 15 degrees Celsius and at a maximum relative humidity of 70 percent for the duration of the contract period.

The storage space must also contain 5000 square feet of standard seven (7) foot high storage shelving with 5 equally spaced shelves for 3000 square feet and shelving with 3 equally spaced shelves for 2000 square feet.

The Contractor must provide 150 new pallets for the storage of items.

All items must be stored in such a manner so as to be easily accessible for inspection. No items must be stored directly on floors.

The storage space must have one (1) desk with two (2) chairs.

The storage space must be on, or close to, the premises of the Contractor's facility.

The Contractor must provide one (1) three (3) ton truck and driver for 30hrs to assist Canada in de-storing the vessel.

The Contractor must provide one (1) forklift and forklift driver for 30 hours to assist Canada in de-storing the vessel.

The Contractor must provide one (1) three (3) ton truck and driver for 30 hours to assist Canada in re-storing the vessel.

The Contractor must provide one (1) forklift and forklift driver for 30 hours to assist Canada in re-storing the vessel.

The Contractor must provide storage for the remaining fuel on board for the duration of the contract. For the purposes of this specification the Contractor must quote for storage of 40 tonnes of diesel fuel. Any difference in the amount of fuel from 40 tonnes the price of storage must be adjusted up or down using the 1379 process.

1.8 Fees and Costs

The Contractor must include in their bid for the following charges, fees and expenses as required to carry out the work:

1) Services as defined by section 8.2 below;
2) Regulatory Bodies;
3) Classification Society Inspections;
4) Factory Service Representatives;
5) Tests and Trials of equipment and vessel;
6) Provision of safety services, e.g. gas freeing of tanks, fire protection, cocooning asbestos containing areas;
7) Certification of lifting devices as required;
8) Classification SocietyType approval of equipment to be installed as standardunless otherwise specified.

1.9 Quality Assurance

Canada may audit the Quality Assurance program.
The Contractor must deliver, as part of its bid package, confirmation that its Quality Assurance program is in accordance with the above-mentioned standards.

1.10 “As Delivered” Inspection

The Contractor must, with the Technical Authority and the Inspection Authority, carry out an operational inspection of the vessel. All parties must sign off on the operational assessment of vessel’s equipment and systems. This activity must be carried out before hand-over of the vessel to the Contractor. The Contractor must provide a photographic survey of the inspection to the Inspection Authority and the Technical Authority.

This inspection must meet the requirements of Section 6 of this Specification.

1.11 Property of Canada

1.11.1 General

All materials and equipment removed from the vessel by the Contractor, unless specifically identified within the project requirements for disposal as scrap, must remain the property of Canada.

All such equipment and materials must be held and retained in "as is" condition by the Contractor pending instructions from the Contract Authority.

The Contractor may obtain agreement with the Contract Authority for the disposal of materials and equipment that will have no market value after removal from the vessel.

1.11.2 Categorization

Property of Canada that is to be either permanently or temporarily removed from the vessel must be identified as being in one of the following three (3) categories:

Category "A"
These items must be permanently removed from the vessel and must remain the property of Canada. The Contractor must store and protect these items from weather, physical damage, or complete loss. The Contractor must store these items on pallets, skids, or in containers suitable for shipment until such a time as they have been inspected and accepted into the care and custody of Canada. The Contractor must provide storage to Canada, of these items for the contract period. Canada must be responsible for the removal of these items from the Contractor's premises.

Category "B"
These items must remain the property of Canada, and must be temporarily removed from their location on the vessel during the contract work. They must be returned to their original location on the vessel prior to the vessel leaving the Contractor's facility. The Contractor must protect these items from weather, physical damage, or complete loss. These items must be stored to allow movement of the items to permit access for inspection, refurbishment and/or maintenance of these items as necessary. The Contractor must take care not to damage the equipment and material.

Category "C"
Upon removal, these items must become the property of the Contractor and are to be disposed of in accordance with all applicable laws, rules and regulations.

Prior to removal of any items from the vessel, the items must be clearly identified with wire tags as falling into either Category "A", "B", or "C" as determined by the Chief Engineer.

This requirement must be in addition to any spare parts required for regulatory purposes. All such spare parts must be supplied packaged and individually identified with equipment description, model number and catalogue/part number.

1.12 Spare Parts

All system spares must be provided in a spare parts list supplied by the Contractor in an electronic MS Excel spreadsheet format, listing individually the quantity recommended.

All new machinery and equipment procured by the Contractor for installation on the vessel must be supplied complete with sufficient manufacturer's recommended spare parts for six months or 2,000 hours of operation whichever is greater, or unless otherwise specified.

All system spares must be provided in a spare parts list supplied by the Contractor in an electronic format MS Excel spreadsheet format listing individually the quantity of installed base and unit price of each spare listed. This list must include the following fields:
Supplier;
Manufacturer;
Manufacturer's Part Number;
Price per Unit;
Unit definition (each, case, etc);
Recommended Quantity;
Associated System/Equipment.

An electronic copy of the spares parts list must be supplied to the Inspection Authority and the Technical Authority.

The Contractor must notify the Inspection Authority and the Technical Authority when such spare parts have been received.

The Contractor must store the spare parts in accordance with manufacturer's requirements ensuring that the spares are protected from weather, physical damage, or complete loss.

The Contractor must deliver the spare parts to:
Canadian Coast Guard
CCGS Henry Larsen
C/O Fleet Technical Spares
280 Southside Rd.
St. John's, NL A1M1C5

1.13 Project Management

1.13.1 Introduction

Project management refers to system integration and technical control as well as business management of the CCGS Henry Larsen Vessel Life Extension Refit Project.

NOTE: Items below marked with an asterisk * must be delivered no later than 5-days after contract award.

1.13.2 Project Action Plan (PAP)*

The Contractor must document the project management for the work in a Project Action Plan and must update this plan at monthly intervals or more frequently as required by the Contracting Authority.

The PAP must comprise organization structure charts, a master schedule, support schedules, sub-Contractor schedules and work, Government Furnished Equipment (GFE), and Contractor Furnished Equipment (CFE) delivery dates as a minimum.

The monthly updates to the PAP must comprise schedule updates, a progress report and review meetings. The components of the PAP and its updates are described in the following sub-sections.

1.13.3 Project Integration Management*

The Contractor must provide an overall project organizational chart identifying all key personnel and sub-Contractors. Further, the Contractor must identify the contract-related work each sub-Contractor is responsible for.

1.13.4 Change Management Log*

The Contractor must provide a Change Management Log that must be used for the duration of the project to manage project changes.

The Change Management Log must track project issues with the following criteria:

1) Individual tracking number;
2) Date issue was raised;
3) Expected resolution date;
4) Date issue was resolved;
5) Brief note of resolution on issue;
6) Individual who raised issue;
7) Individual assigned to resolve issue;
8) Risk Factor.

If issues require a change in the work they must be dealt with through the PWGSC 1379 Process.

1.13.5 Risk Management*

The Contractor must identify emergent risks and rank these risks by impact on the work. Mitigation strategies must be identified for all “High” risks. The “Risk Management Plan” must be updated at least bi-weekly and provided to the Technical and Contracting Authorities. The “Risk Management Plan” must be included in the monthly progress meeting Record of Decisions.

1.13.6 Scheduling*

The Contractor must provide a schedule(s) that breaks the work down to the system and component level. The schedule must include sub-Contractor schedules to the same level.

The Contractor must update the schedule(s) on a monthly basis and the updates must be provided to the Contract Authority, the Inspection Authority and the Technical Authority.

The schedule(s) must identify all work in the project. It must include long lead items, GFE, strip outs, production, assembly, installation, bench testing, system commissioning and tests and trials, as well as all scheduled and required resources.

The schedule(s) must identify the major milestones, critical path and all interrelationships between tasks. The schedule(s) must be baseline.

The initial schedule(s) must be delivered 21 calendar days after contract award.

A milestone schedule must be supplied with the bidder's tender package.

The PMBoK 5th Edition must be used as the reference for scheduling.

1.13.7 Project Reporting

The Contractor must provide a monthly Progress Report describing the status of the project Time Line, Cost and Performance as an introduction. Time, Cost and Performance must then be addressed in detail, clearly demonstrating earned value using CPI and SPI. The report must identify significant risks to the program and the actions taken to resolve these risks. The risk analysis must identify any impact upon delivery and actions taken to recover any slippage that may affect the contract delivery date. The report, either in hard copy or in electronic format, must be delivered monthly, three (3) working days prior to the progress review meeting to the Contract Manager, the Inspection Authority and the Technical Authority. The progress report must include sub-Contractor and major component supplier activity.

2.0 GENERAL TECHNICAL

2.1 Physical Operating Conditions for Equipment

All new machinery and/or equipment that are to be supplied and installed must be designed for operation under the following conditions:

1) Outside air temperature:
2) –40 degree C winter;
3) +35 degree C summer;
4) Water temperature:
   i. 0 degree C winter;
   ii. +30 degree C summer;
5) Wind Velocity of 80 knots;
6) Sea State 6;
7) Ship inclination of up to 35 degrees roll on either side, with a cycle frequency of 10 seconds, and 10 degree pitch with a cycle frequency of 5 seconds and maximum linear acceleration of 1.0g;
8) Permanent list of 22.5 degrees port or starboard, and permanent trim of 10 degree fore and aft.

2.1.1 Equipment below Decks

All equipment must be capable of its intended operation at the ambient conditions of 95% relative humidity at temperatures up to 50 degrees Celsius.

2.1.2 Equipment above Deck

The equipment must be protected by means of an enclosure and must be capable of its intended operation in weather deck locations such that it is impervious to the effects of sea spray.

2.1.3 Electronic Compartments

Compartments containing electronic equipment must be provided with ship's services to maintain the following conditions:
Manned Compartments:
Room temperature: 20°C to 25°C;
Relative humidity: 5 to 70%;
Noise level: 65 dBA.

Unmanned Compartments:
Room Temperature: 20°C to 25°C;
Relative humidity: 40 to 70%;
Noise level: 80 dBA.

2.1.4 Vibration

All shipboard equipment, racks, cables and other accessories must be mounted so as to be capable of performing their intended operation under the following conditions:
Shipboard Vibration:

Up to 13.2 Hz with displacement amplitude of +/- 1.0mm;
13.2 to 80.0 Hz acceleration amplitude of +/- 0.7g with a maximum acceleration of 0.7g;
Natural frequencies at supports for equipment and parts of equipment must not be within the 0 to 80 Hz range, except where they cannot be kept outside this range by constructional design methods, the vibration must be damped so that undue amplification is avoided.

2.2 Protection of Personnel

2.2.1 General

The Contractor must ensure the removal of all rough edges, points, sharp corners and protrusions created during the conduct of the work.

Smoking is not permitted aboard this vessel.

2.2.2 Hot Work

The following precautions must be taken where hot work is to be conducted:
The compartment(s) affected must be certified gas free by a certified marine chemist or other qualified person. The Contractor must provide copies of all certificates to the Inspection Authority. Certificates must specify, "Safe for persons" and/or "safe for hot work" as appropriate. The Contractor must post a copy of all certificates at the entrance to the affected spaces;
Protective material must be used to prevent the spread of sparks, protecting electrical cables, machinery and other services;
Fire sentries must be provided in each space and in all adjacent spaces, if welding, grinding and burning is being carried out. Fire sentries must be provided with an appropriate fire extinguisher and must be trained in its use. The fire sentry must maintain a watch in his designated area for at least thirty (30) minutes after any hot work has been completed.

Any hot work carried out onboard the vessel during the contract period must be conducted in accordance with the Canadian Coast Guard Fleet Safety Management System (CCGFSM) procedures and individual shipboard work instructions. Copies of the manual and site-specific work instructions are available from the Technical Authority. The Contractor's Standard Operating Procedures (SOP's) may be substituted for this requirement based upon a review and acceptance of the Contractor's SOP's by the Contract Authority and the Technical Authority.

2.2.3 Confined Space Entry

The Contractor must supply a copy of a certified marine chemist or other qualified person's "Gas Free Certificate" to the Inspection Authority prior to commencing work. Certificates must specify, "Safe for persons" and/or "safe for hot work".

Any entry into confined spaces during the contract period must be conducted in accordance with the Canadian Coast Guard Fleet Safety Management System procedures

and individual shipboard work instructions. The Contractor's Standard Operating Procedures (SOP's) may be substituted for this requirement based upon a review and acceptance of the Contractor's SOP's by the Contract Authority and the Technical Authority.

2.2.4 Rotating Machinery

Newly installed machinery must be provided with shielding to prevent contact with rotating elements, as per requirements of Section 3.8.3 of this Specification.

2.2.5 Electrical Equipment

When working on electrically operated equipment electrical lock-outs must be used to isolate the equipment and electrical caution tags posted at the main power and distribution panel on those switches supplying equipment under maintenance and verification made at the terminals to ensure power is not present.

Any lock-out requirements onboard the vessel during the contract period must be conducted in accordance with the Canadian Coast Guard Fleet Safety Management System procedures and individual shipboard work instructions. The Contractor's Standard Operating Procedures (SOP's) may be substituted for this requirement based upon a review and acceptance of the Contractor's SOP's by the Contract Authority and the Technical Authority.

2.2.6 Work Aloft

Any work aloft must be conducted in accordance with the Canadian Coast Guard Fleet Safety Management System procedures and individual shipboard work instructions. The Contractor's Standard Operating Procedures (SOP's) may be substituted for this requirement based upon a review and acceptance of the Contractor's SOP's by the Contract Authority and the Technical Authority.

2.2.7 Asbestos

No material containing asbestos must be used. Any handling of material containing asbestos must be performed by personnel trained and certified in accordance with Provincial Labour Regulations. The Contractor must provide the certificates of certified personnel to the Inspection Authority prior to the commencement of any such work.

The Contractor must be responsible for the safe disposal of any asbestos containing material where such material is disposed of. The Contractor must provide the Inspection Authority with copies of certificates pertaining to the disposal of the asbestos containing material in accordance with Federal, Provincial and Municipal regulations.

Note: CGG has identified the presence of various nonfiable asbestos materials in the CCGS Henry Larsen.

An asbestos inventory report showing the locations and amounts of these materials is available for viewing from the Technical Authority or their designate.

The attached Contractor Notification and Acknowledgement Form (Appendix J) is to be completed and signed by the Contractor and delivered to the Technical Authority before any work commences.

The Contractor is responsible to ensure the Contractor's workers and sub-contractors and subcontractor's workers are aware of the presence of various non-friable asbestos materials in the CCGS Henry Larsen and inform the Chief Engineer/Asbestos Coordinator before undertaking any work described in the Contractor Notification and Acknowledgement Form.

2.3 Workplace Hazardous Materials Information System (WHMIS)

The Technical Authority will identify to the Contractor any hazardous materials that are onboard the vessel in accordance with the Workplace Hazardous Materials Information System (WHMIS).

WHMIS Material Safety Data Sheets for identified hazardous materials onboard the vessel will be provided to the Contractor by the Technical Authority.

The Contractor must be responsible for all Contractor supplied products and materials used aboard the vessel. These materials must be identified to the Technical Authority and the Inspection Authority. Copies of the MSDS sheets must be provided to the Inspection Authority and the Technical Authority.

2.4 Protection of Equipment

The Contractor must take measures to ensure that all surfaces and items of material or equipment installed on the vessel, finished surfaces, final color coats and other finished work must be protected against damage, soiling, and/or contamination.

All electrical and electronic equipment and components must be protected during the contract against damage by direct or indirect physical contact or by the effects of adverse temperatures or other environmental conditions.

Any damage to surfaces, equipment, furnishings or decor incurred prior to acceptance by Canada must be returned to "As Delivered" condition by the Contractor at no expense to Canada.

All openings in machinery and/or systems prior to connections being made must be kept covered by inserts or covers at all times.

The Contractor must obtain and follow instructions from its sub-Contractors for any special protection required for sub-Contractor furnished equipment during the project work. Such instructions must be made available to the Technical Authority and the Inspection Authority.

The Contractor must ensure that the ship's machinery, equipment and systems are protected from all hazards, including but not limited to damage from ongoing work,

corrosion, sandblasting (directly or indirectly), paint over spray, hot work, adverse temperature or other environmental conditions and contaminants.

2.5 Access to Vessel and Equipment

2.5.1 Installation and Removal Routes

If the Contractor intends to disturb the physical structure of the vessel to facilitate removal or installations prior approval of the Technical Authority and the Inspection Authority is required.

All interference items, protected, removed or disturbed during the course of overhaul, removal and installation, including lagging and/or insulation, must be renewed in good order to "As Delivered" condition on completion of work, unless otherwise specified.

2.5.2 Penetrations

Sealing of redundant penetrations must be performed in a manner acceptable to TCMS, Transport Canada Marine Safety. The Contractor must notify the Inspection Authority of any such penetrations that have been sealed and provide copies of all TCMS documentation.

2.5.3 Access for Maintenance

The layout of the machinery and equipment must be designed and constructed to permit ready access for inspection, maintenance and repair without disturbance of other machinery, equipment or structures. Provisions must be made for the removal of machinery components.

2.6 Assembly of System Equipment and Components

2.6.1 Securing Arrangements of System Equipment and Components

All new and existing systems, equipment and components installed or disturbed as a result of the work, must be secured to prevent damage caused by the physical operating conditions of the vessel, as per Section 2.1 of this Specification.

The Contractor must follow manufacturers' recommendations for installation arrangements. In the event this information is not available, securing arrangements must be approved by the regulatory requirements prior to the Contractor commencing the securing activities.

The Contractor must follow torque specifications as provided by the manufacturer. Where manufacturer specific torque specifications are not provided, standard SAE nut and bolt torques must be used.

2.6.2 Cleaning

The Contractor must ensure that after installation, parts and assembled equipment must be cleaned of smudges, spatter or excess solder, weld metal and metal chips or any other foreign material. This includes any particles that could loosen or become dislodged during the normal expected life of the equipment. All corrosive material must be removed. This cleaning must take place before final assembly of the equipment parts. Any disturbed paint is to be repaired prior to closing machinery.

2.6.3 Damaged Items

Covers, cowlings, components and equipment damaged by the Contractor must be replaced at no expense to Canada.

2.7 Welding

2.7.1 General

For fusion welding for steel the Contractor must be certified in accordance with the Canadian Welding Bureau (CWB), CSA\ACNOR W47.1 1983, Division 2.1. The Contractor must supply proof of his accreditation to the Inspection Authority. All such welding must be to CSA Standard W59M “Welded Steel Construction (Metal Arc Welding) (Metric Version)”.

All aluminum welding must conform to the requirements of CSA Standard W47.2-M1987 (R1998) "Certification of Companies for Fusion Welding of Aluminum" Division 2.1 and must be performed by persons currently certified by the Canadian Welding Bureau to CSA Standard W47.2-M1987 (R1988). Proof of certification must be provided to the Inspection Authority.

The Contractor must provide copies of all welding certificates at the start of the contract work.

The Contractor must submit CWB stamped welding specifications and weld procedure data sheets to TCMS where required. Weld procedures for joining pipe connections must be recorded and approved by CWB in accordance with ASME, Section IX.

All procedures pertaining to hot work as detailed in Section 2.2.2 must be adhered to.

2.7.2 Removal of Attachments

Temporary cleats, lifting eyes and fastenings for servicing structures must be removed by burning or grinding, and any remaining irregularities must be ground flush with the surface of the parent plate. Any disturbed paint is to be repaired.

2.7.3 Weld Design Requirements

The size, length and details of welds must be approved by TCMS.

2.8 Painting

2.8.1 General

The Contractor must prepare a paint schedule and submit the schedule to the Technical Authority and the Inspection Authority for review and acceptance. The paint schedule must list all areas and compartments on the vessel affected by the project work and indicate the proposed paint type, painting scheme, surface preparation, type of coating, number of coats, thickness and colors. All paint used must be compatible with the existing paint on the vessel.

All pipe markings must be in accordance with CGFM 308-00-03, Color Coding Standard for Piping Systems.

All new and disturbed steel and aluminum work must be painted in accordance with publication DFO 5847 and to the paint manufacturer's specifications.

All paint must be for marine application and must meet CAN/CGSB 1.61-99 for exterior marine alkyd enamels and CAN/CGSB 1.193-99 for marine epoxy paints. Paint, varnish and other finishes used on interior surfaces must be listed in TCMS's list of approved products, TP-438.

Each coat of paint must be of a different shade to indicate proper coverage, and thoroughly dry before application of subsequent coats. At minimum, the first primer coat must be applied by brush or airless spray.

The final topcoats must be protected from soiling or damage until the custody of the vessel is returned to Canada. Care must be taken in the application of paint to ensure that furnishings, and equipment liable to more serious damage due to excess spray, must be adequately protected.

The following must NOT be painted:
Screw threads;
Grease fittings;
Bronze pins;
Door screens;
Nameplates;
Gaskets;
Stainless steel or monel metal fittings;
Machined surfaces;
Instrumentation;
Interior gratings;
Electrical wires, insulation and fittings;
Electrical panels;
Rubber seals of watertight doors and hatches;
Fire door seals, and;
In general, all working parts.

2.8.2 Heavy Metal Based Coatings

Paints containing lead, mercury or copper must not be used.

2.9 Identification

2.9.1 Nameplates

Nameplates must be fitted for all new equipment, new compartments, new doors and closures.

All nameplates must be in English, except where required in English and French by TCMS for reasons of emergency operation.

Lettering must be clear and concise with the minimum use of abbreviations. Primary information must be given in larger size lettering than secondary information.

The type of nameplates must suit the location in the vessel as specified below:

Plastic must be used in accommodation and navigation spaces where the nameplate is free of exposure to mechanical damage or covering over by ice, paint, oil, grease or dirt.

Plastic nameplates must be laminated phenolic rigid type with machine engraved lettering and secured with stainless steel or brass machine screws. Unless otherwise specified, nameplates must have white lettering on black for normal signs and white lettering on red background for warnings and emergency signs.

Laminated plastic nameplates, black with white core engraved through to the center core, must be provided for all devices located on the exterior surfaces of the switchboard.

Nameplates must be secured to the switchboard with machine screws. New nameplates to be fitted on the existing switchboard must be consistent in size and lettering with those already fitted. Nameplates for feeder circuits must identify each circuit by name and number and the fuse size and/or trip element rating.

Warning or caution nameplates must be laminated plastic, red with white core engraved through to the center core, and must identify circuit breakers with shunt trips requiring completion of remote circuits prior to being operated, and those having a potential power source connected to both sides, or to any other potentially hazardous condition.

Engraved Metal, stainless steel or brass nameplates must be used in machinery spaces and where exposed to the weather. Engraved metal nameplates must have lettering accentuated by means of black wax and secured with stainless steel or brass machine screws.

A complete drawing list of nameplates, detailing size of plate, size of lettering and inscription must be submitted to the Inspection Authority and the Technical Authority for review and acceptance prior to ordering and/or manufacturing.

2.9.2 Key Tags

Tags must be supplied for all new keys and must be of plastic composition. Tags must be marked to identify the space they serve. The description must be identical to that used for the space or equipment identification nameplate. A complete list of new keys and tags must be provided to the Inspection Authority and the Technical Authority.

All new keys and new key tags must be turned over to the Technical Authority as part of the acceptance of the vessel.

2.9.3 Safety Related Signs

All new signs must be in English except where required in English and French by TCMS for reasons of safety.

Painted signs for muster station directions, fire stations and emergency equipment, etc. must be supplied and located in accordance with TCMS approval.

The Contractor must prepare and submit a drawing indicating the location, type and size of lettering for all signs. This drawing must be submitted to TCMS for approval prior to construction or installation of the signs.

2.9.4 Cleaning

The Contractor must maintain the vessel in a clean condition. Debris and garbage must be removed from the vessel and disposed of at the end of each working day.

Attention must be given to hazardous materials such as flammable or toxic waste products. These must be disposed of in accordance with federal, provincial and municipal regulations.

Prior to any work commencing in the machinery spaces, the bilge in the machinery spaces must be cleaned. Cleaning must include pumping and disposal of all bilge water and washing of all bilges to remove all grease, oil and contaminants. Disposal of waste must be in accordance with all federal, provincial and municipal regulations. Disposal certificates must be provided to the Inspection Authority and the Technical Authority within 24 hrs of any disposal or transfer from the vessel. The Contractor must bid on 5000 litres of bilge waste for disposal. The “1379” process must be used to adjust the cost of bilge waste disposal up or down, as the case may be.

Vessel cleanliness must extend to the bilge areas which must be maintained free of oil, water, and debris for the duration of the project.

Prior to acceptance by the Coast Guard, the Contractor must thoroughly clean all spaces of the vessel including all bilge areas.

3.0 MECHANICAL

3.1 General

The Contractor must supply all materials and/or equipment within the intent of these specification requirements.

All replacement machinery, equipment and fittings must be new and unused, manufactured by a recognized manufacturer, having established facilities for production, and supply of parts and service in North America.

All machinery and equipment must be approved by a Classification Society for use onboard this class of ship and must meet all applicable TCMS regulations. The Contractor must provide copies of Classification Society approval certificates to the Inspection Authority and the Technical Authority. Approval certificates must be current and for the type and model of equipment being installed by the Contractor. The Contractor must make reference to Section 6 for complete documentation requirements.

All machinery must be capable of operating under the conditions set out in Section 2.1 of this Specification. All machinery must be installed to manufacturer's recommendations with particular attention to the reduction of vibration and noise transmission. All rotating machinery must be installed with axis fore and aft or vertical unless otherwise approved by TCMS. Location of all units must be with regard for accessibility for maintenance and repair.

3.2 Piping

3.2.1 General Installation

Piping must be installed so as not to interfere with:
Passage through doors, hatches, scuttles, openings covered by portable plates or working areas.
In frequently used walkways, the minimum overhead clearance of the piping must be 6 feet 6 inches.
Operation of machinery, equipment, controls, and with routine maintenance of machinery and the ship's structure;
Designated equipment removal routes or removable structural portions of the ship provided for equipment access, removal, and/or maintenance.

Piping must be located where it would not likely be subject to physical damage.
Protection for piping must be provided wherever susceptibility to physical damage is unavoidable. Piping runs must be as direct as possible and utilize the minimum amount of fittings that would increase the frictional flow characteristics of the piping run. Piping must be portable in way of mechanical, electrical or hydraulic systems requiring periodic overhaul. Isolating valves must be provided in order to facilitate piping portability in such a way as to minimize the effect on operation of the remainder of the system.

Where high and low points in piping are unavoidable, vent drains or other effective means must be installed to ensure proper system function. Pump suction piping must be as short as practical, and of sufficient diameter and arranged to rise without forming bends likely to cause air pockets.

Tail pipe connections must be 0.5D above the bottom of the tank at the deepest point, D being the inside diameter of the suction pipe.

Bulkheads and decks must generally be pierced close to boundaries of compartments. Cutting bulkhead stiffeners, deck beams and plating butts and seams is not permitted without prior TCMS approval.

Piping must not be led through inner bottom tanks and voids except as necessary to serve the tanks themselves, or as necessary to avoid penetrations of fuel tanks, potable water tanks and ballast tanks by piping less desirable therein than in the inner bottom tanks and voids. Piping that operates under pressure must be kept out of voids, cofferdams and other normally non-vented spaces.

Deflections of bulkheads, decks and other structures due to working of the ship must be considered and the piping arranged for the necessary clearance and flexibility.

The amount of piping led through messing and living spaces must be minimized. Piping in such places must be symmetrically and neatly arranged for the necessary clearance and flexibility. Piping must be kept clear of the machinery control room.

Piping must not be led through the following spaces, except as necessary to serve the space:
Chain lockers;
Wiring trunks and enclosures.

When systems other than those serving a tank or similar tanks are permitted to pass through fuel oil or diesel oil tanks, the piping must be Schedule 80 thickness and must have welded joints.

Supports must be designed and located to safely support the weight of the piping, its operating or test fluid (whichever is heavier) and its insulation and lagging (where installed). The supports must also carry the loads imposed by expansion and contraction of the piping and working of the ship.

The number of supports installed, the type selected and their location must prevent excessive vibration of the piping under all system operating conditions. They must not constrain the piping for all operating conditions, so as to cause excessive transfer of load from support to piping, from support to support or excessive stress from being transmitted by the piping to machinery, equipment or the ship's structure.

Rigid anchors must be designed so that noise and vibration from piping system components and excessive heat from high temperature systems are not transferred through the anchor into surrounding areas.

Changes in direction of piping must be made by pipe bends and offsets where space permits; otherwise, straight length of pipe and pipefittings specified for the system must be used. Miter joints must be permitted only in piping such as, air escape vents and overflows where their use would not cause unacceptable pressure drop or turbulence in the fluid flow. Branch connections must be located to minimize turbulent flow and the type used, (crosses, single and double-sweep tees, Y and lateral fittings), must be suitable for the required flow characteristics.

Direct reading thermometers, pressure, and/or compound gauges must be located in positions where they can be easily read and safe from damage. All pressure and compound gauges must be provided with an isolating cock.

Galvanic corrosion must be minimized in the sea water systems that couple dissimilar metals. Control of galvanic corrosion may be obtained by the coupling of a relatively small area of cathodic material to a large area of anodic material or the dissimilar metals may be separated with a short length of extra heavy galvanized steel pipe (waste piece). The permissible potential difference must be no greater than 0.4 volts. The latter must be fitted only when specified. The permissible potential difference must be no greater than 0.4 volts.

Raised face flanges must not be used against bronze or other relatively low strength composition valves, fittings or flanges.

Where pipes pass through holes in non-watertight structure, provision must be made to keep the pipes from bearing on the structure.

3.2.2 Material Selection

Figure 3-1 specifies those materials that are acceptable for use in specific piping systems. Figures 3-2 to 3-8 specify materials for various piping systems and components.

Piping systems and components must comply with this Specification except where the specified material is incompatible with materials remaining in the system. Alternate materials not listed must be employed only when approved or recommended by original equipment manufacturer and/or supplier of that equipment/component. In such instances direction must be requested from the Technical Authority before proceeding further with the work.

Steel piping employed for raw water service must be hot dipped galvanized upon complete fabrication.

Figure 3-1: Acceptable Materials for Specific Piping Systems

Item/System	Material Figure
Raw Water Systems	**Reference**
Fire Main, Sanitary (Black Water), Sewage, Ballast, AFFF, Bilge Suction (Oil/Water Separation)	4t, 6b, 1a, 2a, 3a, 6a, 7a, 3fl, 4fl, 5fl, 11fl, 12fl, 1f, 2f, 3f, 4f, 19f, 20f, 21f, 1v, 2v, 3v, 5v, 6v, 7v, 8v, 22v, 5g (AFFF 11g only) (4b non-bilge areas).
Main and Auxiliary Circulating Systems	4t, 9v, 10v, 11v, 12v, 8f, 9f, 10f, 11f, 12f, 20f, 21f, 4fl, 5fl, 5g, 6g, 7g, 1b, 2b, 6b, 1a, 2a, 4a.
Oil Fuel, Marine Diesel and Distillate	**Reference**
Filling and Transfer	4t, 1b, 6b, 6g, 7g, 1a, 5a, 6a, 4fl, 5fl, 8f, 9f, 10f, 9v, 10v, 19v.
Inside Tanks	1b, 6b, 6g, 4fl, 8f, 9f.
Fresh Water	**Reference**
Potable (including vents, overflows, sounding tubes, inside tank suctions), Sanitary (Grey water)	3t, 5g, 4b, 1a, 2a, 3a, 6a, 1fl, 2fl, 1f, 3f, 4f, 5f, 3fl, 1v, 2v, 3v, 5v, 6v, 7v, 8v, (valve bodies may be used to ASTM B62, trim to ASTM B61)
Circulating (Engines)	5t, 5g, 2b, 6b, 1a, 2a, 3a, 6a, 3fl, 4fl, 5fl, 11fl, 12fl, 8f, 9f, 10f, 11f, 12f, 19f, 20f, 21f, 9v, 10v, 11v, 12v, 13v, 14v, 18v 19v, 20v.
Lubricating Oil	**Reference**
General Service (150 PSIG rating)	4t, 6g, 7g, 1b, 6b, 1a, 5a, 4fl, 12fl, 8f, 9f, 10f, 21f, 9v, 10v, 11v.
Hydraulic Oil	8t, 9t, 1b, 1g, 1a, 6fl, 12fl, 13f, 14f, 15f, 21f, 22f, 14v.
Steam (150 psig)	**Reference**
Feed water, Condensate	3t, 4t, 3g, 1b, 6b, 1a, 1fl, 2fl, 12fl, 1f, 2f, 4f, 5f, 21f, 1v, 2v, 3v, 4v, 6v, (valve bodies may be to B62 trim to ASTM B61)
Compressed Air	**Reference**
3000 PSIG 150º F	1t, 2g, 1a, 17f, 16f, 21v.
250 PSIG, 150º F	5t, 3g, 1b, 6b, 1a, 4fl, 5fl, 8fl, 12fl, 8f, 9f, 10f, 11f, 12f, 21f, 4v, 6v, 9v, 11v, 12v, 13v.
Deck Drains and Scuppers	**Reference**
All *"As Fitted"*	5t, 4b, 6b, 5g, 6g, 4fl, 8f, 9f.

Figure 3-2: Material for Pipe and Tube

	Description	Material	
1t	Tube – seamless (pipe for pressures exceeding 150 PSI)	ASTM B466-79	70-30 CU-NI
2t	Tube, seamless	ASTM B466-79, Alloy 706	90-10 CU-NI
3t	Tube, seamless	ANSI/ASTM B88-78	Copper
4t	Pipe, seamless	ANSI/ASTM A 53 GR A or B Sch 40	Steel
5t	Pipe, seamless	ANSI/ASTM A53 GR A or B Sch 40	Carbon Steel
6t	Tube	ANSI/ASTM A376-79B	Stainless Type 316L
7t	Tube	ASTM B59-78	Low Carbon Steel
8t	Tube, seamless	ASTM A179	Hydraulic Quality Carbon Steel
9t	Pipe, seamless	ANSI/AASTM A376-79B AISI 316	Stainless

Figure 3-3: Material for Valves

	Description	Material
1v	Globe, angle	ANSI/ASTM B 61-76
2v	Pressure Regulating	ANSI/ASTM B 61-76
3v	Pressure Relief	ANSI/ASTM B 61-76
4v	Y Type Strainers	ANSI/ASTM B 61-76
5v	Diaphragm	ANSI/ASTM B 61-76
6v	SDNR and Lift Check	ANSI/ASTM B 61-76
7v	Butterfly	ANSI/ASTM B 61-76
8v	Gate, flanged	ANSI/ASTM B 61-76
9v	Globe, angle and check	Steel
10v	Gate	Steel
11v	Relief	Steel
12v	Pressure Regulating	Steel
13v	Globe, angle, relief, check, control bleeder, ball	Carbon Steel
14v	Globe, angle, gate ball (fire safe)	Stainless 316
18v	Angle, relief	Stainless 316
19v	Butterfly	Ductile iron or cast steel
20v	Assorted	AISI 304, 316/A51M, A 182 Teflon Packing
21v	Assorted	Alloy 642
22v	Sprinkler Control Valves	ASTM B61

Figure 3-4: Material for Fittings

	Description	Material
1f	Brazing	ANSI/ASTM B61 only (ASTM B 150 not to be used)
2f	Flanged	ANSI/ASTM B61 only
3f	Threaded	ANSI/ASTM B61 (125 psi rating)
4f	Unions	ANSI/ASTM B61 only
5f	Solder Joint	Wrought Copper ANSI B16.22
6f	Brazing Bosses	ANSI/ASTM B61 only
7f	Refrigeration	Wrought Copper ANSI B16.22
8f	Butt Welding	ANSI/ASTM A234-WPB
9f	Socket Welding	ANSI/ASTM A 105
10f	Welding Bosses	ANSI/ASTM A 105
11f	Threaded	ANSI/ASTM A 105
12f	Union	ANSI/ASTM A 105
13f	Socket Welding	AISI 316L
14f	Butt Welding	AISI 316L
15f	Flanges	AISI 316L
16f	Brazing	Bronze
17f	Union	Bronze
18f	Butt Welding	90-10 CU-NI
19f	Victaulic Type	Ductile iron for grooved end pipe
20f	Tube Fittings	Stainless steel (Swagelok)
21f	All types of Compression fittings	316L or carbon steel

Figure 3-5: Material for Flanges

	Description	Material
1fl	Brazing	ANSI/ASTM B61 only
2fl	Threaded	ANSI/ASTM B61 only
3fl	Composite	ANSI/ASTM B61 – Brazing Ring, Complete with slip-on flange to ANSI/ASTM A181-77 GR1 and ANSI/ASTM A181-GR1
4fl	Welding neck, Socket, Slip on	ANSI/ASTM A181-GR1
5fl	Extended Welding Neck	ANSI/ASTM A181-GR1
6fl	Welded	AISI 304L, 316L
8fl	Welding Neck Socket	ANSI/ASTM A105-GR-2
9fl	SAE 4 Bolt Split, Solid	Carbon steel
10fl	Composite	Inner flange 90-10 CU-NI Outer flange carbon steel
11fl	Victaulic	Ductile iron for grooved end pipe
12fl	Swagelok Flanges	316L or carbon steel

Figure 3-6: Material for Gaskets

	Description	Material
1g	O-Ring	Buna N
2g	O-Ring	Buna N
3g	Full Face	CAF Non graphite
4g	Full Face	CAF graphite
5g	Full Face	Synthetic rubber, max temp 180º F
6g	Full Face	Buna N
7g	Flat Ring	Teflon
8g	Spiral Wound	Teflon impregnated
11g	Sheet	Ethylene propylene terpolymer (EPT)

Figure 3-7: Material for Bolts and Nuts

	Description	Material
1b	Bolts	ANSI/ASTM A193-79A
	Continuous Thread	GR B16
	Stud or Hex Head	ANSI/ASTM A193-79A
	Tap End	GR B16
	Nuts: Hex, HSF	ANSI/ASTM A194-79A GR4
2b	Bolts	Phosphorous, Bronze ASTM
	Continuous Thread	ANSI/ASTM B139-79
	Stud or Hex Head	Alloy B1 or B2
	Tap End	
	Nuts: Hex, HSF	
4b	Bolts	Mild Steel
	Stud or Hex head	Hot dipped galvanized
	Nuts hex	
5b	Stud Bolts	
	Continuous thread	
	Tap End	
	Nuts: Hex, HSF	
6b	Bolts: Hex Head	ASTM A-307 Cadmium Plated
	Nuts: Hex Head	
7b	Bolts: Hex Head	ASTM A-320 Stainless Steel
	Nuts: Hex Head	

Figure 3-8: Material for Assorted Components

	Description	Material
1a	Pipe Clips	Steel
2a	Orifice Plates	Monel
3a	Strainers	
	Plate Type	ANSI/ASTM B 61-76
	Flat Plate	ANSI/ASTM B 61-76
	Y-Type	ANSI/ASTM B 61-76
	Basket Type	ANSI/ASTM B 61-76
4a	Strainers	Steel
	Y-Type	
	Basket Type	
5a	Strainers	304 Stainless
	Y- Type	
6a	Closure for Sounding Tube	Bronze
7a	Fire hose – Siamese Connection	Bronze

3.2.3 Fire Fighting Systems

Piping for FM200 firefighting systems must comply with the regulations of TCMS and system manufacturer's specifications.

3.2.4 Exhaust Piping

Exhaust piping must be fabricated from materials as specified on the guidance drawings. The flanges must be forged steel 1035 kPa Light Pattern ASTM A181-59T. Expansion pieces must be free flexing with flange joints, one fixed and one free floating flange, internal stainless steel sleeves (Senior Flexsonic™ or equivalent, suitable for exhaust duty at the systems operating temperature).

3.2.5 Piping Fabrication

Flange faces must be on a plane perpendicular to the longitudinal centerline of the pipe, tube or fitting to which they are attached. All components and assemblies of components must be thoroughly cleaned after fabrication and before installation in the ship. Foreign matter such as dirt, grit and shavings, must be removed by methods and materials compatible with the fluids employed in the service aboard ship.

3.2.6 Bulkhead and Deck Pieces

Bulkhead and deck pieces must be steel marine standard three-flange, galvanized for seawater, black for oil. The penetration must be extra heavy pipe. Copper piping must be bronze type with nut on each side of the bulkhead or deck piece.

3.2.7 Joints and Connections

Brazed joints in non-ferrous systems, welded joints in carbon steel and alloy systems must be used to the maximum extent practical. The number of joints must be minimized through the use of pipe bending. For bends 3D radius and below, prefabricated bends must be used. Prefabrication of piping system assemblies must be utilized to the greatest extend practical. Joints fabricated onboard ship must be located in areas that provide adequate clear space for welding and brazing. Takedown joints must be located to ensure sufficient clear space for proper assembly and maintenance. Joints located in areas inaccessible for maintenance must be welded or brazed. All flanged piping joints must be connected using jointing material suitable for the service intended and approved by TCMS.

Throttle valves and valves which operate automatically or semi-automatically such as safety, relief, regulating and governing valves, must be flanged unless of ¾ inch nominal bore or less in which case they may be of the screwed connection.

3.2.8 Contact Strips

All copper joints isolated by joining to other materials must have contact strips securely fitted from flange to flange to give a continuous circuit in the pipe lines.

3.2.9 Hydraulic Piping

Hydraulic piping must be phosphate pickled, neutralized, flushed with oil and blown dry prior to installation.

3.2.10 Identification of Piping

All piping systems must be identified in accordance with CCG Piping Identification Standard CGFM 308.00.03.

3.3 Pumps

3.3.1 General

Pumps, excluding engine driven type, must be supplied complete with electric motors suitable for the power supply specified on the single line diagram. Pump motors and starter characteristics must be as specified under Section 4 of this Specification.

Engine driven pumps must be engine manufacturer's standard supply. Allowance must be made for specific installation requirements when specifying pump performance parameters.

Pump performance characteristics must match the full range of the system(s) to which they are connected. Pumps must operate at or close to their design point. Pumps installed on resilient mounts must have flexible suction and discharge connections that will accept deflections arising from thrust and shock loading.

Radial and thrust bearings must either be of the sliding surface or rolling contact type. The selection of thrust bearings must take into consideration the rolling and pitching of the vessel that may impose axial thrust even where pumps are in hydraulic balance.

Wear rings must be fitted to the casings of all centrifugal pumps. Wear rings must be fitted to all impellers that are driven at a BHP of 10 or greater at rated output. Pump glands must incorporate mechanical seals. Pump casings must have a vent connection at each discharge stage and a casing drain connection.

Pumps operating in parallel must be capable of continuous steady operation.

The major rotating elements of all pumps complete with all connected appendages must be dynamically balanced. Documented proof of this must be supplied to the Inspection Authority.

3.3.2 Centrifugal Pumps

Centrifugal pumps, unless otherwise specified, must have the following characteristics:
Vertical in-line overhung;
Radial split bronze casing;
Stainless steel shaft;
Mechanical shaft seal;
Aluminum bronze impeller;

Renewable wear rings;
Removable shaft spacers;
Bearings lubricated by the pumped fluid in plain bearing applications or grease packed roller bearings.

Pumps must be fitted with the following attachments:
Discharge pressure gauge, liquid filled, with isolating cock;
Compound suction gauge, liquid filled, with isolating cock;
Drip tray;
All applicable guards.

The design of the pump must allow the complete rotating assembly to be withdrawn without disturbing the pipe work.

In cases where the pump discharge head can exceed the design pressure of any part of the connected piping system, pumps must be fitted with a relief valve.

3.3.3 Positive Displacement Pumps

Pumps, unless otherwise specified, must have the following characteristics:

1) Positive, constant displacement, rotary screw;
2) Nodular iron casing, max 18% elongation;
3) Steel power rotor;
4) Integral relief valve, adjustable;
5) Mechanical seal.

Pumps must be fitted with the following accessories:

1) Discharge pressure gauge, liquid filled, with isolating cock;
2) Compound suction gauge, liquid filled, with isolating cock;
3) Drip tray;
4) All applicable guards.

3.4 Valves

All valve bodies must have the pressure rating, size, manufacturer's name or trade mark cast or forged integral with the valve body or stamped in a non-stressed area. Valve hand-wheels must be located where they can be conveniently operated.

Where a system can be supplied by more than one pump, non-return valves must be fitted in the discharge side of each pump to prevent flow reversal.

Check valves and screw down non-return valves must be installed such that the disc will open with the flow and such that disc closure is possible using gravity or by means of springs. Check valves must be installed where reversal of flow would be detrimental to proper function of the system or where that reversal of flow could flood a space.

Globe and angle valves used for isolation must be fitted such that system pressure or vacuum is not exerted on the bonnet joint or stem packing with the valve closed.

Manifolds must be utilized wherever possible.

Safety and relief valves and their piping must be arranged such that their discharges do not damage or endanger machinery, equipment or personnel.

Valves in branch lines must be fitted adjacent to supply main to maintain system integrity in the event of branch line failure.

Butterfly or ball valves must not be used as sea isolation valves. Sea water isolation valves must be as specified CSA Machinery Regulations.

Position indicators are required on all valves having stem rotation of greater than 360 degrees. Exceptions are specific valves where position is obvious from operation of the system or position of the stem (unless required by TCMS).

Check valves must be installed wherever reversal of flow would be detrimental to proper function of the system or where a possibility exists, that reversal of flow could flood a space.

All automatic operating valves such must be sized to meet capacity requirements. They must have the control sensitivity and adjustment necessary for all operating conditions. Where extreme sensitivity is required, pilot actuated or air operated valves must be installed. Manually operated throttle valves and their operating mechanisms must have the necessary sensitivity of control.

Relief valves must be installed to protect pressure vessels, heat exchangers, piping systems, machinery and equipment from damage due to excessive pressure. Relief valves must have sufficient capacity to prevent a pressure increase of more than 10 per cent above maximum allowable operating pressure of the system.

A strainer must be installed in the inlet piping and a pressure gauge in the outlet piping from each pressure-reducing valve. A relief valve must be installed in the outlet piping, except where otherwise stated. The strainer must be upstream of the reducing valve and downstream of the by-pass isolating valve where fitted. The pressure gauge and the relief valve must be downstream of both the reducing valve and the bypass valve. Relief valves must be sized on the assumption that the reducing valve could stick wide open. The outlet piping must be increased in size to meet system flow characteristics. A straight piece of piping, of a length recommended by the manufacturer of the reducing valve, must be installed at the large end of a tapered fitting. A by-pass must be installed around each reducing valve, unless otherwise specified. The valve in the by-pass must be a manually operated throttle valve that must not permit a greater flow than the reducing valve's capacity.

Relief valves must not have a packed stem stuffing box. Relief valves discharging to pump suctions or vacuum piping must not be fitted with rubber or neoprene stem sealing sleeves. Enclosed spring design with tight covers must be used for the following services:

1) Discharge to a closed system or tank that subjects the valve outlet to a back pressure when the valve is closed;
2) Discharge to a closed system or equipment that subjects the outlet to sub-atmospheric pressure when the valve is closed;
3) Flammable or combustible liquids;

4) Toxic and explosive gases.

All valves over ¾" inch must have flanged connections. All valves over 1½ inch diameter must have bolted bonnet, gland and screwed type renewable seats.

Nameplates identifying the service must be installed on all new or relocated valves as specified under Section 2.9. Valves installed under deck plates must be provided with hinged access covers. Nameplates must be fitted on the deck plate.

3.5 Machinery Insulation

3.5.1 General

New, class approved, non-asbestos containing insulation must be installed on all sections of piping, machinery and equipment where insulation was removed and all newly installed equipment requiring insulation. Valves and fittings must be insulated with material and thickness required for adjacent piping. The Contractor must submit a complete lagging and insulation schedule to the Technical Authority and the Inspection Authority for review 48 hours prior to ordering any material. All insulation and lagging must meet the applicable Regulatory Body requirements.

Piping and units of equipment with design internal temperatures of more than150 degree C must be insulated from their supports or the supports insulated from the structures to which they are attached.

Piping hangers for piping with internal temperatures below 5 degree C must be insulated from the steel structure to which they are attached. Piping exposed to the weather must be effectively insulated against freezing. This requirement does not apply to systems in which a fluid is normally flowing or where the exposed portion of a respective system can be secured and drained to prevent freezing.

Where possible, insulation materials must be from one manufacturer.

3.5.2 Lagging

New, class approved, non-asbestos containing lagging must be installed. Lagging (protective covering or coating over insulating materials) must be suitable for temperature and location and must be either of the following:

1) Fibrous glass cloth, tape and thread, Flextra™ or equivalent
2) Aluminum mechanical protective guards, plain or hammered, secured with quick release fasteners.

Piping and/or equipment insulation not exposed to weather must be covered with either a cloth or tape type lagging, when not of the pre-lagged type. Cloth type lagging must be secured by an adhesive or by sewing. Lagging in tape form must be applied spirally wound with not less than 3/8-inch overlap and with ends fastened to the insulation and/or lagging by adhesive, stitching or stapling. Insulation and cements used for lagging purposes must comply with CGSB 51.9-92

and CAN/ULC-S102-M. Links: https://www.scc.ca/en/standardsdb/standards/4810 and www.scc.ca/en/standardsdb/standards/25790.

Insulation, insulation jackets, canvas, fiberglass mat and wrapping and adhesives must be fire retardant with a flame spread rating not greater than 25 and a smoke development rating not greater than 100 when tested in accordance with CAN/ULC S102-M.

Insulation on piping and/or equipment exposed to weather or excessive moisture must be protected by the application of ¼ thick, weather resistant type coating thereon and secured in place prior to application of its lagging. Cracks and/or openings in the continuity of the completed coating lagging, especially at valves, flanges and fittings, must be avoided to prevent entrance of moisture, spray and/or water. In way of deck penetrations, insulation must be protected by a 6-inch high steel kick guard, welded to the deck and covered by the same insulation coating.

In locations where the completed insulation and lagging are liable to abuse, protective galvanized sheet metal lagging of No.2 USSG must be installed. Where protective metal lagging is subject to frequent removal when servicing machinery, it must be plain or hammered aluminum secured by quick release clips.

3.5.3 Securing Arrangements

All insulation materials must be secured to prevent settling and to permit ready removal for maintenance of equipment.

All high temperature piping systems must be insulated using reusable pre-made covers of the following materials, from pipe surface outwards:

1) Monel mesh;
2) Fiberglass mat, approximately 9-lbs/cu.ft density and must contain no chemical binder and be resistant to service temperatures up to 450 degree C;
3) Foil-lined silicone-coated fiberglass lagging secured to insulation by stapling: all edges are to be sealed.

Covers must have stainless or Monel clips, secured by through-hooks around which stainless steel lacing wire can be wound for mounting and securing.

The insulation, with all joints tightly butted, must be secured to the pipe at ends with not less than two metal bands per section, minimum ¾ inch wide, with quick release clips.

Where pipe insulation abuts flanges and fittings, the ends of the insulation must be tapered to permit removal of bolts.

3.5.4 Insulation Thickness

Surface temperature of insulation must not exceed 150 degrees F. The maximum temperatures must determine the thickness of insulation and must correspond to 10% overload of a respective machine or engine. Where the total required thickness of insulation is greater than 1 inch, double layers must be used. These layers must be of equal thickness. All laps must be staggered and all end joints must be overlapped.

3.5.5 Insulation, Anti-condensation

Cold-water piping and equipment, including sewage pipes, must be insulated with anti-sweat type insulation. Anti-condensation insulation, other than elastomeric, foamed plastic type, must be covered with cloth lagging or tape lagging secured with adhesive to form a moisture proof finish. Anti-condensation insulation must be protected by lagging or protective screening as required where there is a potential for damage.

Where piping or tubing pass through the galley or other high humidity spaces, the insulation must be double layered and water proofed outside each layer.

3.5.6 Insulation, removable/reusable covers or pads

All flanges, flange fittings, flexible joints, expansion pieces or any components of machinery or piping susceptible to takedown for inspection and maintenance must be covered by removable, reusable cover or pad. They must be made of the same material as the main pipe insulation. Voids between pads and fitted insulation must be filled with pieces of applicable felted material, tight enough to prevent airflow.

3.5.7 Ducting

All ductwork must be insulated with minimum 2 inches thick vapor seal duct insulation with factory applied vapor barrier (Manson AK Flex™ or equivalent). Vapor barrier dam must be Chil-Perm™ CP30 with fiberglass cloth reinforcing or equivalent. Two (2) layers of canvas mat wrap, 16 oz weight, must be applied with Bakor™ insulation cement or equivalent as a final finish for all ducting. Alternative products may be used with approval of the Technical Authority.

Air duct penetrations must be sealed with non-shrink/hardening silicone based caulking.

3.6 Machinery Space Outfit

3.6.1 General

Machinery spaces must be outfitted with ladders, gratings and floor plates, providing access at convenient levels to all items of machinery for routine operation and maintenance.

3.6.2 Floor plates

Floor plates must be of 20 lbs. multi-grip aluminum tread-plate, supported on steel bearers and secured by ½ stainless steel counter-sunk screws at sides. Panels must not exceed 4 foot by 6 foot. Smaller portable plates must be provided wherever frequent access is required. Portable hinged openings must be arranged over valves, cocks, and strainers and identified with brass nameplates. Open boundaries must be bordered by upturned angle, except in way of low access openings in machinery. Bearers for floor plates must be painted. Bearers must be provided to allow for supporting machinery weights during refits (600 lbs. safe concentrated loads).

3.6.3 Guards

Guards must be provided over all rotating drives accessible to personnel. They must be light weight, and portable. Open guards must be of the rolled expanded metal, closed guards of steel or aluminum. The guards must allow visibility of drives and dissipation of heat. Access must be provided at the centers of shaft lines.

3.6.4 Sea Suction and Overboard Discharges

All new sea suctions and overboard discharges must be made of steel plate as used for the hull and protected by means of sacrificial anodes. All components must be given a full hull coating system.

3.6.5 Sea Isolation Valves

Each sea suction line must have a sea isolation valve fitted as near the sea inlet as practicable. Sea suction valves must be Classification Society approved, cast steel with stainless steel trim.

The valves must be attached by means of bolts to a steel pad with blind tapped bolt holes which has been welded directly to the ship's hull or sea chest. If it is not possible to attach the valve directly to the hull or sea chest, TCMS approved extension pieces must be installed between the valve and steel pad. The extension piece must be as short as possible and must have no joints other than to the valve and pad.

Sea isolation valves must be of the high lift globe type. High lift angle valves may be used if globe valves are impracticable. The minimum size of fasteners used for connections on the sea-side of isolations valves must be ¾ inch. The bolting material of fasteners must be phosphor bronze to ANSI/ASTM B139-79 alloy B1 or B2.

Where a pump or eductor, having direct sea suction, is located in a compartment remote from the sea isolating valve, an additional sea-isolating valve must be located within the pump compartment.

3.7 Machinery Instrumentation

3.7.1 Pressure/Suction Gauges

Unless otherwise specified, only 4½ inch diameter or bigger gauges must be used for instrumentation.

All gauges with pressure exceeding 1000 PSI (7000 kPa) or those used with compressible fluids must be safety gauges with back blow outs.

All gauge lines must have a capped test tee. All gauges must have needle type isolation valves. Pulsation dampers must be fitted to keep gauge pulsation below 5 % full scale. Gauge indication must be at ½ or 2/3 of its range respectively for fluctuating or steady state working pressure.

All pumps must be fitted with suction compound and discharge pressure gauges.

All refrigeration compressors must be fitted with suction and discharge pressure gauges and Schroeder valves must be fitted at the gauge lines for the connection of portable refrigeration gauge manifolds.

All new gauges must read in both imperial (PSI) and metric units (kPa or Bar). The dial face must be white with black figures and the pointer must be of the micrometer adjustable type. Gauge movements must be stainless steel with stainless steel bushings and over-pressure and under-pressure stops. Bourdon tubes must be bronze or 316 stainless steel with brass or 316 stainless steel sockets. Gauge accuracy must be ±0.5% of scale range, ASME B40.1 Grade 2A. Gauges must be filled with glycerin or silicone according to ambient temperature requirements or severity of vibration expected.

3.7.2 Temperature Gauges

Unless otherwise specified all thermometers must be a standard 9 inch scale thermometer with a universal adjustable angle stem, cast aluminum case with cured polyester powder coating, clear window and brass separable thermo well. Thermometers must be fitted with an acrylic window to 300 degrees Fahrenheit and a double plated safety glass at temperature ranges above 300 degrees Fahrenheit.

All thermometers must be housed in a 304 or 316 stainless steel thermo well to allow removal of the thermometer without disturbing the measured process. The thermometer and thermo well must extend at least ½ the pipe diameter into the measured process. Where thermometers are installed in pipes fitted with insulation, longer stem thermometers must be used with extension neck separable thermo wells. Extension necks and must be at least 2” long.

Thermometers for measuring air temperatures must be fitted with a perforated guard stem and a mounting flange instead of a brass separable thermo well.

All thermometers must contain red spirit fills. Range selection for thermometers must be so that the operating temperature of the measured process will fall approximately mid-scale. The scale face must be white with black figures and must contain dual reading scales, Fahrenheit and Celsius. Thermometer accuracy must be ±1 scale division.

3.8 Equipment Foundations

Steel and/or aluminum foundations must be fitted for all machinery, pumps, motors and all new and relocated equipment. Foundation scantlings must be of adequate strength and thickness and approved by TCMS where required. Additional stiffening must be fitted where required to distribute loads and reduce vibrations.

Save-alls must be fitted around any hydraulic system and pump installed during the vessel life extension.

Insulation must be provided between ferrous and non-ferrous materials and/or equipment.

3.9 Anti-Vibration Mounts for Equipment

All main engines and ship service generator sets must be mounted on anti-vibration mounts. The Contractor must coordinate the mounting requirements of the equipment with the equipment supplier and/or manufacturer taking into consideration the following information:

1) Weight of the combined equipment complete with sub-base;
2) Center of gravity of the equipment;
3) The requirement to limit vertical, longitudinal and lateral motion of the equipment to minimize impact on ancillary systems and services while maintaining the required isolation.

Anticipated motions of the vessel are defined in Section 2.1 of this Specification; Vibration mounts must provide between 75 to 85% isolation of all equipment generated vibration to the hull structure.

Vibration mounts must be fitted with a shock-proof device with resilient stop to withstand up to 5g of acceleration. Vibration mount metal parts must be corrosion protected with Fe/Zn 8C as per ISO 2081 for the marine environment. The resilient mounts must be protected with a cover to prevent contamination of the damping elements.

3.10 Hull – Structural

Structural integrity must be preserved and any questions involving such integrity must be referred to TCMS for resolution.

All welding must be performed to the requirement of the CWB Welding Standard and/or the Classification Society Rules whichever is more stringent.

New structures and where permanent removal of fittings will result in the necessity of fitting insert plates in shell plating, watertight bulkheads and/or watertight decks, the following procedure must be adopted:

1) The Contractor must prepare and submit a CWB engineer approved welding schedule for approval by TCMS;
2) All inserts on shell plating must be flush;
3) All underwater inserts must be subject to 100% radiography on completion;
4) New tanks and existing tanks and void spaces and where inserts have been fitted must be hydrostatically tested to a head of water of 2.5 meters. The tests must be recorded, witnessed by TCMS and the Inspection Authority;
5) Location of any new insert plates must be noted on the vessel's Shell Expansion Drawing.

4.0 ELECTRICAL AND ELECTRONICS

4.0 General

The requirements specified in this section apply to all electrical work. The electrical modifications to the vessel must be in accordance with TP 127E and IEEE 45 STD -2002 with approval by TCMS.

All electrical/electronic equipment, fittings and fixtures temporarily removed for access must be reinstalled and secured and the areas restored to the "As Delivered" condition.

The Contractor supplied equipment must conform to the requirements of IP56, IEC 60529 and Section 2 Physical Operating Conditions for Equipment of this specification.

The Contractor must make reference to Section 6 for documentation requirements concerning the electrical system.

Electrical conducting surfaces, heat transfer surfaces and ventilation screens must not be painted. Such areas must be protected from dirt and debris including painting overspray during the contract.

The Contractor must remove all electronic equipment from compartments in which work such as cutting, welding grinding, etc. is being performed. The Contractor must obtain the Technical Authority's approval for equipment that will remain in place and such approval must require the equipment to be protected from all possible hazards.

4.1 Electrical Single Line Diagram

The Contractor must maintain an updated Single Line Diagram and an electronic copy must be provided to the Inspection Authority and the Technical Authority at monthly progress reviews and with each design change which has a significant impact on the electrical system as decided by the TA.

The final "As Fitted" electrical single line diagram must be TCMS approved.

4.2 New Rotating Machinery

Motors must be commercial marine quality meeting all regulatory requirements. Motor enclosures for installations must conform to IEC 60529. www.nema.org/Standards/.../ANSI-IEC-60529.pdf . Motors must be continuously rated except for deck machinery where one (1) full rated load, and continuous light running load are applicable.

All motors must have their windings covered with a class F insulating material, resistant to oil and water, and must operate in an ambient temperature of 50 Degree C when installed inside machinery spaces and 40 Degree C when installed on enclosed decks. For motors operating on the open deck, the low ambient temperature must be considered as - 40 degree C. Temperature

rises, as measured by thermometer after an 8 hour heat run must not exceed those stated in TCMS, TP 127E Class B.

Rotating machinery with enclosed slip rings or commutators must not have any form of silicone-impregnated material incorporated into their windings, or introduced into the enclosure.

Any rotating equipment incorporating brushes must be fitted with inspection windows.

All A/C motors rated in excess of 0.37 kW (1/2 HP) must be of squirrel cage induction type, rated for continuous duty and capable of reaching design parameters at 600 Volts, 60 Hz, 3 phase, unless otherwise specified. Induction motors of 0.37 kW rating and less may be designed for operation on 120 Volts, 1 phase.

Particular care should be exercised in the selection of induction motors to ensure that each motor is not too large for the intended service and thus avoid the low power factor inherent in under-loaded induction motors.

Single speed induction motors must be of a 4-pole 1800-RPM, unless otherwise specified.

Motors of 0.18 kW (1/4 HP) and over must be equipped with anti-friction bearings designed to meet the imposed thrust and radial loads. Where motors are used with solid couplings a bearing to take thrust must be fixed to the shaft end housing, and shaft endplay limited to the clearance in the bearing. Tandem ball bearings must not be used for axial thrust loads.

Motors equipped with anti-friction bearings using pressure grease fittings must have positive means, either by relief plugs or fittings, or by a clearance differential relief system, to prevent grease from being forced out onto the motor windings.

Where anti-friction type bearings (ball bearings) are specified for rotating electrical machinery, they must:

1) Be rated and suitable for the type of drive;
2) Be noise tested;
3) Be of the deep groove type where the drive introduces end thrust;
4) Be of the pre-lubricated type, unless otherwise specified.

Axial flow fan motors must be equipped with factory sealed pre-lubricated ball bearings or factory sealed pre-lubricated ball bearing housings. The bearing housing must not be drilled.

Motors for V-belt applications must have their bearings designed for this purpose.

Motors rated above 0.75 kW (HP) must have their rotor both statically and dynamically balanced. All windings must be vacuum pressure impregnated followed by oven curing. Attention must be paid to the elimination of dust and dirt traps within both windings and the

motor enclosure. Records of the static and dynamic balancing must be submitted to the Inspection Authority and the Technical Authority 24 hours prior to installation.

Induction motors driving ventilation fans or pumps requiring both high and low operating speeds must be of the 2 speed 2 winding type with the top speed not greater than the 4 pole design, unless otherwise specified.

The Contractor must confirm all pertinent characteristics of replacement motors prior to procurement and to ensure compatibility with requirements of retained machinery.

Before placing any purchase orders, the Contractor must submit for review and approval to the Technical Authority a list of all electric motors to be installed. The list shall be provided to the TA prior to the order being placed for a minimum of 72 hours. This list must detail the following:

1) Manufacturer's name;
2) Duty/service factor;
3) kW and full load speed;
4) Enclosure type;
5) Efficiency;
6) PF for full, ¾ and ½ load (A/C motors);
7) Locked rotor torque and current;
8) Weight;
9) NEEMAC design characteristics;
10) Insulation Class;
11) Full Load Current;
12) Temperature rise class;
13) Voltage;
14) Frequency;
15) Frame size.

4.3 Anti-Condensation Heaters

Black heat, tubular or strip type space heaters must be fitted to all new motors and generators rated 15 kW or larger and to electric equipment installed in open decks or in damp or unheated spaces where specified. These space heaters must be arranged for operation from a separate supply. Heaters must be suitable for operation from 120/1/60 VAC.

A rated interlocking arrangement must be provided at the equipment control station to ensure that the heater is de-energized when the respective equipment comes into service.

Visual ON/OFF status indication must be provided at the equipment control station as detailed:

1) For motors on their respective control station or local starting panel;
2) For electrical control equipment on the relevant panel.

Isolation switches or control station disabling arrangements must be provided at equipment requiring local maintenance where the feeder breaker is not in sight. The isolating switch or lock-out station must be within sight from the protected equipment.

4.4 Electrical Nameplates

All electrical equipment must be fitted with nameplates. Each nameplate must identify the piece of equipment and in addition must include the manufacturer's name, type, serial number, model number, rating and date of manufacture.

Any special precautions, maintenance or operating instructions must be included on the nameplates or on a separate plate attached to the equipment.

All electrical equipment and compartments housing hazardous voltages must carry a warning notice indicating that a hazard exists and specify the maximum system voltage.

Switchboards must have nameplates listing:

1) Name of switchboard;
2) Manufacturer;
3) Serial number, if applicable;
4) Date of manufacture.

Each circuit breaker must have a nameplate showing the name and designation of the circuit and the setting of the breaker. Instruments, switches, etc., on the switchboard must be adequately marked with their function and designation as well as a red line at the full load or normal operating value.

Distribution panels must have nameplates showing:

1) Space, service, apparatus or circuits controlled; feeder designation.

Internally, switchboards, distribution panels and motor controllers must have marking plates identifying bus bars and terminals. Bus bars must have phases identified by color- coding.

Electrical enclosures that house a multiple of electrical or electronic equipment and devices must have a unique identification code for each device and the device must be labeled as such. Mechanical layout drawings of the enclosures must clearly show the layout and identification code of the devices within the enclosure.

Terminal blocks and terminal wiring must be marked with the circuit designation and must be treated as devices within enclosures. Terminal blocks must be labeled consecutively and ascending from left to right and top to bottom.

Nameplate size and other characteristics must comply with Section 2.

4.5 Cables

All cables must meet TP127E requirements, be manufactured, tested and installed in accordance with the latest TCMS Publication, IEEE and Classification Society requirements.

The Contractor must develop a schedule of all new electrical cables to be installed and existing cables to be reused. The following must be listed for each cable:

1) Conductor size;
2) Current rating;
3) Estimated length;
4) Identification number and name of manufacturer;
5) Approximate weight;
6) Voltage drop;
7) Insulation level (voltage);
8) Insulation type designation and maximum allowable temperature.

This schedule must be submitted for review and approval to Technical Authority 48 hours before any cables are installed and/or removed. The schedule may be submitted in sections as the detailed design develops.

New cables must not be spliced. Splicing in existing cables of 600VAC or less cable may be permitted with prior permission of TCMS providing splices are performed in accordance with TP 127E. Radio frequency co-axial cable must not be spliced. In-line connectors must not be used in such cables other than as required to terminate the cable. All wire and cable terminations must be accordance with TP127E.

Where cables enter drip proof or watertight cubicles, motors, or other equipment, TCMS approved glands and/or strain relief devices must be used. Cable entry into drip proof enclosures must be from the bottom or side of the enclosure. Where cables enter the side of an enclosure, they must run downward from the cabinet before running in an upward direction.

Where cables enter the side of an enclosure, they must run downward from the cabinet before running in an upward direction.

A minimum of 15% spare space must be provided on each new raceway and on all modified cable runs.

Cables must be concealed, except in machinery spaces, workshops, and storerooms. The location of cable runs, connection boxes, hangers, etc., concealed by paneling or linings must be clearly indicated on the “As Fitted” drawings. Concealed connection boxes must have the circuit designation stamped or painted on a part of the box not subject to being removed.

All permanently installed cables must be tagged with the circuit designation at all points of connection and on both sides of bulkheads and decks. Tags must be of metal compatible with the cable sheathing. Both ends of the tags must be strapped to the cable with metal strap after all painting has been completed. Straps must pass through holes in the tags so that tags are positively secured. Strap ends must be permanently folded and crimped.

Adhesive or permanently printed plastic identification tags for individual cables and conductors may be used inside equipment cubicles and equipment racks.

All conductor identification markings and cable tags must be reflected in the "As Fitted" system drawings and must be as follows:

1) Cable tags must be printed with indelible ink and must not be handwritten;
2) Each cable must have an identifier unique to the installation;
3) Each cable tag must have the following information: unique cable name and location for each end, and;
4) Conductor identification markings must be secured to the conductors to prevent them from becoming disassociated from the conductor when it is terminated to a device.

Spare conductors within a cable must not be stripped back or shortened and must be tied back and appropriately marked as spare. Control cables and cables for the alarm and monitoring system must contain a minimum of 10% spare conductors. Shielded control cable must have the shield bonded to ground at one end of the cable run only, preferably at the input signal end. The cable must not be grounded at both ends.

To avoid mutual interference, cables must be grouped and separated as specified per Figure 4-1. If the spacing is impractical, additional shielding must be provided as approved by TCMS.

Low loss co-axial cables of correct impedance must be used for co-axial cable antenna feeders.

Where foam core dielectric cables are used, crimp shield connectors must be fitted. The Contractor must not use solder type connectors.

The routing of new ship service generator cables must be as direct as possible and such cables must be run on the wire ways carrying existing generator cables or if this is impractical, then on wire ways specifically designed for this purpose. When taking generator cables to their respective machines, provision must be made for sufficient slack to permit the machine to be subsequently disconnected and reconnected without damaging the cable.

4.6 Separation of Cables

The Contractor must refer to Figure 4-1 indicating the physical separation to be maintained between various categories of cables. The separations do not apply to cables crossing at, or close to, right angles. Cables of all types must be kept well separated from antennas, antenna couplers and feed wires. Deviations must be pre-approved by TCMS and the Technical Authority and Inspection Authority must be provided documentation of the approved deviations.

Cables may be bundled according to their categories in Figure 4-1 and the following guidelines:

1) Cables from group A to group E inclusive may be bundled with cables from the same group and share a common wire way with the remaining groups;
2) Bundling of cables from Group F to Group K should be avoided and, if necessary, additional screening material should be provided;
3) Cables in Group F to Group K should use separate wire ways wherever possible.

Figure 4-1: Recommended Cable Separation (inches)

Cable Group	Cable Group Classification	Recommended Inter-Cable Group Separation in inches									
		A	B	C	D	E	F	G	H	J	K
A	Ship's power and lighting	-	4	2	2	4	12	18	18	18	18
B	Receiving antenna cables	4	-	4	2	2	12	18	18	18	18
C	Electrical control cables	2	4	-	2	4	12	18	18	18	18
D	TV/VHF antenna distribution cables	2	2	2	-	2	12	18	18	18	18
E	Telephone/audio distribution cables	4	2	4	2	-	12	18	18	18	18
F	Echo sounder transducer	12	12	12	12	12	-	18	18	18	18
G	Transmitter/antenna coupler feed cables	18	18	18	18	18	18	-	18	18	18
H	Antenna coupler/antenna cables	18	18	18	18	18	18	18	-	18	18
J	VHF/UHF transceiver/antenna cables	18	18	18	18	18	18	18	18	-	18
K	Radar transceiver co-axial/wave guide	18	18	18	18	18	18	18	18	18	-

4.7 Circuit Breakers

Breakers must be equipped with individually insulated, braced and protected connectors. Tripped indication must be clearly shown by the handle at a position between ON and OFF and/or a visual trip indicator.

All breakers must be rated for the application with due consideration to voltage, amps, interrupting rating, number of poles, auxiliaries, etc, as determined by the final approved “Short Circuit Current Analysis” (4.4) and selected as per the co-ordination study.

Breakers must be calibrated at 50°C.

Breakers must be suitable for marine application;

1) Be the molded case type;
2) Be rated for 600VAC, 240 VAC or 120VAC;
3) Be the quick make/quick break type;
4) Have inverse time over current characteristics;
5) Have overload device in each phase.

4.8 Motor Controllers

Motor controllers must be for marine duty. Motor controllers and contactors controlling machines which require continuous operation, must be fitted with low voltage release complete with timing circuitry, adjustable from 0.5 to 10 seconds, which must restart all running motors in case of a short duration power interruption.

Motors 30 kW and above must be equipped with solid-state reduced voltage starters (soft starts) to limit the inrush current.

Individual starters controlling 3-phase AC motors must conform to the latest edition of TP 127E and IEEE STD 45-2002 and must be:

1) Fitted with a means of locally isolating the motor where the starter is not located adjacent to the motor;
2) Fitted with indicating lights at the starter to indicate the state of the isolating switch;
3) Fitted with molded case type circuit breaker for each motor circuit to isolate the power supply and provide short circuit protection. The circuit breaker must have means to indicate its status locally and auxiliary contacts for remote monitoring;
4) Fitted with two indicating lights: one to show when the associated motor is operating and one to show when it is stopped;
5) Indicating lights must be LED type;
6) Fitted with drip proof or watertight type START and STOP pushbutton;
7) Fitted with one (1) externally operated, overload reset button mounted in the front, for all three overload relays;
8) Fitted with auxiliary contact to operate anti-condensation heaters where required;
9) Arranged for bottom cable entry through glands;
10) Fitted with an ammeter with selector switch for individual phase amperage readings for motor ratings of 20 kW and over.

Where alarm indication lights are provided at the local control station, facilities must be provided for a lamp test.

Where alarm buzzers are provided at the local control stations, facilities must be provided for buzzer mute.

Starters controlling single phase motors less than 0.37 kW, unless they are for automatic duty, may be totally enclosed, double pole, manually operated, marine type switches, complete with overloads, provided the required protection is included within the switch enclosure.

All internal wiring must be permanently numbered. Numbering must be included in schematic and wiring diagrams to be supplied under the “As Fitted” requirement. Each motor controller or starter must have a wiring diagram mounted on the inside of the door or cover.

A schematic diagram for each starter must be submitted to the T/A 48 hours prior to installation. In the event that a number of motors have the same control schematic, the submission of one drawing shall suffice providing that it is cross-referenced with a table listing the conductor identification for each circuit.

The Contractor must submit for review and approval to the Technical Authority, a list of all motor starters for motors to be fitted during the vessel life extension within 10 working days after contract award. This list must detail the following:

1) Manufacturer's name;
2) Duty;
3) Type of starter;
4) Type of protection – over-current under voltage;
5) Weight;
6) Enclosure;
7) Schematic wiring diagram;
8) Starter size.

4.9 Transformers

Where a 3-phase bank of transformers is required, it must be made of three (3) 1-phase transformers connected delta/delta, except where specified otherwise. Transformers must be fitted with electrostatic shields.

In general, the following principles must apply to transformers:

1) Be of the single phase type (unless otherwise specified);
2) Be suitable for 3-phase operation, delta/delta;
3) Be suitable for bulkhead and/or deck mounting up to 50 kVA and platform or deck mounting above 50 kVA;
4) Be of the air cooled type;
5) Have a drip proof enclosure with louvers;
6) Have a winding insulation of Class F or better;
7) Have final operating temperature not exceeding Class B temperature rise;
8) Have +/- 2 ½ % and +/- 5% taps on all primary windings (2 FCAN and 2 FCBN);
9) Be supplied with copper windings;
10) Be built in accordance with the latest edition of TP 127E and IEEE 45 STD - 2002;
11) Sound levels must be at or below the latest CSA standards;
12) Transformers must have nameplates consisting of the following:
    a) Manufacturer’s name;
    b) Rating in kVA;
    c) Rate full load temperature rise;
    d) Primary and secondary voltage ratings;
    e) Frequency in Hz;
    f) Rated impedance;
    g) Noise level.

Where a transformer may be de-energized for relatively long periods of time, the transformer enclosure must include a space heater as specified in Section 4 Anti-Condensation Heaters. Space heaters must be capable of raising the internal temperature to, and maintaining it at 5 degree C above ambient. The Technical Authority may waive this requirement providing the transformer is located in a dry heated space.

The Contractor must supply to the Inspection Authority and the Technical Authority TCMS approval certificates for all transformers with a 15 kVA rating or greater 48 hours prior to the installation of the transformer. Certification documentation must be as per Section 6.2.5 of this Specification.

4.10 Electronic Equipment Installation

The Contractor must prepare layout drawings showing the location of electronic equipment at both rack/console as well as the compartment level. These must be prepared for all compartments containing electronic equipment. An Antenna Layout Diagram must also be prepared where necessary.

The Contractor must prepare drawings based upon the manufacturers' installation data showing the electrical details of the installation of each electronic system, e.g., cable details such as identifier number and type, connector detail, power supply detail. Point connection detail must be supplied separately but the drawing must reference the source.

The Contractor must provide a device list showing all device information and associated parts manufacturer data. Where devices are software and/or hardware configurable, such as DIP switches and device memory settings, the Contractor must record and provide all software and hardware configuration settings along with the device documentation to the Technical Authority and the Inspection Authority in an electronic format that is editable.

Each field device within each discrete field location must be uniquely identified. This identification must correspond to the identification for the field device used within all other documentation.

Field device identification labels must contain the following information:

1) Location of field device;
2) Primary drawing associated with field device.

The intent of the field documentation is to provide a system by which all devices have a unique identifier thus allowing the cross referencing of all related OEM data, device specific configuration settings, schematic drawings, and electrical connections to a specific device within the system.

4.11 Safety Switches

Each piece of electronic equipment must be capable of being switched off locally. This may be achieved by means of a normally provided front panel switch. For equipment not provided with such a feature and which is remotely activated, a local ON/OFF safety switch must be provided.

Where any electronic unit or terminal box is obscured by ceiling tiles or liner board, access to the obscured equipment must be provided. The access panel must be clearly and permanently marked with the identity of the obscured equipment as detailed in Section 2.Identification, Nameplates.

4.12 Rack/Console Mounting

Rack and/or console mounting is the preferred method for the mounting of electronic equipment. The Contractor must supply racks and/or consoles required to mount the electronic equipment.

Racks and/or consoles must be all welded steel construction and must be well secured in a vertical position. The rack/console must be properly braced to meet the shock and vibration requirements of Section 2. Vibration.

Racks and/or consoles must be designed for the retractable, slide mounting of standard 19 inches (483 mm) electronic equipment to an equipment depth of 24 inches (600 mm). Console height should be the maximum consistent with its purpose and surroundings.

The mounting slides must be of 2-piece construction with one piece attached to the rack, the other piece to the equipment. A means must be provided to prevent cable snags during slide insertion and/or withdrawal.

The racks must be designed with removable side panels. Racks must be arranged so that adjacent racks may be bolted together without interior side panels. Racks must be given to racks that are easily adapted for forced air ventilation.

The mounting of equipment must be by means of the retractable slides. Any equipment not mounted in this way must be supported from below. Equipment must be retained in the rack by front panel retaining screws. The retaining screws must be standardized for maintenance reasons.

Heavy equipment must be located at the bottom of the rack while lighter equipment without front panel controls, must be at the top. Equipment requiring frequent maintenance or control actions must be mounted in the center portion.

4.13 Bulkhead/Tabletop Mounting

Equipment mounted upon bulkheads must be secured, either directly or indirectly to the ship's structure. Under no circumstances must any equipment be supported on linerboard or ceiling panels.

Tabletop mounting of equipment is acceptable but the use of windowsills must be avoided unless approved by the Technical Authority. Maximum use must be made of the manufacturers' standard mounting accessories. All mounted equipment must be oriented to best serve the operator.

All bulkhead and tabletop mounted equipment must have its equipment cases bonded to the ship's metal structure.

4.14 Overhead Mounting

The overhead mounting of electronic equipment must be avoided and used only when alternative methods of mounting are impractical. The method must be by means of an overhead console, securely fixed to the ship's structure and designed to provide ease of maintenance access. The installation of any such overhead console must be such that there is no threat of personal injury. All equipment so mounted must be bonded to the ship's hull.

5.0 ELECTRO-MAGNETIC INTERFERENCE

5.1 General

The Contractor must identify sources of electromagnetic interference caused by the installation of equipment and for the subsequent suppression of the interference.

The following standards contain the acceptable limits for the specified frequencies of RF current and for radiated fields:

- IEC No. 60533 ed 2.0, en 1999; Electrical and electronic installations in ships - Electromagnetic compatibility
- BS 5260:1975 Code of Practice for Radio Interference Suppression on Marine Installations, complete with the Code of Practice for Immunity;
- Appendix 7 of IEEE 45 std-2002, Recommended Practice for Electrical Installations on Shipboard. https://law.resource.org/pub/us/cfr/ibr/004/ieee.45.2002.pdf

5.2 Limits of Interference

Separate limits are defined for radiated interference, i.e., transmitted through the air; for conducted interference, i.e., transmitted by wire. Each type of interference has different levels allowed above and below 15 kHz.

5.2.1 Radiated Interference (30 Hz to 15 kHz)

The acceptable limits of interference for frequencies between 30 Hz and 15 kHz and methods of suppression as specified in British Standard No. 1597:1985, “Specification for limits and methods of measurement of electromagnetic interference generated by marine equipment and installations”.

5.2.2 Radiated Interference (above 15 kHz)

The radiated interference level must be measured at the input terminals of the receiver system, with the feeder disconnected at the antenna, and connected to a properly screened matching resistor. Under these circumstances, the interference level must not exceed 2 microvolts.

5.2.3 Conducted Interference (30 Hz to 15 kHz)

Measured at the incoming terminals of an electrical distribution panel, the level must not exceed 3% total distortion of the supply waveform. When measured at the electronic equipment terminals, it should not exceed 1% total distortion. Total distortion is defined as the ratio of the root sum square value of all interfering voltages to the root sum square value of the fundamental and all interfering voltages.

5.2.4 Conducted Interference (above 15 kHz)

Voltage interference levels measured at the terminals of any single piece of electrical equipment must not exceed the levels given in the Department of Communications Circular No. S11-10-47, Interference Suppression in Marine Craft.

Class 1 limits must apply where equipment or cables are poorly screened, such as:

- Above decks in general, unless proper screening has been used;
- Where close coupling exists between the affected equipment and their associated cables.

Class 2 limits must apply in well-screened situations, such as:

- Within the metallic structure of the vessel;
- Where screening has been specially provided.

Measurements must be made using instruments compliant to Canadian Standard C108.1.1. www.scc.ca/en/standardsdb/standards Measurements should be made under the worst-case conditions.

5.3 Interference Suppression

Interference must be suppressed at its source or receiver using the following guidelines:

Any sensitive electronic equipment must be housed in a tested and certified enclosure which must provide at least 40 dBm of shielding for the onboard electromagnetic environment;

1) The minimal cable separations must be observed;
2) If capacitors are used, they should be on the equipment side of any isolating switch or the capacitor must be provided with an uninterruptible leakage path;
3) Capacitors must not be used to suppress arcs across electrical contacts;
4) Components in metal boxes must have the boxes bonded to the metal of the interfering source;
5) Electro statically shielded isolation transformers and/or suitable power line conditioners must be fitted in the power lines to electronic equipment, preferably at the equipment end of the feeder;
6) Double sided PCB's must be utilized wherever practicable.

5.4 Screening of Cables

The screening of cables must satisfy the following ground rules:

1) Screens must have a shielding efficiency of at least 90%;
2) Low frequency cables should use a ferrous screen material, grounded at a single point, i.e. below 15 kHz;
3) High frequency cable should use bronze, copper, or aluminum material and should be grounded at intervals of less than 0.15 wavelengths at the highest frequency of interest, wherever practical;
4) Metallic trunking may provide effective screening provided it is bonded as it passes through any bulkhead and any seams and joints are continuously welded.

5.5 Grounding and Bonding

Grounding and bonding must be in accordance with TP127E.

5.5.1 Racks and Consoles

The following applies to the grounding of equipment racks and consoles:

1) Racks and consoles must be of all welded construction with direct electrical connection of the rack or console to ship's metal. Where direct connection is not feasible, ground straps are required.
2) The use of non-welded racks and consoles is subject to the requirement that each individual member is properly grounded. Members may be either individually grounded or they may be bonded to each other by means of a strap. Electrically continuity between adjacent members must not be inferred from their proximity and mechanical connection.

5.5.2 Equipment Cases

Equipment cases must have at least 40 dB attenuation capabilities. Sheet steel must be preferred. Individual equipment cases must be grounded as follows:

1) Cases must be connected to the ground rail or metal of the rack or console in which they are mounted;
2) Each case must be individually grounded, i.e. case-to-case connection is not allowed for grounding;
3) If practical, equipment within a single system must be located close together and connected to a single point ground;
4) The grounding of equipment cases must not rely upon their retaining hardware;
5) Access doors/covers must be bonded to the equipment case;
6) Slide mounted equipment must use straps which allow for the withdrawal of equipment;
7) On permanently mounted equipment, the ground strap must be as short as possible;
8) Flexible braid straps may be used only where movement of equipment or components so dictates.

5.5.3 Methods and Materials

The following applies to materials and methods used in grounding and bonding:

1) All contact surfaces must be clean and free from paint, scale, rust or any material considered likely to impair the contact efficiency;
2) The contact surface area must be as large as practical;
3) Contact surfaces must be bonded using a method that will not impair contact efficiency, i.e., welding welded stud, etc.;
4) Straps must be of 2.5 cm (1 inch) solid copper, 0.6 mm (0.025 inch) thick and as short as possible while avoiding the creating of sharp bends and corners;
5) Ground straps and joints must be readily accessible for maintenance;
6) Other low resistance, chemically compatible, corrosion-resistant materials may be approved for use by TCMS;
7) All bonding hardware must be of low resistance, corrosion-resistant material, and preferably stainless steel. Upper deck hardware must be of stainless steel.

5.5.4 Additional Precautions

Care must be taken in the grounding and bonding of metallic structures and of equipment in areas of high-level radio frequency energy, such as radio and electronic equipment rooms. Antennae, antenna tuners and radar transceivers are also critical regardless of where they are located. In these locations, all floating metallic structures such as conduit, air ducting, pipes, box cable, cable screens, and metal support frames for liner board or ceiling tiles must be grounded at intervals of less than 3 feet (1m). The use of metal faced liner board and/or ceiling tiles must be avoided in these locations.

All metallic structures on the upper deck such as pipes, rails, stanchions, and casings must be bonded to ship's metal.

6.0 DOCUMENTATION

All Contractor supplied documentation must become the property of Canada. This must include all electronic media. Electronic media must not be protected to prevent making additional copies for internal use.
All Contractor supplied documentation as denoted in this section must be provided to the Technical and Inspection authorities in English.

6.1 Drawings

6.1.1 General

All drawings supplied by the Contractor must be AutoCAD 2000 DWG format compatible. Electronic drawings must not be protected so as to be "Read-Only" files. Fonts for text must be AutoCAD 2000 standard. Blocks are not to be grouped. All text included in a block must be an attribute.

A complete list of layer names and brief description of each layer's use must accompany all files. Layer names, layer color codes, and layer line types must be standardized across the drawings, or drawing types.

Electronic drawings must be provided to the Technical Authority on CD-ROM media. All disks must be clearly labeled with the project number, file names and drawing numbers. If a complete listing exceeds the label size, a "readme.txt" file in ASCII format must be provided with each disk. A printed copy of the "readme" file must accompany each disk. Disks must be labeled "As Fitted" drawings for those drawings that have been approved and finalized.

A complete list of symbol (block) names with a description of each symbol must be provided. One block per drawing must be provided in electronic format suitable for use with AutoCAD 2000. Drawing sheet sizes, including where possible vendor drawings, must be ANSI standards with standard border and title block in the layout section.

"As Fitted" prints/plots must not contain markings or corrections by hand, i.e. marker, pen, pencil.

The Contractor must provide the Inspection Authority and the Technical Authority with all drawings required by or generated by the sub-Contractors.

Schematic drawings of systems must include all pertinent system information, including sizes, dimensions, labeling, equipment locations, and all information relating to system fittings.

The Contractor must have in place a complete system of documenting and controlling all drawings and drawing revisions affected by the work. The Contractor must maintain an up-to-date list of drawings and revisions and must provide this list to the Inspection Authority and the Technical Authority at the monthly progress meeting. This list must include a column of all drawings sent to TCMS for approval.

6.1.2 Guidance Drawings

All technical guidance drawings are issued to the Contractor from the Canadian Coast Guard for guidance purposes only. The Contractor must develop working drawings and ensure that all drawings receive regulatory approval. The Contractor is to note that not all guidance drawings supplied are "As Fitted" drawings. The Contractor must physically verify all affected items and all dimensions necessary for the work.

6.1.3 Working Drawings

The Contractor must develop detailed working drawings for all project work and regulatory body approval purposes. All variations must be incorporated into the working drawing revisions.

Working drawings must clearly indicate the materials and/or equipment being supplied, all details of construction, accurate dimensions, capacity, operating characteristics and performance. Each working drawing must have a unique identification number and blocks of numbers must be used to identify the various specification items. Where multiple working drawings are required each drawing must indicate the total number of sheets within the series.

Each working drawing for non-catalogue items must be prepared specifically for this project. Working drawings and brochures for catalogue items must be clearly marked to show the items being supplied.

The Contractor must sign off on all working drawings indicating:

a) The drawing has been checked for conformance with all Specification requirements;
b) The equipment has been coordinated with other equipment to which it is attached and/or connected;
c) All dimensions have been verified to ensure the proper installation of equipment within the available space.

6.1.4 Working Drawings – Submission for Review by PWGSC and CCG

6.1.4.1 The Contractor must submit to the Technical Authority two (2) copies of all working drawings, shop drawings and schedules required for the work. Drawings must be submitted to the Technical Authority and the Inspection Authority at least fourteen (14) days prior to commencement of work for the affected drawings. The Inspection Authority and the Technical Authority must review the drawings within five (5) working days. This review will consist of verification of adherence to the requirements of the specification. Where necessary the Technical Authority will return one (1) copy of the drawing to the Contractor with comments from the Inspection Authority and the Technical Authority. The Contractor must make any required amendments and return two (2) copies of the revised drawing, with revision dates and revision numbers, to the Technical Authority.

6.1.4.2 Reviewed drawings must not be modified in any way without written approval of the Technical Authority. In the event of subsequent revisions to drawings already reviewed the entire drawing, i.e., all sheets, whether revised or not, must be resubmitted for review.

6.1.4.3 Space must be provided on the working drawings for review dates and signatures of the Inspection Authority and the Technical Authority.

6.1.4.4 Drawings submitted for review, unless otherwise specified, must be in the form of plotted originals. Manufacturer's printed data sheets for standard items are acceptable providing pertinent characteristics are identified and relate to specified items.

6.1.5 Working Drawings – Submission for TCMS Approval

6.1.5.1 The Contractor must submit to TCMS copies, as necessary, of working drawings, ship drawings and/or layout drawings, schedules and calculation required for approval by TCMS.

6.1.5.2 It must be the responsibility of the Contractor to ensure working drawings are TCMS approved prior to the start of work for any section of the specification where TCMS approval is required.

6.1.5.3 Space must be provided on the working drawings for TCMS approval stamps. This space must be clear of all technical information and must not be on the back of any sheets

6.1.5.4 The Contractor must contact the respective TCMS approvals office to determine the number and type of materials required for approval submissions.

6.1.5.6 The Contractor must supply one (1) original stamped drawings and three (3) copies of all TCMS approved drawings to the Technical Authority.

6.1.5.7 The Contractor must supply four (4) scanned copy, electronic TIF format, of all TCMS approved drawings on individual CD-ROM media to the Technical Authority.

6.1.6 "As Fitted" Drawings

Upon completion of the work, the Contractor must transfer all mark-ups from the working drawings to a final revision of all vessel drawings affected by the project work. These drawing must become the "As Fitted" drawings for the project work.

The Contractor must update all vessel drawings affected by the work.

At vessel acceptance, the Contractor must supply to the Technical Authority the following:

a) Four (4) plotted copies of the latest revision of each of the "As Fitted" drawings;
b) Four (4) electronic copies of the latest revision of each "As Fitted" drawing on individual CD-ROM media in AutoCAD 2007 DWG format. CD-ROM media must be supplied with detailed file lists for each CD-ROM;
c) All drawings must become the property of Canada;
d) Plotted drawings must be on standard ANSI paper sizes.

If no AutoCAD drawing files are produced then scanned files (raster format) must be supplied to the Technical Authority in a TIF format.

"As Fitted" drawings must be delivered within 15 days after completion of the sea trials.

6.1.7 Framed Drawings

The following drawings, modified to "As Fitted" status for the vessel must be printed, framed and mounted on board the vessel in locations to be designated by the Technical Authority:

- General Arrangement Drawings, Plan View of all Decks and Profile;
- Capacity Plan;
- Fire Fighting Systems and Life Saving Equipment.

6.2 Manuals and Records

6.1.2 General

Instruction Manuals and Records must be individually bound in a hard cover 3 ring book formats with a page size of 8 1/2 inches x 11 inches. 3 Ring binders must be of the "D" type with positive locking mechanisms. Drawings and documents of a larger size must be concertina folded to suit. The covers must have the following information printed thereon:

- CCGS Henry Larsen – Vessel Life Extension
- Equipment/System Identification;
- Equipment Manufacturer;
- Revision number and date.

Plastic tabbed indices must be provided for all sections of the manuals. Major equipment components must be subdivided into separate sections of the manuals.

A master index must be provided at the beginning of each binder indicating all items included in each section.

A list of names, addresses and telephone numbers of contacts associated with the equipment manufacturers must be provided that can be used after the project completion for maintenance and information data purposes.

A copy of the final reviewed and approved "As Fitted" drawing(s) must be provided within the maintenance manual.

The Contractor must supply four (4) paper copies of all manuals and data sheets in English for all Contractor Furnished Equipment items to the Technical Authority prior to the completion of the contract.

The Contractor must supply four (4) copies of each manual and all associated data sheets on individual CD-ROMs in electronic PDF file format to the Technical Authority prior to the completion of the contract.

6.1.3 Operation Manuals – "As Fitted"

Operation manuals must include the following items:

1) General description of equipment operating sequence;
2) Step by step procedure to follow in commissioning the equipment;
3) Schematic wiring diagram for the fitted equipment;
4) All pertinent equipment performance criteria;
5) Where software/hardware systems are fitted, the operation manual must include the following:
   a) Full software documentation manual for the system and in a CD-ROM format such that Canada may revise programs without recourse to the Contractor.
   b) The minimum software documentation must include:
      i. System level diagrams describing the overall scheme of the software/hardware system.
6) The functional specifications, which must describe in detail the functional capabilities of the system and each software components;
7) Project specific program listings including all comments describing the details of the code functions;
8) All listings, files, manuals and associated documentation materials must be delivered to and become the property of Canada.

The Contractor must supply the number of paper copies and electronic copies of the operations manuals as set out in Section Manuals and records General.

6.1.4 Maintenance Manuals – "As Fitted"

Maintenance manuals are to include:

1) Manufacturer's maintenance instructions for each item of the equipment requiring maintenance activity;
2) Instructions are to include installation instructions, part numbers, part lists, master drawings and exploded views with part identification for all mechanical, electrical and electronic parts, name of suppliers;
3) Summary list of each item of the equipment requiring lubrication, indicating the name of the equipment item, location of all points of lubrication, type of lubricant recommended, and frequency of lubrication;
4) Troubleshooting sections must be included for all equipment in the maintenance manual under a separate heading.

The Contractor must supply the number of paper copies and electronic copies of the maintenance manuals as set out in Section Manuals and Records General.

6.1.5 Tests / Trials and Inspection Records

The Contractor must prepare a separate binder, arranged as per Section 6.2.1, for the documentation of all Test, Trials and Inspection Records. The binder must be indexed for each test, trial and inspection performed.

The Contractor must maintain a complete and accurate record of all tests, trials and inspections conducted during the execution of the work. This must include those tests, trials and inspections

performed at sub-Contractors facilities. The records must include all relevant documentation, test procedures, associated test sheets, including shop test data, and test, trial and inspection data and observation results.

All originals of the test, trial and inspections records must be signed by TCMS, the Contractor and where necessary by the sub-Contractors and/or Field Service Representative (FSR) who witnessed the tests.

Tests and inspections carried out for the specific purpose of satisfying the TCMS requirements for the Ship Inspection Reporting System (SIRS) update of the vessel must be recorded and signed on documents meeting the requirements of TCMS to clearly indicate which piece of equipment or system with associated field number was tested and the results of the tests carried out. All copies of the documentation must be dated and signed by the attending TCMS surveyor and the Contractor.

6.1.6 Certificate Records

The Contractor must prepare a separate binder, arranged as per Section Records and Manuals, General for the documentation of all Certificate Records. The binder must be indexed for each item or piece of equipment for which Certificate Records are available.

The Contractor must maintain a complete and accurate record of all certificate records applicable to the work. Certificate records must be current and for the type of equipment being installed by the Contractor. The Contractor must ensure that where classification society approval certificates are required, as per Section 3.1, these certificates are provided within the Certificate Records binder. Where manufacturers have supplied certificates for equipment within operational manuals, copies of these certificates must be indexed within the Certificate Records binder. The Contractor must also obtain and index all certificates issued by its sub-Contractors.

The Contractor must supply the number of paper copies and electronic copies of the test, trials and inspection records as set out in Section Records and Manuals, General.

NOTE: Where original certificates are provided, especially TCMS certificates, one of the three paper copies must be the original document.

6.2 Photographs and Images – General

6.2.1 As Delivered" Photographs/Images

The Contractor must supply a professional photographer to deliver 1000 high resolution (minimum 8 Mega Pixel) digital images in JPEG format. Images must be stored on CD-ROM media. The Inspection Authority and the Technical Authority must be in attendance for all images. The entire ship must be photographed with enough detail to point out specific parts and/or pieces. If Canada requests more images to be taken, the price must be prorated.

The Contractor must fulfill this requirement in conjunction with Section 1 Photographic Survey of this Specification.

The Contractor must provide two (2) copies of all “As Delivered” digital images on individual CD-ROMs to the Inspection Authority and the Technical Authority at the first progress meeting after the delivery of the vessel to the Contractor’s facility.

6.2.2 Progress Photographs/Images

The Contractor must provide high-resolution (minimum 8 Mega Pixel) JPEG digital images on CD-ROM media of the work in progress during each phase of the project. The photographs must commence when the work on the vessel begins and continue as long as work is in progress.

The Contractor must take sufficient exposures during the modernization project to ensure that an adequate record of work progress is captured. The date of exposure must be automatically recorded for all images.

The Contractor must provide two (2) copies of all progress photographs on individual CD-ROM media in JPEG format to the Inspection Authority and the Technical Authority at monthly progress meetings.

7.0 TESTS, DOCK TRIALS AND SEA TRIALS

7.1 General Requirements

The Contractor must demonstrate that the completed work and equipment is in compliance with the performance requirements of this Specification. The Contractor must develop test and trial procedures, and conduct all tests and trials required by this Specification and as may be required by the regulatory bodies in order to permit the issue of all appropriate certificates for the vessel. The Contractor must obtain all necessary certificates for the vessel to ensure that the vessel is fully certified and seaworthy for a vessel of its class prior to the completion of the contract.

The Contractor must prepare a trials schedule showing dates, sequence, procedures, and duration of each trial or set of trials. This agenda, including the proposed trial record sheets for all trials, must be submitted for review and approval to the Technical Authority and the Inspection Authority twenty (20) working days prior to the start of any tests and trials. The Contractor must coordinate the trials agenda with TCMS to ensure attendance where necessary. The Contractor must ensure a manufacturer's Field Service Representative (FSR) or written authorization from the manufacturer must be available prior to initial start-up of newly installed or modified equipment. All trials must be witnessed by the Inspection Authority and where necessary, by TCMS, FSR's and any sub-Contractors. All tests must be completed on individual components of a system and all defects corrected to the satisfaction of the Inspection Authority, TCMS and/or the attending FSR. Once defects are corrected, the test and trial must be repeated to the satisfaction of the Inspection Authority and where necessary TCMS.

Shop testing, dock and sea trials procedures must be to the standards required by TCMS. Where TCMS has no requirements for shop test procedures, the Contractor must adhere to the S.N.A.M.E. guidelines as referenced in Section 1.4 of this Specification. The minimum standard for all electrical dock and sea trials must be in accordance with TCMS, TP127E and IEEE Std 45-2002. All electronic equipment static tests must be completed prior to sea trials with only the operational tests to be carried out at sea.

Mechanical and piping systems must be tested in accordance with Section 7.2.

Hydrostatic testing of piping and components forming part of any system must be completed prior to any operational testing of the system. The Contractor must have on hand signed and witnessed test sheets showing the results of hydrostatic tests prior to the operational tests of the system. As a minimum the Inspection Authority must be notified when any components are being hydrostatically tested.

The Contractor must provide the Technical Authority with a complete list of disturbed services and ship's systems that require functional and operational tests prior to the completion of each specification requirement. The Contractor must develop specific test procedures to test the operational and functional condition of each of the disturbed services and/or ship's systems. The Contractor must submit the list of disturbed services and ship's systems and the associates specific test procedures for review to the Inspection Authority and the Technical Authority twenty (20) working days prior to the start of these system tests.

The Contractor must make reference to Section 6.1.5 with regard to the documentation requirements for the tests, trials and inspection records.

7.2 Mechanical and Piping Systems

All sub-assemblies and piping systems fabricated by the Contractor must be hydrostatically tested to 1.5 times the system's working pressure and proven tight to the satisfaction of the Inspection Authority prior to installation on the vessel.

Machinery and equipment must not be subjected to pressures higher than their maximum allowable operating pressure during system pressure tests. Valves at the components may be closed, or the connection blanked off to protect such components from excessive pressure. If there are any flanged joints in the piping between a tank isolating valve and the open end of the tail pipe, or where a tank isolating valve has not been installed, the flanged joint next to the open end of the tailpipe must be temporarily blanked off so the system may be pressure tested up to that point. Instruments, pressure switches and other components that could be damaged by excessive pressure of system tests must be removed or otherwise protected during the tests.

For tests, calibrated pressure gauges must be installed at the connections provided in the gauge piping for this purpose. During tests, readings of installed gauges must be checked with the calibrated test gauges. Installed gauges must be adjusted where necessary to register pressure accurately. The Contractor must provide calibration certificates for all instrumentation used for the testing of systems to the Inspection Authority and the Technical Authority.

When the duration of a pressure test is not specified, the test pressure must be held a sufficient length of time to permit a thorough examination of the system for leaks to the satisfaction of the Inspection Authority.

Relief and safety valves and all other components installed to limit operating pressures must be removed, blanked or bypassed where necessary to build up to the pressure specified for the test. After a system has satisfactorily passed these tests, such components must be reinstalled and tested under pressure to assure they operate at approved set pressures. Set pressures indicated on identification plates of these valves must conform to the approved set pressures.

All components necessary for the safe operation of the system must be checked and adjusted during the operating tests to demonstrate compliance with the requirements specified and approved for the system. Operating tests must demonstrate that the piping design and installation adequately meet the service demands.

Components, such as spring hangers must be adjusted where necessary and flexible piping connections slip joints, expansion joints and noise isolation pipe fittings must be checked for satisfactory operation while the system in which they are installed is being operated.

Where pumps or ejectors have suctions from tanks or compartments, the operating test must demonstrate the ability of the system to remove the service liquid down to the level of the open end of the suction tail pipe.

Open systems such as air escapes, overflows and deck drains must be tested for unobstructed flow with compressed air or water at not more than 100 PSI. Systems for hand pumps, portable drainage facilities and similar miscellaneous systems must be given an operating test and the specified pressure test. Pressure tests must precede operating tests.

All systems must have a visual inspection and must be leak-free during the specified tests.

All of the system pressure and operating tests must be completed before the system trials.

Where tanks have been opened for the purpose of conducting work, all tanks are to be cleared, cleaned and submitted for inspection to the Inspection Authority prior to closing of the tank or space. Failure to notify the Inspection Authority does not absolve the Contractor of the responsibility of providing the opportunity to inspect any completed items. Inspection of any tanks or spaces by the Inspection Authority does not substitute for any required inspection by TCMS. At the completion of the inspection, all tank covers are to be fitted with new gasket material prior to the closing of the tanks.

Where work has been carried out in or on any structural part of a tank, that tank must be subjected to a hydrostatic pressure test of 8- foot (2.5m) head of water. The hydrostatic test must be witnessed by TCMS and the Inspection Authority. The hydrostatic tests must be documented as per Section 6.1.5 of this Specification.

7.3 Ship Performance Sea Trials

In addition to dock trials and commissioning tests of individual ship systems specified within this Specification the Contractor must perform a full set of sea trials in accordance with the “Guide for Sea Trials” as published by S.N.A.M.E. (Section 1.4 of this specification). The Contractor must develop all sea trial procedures and data sheets. The sea trial procedures with attached data sheets must be submitted to the Inspection Authority and the Technical Authority for review and approval twenty (20) working days prior to the start of the Sea Trials.

8.0 BERTHING, MOORING, DOCKING/UNDOCKING, VESSEL SECURITY

8.1 Berthing and Mooring

The Contractor must provide all material and labor required to handle, dry-dock, and fit out a ship which has particulars set out in Section 1.2. Details of the Berthing and Mooring facilities are to be included in the bidder's proposal.

The Contractor must be responsible to berth and moor the vessel for the duration of the refit period. The Crown must have unrestricted access to the vessel at all times.

The vessel must be located at the Contractor's facility for the duration of the refit period.

The depth of water must be sufficient to prevent the vessel touching bottom under any tidal or low water conditions. The Contractor must ensure that there is sufficient water under the keel to allow propulsion system testing during dock trials.

The Contractor must supply all mooring lines and labor required in berthing, mooring, dock trials and casting off for the vessel. The Contractor may use the vessel's lines to tie up the vessel on arrival but must immediately replace these and remove the vessel's lines to storage. The Contractor must supply all material and labor required to dock and undock the vessel including any vessel movements, provisions of tugs, and line handling personnel.

8.2 Services

The Contractor must prevent rat and vermin harborage onboard the vessel for the duration of the contract. The Contractor must remove any rats or vermin from onboard the vessel if they do come onboard during the contract period.
The following services are to be supplied and connected to the vessel in dry dock and afloat during the manned portions of the refit period and disconnected upon leaving. The Contractor is to supply all material to point of onboard connection. The Contractor's quote is to include all cranage/scaffolding required for connection/disconnection. The Contractor will be responsible for any additional connections required as a result of the ship being shifted between berths and to the dry dock. Global and daily rates are to be quoted.

The bid price is to be broken down by item.

Gangways: The Contractor must supply and erect one gangway complete with safety net in compliance with the Canada Labor Code while the vessel is secured alongside the Contractor's facility. The Contractor must be responsible for the safety of the gangway.

The Contractor must supply and erect gangways in compliance with the Canada Labour Code when the vessel is docked. There must be two separate and independent means of accessing the vessel at all times. Gangways are to be maintained safe and structurally suitable for the passage of ship's crew and workmen as per MOSH regulation, Section 2. Gangways are to be well lit at

night. The gangways are to be arranged at opposite ends of the vessel as directed by the Commanding Officer. The Contractor must be responsible for the safety of the gangways.

Potable and non-potable Water: The Bidder must submit a written price quote on a per cubic meter consumption of potable, non- potable, and sea water.

The Contractor must provide and install a calibrated flow meter for each domestic water supply connected to the vessel for the duration of the trials period. Flow meters are to be sized for the service they are intended for. Calibration records for the flow meters must be presented to the Inspection Authority. All flow meters must be read by the Contractor at the beginning and end of the contract period, as well as before and after any vessel movement to or from the fit out wall or the dry dock, in the presence of the Inspection Authority. The following connections will be required to service the vessel:

Fire Main: Water shall be supplied to the vessel's fire main system at a pressure of 550 kPa (80 psi) and be continuous 24 hours per day, every day, using two (2) hoses. The hoses shall be connected to the ship's international shore connection located on the Upper Deck, frame 100 (port and starboard side).
A pressure reducing valve with pressure gauge shall be fitted before the shore connection valve on board the ship. The water supply must be connected immediately following the docking of the vessel. There must be no interruption of this supply for the duration of the refit period. Consumption will be on an as-required basis for firefighting and cleaning purposes.

Cooling Water Connections: While the ship is in dry dock, the Contractor is to connect and fit three (3) 38mm (1½") dia. cooling water connection hoses, to the Central Cooling System. One supply hose to be connected to the 1-1/2" SW connection located at the P&S Fuelling Stations, Upper Deck. Another supply hose is to be run between the 1-1/2"- 3-way changeover valve located on the Portside AG1 Room (labeled Dry dock Central Cooling Supply) and the 2-1/2" inlet valve located in way of AG1 Stbd, side. An outlet hose is to be run from the Central Cooling plate coolers outlet piping to overboard in the most convenient location. Pressure to be supplied through a pressure reducing valve with gauge at 350 kPa (50 psi). Cooling Water Hoses are to be removed ashore upon completion of dry docking period.

Potable Fresh Water: Potable water shall be supplied through a fresh water filling line with a pressure reducing valve and pressure gauge at the ship's fresh water filling connection located on the Upper Deck, frame 29, port or stbd side.
Approximately eight (8) cubic meters of fresh water per day shall be provided while crew members are onboard.
Contractor to supply any fresh water used for cleaning, testing or flushing of tanks as required by the specification in addition to the above.
The contractor is to provide test results from within the past month indicating that the water meets provincial drinking water standards before the connection is made to the vessel.
The water supply must be connected immediately prior to the arrival of the crew for trials. There must be no interruption of this supply after connection. The vessel will be consuming an estimated 8,000 liters of potable water per day when crewed. The Contractor must quote on 7 day's supply of this service.

Sewage Connection: A 100mm diameter sewage overboard discharge, located at frame 85 starboard side, requires to have a connection pipe welded to the shell with hose attached on free end to lead sewage away from the ship's side to Contractor's sewage outlet.

For all water lines connected and servicing the vessel, the Contractor must be responsible to take all necessary precautions to ensure that the water lines do not freeze during cold weather. Special attention must be given to the fire main supply line.

Garbage Removal: Garbage containers of 215 cu. ft. (6 m3) minimum capacity shall be provided and used. This includes all sludge and scale from tank cleaning. The Contractor is responsible for provision of suitable containers and any costs associated with waste disposal regulations that may be in place. This will include hazardous materials. The Contractor is to advise of any such provincial or federal regulations or practices at the Pre-Refit Meeting.

Cost of cranage and haulage to be included in quotation. Garbage container to be placed in a suitable location agreed upon by the Contractor and the Chief Engineer garbage bin must be provided and located at the ship's gangway. Garbage must be collected from this bin daily while the vessel is crewed.

Oily Bilge Water: Contractor to quote on removing from ship's bilges approximately twenty (20) cubic meters of oil/water mixture. Quote unit cost for each additional cubic meter. For estimation purposes, quote as a mixture of 25% oil, and 75% water. This item is to be adjusted up or down upon proof of invoice. The quantities in this item are for the vessel's requirements and are not to be included with the Contractor's requirements for completion of items in this specification. Contractor to provide identity of firm(s) licensed for pumping and disposal of waste oil. Contractor to supply Contractor to supply disposal receipts for inclusion in the vessels Oil Discharge book.

Protective Floor Covering: Deck Protection: Alleyways throughout the ship including the Wheelhouse and all stairways shall be covered with " (3mm) Masonite panels. The Contractor must complete the installation of the protective floor covering within 48 hours of the vessels arrival at the Contractor's facility.

All edges and joints are to be securely taped down. Any deck coverings damaged during the course of the refit are to be replaced.

Areas to be covered:

Main Deck: starting at frame 30 up to frame 165, both sides including all cross alleyways and cabin entranceways, excluding Galley, Crew's Cafeteria and Pantry area. Total area = 200 sq. m. (2150 sq. ft.).

Upper Deck: starting at frame 121 up to frame 139, both sides and including all cross alleyways and Engineer's Office. Total area = 117 sq. m. (1264 sq. ft.).

Boat Deck: starting at frame 121 to frame 139, both sides and cross alleyways. Total area = 31 sq. m. (336 sq. ft.).

Officers' Deck: starting at frame 121 up to frame 139 both sides and cross alleyway. Total area = 28 sq. m. (305 sq. ft.).

Navigation Bridge Deck: Starting at frame 113 to frame 149 including complete carpeted area of Wheelhouse and passageway to Special Navigation Room. Total area = 100 sq. m. (1100 sq. ft.).

Stairways: Total area = 40 sq. m. (430 sq. ft.).

Cabins: Contractor to quote on covering the decks in five cabins: Chief Engineer, Senior Engineer, Senior Electrician, Chief Officer and Spare Cabin. Total area for cabins = 30 sq. m.

Note: Contractor to quote a unit price per square meter for adjustment purposes.

All deck coverings are to be removed from the ship and taken ashore on completion of work. Contractor to ensure all tape marks on deck caused by securing protective coverings to deck are cleaned from all decks and stairs. The Contractor must remove the protective floor coverings no earlier than 24 hours before the vessels departure from the Contractor's facility.

Crane: The Contractor must supply the services of a 20 ton crane and personnel to operate and direct the crane to load and unload supplies from the vessel. The Contractor must quote on 300 hours of crane time.

Electrical Shore Power: Shore power facilities to be supplied to ship through two (2) 600 VAC, 60 hz.,3 ph., 400 ampere sources. Contractor supplied cables and fittings are to be used. Cables to be spliced into two (2) Owner supplied female shore power plugs and insulated. Cables and connections are to be Megger tested prior to hook up. Plugs to be connected to two (2) male plugs at the shore power connection box on the aft end of the Upper Deck.

i) Contractor to quote for supplying 8,000 KW hours per day times (10) the number of days scheduled for the manned portion of the refit.. Contractor to quote KWH unit rate for adjustment purposes.
ii) Upon completion of refit and removal of shore power, the plugs are to be disconnected from cables and turned over to the ship's Electrical Officer.
iii) Pigtails on plugs are not to be cut when disconnecting from shore power cables.
iv) Meter readings to be taken from the ship's shore power meter located in the Control Room. Meter readings to be recorded by the Contractor and the ship's Electrical Officer at the time of connection and disconnection.
v) Contractor is advised that the ship requires shore power from the starting date of the manned portion to the completion date of the contract. The power quoted is for the vessel's own use.
vi) The contractor is to provide prior to the closing of bids, a letter stating that they meet the requirement of providing shore power requirements as stated in the specification for the duration of the manned refit period.
vii) NOTE: If Contractor is supplying power to the ship by means of a diesel generator set on the dock; contractor is responsible for any watch keeping personnel or fuel for the generator unit. The Contractor must quote on 10 days crewed.

Heat: The Contractor is to provide heat throughout the vessel via a rental Thermal fluid unit c/w circulation pumps. The Contractor may fabricate and install piping connection/connections

before the pressure regulating valves to gain access to the vessels circulatory system. The Contractor is responsible to ensure that heat and de-humidification is maintained for the duration of the heating season Sept. 2015 through to mid-May, 2016. Suggested Supplier for Rental Unit:
Fulton Boiler Works Canada Inc.
75 Mary Street, Unit 10,
Aurora, Ont
L4G 1G3
Ph: (905) 727-4013 Contact: mailto:Kevin.Helinger@fulton.com or david.kluey@fulton.com

The Contractor must ensure that environmental conditions are monitored aboard the vessel throughout the contract period to prevent damage from temperature variations. This must include protection from the freezing of any piping system with fluids within them and the overheating of any spaces in which electronic equipment could be detrimentally affected such as the electronics room, bridge or engine control room.

8.3 Docking

The Contractor must supply all labor, materials and facilities to dock and undock the vessel to perform the work required by these specifications.

The vessel will be delivered to the ship yard entrance. The Contractor must provide for the handling of the vessel's mooring lines and tug assistance as required to perform the docking and undocking of the vessel and any other movements required during the contract period. The Contractor must be responsible for all associated fees.

The particulars of the vessel are as per Section 1.2 of this specification. The Contractor must provide proof with the bid documents that the docking facility is certified to dry dock a vessel with these particulars.

The stability books are included as part of the materials provided to the bidders.

A docking plan is available on board the vessel. Contractor will be responsible to ensure drawing is returned to vessel upon completion of work.
Drydocking is to take place immediately upon the ship arriving at the shipyard to commence refit.
Contractor to prepare blocks and necessary shoring to maintain true alignment of the vessel's hull and machinery throughout the drydocking period. Contractor to dock and undock vessel and allow sufficient laydays to perform both the work described in this specification with reasonable time allowance to deal with any work arisings. Contractor is to quote total number of laydays and unit cost per layday
The Contractor must be responsible for recording all tank soundings, draft, trim and list of the vessel, and performing the necessary stability calculations for the successful docking of the vessel. These calculations must be forwarded to the Technical Authority and the Inspection Authority for review 48 hours prior to docking the vessel.

The vessel must be docked so that all docking plugs, transducers, anodes and sea inlet grids are clear and accessible. A minimum clearance of 1.3 meters (4 feet) must be available below the keel. If any hull fittings are covered, the Contractor must be responsible for all labor and

materials required for making alternative arrangements to drain tanks and/or move blocks to gain access to areas of specified work. The Contractor must refer to the Docking Plan.

The Contractor must fit drain fittings to the various deck scuppers or overboard drains as required if they interfere with the work in way. The Contractor must quote on fitting five (5) temporary drains for deck scuppers and overboard drains.

The Contractor shall be responsible for the safe transfer of the ship from its pre-docking berth or location onto its docking blocks. During docking, radio contact is to be maintained between the vessel's Commanding Officer and the Contractor's Docking Master. The Contractor is to include in his bid, tug and/or pilotage, and ice clearing services as required. All costs for line handling and Qualified Docking Master are the responsibility of the contractor.
The Contractor must provide a ground cable between the vessel and the dock while the vessel is docked as per TCMS Ship Safety Bulletin 6/89.

Within two hours of docking, the underwater hull is to be cleaned by high pressure fresh water washing (2000 PSI minimum) to remove all marine growth and allow preliminary inspection.

Prior to commencing hydro blasting, all hull mounted equipment and openings are to be fully protected.
The following information is to be recorded on Ship Condition Reports:
a) Prior to docking, all tanks on vessel to be sounded and contents recorded. Copy to be signed by the ship's Captain, the Chief Engineer and Contractor's Docking Master.

b) On docking, all tanks emptied to be listed, and copies held by Contractor and Chief Engineer.

c) At undocking, all tanks to be refilled to obtain same draft and trim as at docking, and condition agreed by the Docking Master, the ship's Captain and the Chief Engineer.

8.4 Undocking

Before floating the vessel, the Contractor must ensure that all tanks are filled to obtain the same conditions as at docking. The Contractor must be responsible for the safe undocking of the vessel taking into consideration the stability changes resulting from the work of these specifications. The Contractor must perform the necessary stability calculations for undocking of the vessel. These calculations must be forwarded to the Inspection Authority and the Technical Authority for review 48 hours prior to flooding the dry dock.

The Contractor must ensure that all shipside openings, including valves, drain and docking plugs are secure before flooding the dry dock.

The Contractor must supply and install and remove upon completion, any necessary fittings and lugs necessary to carry out the work in this specification. Where lugs and/or fittings are installed and removed, the welds must be ground flush with the hull. Any damaged and/or disturbed paint work must be treated in accordance with the paint manufacturer’s requirements and painted according to the vessel’s paint scheme.

The Contractor must supply all labour necessary to handle the ship's lines during the undocking process. The Contractor must be responsible to supply the services of tugs to ensure that the vessel is undocked in a safe manner and that no damage to the vessel will result during the undocking procedure.

8.5 Vessel Security

The Contractor must ensure the security of the vessel while the vessel is in the Contractor's care, control and custody. This must include provisions to prevent damage to the vessel due to wind and wave action, tides, flooding, fire, and weather conditions.

The Contractor meet the above requirement, the Contractor must regularly monitor the mooring lines, and increase the frequency of the monitoring during adverse weather conditions.

The Contractor must provide dedicated personnel for continuous on-board monitoring of the interior and exterior of the vessel. In addition to requirements related to hot work, the Contractor must provide security rounds of the vessel, at a minimum of every 4 hours, outside of the main working hours. These rounds must include a visual inspection of each compartment, and any adverse condition that could affect the vessel must be actioned immediately. Records of these rounds must be presented to the Inspection Authority upon request.

The Contractor must have a call out system in place to respond to any emergency, with personnel qualified to remedy the situation and prevent damage to the vessel.

9.0 DOCKING PLUGS (REFIT)

9.1 Identification

Contractor shall remove the following docking plugs to drain water accumulation. Locations of the plugs are shown on docking plan:

9.2 References

9.2.1 **Equipment Data**

Discharge Sea Bay (Fr. 84, centerline)
Suction Sea Bay (Fr. 87, centerline)
Aft Peak Tk (Fr G)
Fwd. Stability Tk (Fr.140 P & S)
Aft Stability Tank (Fr.127 P & S)
Aft Trim Tank (Fr. 16)

Note: Docking plugs for water ballast and void tanks are 25mm (1") square recessed. Docking plugs for fuel oil/lube oil tanks are 19mm (3/4") square recessed.

9.2.2 **Drawings**

Drawing Number	Description	Electronic Number
13-0078-01	Docking Plan	

9.2.3 **Regulations**

9.2.3.1 N/A.

9.2.4 Standards

9.2.4.1N/A

9.2.5 **Quality Assurance Standards**

9.2.5.1 As per the Contractors QA Program.

9.3 Technical

9.3.1.1 All docking plugs removed shall be tagged immediately after removal, stored in a suitable container and given to the Chief Officer. A ship's Officer is to be present when docking plugs are removed and reinstalled. Locations of the plugs are shown on docking plan.

9.3.1.2 Tap to be run over threads in hole. Docking plug threads to be cleaned on a lathe if required. Contractor to quote on thread cleaning 6 docking plugs in lathe. No docking plugs are to be removed from water ballast tanks until tanks have been pumped as low as possible by ship's personnel.

9.3.1.3 Any docking plugs removed will require openings to be temporarily filled with wood plugs during operations such as sandblasting, painting, etc. which could cause contamination of tanks to occur.

9.3.1.4 After tanks have been drained, and at the direction of the Chief Engineer, all docking plugs are to be installed using new sealing thread and white lead.

9.4 Proof of Performance

9.4.1 **Inspections**

9.4.1.1 All docking plugs removed shall be tagged immediately after removal, stored in a suitable container and given to the Chief Engineer.

9.4.2 **Testing/Trials**

9.4.2.1 A ship's Officer is to be present when docking plugs are removed and reinstalled .

9.4.3 **Certification.**

9.4.3.1 N/A.

9.5 Deliverables

9.5.1 **Documentation (Reports/Drawings/Manuals)**

9.5.1.1 N/A.

9.5.2 Spares

9.5.2.1 N/A.

9.5.3 **Training**

9.5.3.1 N/A.

10.0 HULL BUTTS & SEAMS (REFIT)

10.1 Identification

The intent of this specification is to complete a hull survey on the vessel, note condition of hull butts and seams, and quantify the extent of repair required.

10.2 References

10.2.1 **Equipment Data**

10.2.1.1N/A.

10.2.2 Drawings

Drawing Number	Description	Electronic Number

10.2.3 Regulations

10.2.3.1 CSA Hull Construction Regulations latest versions.

10.2.4 Standards

10.2.4.1 Welding shall be in accordance with the Canadian Coast Guard Welding Specifications for Ferrous Materials, Revision 4. (TP6151 E)

10.2.4.2 The Contractor shall be currently certified by the Canadian Welding Bureau (CWB) in accordance with CWB 47.1 latest revision Division I, II or III at the time of bid closing.

10.2.4.3 The Contractor shall provide a current letter of validation from the CWB indicating compliance with standard CSA W47.1, Division I, II or III. (latest revision)

10.2.4.4 The Contractor may be required to provide approved procedure data sheets for each type of joint and welding position that will be involved in this refit.
The Contractor may be required to supply a current Welders Certification for each individual welder that will be involved in this refit.

10.2.5 Quality Assurance Standards

10.2.5.1 An electronic copy of the Fleet Safety Manual (Adobe Acrobat .PDF version) can be found at http://ccg-gcc.ncr.dfo-mpo.gc.ca/fleet-flotte_2010/home-accueil/FleetSafetyAndSecurity/FSS_FSM_eng.html

10.3 Technical

10.3.1 Hull plate welding butts and seams to be repaired will be determined at the time of the hull survey by the TCMS representative and the Chief Engineer.

10.3.2 Seams and butts selected for repair are to be marked, cleaned to sound metal by air arc or grinding and brought up to original level by approved welding techniques and materials.

10.3.3 The contractor is to bid on 1500 linear feet of gouging and 1000 linear feet of grinding and unit cost for each.

10.3.4 Amount of gouging and/or grinding will be adjusted by 1379 action.

10.3.5 Contractor to use welding rods suitable for use with Grade EH-36 steel. Suggested rod size- 3/16".

10.3.6 Contractor to quote on 7,500 bead feet of weld, plus a rate per bead foot for adjustment purposes.

10.3.7 Following any seam repairs the surface profile must be prepared for hull coating as per The Hull coating specification item.

10.3.8 Butts and seams falling in way of any fuel tanks will require fuel tank to be gas freed and certified safe for hot work.

10.3.9 Butts and seams falling in ballast/void tanks that are painted will require interior paint work to be touched up in way of damage. This will be addressed by PWGSC 1379 action.

10.4 Proof of Performance

10.4.1 Inspections

10.4.1.1 All work to be to the approval of Transport Canada Marine Safety and the Chief Engineer.

10.4.2 Testing/Trials

10.4.2.1 As requested by TCMS.

10.4.3 Certification

10.4.3.1 TCMS sign offs.

10.5 Deliverables

10.5.1 Documentation (Reports/Drawings/Manuals)

10.5.1.1N/A.

10.5.2 Spares

10.5.2.1N/A

10.5.3 Training

10.5.3.1N/A.

11.0 SEA BAY, SEA CHEST & COFFERDAM (REFIT)

11.1 Identification

The intent of this item is to open the following spaces for cleaning, inspection, TCMS credit, application of coatings and to closing of the spaces following all work.

11.2 References

11.2.1 Equipment Data

The following seven (7) compartments shall be opened for cleaning and inspection by the Chief Engineer and TC Marine Safety: **Note: The Main Discharge Sea bay will be covered in a separate repair specification.**

Bay/Chest	Location	Field #	Size
Main Sea Chest, port	Fr. 83 to 89	3L026	2.5
Main Sea Chest, Stbd	Fr. 83 to 89	3L025	2.5
Distiller Sea Chest, Stbd	Fr. 80 to 81	3L022	0.9
Sea Chest Aft Port	Fr. 59 to 61	3L019	1.5
Main Suction Sea Bay	Fr. 86 to 89	3L024	19.0
Main Discharge Sea Bay	Fr. 83 to 86	3L023	19.0

11.2.2 Drawings

Drawing Number	Description	Electronic Number

11.2.3 Regulations

11.2.3.1 The sea bays and sea chests are considered confined spaces under the Safety Management System.

11.2.4 Standards

11.2.4.1 N/A

11.2.5 Quality Assurance Standards

11.2.5.1 As per the Contractors QA Program.

11.3 Technical

11.3.1 Access to sea chests is by removal of manhole covers on ship's exterior.

11.3.2 Access to the Main Sea Chest Port, is through manhole located in Steward's Cabin 133 on Main Deck. Access to Stbd. Sea Chest is through manhole located in P.O.'s Lounge, Main Deck.

11.3.3 Access to Main Suction/Discharge Sea Bays is by removal of manhole covers located in the Auxiliary Engine Room.

11.3.4 Total of 32 securing plates to be renewed from manhole cover securing studs. Plates are ¼" x 1" x 3" stainless steel. All rough edges to be ground smooth.

11.3.5 All grid and internal sea chest/sea bay surfaces are to be power tool cleaned to SSPC-SP11 Standard prior to application of two (2) coats International Intershield ENA 300,5-8 mil, as per manufacturer's specifications. Area at waterline interfaces to be carefully checked for pitting.

11.3.6 Distiller Sea Chest and main port and stbd sea chests are to be power tool cleaned to SSPC-SP11 Standard prior to application of two (2) coats International Intershield ENA 300,5-8 mil, as per manufacturer's specifications. Approx. area in distiller Sea Chest- 14 sq. m. Approximate area of main sea chests is 36 sq. m.

11.3.7 Contractor responsible for complete and thorough ventilation of sea chest for complete curing of paint.

11.3.8 Grid holes in shell and on manhole covers are to be cleaned by hydro-blasting or reaming using a close fitting drill. The diameter of each grid hole perforation is 25mm.

11.3.9 All countersunk screws to be dressed with die nut and all screw holes are to be tapped out. Contractor to bid on supplying and installing 75 stainless steel countersunk screws (19 mm.) to replace all screws from sea bay/sea chest manhole covers. Unit price is also to be quoted.

11.3.10 New stainless steel securing plates are to be welded in place after manhole covers and securing studs are in place. All welds are to be ground flush.

11.3.11 On completion of work, Sea Chests and Sea Bays to be inspected by Chief Engineer and TCSM before being closed up.

11.3.12 All grids and manhole covers are to be securely refitted. Contractor is to supply and fit new gaskets in way of all manholes. Anti-seizing compound is to be applied to all threads.

11.4 Proof of Performance

11.4.1 Inspections

11.4.1.1 Sea Chests and Sea Bays to be inspected by Chief Engineer and TCSM before being closed up.

11.4.1.2 Coast Guard will be retaining the services of an independent consultant to verify that the surface preparation and coating; storage, preparation, and application are as per the specification. Payment for the consultant will be directly by Coast Guard outside of this contract.

11.4.2 Testing/Trials

11.4.2.1 N/A

11.4.3 Certification

11.4.3.1 The Contractor is responsible for arranging TCMS inspection, TCMS sign offs, etc.

11.5 Deliverables

11.5.1 Documentation (Reports/Drawings/Manuals)

11.5.1.1 N/A.

11.5.2 Spares

11.5.2.1 N/A.

11.5.3 Training

11.5.3.1 N/A.

12.0 DISCHARGE SEA BAY REPAIR

12.1 Identification (CI #24)

This specification is intended to provide a baseline scope of work pertaining to steel renewals in way of the CCGS Henry Larsen's Discharge sea bay, further to ultrasonic analysis carried out by Eastern Technical Services.

12.2 References

12.2.1 Appendex C Eastern Technical Services Report ETS No. 13-362, dated 23 May 2013.

12.2.2 Materials and Welding

a) Unless otherwise specified, all new plating shall be Lloyds Register Grade "A", as approved by the attending TCMS surveyor. Certificate of Steel to be provided to Technical Authority.
b) All welding shall be completed by 480xx or equivalent electrodes, or as required for specific weld procedures.
c) All new tee-connections shall be welded double continuous fillet, 6mm leg length.

12.3 Technical

12.3.1 Execution of the Work

In general, the Contractor shall progress repairs in a manner that:

a) regards prevailing and forecasted weather conditions, such that CCG property and equipment is suitably sheltered where applicable.

b) does not compromise the structural integrity of the vessel.

c) enables periodic and systematic inspections of ongoing and completed work by TCMS and CCG.

12.3.2 In preparation for steel renewals, the Contractor shall:

a) provide all ancillary services necessary to complete the subject repair. These may include, but are not limited to strip out, craneage, staging, cleaning, debris removal, water, shore power, etc.

b) remove furnishings, fittings, fixtures, linings, deck coverings, piping, etc. as required to complete cropping and renewal of steelwork. Note: see Annex A for a description of primary piping systems existing on the tank top in way of discharge seabay, which may require temporary removal.

c) provide all appropriate permits for entrance into and completion of welding in confined spaces.

d) ensure new steel is shot blasted and coated with weldable primer prior to placement onboard.

12.3.3 During the completion of hot work, the Contractor shall:

a) supply fire watch while hot work is ongoing, with appropriate class portable fire extinguisher and charged fire hose ready for use.

b) utilize existing seams/butts as practical when completing plate renewals. Where no butts/seams are present in the vicinity of new steel, corners to have a minimum of 100mm radius.

c) subject work to inspection as coordinated with attending LR surveyor.

12.3.4 Following the completion of hot work in specific areas of the vessel, the Contractor shall:

a) complete ND testing as requested by TCMS, and subject work to final inspections.

b) clean affected spaces and remove debris from vessel.

c) clean and apply primer to welded seams and other disturbed areas. Apply internal and external application of two (2) coats International Intershield ENA 300,5-8 mil, as per manufacturer's specifications.

d) reinstate piping systems and other items to original condition.

12.3.5 SCOPE OF RENEWALS

12.3.5.1 Renewal of discharge seabay plating and stiffening shall be completed in the regions listed below.
Areas indicated are approximate and shall be confirmed onsite by Contractor prior to renewal, in conjunction with CCG or their authorized designate.

12.3.5.2 TM Report references are stated based on ETS reporting. See Annex B for sketches and renderings relevant to areas subject to renewal, and Annex C for referenced TM reporting.

Diminution of original plating is evaluated as follows:

Original Plating/Stiffening Thickness	w/ 30% Diminution
12.5 mm	8.8 mm
10.0 mm	7.0 mm
9.5 mm	6.6 mm

Tanktop Plating

	Longitudinal Extent	Transverse Extent	TM Report	Approx. Area	New Plate Thickness
1.	Frame 84.5 to Frame 86	Girder No. 5P to Girder No. 6P	13-362	1.15 m²	1/2”
2.	100mm fwd of Frame 84 to Frame 86	Seam at C.L. to Girder No. 5P	13-362	3.70 m²	1/2"

AFT Seabay BHD (Fr. 83)

	Transverse Extent	Vertical Extent	TM Report	Approx. Area	New Plate Thickness
1.	Girder No. 5P to Girder No. 6P	From Inner Bottom down a distance of 300mm	13-362	0.50 m²	1/2"

FWD Seabay BHD (Fr. 86)

	Transverse Extent	Vertical Extent	TM Report	Approx. Area	New Plate Thickness
1.	300mm INBD of Girder No.1S to 150mm OTBD of Girder No. 3P	From Bottom Shell at C.L. upwards a distance of 500mm	13-362	1.78 m²	1/2"
2.	300mm INBD of Girder No.1S to 150mm OTBD of Girder No. 3S	Full Extent of Seabay	13-362	2.24 m²	1/2"

Transverse Plate Floor (Fr. 84)

	Transverse Extent	Vertical Extent	TM Report	Approx. Area	New Plate Thickness
1.	C.L. Girder to 150mm OTBD of Girder No. 1P	Full Extent of Seabay	13-362	1.45 m²	3/8"
2.	300mm INBD of Girder No. 3P to Girder No. 5P	Full Extent of Seabay	13-362	2.18 m²	3/8"
3.	Girder No. 5P to Girder No. 6P	From Bottom Shell upwards a distance of 300mm	13-362	0.47 m²	3/8"
4.	C.L. Girder to Girder No. 1S	Full Extent of Seabay	13-362	1.29 m²	3/8"
5.	Girder No. 1S to Girder No. 3S	Full Extent of Seabay	13-362	1.73 m²	3/8"
6.	Girder No. 3S to Girder No. 5S	Full Extent of Seabay	13-362	1.82 m²	3/8"
7.	Girder No. 5S to Girder No. 6S	Full Extent of Seabay	13-362	1.68 m²	3/8"

Notes:

1. *Girder Nos. 1 and 3 intersect plate floor at Fr. 84 by way of "eggbox" construction. Continuity of new floors and girders to be at Contractor's discretion.*

2. *New 4"x1/2" FB or 4"x5/8" FB (as applicable) vertical stiffeners to be fitted as per existing arrangement and end connections, 375mm INBD of Girder No. 5, 600mm INBD of Girder No. 6.*rangement and end connections, 375mm INBD of Girder No. 5, 600mm INBD irder No. 6.

Transverse Stiffening (Fr. 85)

	Transverse Extent	Vertical Extent	TM Report	Approx. Length	Min. New Stiffener
1.	From C.L. a distance of 300mm to port and stbd.	Full Stiffener	13-362	0.6 m	6"x3"x5/16" OA
2.	Full Extent of Seabay [to Girder No. 6 (P/S)]	Full Stiffener	13-362	14.0 m	8"x4"x3/8" OA

Longitudinal Plate Girders

	Transverse Location / Longitudinal Extent	Vertical Extent	TM Report	Approx. Area	New Plate Thickness
1.	C.L. Girder / Frs. 83.5-86	Full Extent of Seabay	13-362	1.07 m²	1/2"
2.	Girder No.1S / Frs. 84-86	Full Extent of Seabay	13-362	0.95 m²	1/2"
3.	Girder No. 3S / Frs. 84-86	Full Extent of Seabay	13-362	0.95 m²	1/2"

Note: new 6"x1/2" FB vertical stiffeners to be fitted at Fr. 85 as per existing arrangement (overlapped onto transverse stiffening).

Temporary Cutouts for New Steel Insertion

Should temporary cropping be required to access spaces, criteria associated with the re-welding, testing and coating of existing insert plates shall be similar to that specified for renewals in Section 4.

SUMMARY OF RENEWALS

	Plating	**Stiffeners**	**Total**
ESTIMATED AREAS IDENTIFIED (1/2" PLT.)	7.50 m²	-	**12.35 m² ~1230 kg**
ESTIMATED AREAS IDENTIFIED (3/8" PLT.)	10.62 m²	-	**10.62 m² ~790 kg**
ESTIMATED LENGTHS IDENTIFIED (6"x3 1/2"x5/16" OA)		-	**0.6 m ~8.8 kg**
ESTIMATED LENGTHS IDENTIFIED (8"x4"x1/2" OA)		-	**14.0 m ~409 kg**

Note: The above table shall only be considered for estimating purposes only, until such time that the final scope of renewals is known.

12.4 Proof of Performance

12.4.1 Inspections

12.4.1.1 The Contractor shall complete ND testing as requested by TCMS, and subject work to final inspections.

12.4.1.2 The Contractor shall establish critical milestones at which the work may be inspected.

12.4.1.3 All work shall be completed to the satisfaction of CCG and TCMS.

12.4.2 Certification

12.4.2.1 TCMS sign offs, a TI-7 has been issued against the vessel for corrosion in this sea bay. Contractor is to ensure that all required inspections are obtained to satisfy the requirements of the attending TCMS surveyors to rescind the TC-7.

12.4.2.2 Classification certifications as specified above for welding procedures.

12.4.2.3 Classification certificates on Lloyds Grade A Steel.

12.5 Deliverables

12.5.1 Documentation (Reports/Drawings/Manuals)

12.5.1.1 As per Section 6, a report, including progress photos and all working drawings are to be compiled.

12.5.2 Spares

12.5.2.1 N/A.

12.5.3 Training

12.5.3.1 N/A.

Annex A

Discharge Sea Bay Piping Interferences

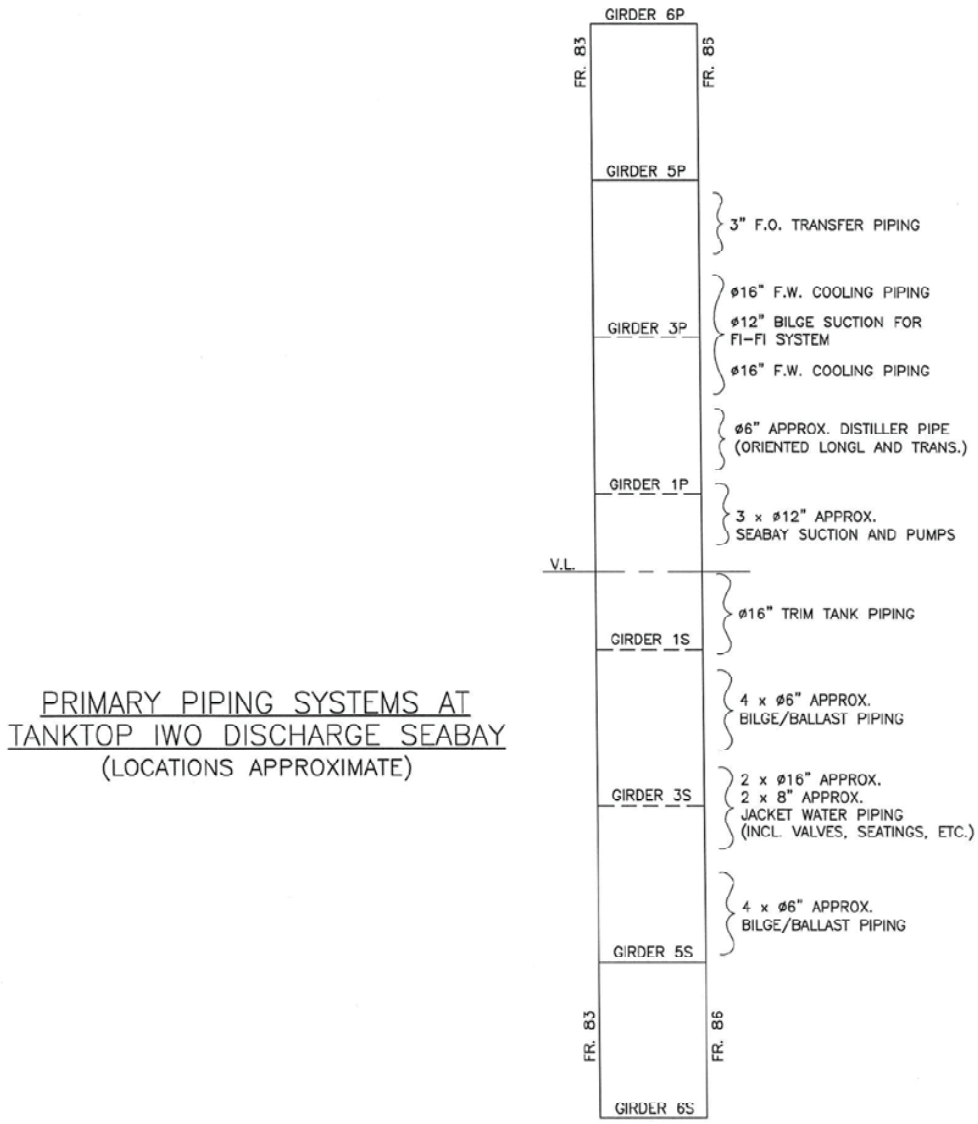

Annex B

Sketches and renderings relevant to areas subject to renewal

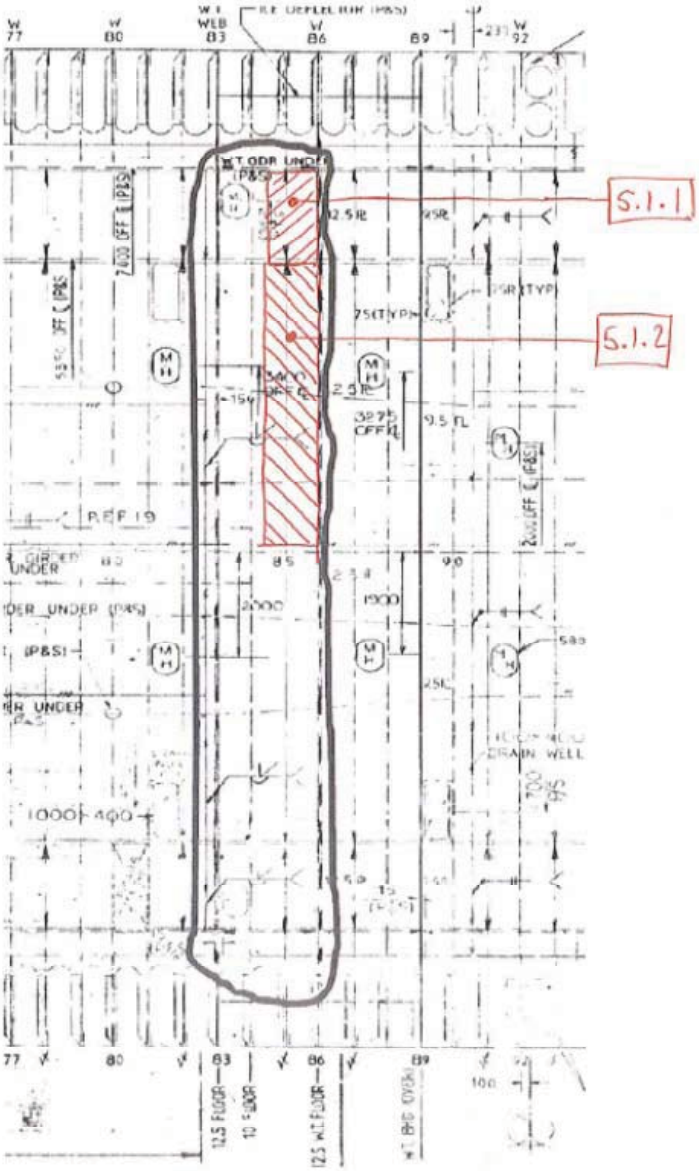

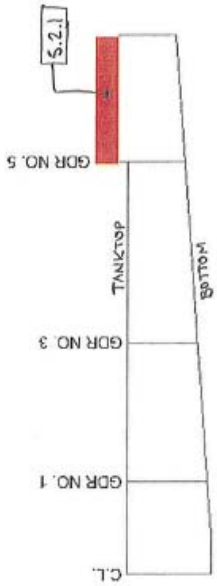

FR. 83 LOOKING AFT

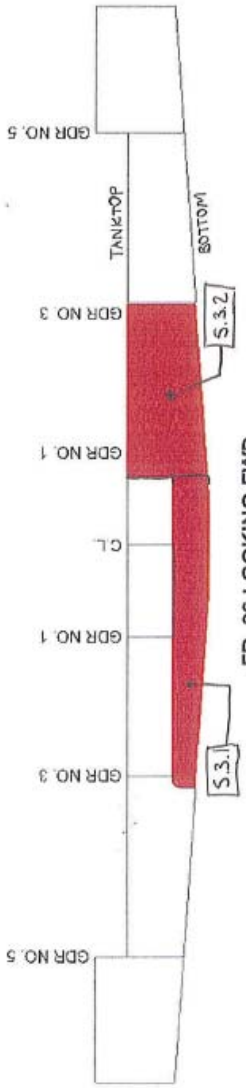

FR. 86 LOOKING FWD

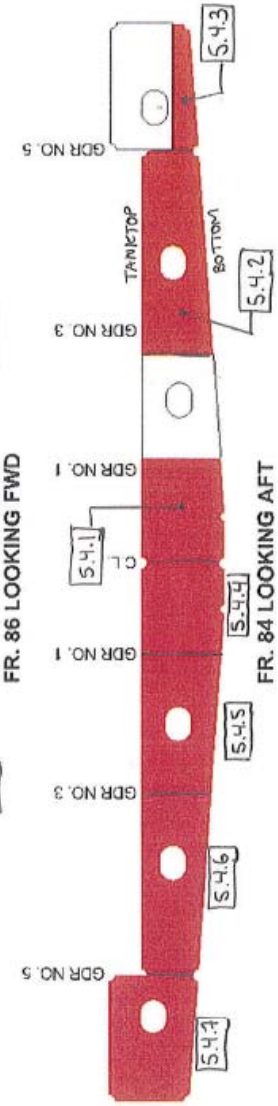

FR. 84 LOOKING AFT

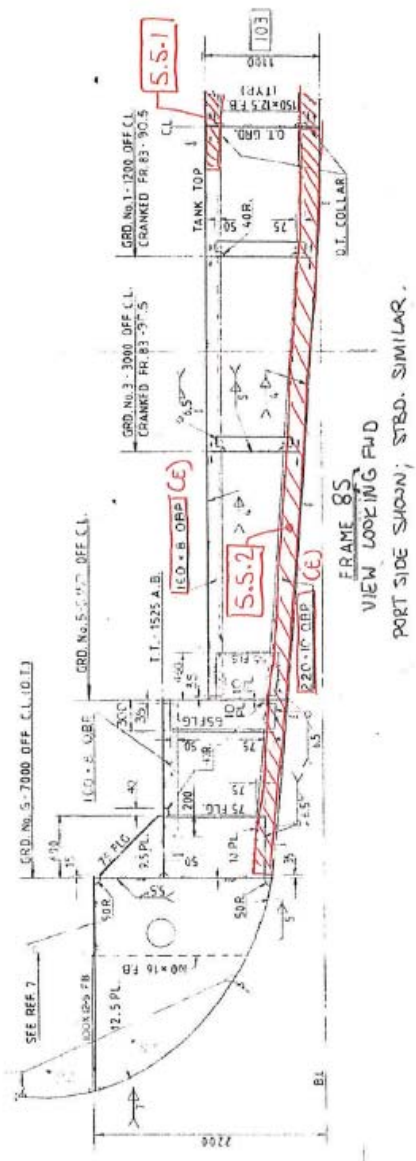
S.S-1
S.S-2
GRD. No. 1 - 1200 OFF C.L. CRANKED FR. 83 - 90.5
GRD. No. 3 - 3000 OFF C.L. CRANKED FR. 83 - 97.5
GRD. No. 5 - 7000 OFF C.L. (O.T.)
TANK TOP
O.T. GRD.
O.T. COLLAR
T.T. - 1525 A.B.
SEE REF. 7
FRAME 85
VIEW LOOKING FWD
PORT SIDE SHOWN; STBD. SIMILAR.

FR. 83
FR. 83.5
S.6-1
FR. 86
C.L. GIRDER
FR. 83
FR. 84
S.6-2
FR. 86
GIRDER NO.1S
FR. 83
FR. 84
S.6-3
FR. 86
GIRDER NO.3S
ALL VIEWED LOOKING TO PORT

View Looking Aft (tanktop plating not shown for clarity)

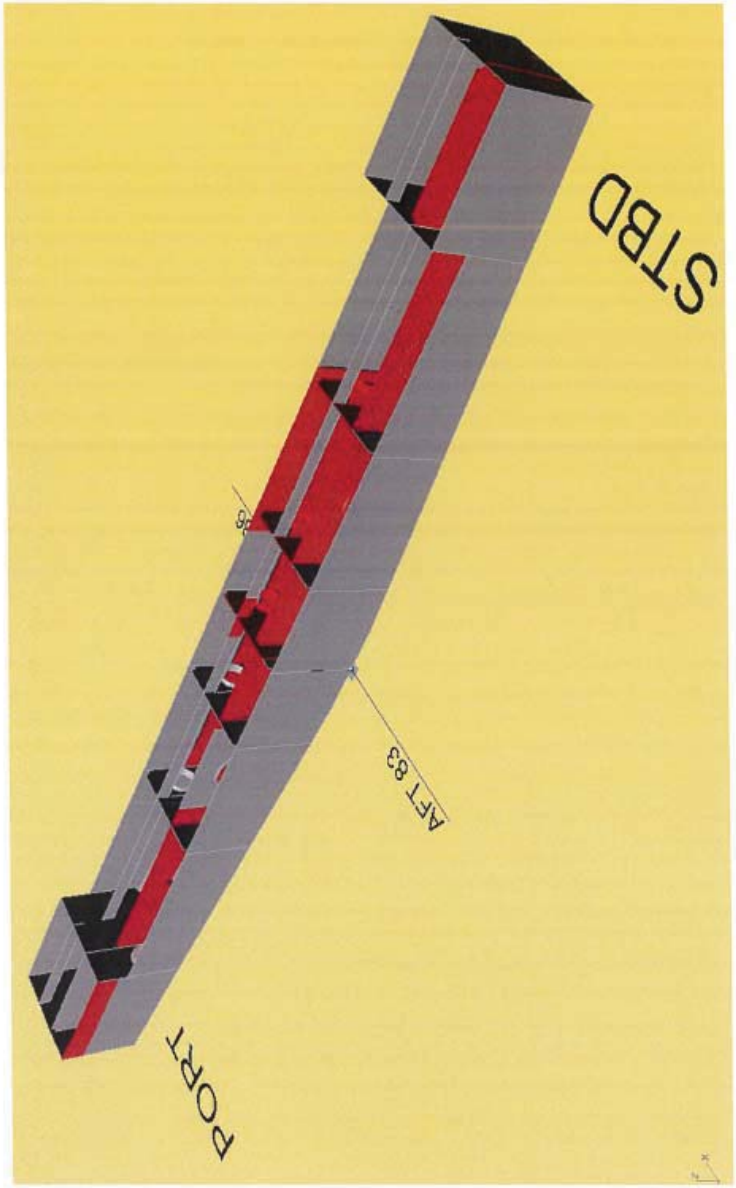

View Looking Forward

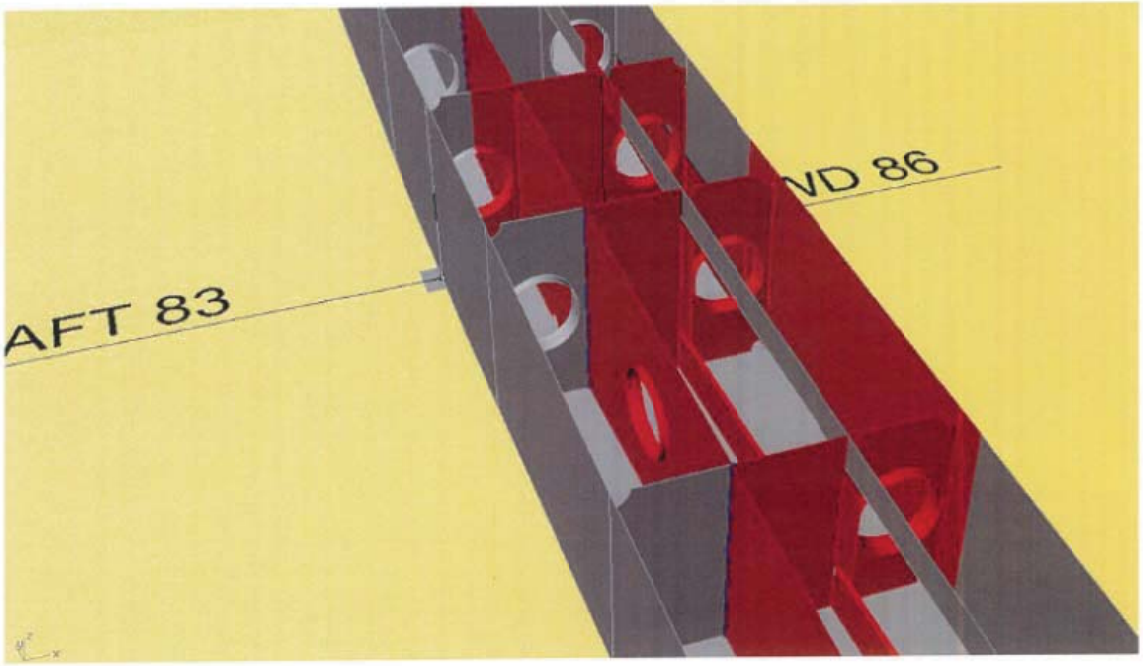

Inset at C.L., in way of Girder Nos. 1S, 3S and at centreline.

Plan view (tanktop plating not shown for clarity)

Annex C

Discharge Sea Bay UT Report

Visual Inspections
Radiography & Ultrasonics
Mag & Penetrant Inspections
Eddy Current Testing
Structural Steel & Torque

Eastern Technical Services Ltd.
PO Box 13517, St. John's, NL., A1B 4B8
709-726-4622 27 Austin St. FAX 726-4626

Technical Reports
Engineering Studies
Municipal Design
Destructive Testing
Insurance Reports

Report

ETS No.:	13 - 362	Copy to:	
Date:	23 May, 2013	Date Rcv'd:	23 May, 2013
Client:	St. John's Dockyard Ltd., 475 Water St., St. John's, NL., A1E 6B5	Inspected by:	M.Tulk - B.Sc Chem ASNT TC-1A UT, ET, MT, PT Level 1 A. Brunetti - M.Sc ASNT TC-1A UT, ET, MT, PT Level 1
P.O. No.:		Directed by:	Fred O'Keefe, B.Sc., C.E.T. C.W.B. W178.2 Visual level III. CAN/CGSB 48.9712 & ASNT TC-1A RT(Gen.& A/S),UT,MT,PT,ET level III. Transport Canada A.M.O. No. 22-91
Attention:	Mr. Roger Head (fax 758-6825)		
Project:	CCGS Henry Larsen Sea Bay		
Testing Required:	Ultrasonic Thickness Inspection	Signed:	Fred O'K[illegible] N.D.E. Supervisor

Remarks

As directed by Mr. Roger Head, our technicians performed ultrasonic thickness readings on the sea bay of the above noted vessel. Results are attached.

Equipment Used
Krautkramer DMS 2 digital thickness gauge (S/N 00MMRRF).
Krautkramer TC560 probe (S/N 00M581).
Various steel calibration blocks (0.100 to 0.500 " step wedge).
Ultragel couplant

Discharge Seaboy Tank Bottom

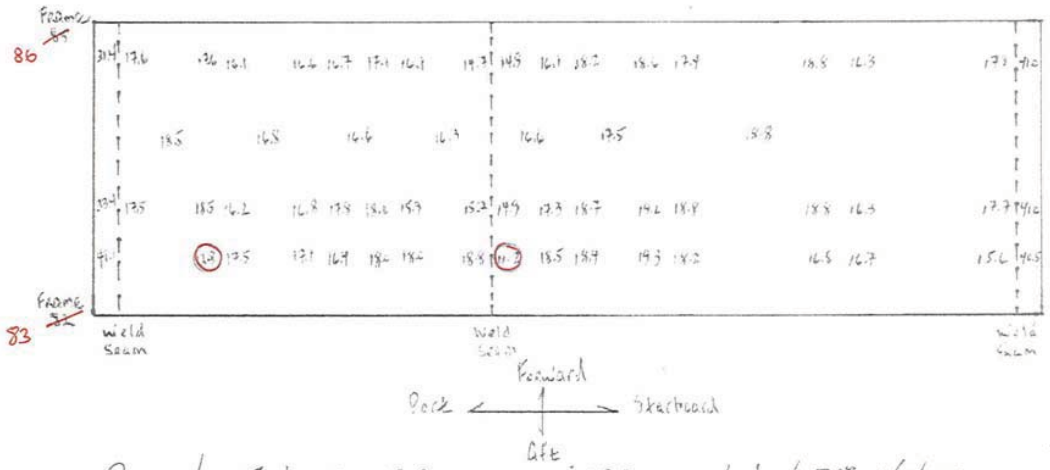

Original Thickness = 19.0mm <13.3mm = at least 30% Wastage

Tank Toe Discharge Seabay

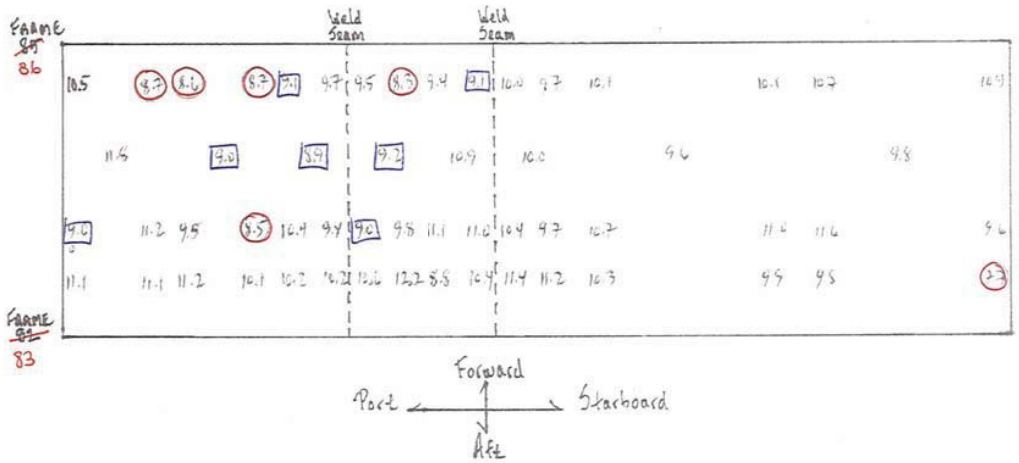

Original Thickness = 12.5 mm < 8.8 = at least 30% Wastage

Discharge Sea Bay
Forward Bulkhead (Fr. 86)
Looking Forward
Port ← → Starboard

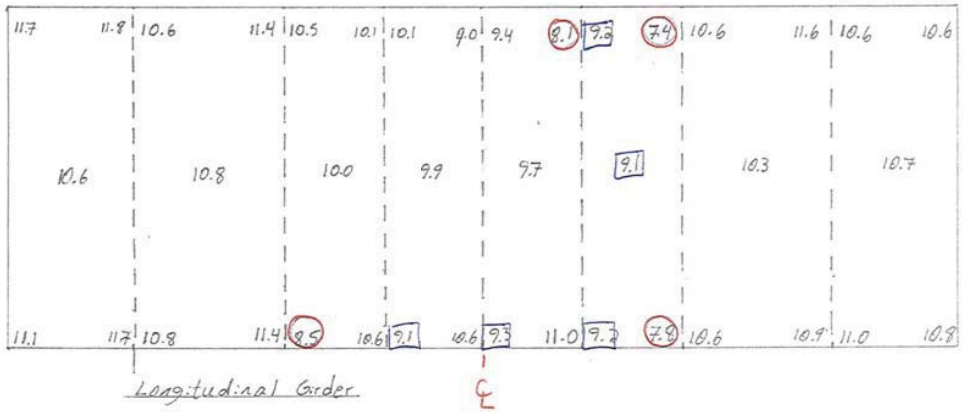

Original Thickness = 12.5 mm

< 8.8mm = at least 30% Wastage

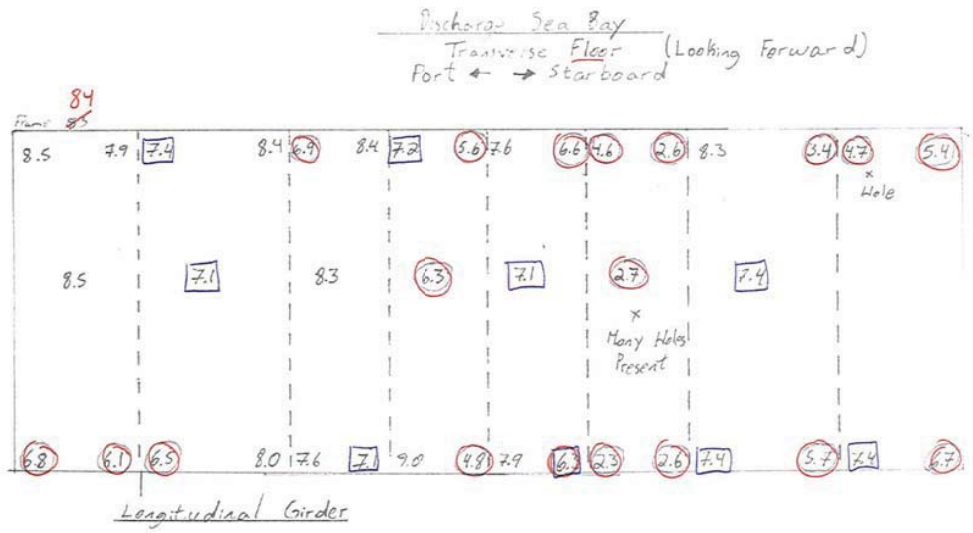

Original Thickness = 10.0mm < 7.0mm = at least 30% Wastage

Discharge Sea Bay
Aft Bulkhead Frame 83
Looking Forward
Port ← → Starboard

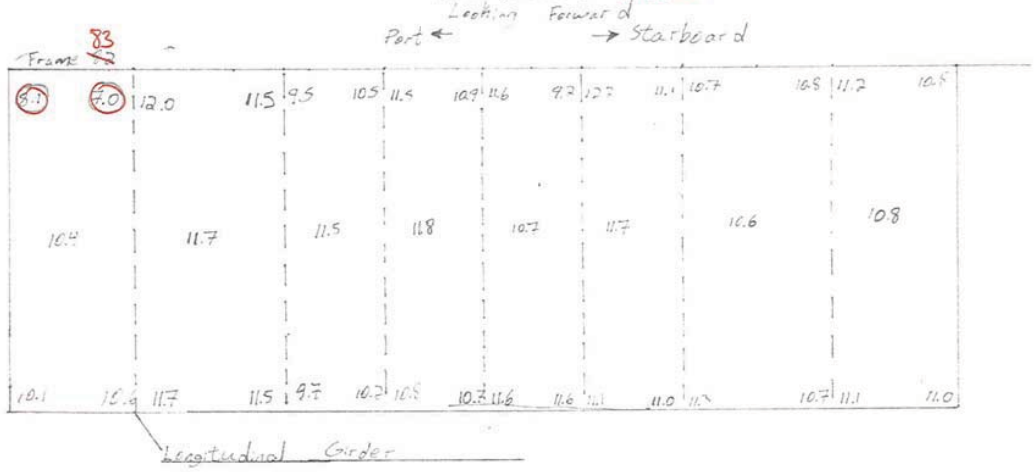

Original Thickness = 12.5mm < 8.8mm = at least 30% Wastage

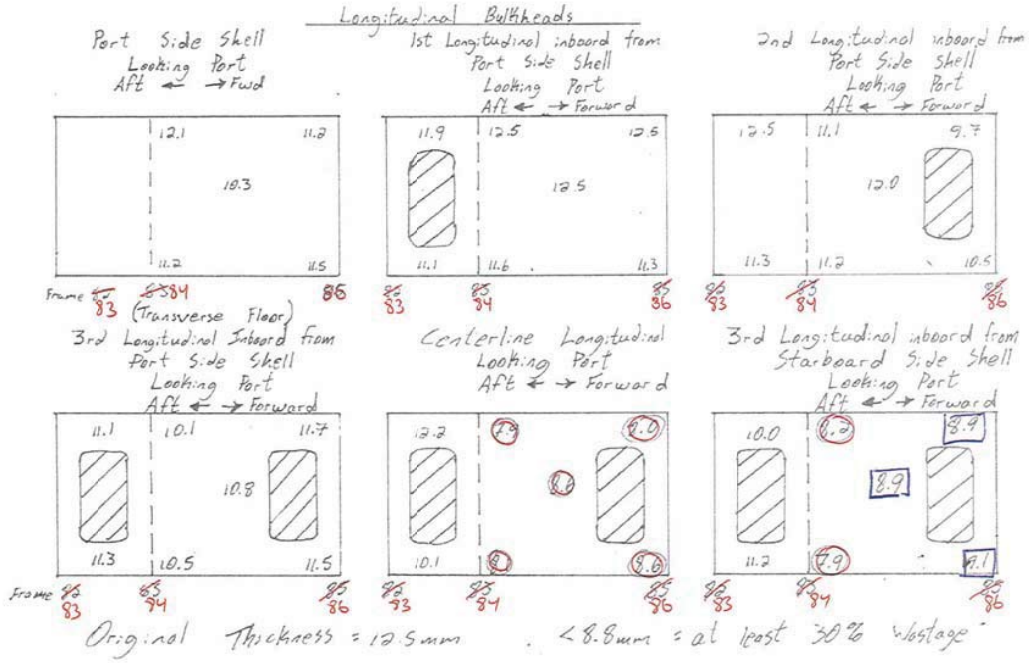
Longitudinal Bulkheads
Port Side Shell
Looking Port
Aft ← → Fwd
12.1
11.2
10.3
11.2
11.5
Frame 83 84 86
(Transverse Floor)
1st Longitudinal inboard from
Port Side Shell
Looking Port
Aft ← → Forward
11.9
12.5
12.5
12.5
11.1
11.6
11.3
83 84 86
2nd Longitudinal inboard from
Port Side Shell
Looking Port
Aft ← → Forward
12.5
11.1
9.7
12.0
11.3
11.2
10.5
83 84 86
3rd Longitudinal Inboard from
Port Side Shell
Looking Port
Aft ← → Forward
11.1
10.1
11.7
10.8
11.3
10.5
11.5
Frame 83 84 86
Centerline Longitudinal
Looking Port
Aft ← → Forward
12.2
7.3
9.0
10.1
9.0
83 84 86
3rd Longitudinal inboard from
Starboard Side Shell
Looking Port
Aft ← → Forward
10.0
6.2
8.9
8.9
11.2
7.9
7.1
83 84 86
Original Thickness = 12.5mm . < 8.8mm = at least 30% wastage

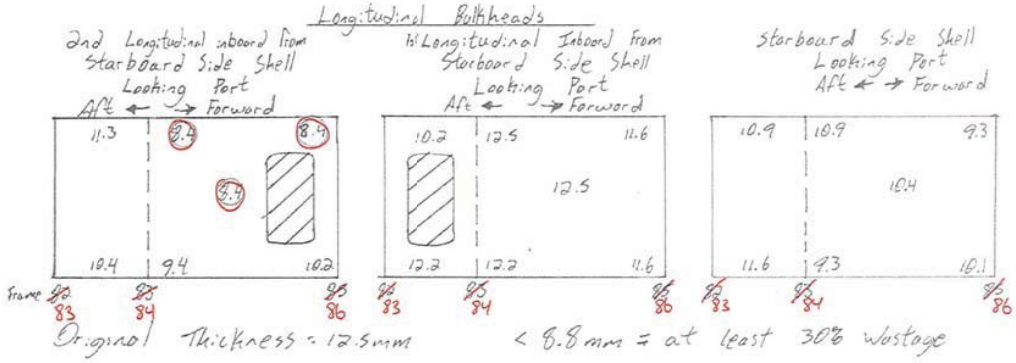
Longitudinal Bulkheads
2nd Longitudinal inboard from Starboard Side Shell
Looking Port
Aft ← → Forward
11.3
9.4
8.4
9.7
10.4
9.4
10.2
Frame 82 83
85 84
85 86
1st Longitudinal Inboard from Starboard Side Shell
Looking Port
Aft ← → Forward
10.2
12.5
11.6
12.5
12.2
12.2
11.6
85 83
85 84
85 86
Starboard Side Shell
Looking Port
Aft ← → Forward
10.9
10.9
9.3
10.4
11.6
9.3
10.1
85 83
85 84
85 86
Original Thickness = 12.5mm
< 8.8mm = at least 30% wastage

Transverse Stiffener at Frame 84

Looking Forward

Port | Starboard

8.4	8.4	7.3	7.8	8.2	6.4	6.7	7.4	4.3	6.6	6.8	8.7	7.0	6.3	6.0	7.1	6.8	7.6

Original Thickness = ~~9.5mm~~ < 6.7 = at least 30% Wastage

HP 160x8 as per drawings 0.7 x 8.0 = 5.6 mm
0.75 x 8.0 = 6.0 mm

Transverse Deck Stiffener at Frame 84

Looking Forward

Port | Starboard

6.4	3.6	3.8 *	– **	5.3	4.3 *	6.0	5.0	5.0 *	– **	– **	4.9 *	5.3 *	2.1 *	5.9	2.1 *	– **	4.7

Original Thickness = ~~9.5mm~~ ~~< 6.7~~ 7.0 = at least 30% Wastage

* Denotes Hole HP 220x10 as per drop

** Denotes Too Many Holes For Measurement

Discharge Sea Bay
Vertical Stiffeners on Watertight Bulkhead at Frame ~~85~~ 86

	1st	2	3	4	5	6	7	8	9	10	11	12th
High	6.3	10.3	8.2	8.5	8.3	8.7	9.4	10.7	8.3	9.0	6.6	9.7
Low	7.3	10.8	9.3	8.3	9.2	8.3	8.1	10.8	7.6	9.9	10.0	9.4

Note*: Stiffeners are labeled 1-12 going from Port most (number 1) to Starboard most (number12). Two shots were taken on each, one high and one low.

9.5mm x 0.7 = 6.6
12.5mm x 0.4 = 8.8

5

13.0 BUBBLER PIPING RENEWAL

13.1 Identification (CI #57)

13.1.1 The aim of this section is to replace the majority of the Air Bubbler Discharge piping, as identified on Drawing 22-0716-01-MU.

13.2 References

13.2.1 Equipment Data

13.2.2 Drawings

Drawing Number	Description	Format
22-0716-01-MU	Air Bubbler System Diagram (Mark-Up)	PDF
22-0716-01-R2	Air Bubbler System Diagram (Post Refit)	PDF
23-0716-01-R1	Air Bubbler System Arrangement (Original)	PDF
23-0716-01-R2	Air Bubbler System Arrangement (2 sheets) (Post Refit)	PDF
12-0001-01	Framing Expansion	PDF
12-0003	Web Frames 61-125	PDF
12-0004	Web Frames 125-175	PDF
12-0013-01	Transverse Bulkheads Fr.61 & 89	PDF
12-0014-01	Transverse Bulkheads Fr. 127 & 140	PDF
12-0015-01	Transverse Bulkheads Fr.150 & 265	PDF
12-0016-01	Shell Expansion (AFT)	TIF
12-0016-02	Shell Expansion (FWD)	TIF
12-0018-01	Stringer Plan	PDF
1-1110-19-9401	Structural Arrangement in way of Stabilisation and Heeling Tanks	PDF
	Air Bubbler Pipe Removal Guide	PDF

13.2.3 Regulations

13.2.3.1 Canada Shipping Act, 2001.

13.2.3.2 Marine Machinery Regulations.

13.2.3.3 Hull Construction Regulation.

13.2.3.4 Hull Inspection Regulations.

13.2.3.5 Artic Shipping Pollution Prevention Regulations.

13.2.4 Standards

13.2.4.1 Lloyd’s Register Rules and Regulations for Steel Ships.

13.2.4.2 International Association of Classification Societies Requirements Concerning Pipes and Pressure Vessels.

13.2.4.3 International Association of Classification Society Polar Class Rules.

13.2.4.4 Threaded pipe to be in accordance with Lloyd's Register standard Rules and Regulations for Steel Ships, Chapter 12. Section 2.3 sub part 2.3.1, 2.5, 12.2.1, 2.10, table 12.2.6, 2.11, for piping design requirements.

13.2.4.5 The Contractor shall follow the general notes of Diagram's and Drawings.

13.2.4.6 All welding to be to a standard acceptable to, and approved by Transport Canada, and appropriate to the application. In general, welding shall be in accordance with all applicable sections of Lloyds Registry Rules and Regulations for the Classification of Ships and the Lloyds Registry Rules for the Manufacture, Testing and Certification of Materials.

13.2.4.7 All steel pipe to be in accordance with ASTM A.53.

13.2.4.8 All structural steel to be Lloyd's Register Grade A unless denoted to be Grade E or Grade EH36 Higher Tensile Steel.

13.2.4.9 Contractor's welders shall be certified to Canadian Welding Bureau standards for all welding processes used. Certification shall be presented to Transport Canada and the Owner's Representative upon request.

13.2.5 Quality Assurance Standards

13.2.5.1 The work shall be done complete in accordance with the Contractor's internal, approved, quality assurance standards and practices.

13.2.5.2 The work shall be completed to a standard acceptable to the Inspection and Technical Authorities or there delegates.

13.3 Technical

13.3.1 **General**

13.3.1.1 The Contractor shall take measurements of all dimensions and radii of all pipe/fitting being replaced, prior to removal.

13.3.1.2 Before proceeding with any work, care and protection will be done to protect the surrounding area, fire proofing, covering of electrical for dust, tents for dust control to prevent damage and rework of surrounding area.

13.3.1.3 All systems shall be locked out and tagged out electrically and mechanically as required by systems engineer.

13.3.1.4 Open ended piping to be closed when not working for care and protection and prevention of foreign matter introduced into piping systems.

13.3.1.5 All pipe hangers removed during pipe replacement shall be replaced back to original.

13.3.1.6 All steel pipe bending shall be five diameters (5D) as a minimum, unless otherwise determined through pipe measurement.

13.3.2 Structural Work-in-Way

13.3.2.1 Unless specifically stated elsewhere in this specification, all piping shall be removed through accesses cut through the ship's shell plating and structure. The Contractor shall remove each identified section of shell plating and supporting structure as one block, to reduce the number of welds required to repair the structure on completion of the work. All structure to be removed is identified on Drawing 12-0001-01, and in Sketches #3-7 of the Air Bubbler Pipe Removal Guide. Web frames are only to be removed for replacing the lower level piping.

13.3.2.2 The Contractor shall only remove shell structure (port and starboard) from one subdivision at a time. For example; Frame 89 to 108 or Frame 108 to 127. The bubbler pipe shall be cut loose from subdivision bulkheads by removing the pipe to bulkhead welds, thereby leaving the bulkhead intact. Alternate methods may be proposed by the Contractor for surveyor approval.

13.3.2.3 Removal of lower piping that is integral to the web frames requires the web frame to be removed in accordance with the example shown in Sketch #1 of the Air Bubbler Pipe Removal Guide, tailored to the specific location of the pipe. Care shall be taken to avoid damaging adjacent structure, such as the Tank Top, when removing pipes that are close to that adjacent structure. The extent of the removal line represents the recommended amount of structure that can be safely removed without damaging surrounding scantlings. Depending on the methods used, the Contractor may propose an alternate extent of removal for surveyor approval.

13.3.2.4 Where the lower piping passes inboard of the web frame, the entire section of the web frame adjacent to the pipe shall be removed, as shown in the example in Sketch #2 of the Air Bubbler Pipe Removal Guide. The Contractor shall install temporary bracing as shown prior to removal of the web frame.

13.3.2.5 All upper piping shall be removed through the upper openings shown in Sketches #3-7 of the Air Bubbler Pipe Removal Guide. Note that the upper openings are only between adjacent web frames, and span the Lower Deck and No.4 Ice Stringers. If the Contractor requires these openings to be large either vertically or longitudinally, surveyor approval shall be obtained prior to removing additional structure.

13.3.2.6 After structure has been removed the edges of the remaining structure shall be ground smooth and straight and prepared with grooves as necessary to provide for full penetration welds that replace the strength of the original structural member.

13.3.2.7 All replacement material shall be equal to, or better than, that which is removed. This includes but is not limited to material strength, toughness, chemical composition, condition of supply, and testing and certification. All material shall be in accordance Lloyds Registry Rules for the Manufacture, Testing and Certification of Materials.

13.3.2.8 In general, shell plating and ice stiffening members are Grade EH36 high strength steel. However; the Contractor is responsible for determining the applicable grade of steel from existing drawings prior to removal. Where lower grades of material are found to be used, a commensurate lesser grade can be used as replacement.

13.3.2.9 Welding of EH36 material shall performed with Grade 3Y consumables as per LR Rules for the Manufacture, Testing and Certification of Materials, Chapter 11, Section 1, Table 11.1.1.

13.3.2.10 For costing purposes, for the structural work, the Contractor shall assume that:

- [80%] of the lower AB piping is integral to the web frames;
- [20%] of the lower AB piping passes inboard of the web frames; and
- All upper AB piping passes inboard of the web frames.

13.3.3 **A B Piping**

13.3.3.1 The Contractor shall remove and replace all Air Bubbler piping indicated on Drawing 02-0716-01-MU. This shall include all AB Discharge piping, smaller than 600 mm, aft of Bulkhead 165, and all 125 mm piping located forward of Bulkhead 165.

13.3.3.2 The Contractor shall fabricate/weld as much of the pipework as possible in a workshop environment, to better control the quality of the welding. The maximum length of the pipe sections to be determined by the shipyard, based on maximum lifting and slinging capacity, and the size of the hull penetration necessary for removal/replacement of the AB piping. Temporary slinging arrangements, as required, shall be installed in each tank to allow the piping to be removed and replaced.

13.3.3.3 The Contractor shall determine individual pipe spools to ensure any welding carried out inside the ship is on straight sections of pipe only. All pipe bends shall be welded into adjacent sections of straight pipe in a workshop environment to ensure weld quality is maintained.

13.3.3.4 Where branch pipes from the 500 mm, 400 mm, 350 mm, and 300 mm pipes are required, short, straight lengths of branch pipe shall be welded to the main pipe in a workshop environment, and the remainder of the branch line attached once the main pipe is welded in place.

13.3.3.5 All AB piping aft of Bulkhead 165 that is being removed, shall be removed:

- Through the hull using the accesses described in Sketches #1-#7 of the Air Bubbler Pipe Removal Guide for pipes located inside tanks.

- Through the Main Engine Room shipping routes for piping located in the Electrical Workshop and the Engineer's Workshop.
- Through the existing tank accesses for piping located aft of Bulkhead 89.

13.3.3.6 All 125 mm piping located forward of Bulkhead 165 that is being removed, shall be removed through the existing compartment access routes.

13.3.3.7 All 125 mm pipe hull connections shall be removed by grinding of the inner and outer welds only. New 125 mm pipe shall be connected to the hull in accordance with Detail 'A' of Drawing 22-0716-01. All welds are to be tested in a manner acceptable to Transport Canada. Where excessive hull corrosion is evident, in way of the hull penetrations, the hull plating shall be cut back to a minimum of 300 mm from the centre of the hull penetration and replaced with new Grade E or Grade EH36 steel meeting the specification of the original hull. External hull welds shall be ground flat to the faired hull surface.

13.3.3.8 All AB piping located in No.5 Fuel Oil Tanks (Port and Starboard), aft of Bulkhead 83, shall be removed without replacement. The eight hull penetrations (four per side) served by this piping shall be permanently closed using an insert plate. The insert plate shall be EH36 steel sized to match the surrounding hull. All exterior welds shall be ground flat to the faired hull surface. The bulkhead penetration at Bulkhead 83, and any web frame penetrations, where the AB piping was welded into the web frame, shall be permanently repaired using a Grade 'A' insert plate.

13.3.3.9 The 300 mm piping located between Frames 83-89, shall be cut at the WT boundaries of the Sea Bay (Bulkheads 83 and 89). A new section of 300 mm piping, 300 mm long, shall be installed in the existing opening at Bulkhead 89. The 300 mm piping shall protrude from Bulkhead 89 by 300 mm, and shall be capped with a radiused cap piece. The 125 mm pipe shall be connected to the 300 mm pipe at this cap end.

13.3.3.10 The 300 mm piping from Frame 121 to Bulkhead 127 shall be shipped through the hull opening identified in Sketch #4 of the Air Bubbler Pipe Removal Guide. If the piping at Frame 124 is welded into the web frame, the pipe shall be cut either side of the web frame, for removal. Web Frame 124 is not to be cut to remove this section of pipe.

13.3.3.11 The following Isolating Valves on the Discharge side of the Air Bubbler compressor are to be replaced:

- AB-010-350 Hydraulically Operated Butterfly Valve;
- AB-011-350 Hydraulically Operated Butterfly Valve;
- AB-012-350 Hydraulically Operated Butterfly Valve; and
- AB-013-350 Hydraulically Operated Butterfly Valve.

13.3.3.12 For costing purposes, the Contractor shall assume the following amount of AB Piping and Fittings shall be replaced:

- 125 mm, Schedule 160:

    - Piping = 250 metres (assuming approx.4 m per discharge);
    - 45° Elbow = 150 (assuming 3 per discharge);
- 300 mm, Schedule XS:
    - Piping = 40 metres;
    - 45° Elbow = 2;
    - End Caps =10;
- 350 mm, Schedule XS:
    - Piping =40 metres;
    - 45° Elbow = 7;
    - 90° Elbow = 10;
    - Tee = 4;
    - Bolted Flanges = 6
- 400 mm, Schedule 40:
    - Piping = 10 metres;
    - End Caps = 2;
- 500 mm, Schedule 30:
    - Piping = 50 metres;
    - 45° Elbow = 10;
    - 90° Elbow = 4;
    - Bolted Flanges = 4;
- Reducers:
    - 300-125 mm = 2;
    - 350-300 mm = 8;
    - 400-300 mm = 2;
    - 500-350 mm = 2;
    - 500-400 mm = 4;
    - 600-500 mm = 8;
- Valves:
    - AB-010-350 Hydraulically Operated Butterfly Valve;
    - AB-011-350 Hydraulically Operated Butterfly Valve;
    - AB-012-350 Hydraulically Operated Butterfly Valve; and
    - AB-013-350 Hydraulically Operated Butterfly Valve.
- Hull Penetrations:
    - 20 hull penetrations shall be assumed to need the hull plating to be replaced.
- Welds:
    - Pipe – Pipe, Butt Welds:
        - 125 mm = 300;
        - 300 mm = 40;
        - 350 mm = 50;
        - 400 mm = 20;
        - 500 mm = 50;
        - 600 mm = 4 (600-500 mm reducers);
    - Pipe-Bulkhead, Fillet Welds:
        - 125 mm = 56 (hull penetrations);
        - 300 mm = 6;
        - 350 mm = 4;
        - 400 mm = 4; and

- 500 mm = 16.
-

Pipe lengths are based on the actual lengths to be replaced. The Contractor should include their estimated wastage rate to install the lengths of pipe indicated and include this in their cost estimate.

Pipe welding is based on existing pipe spools, as indicated on Drawing 23-0716-01. The Contractor may propose alternative welding based on their assumed pipe lengths. All assumptions must be stated in the cost estimate.

13.4 Proof of Performance

13.4.1 Inspections

13.4.1.1 The Contractor shall visually inspect all pipes and fittings directly connected to the sections being removed, for damage prior to closing up the system. All damage is to be repaired to the satisfaction of the Inspector. The Contractor shall assume two [2] sections of damaged pipe for costing purposes.

13.3.1.2 Prior to any operational test, the Contractor is to ensure system alignment is complete, and that the compressors are operational.

13.4.2 Testing/Trials

13.4.2.1 Prior to undocking, each portion of replaced piping will be inspected for completeness, and will be operationally tested to normal operating pressures and vacuums, for leaks. Repairs shall be made when leaks are present and a retest performed. This shall be repeated until all leaks are permanently repaired. All pressure is to be taken off of system before repairs are attempted. All systems are to be tested as operational prior to undocking.

13.4.2.2 The Contractor shall conduct non-destructive testing on all welds in way of hull, deck and bulkhead penetrations in a manner agreed with Transport Canada. As a minimum this shall be a soap and bubble test at the welded area of the deck. 80 PSI of air shall be applied to the weld on one side, and a liquid soap solution applied on the opposite side. All leaking welds are to be ground out and re-welded to the satisfaction of the Surveyor.

13.4.2.3 Upon completion of the air test, the contractor shall undertake a functional test of the systems to check for leaks from all connections opened during the refit. The test shall be in a manner acceptable to, and agreed with, Transport Canada and the Inspection and Technical Authorities or there delegates.

13.4.2.4 For cost estimating purposes, the Contractor shall assume that:

- All shell plating welds are to be X-rayed;
- All bulkhead penetration welds are to be inspected by dye-penetrant or magnetic particle inspection, and soap tested;
- 25% of structural welds are to be inspected by dye-penetrant or magnetic particle inspection;

- The remaining structural welds are to be visually inspected;
- All pipe welds are to be inspected by dye-penetrant or magnetic particle inspection, and soap tested once the system is fully installed.

13.4.3 Certification

13.4.3.1 Systems requiring statutory approval shall be tested and certified, as required by Transport Canada.

13.5 Deliverables

13.5.1 Documentation (Reports/Drawings/Manuals)

13.5.1.1 The Contractor shall provide a copy of the test record for each section of AB piping, signed by the Contractor's authorised representative, the Transport Canada Marine Inspector, and the Inspection and Technical Authorities or there delegates.

13.5.1.2 The Contractor shall provide a copy of all test records for the anti-syphonic valves, signed by the Contractor's authorised representative, the Transport Canada Marine Inspector, and the Inspection and Technical Authorities or there delegates

13.5.2 Spares

13.5.2.1 N/A.

13.5.3 Training

13.5.3.1 N/A.

14.0 ICCP SYSTEM RENEWAL

14.1 Identification (CI #102)

14.1.1 This section covers a) the necessary procurements and work to repair, update as necessary, test and reactivate the impressed current hull corrosion protection (ICCP) system, and b) to remove spent sacrificial anodes and supply and fit new ones in their place.

14.2 References

14.2.1 Equipment Data

14.2.1.1 The ICCP system consists of an obsolete “Skarpenord” power/control panel, 575/3/60 input, 300 A DC output, six anodes, and two reference electrodes. The panel is located in the auxiliary machinery space. Shaft grounding brush gear is fitted about fr.40 on the intermediate propeller shafts port and starboard, the gear consists of grounding brushes and a potential brush connected to a millivolt meter at the control panel. The anodes and reference electrodes are to be renewed, see sec. 3.3.

14.2.2 Drawings

Drawing Number	Description	Electronic Number
34-0823-01	Cathodic Protection System	
	Anode MPE Cathodic C 12300 as modified	
	Reference electrode MPE Cathodic C12350	
	Larsen ICCP 2014	

14.2.3 Regulations

14.2.3.1 Transport Canada TP127
Lloyds Rules
Local safety regulations applicable to the shipyard.

14.2.4 Standards

14.2.4.1 All welding is to be to commercial standards : CSA W47.1 and CSAW59 for steel. All welding inspection is to be to commercial standards: CSA Standards W178.1 and CSA W178.2.

14.3 Technical

Contractor shall engage the services of:

14.3.1 M. Yeatman, Andover Management Inc.
7 Canal St., Dartmouth, NS B2Y 2W1, cell 902 488 4119, andover@eastlink.ca
to supervise the work, test on completion, and report to CCG.
Prior to work, contractor shall contact the Chief Engineer to carry out isolation and lock-out of power supply to the ICCP system.

14.3.2 New ICCP anodes and reference electrodes.
Contractor shall purchase four new anodes and two new reference electrodes from MPE Cathodic AS, Moss, Norway, www.mpecathodic.no, in accordance with the supplied drawings. It is noted that the existing anode backing plates are incompatible with the new type anode, they must be cut out of the hull and disposed of. The new backing plates are integral with the cofferdam and part of MPE's supply. MPE will manufacture the backing plates to suit the shell opening diameter and thickness. Cofferdams for anodes and reference electrodes shall be supplied with material certificates. The new reference electrodes require smaller shell openings, and contractor shall make and fit compensating rings per the drawing supplied with this specification. The new anodes shall be fitted at frames 56-57 and 67-68 P & S, replacing the existing four aft ones.

14.3.3 The existing anodes at frs. 128-129 P & S will not be renewed. Contractor shall remove them together with the backing plates and cofferdams, and the associated cables. The resulting hole shall be trimmed with a suitable "V" weld preparation, and an insert plate of equal thickness and grade of steel fitted flush with the shell plating, with full penetration weld, to the satisfaction of the TCMS and/or Class surveyor.

14.3.4 The remaining four anode and two reference cables are to be disconnected in the panel and at the old cofferdams before removal of the anodes and reference electrodes with cofferdams, and tested for grounds and discontinuity. A separate price to be negotiated for replacement of any defective cables by 1379 action. The cables are to be tagged to show which anode/electrode they go to.

14.3.5 **New ICCP power/control panel**
Contractor shall disconnect and remove the existing control panel, and purchase and fit a new panel in the same location, modifying the seating as necessary. Approved suppliers for the new panel are MPE Cathodic (see 14.3.2) or equivalent.

The new panel shall have the following characteristics:
Input 575/3/60 VAC, output 200 ADC, 4 anode outputs, 2 reference inputs; Auto, Standby and Manual mode operation; adjustable reference set point, under-protect and over-protect alarm settings.
The new panel shall contain a dual millivolt meter for registering the shaft potentials, alternatively a separate meter can be supplied and mounted on or near the ICCP panel.

14.3.6 After installation of new anodes and ref. electrodes with cofferdams, all cables shall be connected in the cofferdams, and the cofferdams packed with Vaseline and secured watertight. Prior to reconnecting at the panel, FSR will do resistance and potential tests before and after refloating the vessel.

14.3.7 Contractor shall purchase and fit two new shaft grounding gears. The new grounding gear shall be fitted in the same location as the existing, about frame 40 P & S on the intermediate propeller shafts, dia. 480 mm. Each set shall consist of a double brush holder for grounding and a single holder for potential pick-up, complete with three silver graphite 20 X 10 mm brushes. The new slip rings shall be silver plated. The grounding and potential brush holders shall be insulated from their mounting posts. Approved suppliers are MPE Cathodic (see above), and Jastram Technologies (see above). The cables from the brush gear to the millivolt meter shall be checked, and a separate price negotiated for replacing them if found necessary.

14.3.8 The rudder stock grounding cable is to be inspected and a separate price negotiated for replacing it if found necessary.

14.3.9 For remediation of paint and dielectric shields after installation of new anodes and ref. electrodes, please refer to Hull Coating Specification Section 15.

14.3.10 After refloating the vessel, power will be restored to the ICCP panel by contacting Chief Engineer and following lock out tag out procedures, and the FSR shall reconnect the anode and ref. electrode cables and do a full system test assisted by the contractor.

14.3.11 New zinc sacrificial anodes (20 in number for the Sea Bay, 20 for the Rudder EFL Z-26 or equal) shall be supplied and fitted in the sea chests and on the rudder, after removing the spent ones. One anode EFL Z-12 or equal shall be fitted in each structural cell of the SW Main Discharge Sea Bay (double bottom frs.83-86). Anodes shall meet MILSPEC A18001.

14.4 Proof of Performance

14.4.1 Inspections

14.4.1.1 Contractor shall assist CCG and its representatives to inspect the work after completion. In particular the hull anodes (ICCP and sacrificial) and reference electrodes shall be clean and free of overspray before the vessel is refloated. See section 15 for hull paint and dielectric shields.

14.4.2 Testing/Trials

14.4.2.1 The Contractor is to arrange for the FSR is to perform full system function test on refloating of vessel. The Contractor shall provide the services of an electrician as per Pipework Anti-fouling specification.

14.4.3 Certification

14.4.3.1 The Contractor is to arrange TCMS for presentation of weld procedures, approvals for installation and scheduling TCMS inspection as required during fitment and testing of completed installation.

14.5 Deliverables

14.5.1 Documentation (Reports/Drawings/Manuals)

14.5.1.1 Documentation shall include FSR report, drawings of the new anodes and reference electrodes, and the instruction manual for the new ICCP panel.

14.5.1.2 The Contractor is to produce an “as fitted” system drawing/drawings in Autocad 2011 and deliver as an electronic copy as well as two paper copies. The drawing is to detail the new panel, cofferdams, anodes, electrodes and wiring runs.

14.5.2 Spares

14.5.2.1 N/A.

14.5.3 Training

14.5.3.1 FSR is to instruct Chief Engineer and Electrical Officer in the operation of the system and to record original readings as well as explanation of expected readings including adjustment of system once stabilized.

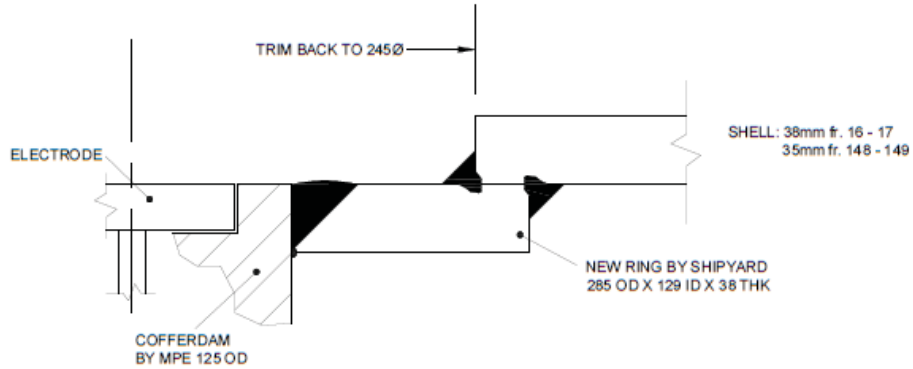

NEW REF. ELECTRODE INSTALLATION FRS 16-17 AFT PORT, 148-149 FWD STBD
MPE DWG C12350 APPLIES

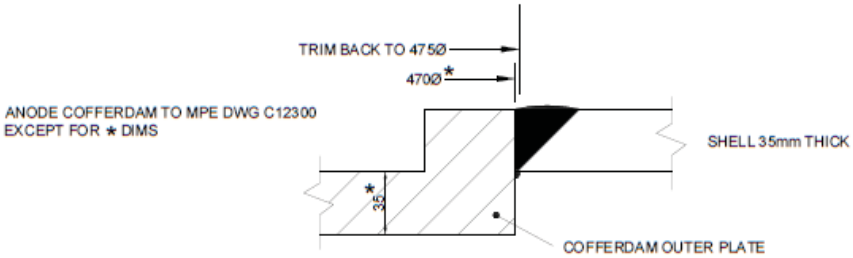

NEW ANODE INSTALLATION FRS 56-57 P&S, 67-68 P&S
ANODES FRS 128-129 P&S SHALL BE REMOVED AND REPLACED BY
35mm BLANKS TO LOCAL SURVEYOR'S SATISFACTION

CONTRACT DESIGN
THIS DRAWING IS NOT FOR CONSTRUCTION PURPOSES. TO BE USED FOR GUIDANCE PURPOSES ONLY.

E.Y.E. MARINE CONSULTANTS
HENRY LARSEN
LARSEN
ICCP 2014

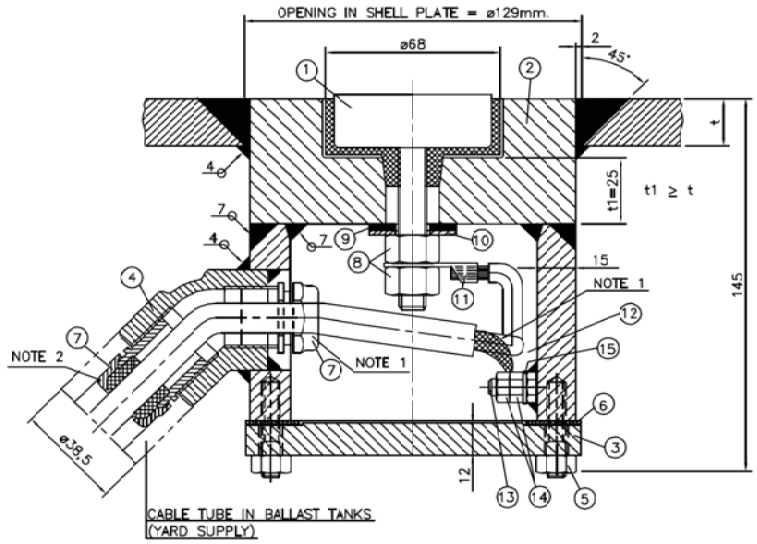

FOR INSTALLATION IN BALLAST TANKS

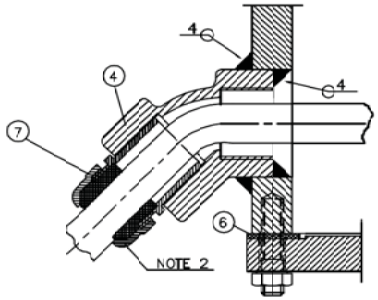

FOR INSTALLATION IN VOID SPACE

NOTES:

1. FOR INSTALLATION IN BALLAST TANKS THE GLAND (POS. NO. 7) TO BE MOUNTED INSIDE THE COFFERDAM.
2. FOR INSTALLATION IN VOID SPACE THE GLAND (POS. NO. 7) TO BE MOUNTED OUTSIDE THE COFFERDAM.
3. CABLE SCREEN TO BE GROUNDED.

LEGEND:

V SUPPLIED WITH ELECTRODE
O SUPPLIED WITH COFFERDAM

	O	1	CABLE SHOE	15	TINNED COPPER
	O	2	NUT	14	STAINL. ST. M6
	O	1	BOLT	13	STAINL. ST. M6x15
	V		GREASE	12	VASELINE TYPE VARA 5200 OR EQUIVALENT
	V	1	CABLE SHOE	11	TINNED COPPER
	V	1	WASHER	10	STAINL. ST. ø40xø14x2
	V	2	INSULATED WASHER	9	PVC ø40xø14x3
	V	2	NUT	8	STAINLESS STEEL M12
	O	1	GLAND	7	NICKELPLATED BRASS PG16
	V	1	PACKING RING	6	FIBRE ø130xdcd.110xø92x2
	O	6	STUDBOLT w/ NUT	5	STAINL. ST. M8x25
	O	1	ELBOW	4	STEEL 45° – PG16
	O	1	COVER	3	STEEL St.42.2 ø130x12
	O	1	COFFERDAM	2	STEEL St.52.3N
	V	1	REFERENCE ELECTRODE	1	ZINC
ID.Number	Pos.		Item	No.	Material/Concepts

Rev.no.	Date	Description	Drawn	Checked	Appr.	Other appr.
O	03.03.06	ISSUED FOR CONSTRUCTION				

Project:

Dwg. title:
REFERENCE ELECTRODE ARRANGEMENT

MPE Cathodic AS
Flyggø – Norway
www.mpecathodic.no

Scale:

Replaced for:

Replaced by:

Dir.:

File name: 12350DWG.

Dwg. format:

Dwg. no.: C 12350

Code | Sequence no. | Sheet no. | Rev.no.

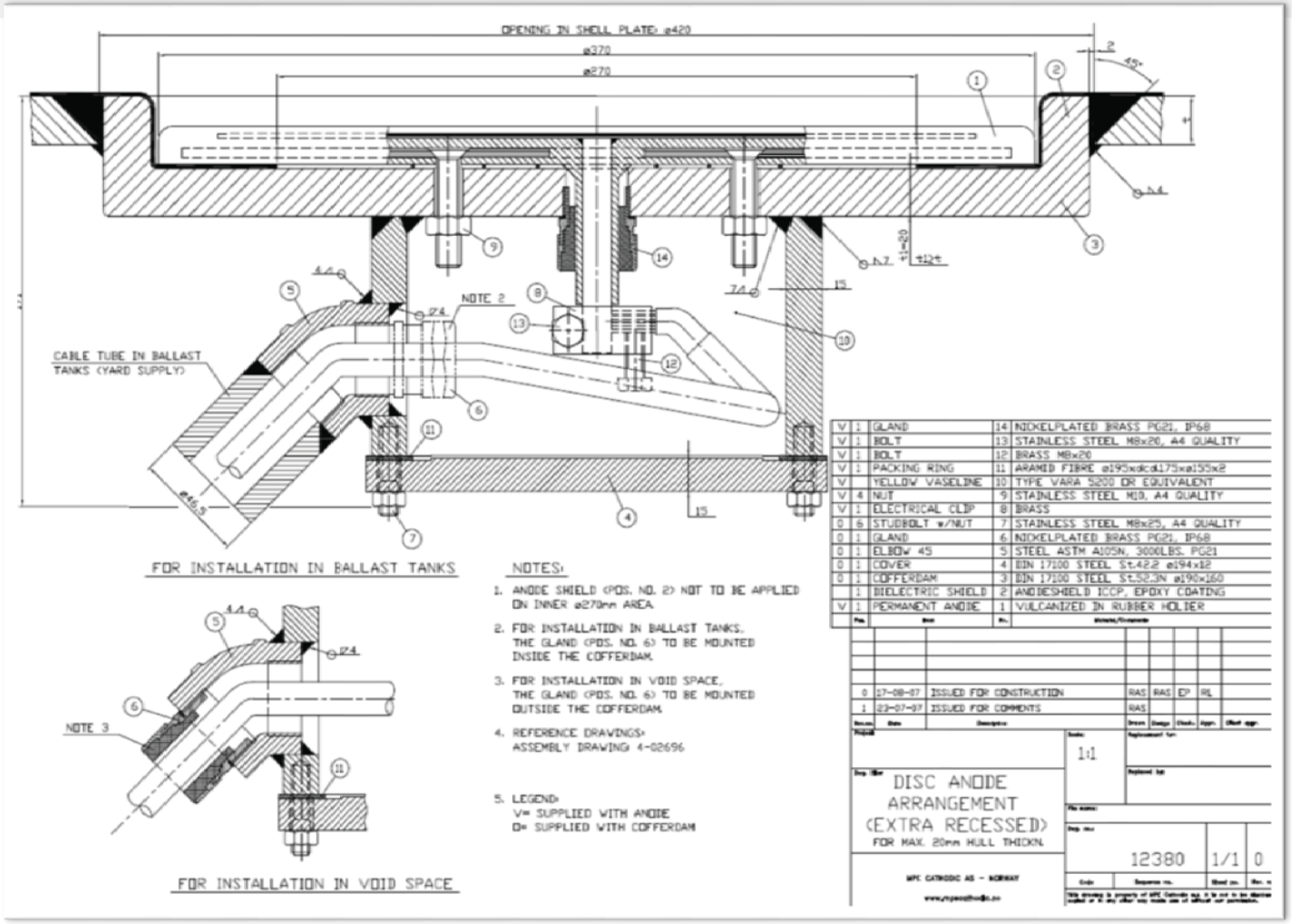
OPENING IN SHELL PLATE: ø420
ø370
ø270
45°
NOTE 2
CABLE TUBE IN BALLAST TANKS (YARD SUPPLY)
FOR INSTALLATION IN BALLAST TANKS
NOTE 3
FOR INSTALLATION IN VOID SPACE
NOTES:
1. ANODE SHIELD (POS. NO. 2) NOT TO BE APPLIED ON INNER ø270mm AREA.
2. FOR INSTALLATION IN BALLAST TANKS, THE GLAND (POS. NO. 6) TO BE MOUNTED INSIDE THE COFFERDAM.
3. FOR INSTALLATION IN VOID SPACE, THE GLAND (POS. NO. 6) TO BE MOUNTED OUTSIDE THE COFFERDAM.
4. REFERENCE DRAWINGS: ASSEMBLY DRAWING 4-02696
5. LEGEND: V= SUPPLIED WITH ANODE O= SUPPLIED WITH COFFERDAM
V 1 GLAND
V 1 BOLT
V 1 BOLT
V 1 PACKING RING
V YELLOW VASELINE
V 4 NUT
V 1 ELECTRICAL CLIP
O 6 STUDBOLT w/NUT
O 1 GLAND
O 1 ELBOW 45
O 1 COVER
O 1 COFFERDAM
1 DIELECTRIC SHIELD
V 1 PERMANENT ANODE
14 NICKELPLATED BRASS PG21, IP68
13 STAINLESS STEEL M8x20, A4 QUALITY
12 BRASS M8x20
11 ARAMID FIBRE ø195xdcd175xø155x2
10 TYPE VARA 5200 OR EQUIVALENT
9 STAINLESS STEEL M10, A4 QUALITY
8 BRASS
7 STAINLESS STEEL M8x25, A4 QUALITY
6 NICKELPLATED BRASS PG21, IP68
5 STEEL ASTM A105N, 3000LBS. PG21
4 DIN 17100 STEEL St.422 ø194x12
3 DIN 17100 STEEL St.52.3N ø190x160
2 ANODESHIELD (COP. EPOXY COATING
1 VULCANIZED IN RUBBER HOLDER
0 27-08-97 ISSUED FOR CONSTRUCTION RAS RAS EP RL
1 23-07-97 ISSUED FOR COMMENTS RAS
1:1
DISC ANODE ARRANGEMENT (EXTRA RECESSED)
FOR MAX. 20mm HULL THICKN.
12380 1/1 0
MPC CATHODIC AS - NORWAY

15.0 HULL COATINGS

15.1 Identification (CI #26 & #27)

15.1.1 Contractor is prepare and recoat 100% of the ship's hull surface from and including the keel strake to the top of the bulwarks on the ship's sides and including the rudder. Total area to be dealt with is approximately 3820 m².

15.2 References

15.2.1 Equipment Data

15.2.1.1 N/A.

15.2.2 Drawings

Drawing Number	Description	Electronic Number
13-0072-01	General Arrangement Profile	
12-0016-02	Shell Expansion (Fore)	
12-0016-01	Shell Expansion (Aft)	

15.2.3 Regulations

15.2.3.1 N/A.

15.2.4 Standards

15.2.4.1 SSPC-SP-7 Standard (Brush Off Blast).

15.2.4.2 SSPC-SP-10 Standard (Near White)

15.5.5 Quality Assurance Standards

15.2.5.1 NACE Inspection. Absolute compliance with manufacturer's preparation and application instructions and restrictions.

15.3 Technical

Preparation

15.3.1 Within four hours of docking, the underwater hull up to the Main Deck level (8.08m above keel) including rudder and rudder trunk are to be cleaned by Hydro-blast (high pressure water blast, 5000 psi minimum) to remove all marine growth, loose material and salt deposition.

15.3.2 All staging, cranage, screens, heaters and other environmental control equipment, lighting and any other support services, equipment and material necessary to perform the tasks set out in this specification shall be supplied by the Contractor.

15.3.3 Suitable storage facilities for the materials and equipment shall be provided close to the work site. These facilities shall be maintained at a temperature recommended by the paint manufacturer as necessary to ensure ease of preparation and application of the paint.

15.3.4 The area to be dealt with is 2700 m². After completion of cleaning the underwater area is to be inspected for loose paint and bare areas.

15.3.5 The above water hull from the waterline to the top of the bulwarks, 1120m² is to be cleaned by high pressure wash to remove all loose rust and peeling coatings.

15.3.6 The entire hull area is then to be inspected by the Chief Engineer and the attending TC Marine Safety Inspector.

15.3.7 Entire hull area as referenced in 15.3.4 is to be abrasive grit blasted using screened slag to sspc-sp-7 standard (Brush Off Blast) to remove all loose material and to provide necessary surface profile to allow for proper bonding of new coating to existing material.

15.3.8 After completion of sweep blast, areas of bare steel shall be abrasive grit blasted to SSPC-SP-10 (Near White) standard. Contractor is to bid upon 810 m² for blasting bare steel to SSPC-SP-10. If oxidation occurs between blasting and application of the coating, the surface must be re-blasted to the specified surface preparation standard. Edges of intact hull coating bordering on bare areas are to be feathered back to a minimum of 15 cm. Surface profile is to have a minimum roughness of 3 mils.

15.3.9 Contractor is to quote a unit cost per square meter for blasting bare steel to near white metal condition for adjustment purposes.

15.3.10 The Contractor shall ensure that no damage, unnecessary cleaning or repairs, result from abrasive blasting and/or the application of coatings. Grit used for blast cleaning shall not be permitted to enter into any part of the vessel. The Contractor is to ensure that each and every opening into the vessel where sand or grit may gain ingress and cause damage shall be suitably protected, including the following:

a) Stern tubes;
b) Sea bays, sea chests;
c) All overboard discharge valves;
d) 3 main engine air intake plenums;
e) Engine room supply & exhaust fans;
f) Tank vents (note - caution to be used on any tanks that are being cleaned and vented during this time);
g) Rudder gland in rudder trunk void.

15.3.11 Measures shall also be taken to ensure that application of coatings does not take place to surfaces or equipment other than those areas specified, and that any inlets or discharges in the shell shall not be blocked by the coating. All deck machinery shall be protected against grit, dust and coatings where necessary.

15.3.12 The Contractor shall plug deck scuppers and discharges or take any measures necessary to prevent water or other liquids from contaminating the areas of plating being coated or prepared for coating.

15.3.13 The following are to be suitably protected against damage during cleaning of the hull, abrasive blasting and application of new coatings. The Contractor will be responsible for repair/replacement of any damaged items at the Contractor's expense to the satisfaction of the Owner's Representative. All hull mounted equipment including:
a) Anodes (6),
b) Reference electrodes (2),
c) Echo sounders (2),
d) Speed log (1),

15.3.14 The area around the four new impressed current anodes, (approx. 3 metre diameter each) is to be blasted to the required Sa 2-1/2. These areas then shall have a stripe coat of Inerta 160 or equivalent applied of 300 microns dft to fair the hull to as near as practicable to the face of the anode. This area is then to be covered as per the rest of the hull as detailed in the specification.

15.3.15 Contractor to renew missing fairing compound in way of port and starboard echo sounder transducer mounts. (Fr. 132, port and starboard) before start of hull painting. Fairing compound to be compatible with existing compound and refinished surface to be made as smooth as possible to minimize surface irregularities. Fairing compound to be completely cured before being painted.

Coating Application – Underwater Hull Area

15.3.16 All bare areas of steel between the keel and the deep load water line are to be coated with one coat of Intershield 163 Inerta 160 Black, 20 mils DFT.

15.3.17 Similarly all bare areas in the bow area, between the deep load water line at frame 170 to the upper edge of the anchor pocket and around the stem to the same position on the opposite side, are to be coated with one coat of Intershield 163 Inerta 160 Red at 20 mils DFT Minimum.

15.3.18 Contractor is to provide at unit cost per square meter for applying one touch up coat of Intershield 163 Inerta 160 at 20 mils DFT minimum.

15.3.19 After application of touch up to bare areas, The entire underwater hull areas referenced in 15.3.16 is to be coated with one full coat of Intershield 163 Inerta 160 Black to achieve 10 mils DFT minimum.

15.3.20 Upon completion of underwater hull full coat, the Contractor is to is to apply a full coat of Intershield 163 Inerta 160 Red from 30cm below the waterline to 70 cm above the waterline to achieve a DFT of 10 mils minimum. Contractor is to apply coating to fair straight line above and below the waterline along the hull's waterline.

15.3.21 Similarly the stem area as detailed in Section 15.3.17 the Contractor is to is to apply a full coat of Intershield 163 Inerta 160 Red to achieve a DFT of 10 mils minimum.

Coating Application Above the Waterline

15.3.22 The contractor is to bid on preparing the area to be repaired to a minimum SSPC-SP-10 by abrasive cleaning. Feather or chip back surrounding area to a sound edge. Ensure that the area is clean and dry prior to application of Interprime 198. Overlap the primer onto existing coatings by approximately 2-3cm.

15.3.23 For bidding purposes quote on 10% of area from the load waterline to the top of the bulwarks, (112 m²). Contractor is to quote on applying two coats of contractor supplied primer to the bare areas. The first coat is to be Interprime CPA 098 Grey, the second being Interprime 099 Red.

15.3.24 A further two coats of Intersheen 579 Acrylic Topcoat (CG Hull Red) is to be applied, the first to coat the primed 112 m² and the second to coat the total area from the load waterline to the top of the bulwarks. Total area 1120 m².

15.3.25 In addition the contractor is to apply one coat of Intersheen White 579 top coat to the following hull markings:
Ship's name P&S, Bow & Stern
Draft and Load lines, P&S
Thruster and Propeller Symbols, P&S
Government Identification Logos, P&S (to use ship supplied stencils)
Note: The contractor is to clean and re-crate the vessel's stencils upon completion of the work. Loss or damage too stencils are solely the responsibility of the Contractor to immediately replace.

15.4 Proof of Performance

15.4.1 Inspections

15.4.1.1 Coast Guard will be retaining the services of an independent consultant to verify that the surface preparation, coating storage, coating preparation and application are as per this specification and the manufacturer's instruction.

15.4.1.2 Payment for the consultant will be directly by Coast Guard outside of this contract.

15.4.1.3 The Contractor is to allow safe and ready access to the consultant to all areas of work under this specification including storage, and mixing areas as the consultant

deems necessary for the purpose of verifying that the surface preparation and coating storage, preparation, and application are as per the specification.

15.4.1.4 NACE Inspector will be required to inspect the all components for surface preparation and for each of the applications of the coating system including environmental conditions, equipment, mixing and application processes. It is the contractors responsibility to arrange for the NACE inspector to be present at the required times to inspect the preparation and applications. Coating at each stage will also be to the satisfaction of the chief engineer or designate.

15.4.1.5 After completion of cleaning the underwater area is to be inspected for loose paint and bare areas.

15.4.1.6 After completion of Hydro-blast entire hull area is to be inspected by the Chief Engineer, NACE Inspector and the attending TC Marine Safety Inspector.

15.4.1.7 After completion of sweep blast and prior to blasting of bare metal areas, Contractor Representative, Chief Engineer or his delegate and NACE Inspector will inspect the vessel's hull to determine actual bare areas of the hull for appropriate adjustment of the bid price.

15.4.2 Testing/Trials

15.4.2.1 As per NACE Inspectors requirements, as a minimum, before any surface preparation activities, after surface preparation, before coating begins, and between each application of coating, after all application is completed for defect detection and after any defects are corrected.

15.4.3 Certification

15.4.3.1 Contractor is to arrange TCMS inspection of underwater hull and ensure sign offs are completed. Copies are to be delivered to Chief Engineer and Technical Authority after completion.

15.5 Deliverables

15.5.1 Documentation (Reports/Drawings/Manuals)

15.5.1.1 Details about the documentation requirements go here – specify all of the details for the drawings, documentations, paper and electronic copies and how many.

15.5.2 Spares

15.5.2.1 N/A.

15.5.3 Training

15.5.3.1 N/A.

16.0 ASBESTOS REMOVAL AND RE-INSULATION

16.1 Identification (CI #39)

16.1.1 This specification covers work to be completed onboard the CCGS "Henry Larsen", to remove Asbestos Containing Material (ACM) present in a spray coat product known as 'Weathershield'. 'Weathershield' was installed as a means of binding the surface of the sprayed on insulation that was used throughout the vessel. Although the 'Weathershield' product has been applied to the surfaces of most bulkhead and deckhead insulation, only the accommodation areas shown on the accompanying insulation guidance drawing, J13069-A01, are the areas where it requires removal prior to the new insulation being fitted.

16.1.2 It should be noted that in order to remove the 'Weathershield' at the areas shown, the sprayed- on insulation that it covers must also be removed. The areas designated for removal are highlighted in the Outfit section of this specification detailing the strip-out requirements.

16.1.3 At the areas designated for removal, there are occurrences of overspray, where the 'Weathershield' has adhered to cable trays, wire ways and ventilation ductwork etc. There is a realization that not all of this overspray is able to be removed, but in instances where this overspray is either loose, poorly adhered, or flaking off, and thus posing an environmental and/or health hazard, the overspray at these locations is to be scraped off and removed.

16.1.4 During the course of other refit work items, the Contractor will encounter the 'Weathershield' product throughout the vessel. Any 'Weathershield' in way of equipment, systems and associated components etc. shall be removed/remediated and replaced with new insulation (fire, thermal, or both). This specification, including guidance drawing J13069-A01, covers the replacement of the stripped-out insulation in accommodation areas with new thermal and A-60 rated fire insulation, and does not address the remediation work that will be required in way of the other refit work items.

16.1.5 Along with the guidance drawing noted above, identifying the areas of asbestos containing material requiring remediation, also accompanying this specification as an Appendix E document is a "Work Breakdown Table" listing the spaces, and the boundaries within each space, which require remediation. The table identifies typical interference items which are likely to be encountered, estimates the area of insulation to be remediated and replaced, and identifies the type of insulation to be installed. The interference items listed in this table are indicative of the items that will be encountered at each boundary location, but do not fully define the number and extent of these items. In some cases the interference items can be worked around, while in other cases the interference item shall require removal and reinstallation. During the Bidder's viewing the Contractor shall determine for themselves which items can be worked around and which require temporary removal to gain adequate access.

16.2 References

16.2.1 Equipment Data

16.2.1.1 Roxul Insulation, Transport Canada Approvals Certificate, and Installation Instructions.

16.2.2 Drawings

Drawing Number	**Description**	**Electronic Number**
J13069-A01	Asbestos Removal Program – Deckheads	J13069-A01_R0
	and Bulkheads	

16.2.3 Regulations

16.2.3.1 Canada Labour Code, Occupational Health and Safety Regulations, Subsection 124; Duties of Employer. Part X; Hazardous Substances. May 1999.

16.2.3.2 Marine Occupational Safety and Health Regulations.

16.2.3.3 Provincial Occupational Safety and Health Regulations.

16.2.3.4 Canada Shipping Act, Hull Construction Regulations, Part X.

16.2.4 Standards

16.2.4.1 CCG Asbestos Management Plan.

16.2.4.2 CCG Fleet Safety Manual, Section 7.0; Development of Plans for Shipboard Operations. Subsection 7.F.8: Controlling Asbestos-containing Materials.

16.2.4.3 Health Canada, Occupational Health Assessment Guide, Appendix 2: Hazardous Exposure. January 2002.

16.2.4.4 Transport Canada Publication TP11469, Guide to Structural Fire Protection.

16.2.4.5 Transport Canada Publication TP14612, Procedures for Approval of Life Saving Appliances and Fire Safety Systems, Equipment and Products.

16.2.4.6 Transport Canada Publication TP15211, Canadian Supplement to the SOLAS Convention.

16.2.4.7 Transport Canada Approved Products Catalogue Index.

16.2.4.8 IMO FTP Code – International Code for Application of Fire Test Procedures.

Note: In case of conflict between any of the standards, then the most stringent requirements will prevail.

16.2.5 Quality Assurance Standards

16.2.5.1 ISO 9001:2008 or equivalent.

16.3 Technical

16.3.1 Strip-Out Requirements (Deckhead Insulation)

16.3.1.1 The existing insulation and 'Weathershield' spray coat product shall be removed from the underside of the deckhead over at the following decks, as per the layout shown on the guidance drawing, J13069-A01.

16.3.1.2 Deckhead insulation shall be stripped out completely to the bulkhead sides of the spaces, and to the side shell plating for Main Deck spaces. Deckhead insulation that is extended down the bulkhead, shall also be stripped out (ie. insulation that is extended for frost line or fire boundary protection). In cases where the bulkhead is fully insulated and it is intended for this insulation to remain (in all cases for sideshell insulation encountered on the Main Deck), the insulation shall only be removed on the bulkhead or sideshell to the depth needed to accommodate the new deckhead insulation.

16.3.1.3 **Navigation Bridge Deck and Wheelhouse**

Thermal insulation at underside of Wheelhouse Top and Navigation Bridge Deck Top.

A-60 fire insulation at underside of forward end of funnel, approx. frame 100 – 105.

16.3.1.4 **Officer's Deck**

A-60 fire insulation at underside of deck over in way of Wheelhouse and designated Control Spaces above.
Thermal insulation at underside of deck over in way of exposed areas of Navigation Bridge Deck above.

16.3.1.5 **Flight and Boat Deck**

Thermal insulation at perimeter of deck above, for 600mm all the way around.

16.3.1.6 **Upper Deck**

Thermal insulation at deckhead of accommodation spaces at the underside of Flight and Boat Deck over, at locations as shown on the guidance drawing, J13069-A01.

Compartment Nos. 260, 262, 266 and 277 have already had the deckhead insulation and 'Weathershield' asbestos spray-on coating remediated and the deckhead at these spaces has been reinsulated. There is an outstanding question with respect to the remediation work that was carried out in the water closets in those four compartments (Compt Nos. 261, 263, and 267), and the Contractor is asked to verify the status of the deckhead areas of these water closets, and report back to the Technical Authority with his findings.

A-60 rated fire insulation at deckhead of accommodation spaces at the underside of Flight Deck above, as outlined on the guidance drawing, J13069-A01.

16.3.1.7 **Main Deck**

Thermal insulation at deckhead of accommodation spaces at underside of Upper Deck over, as outlined on the guidance drawing, J13069-A01.

16.3.2 Strip-Out Requirements (Bulkhead Insulation)

The existing fire and thermal insulation and 'Weathershield' spray coat product currently fitted to the bulkheads throughout the Navigation Bridge Deck and the Wheelhouse shall be removed from the vessel. The insulation and 'Weathershield' shall be removed in its entirety. This will necessitate temporary removal of the joiner bulkheads, linings, and outfit items throughout these areas, see also Section 16.3.3.

16.3.2.1 Strip-Out Requirements (General)

All joiner bulkheads and joiner linings at the Navigation Bridge Deck and Wheelhouse areas shall be removed and temporarily stored while the insulation removal/remediation process is underway. Removal of the top support channels will be necessary in order to remove the joiner linings. The removal of the joiner linings will include disconnection of imbedded receptacles and switches.

16.3.2.2 Strip-Out Requirements (Abatement Procedures)

The Contractor shall ensure that safe and compliant abatement procedures are employed with respect to personnel protection, isolation/quarantining, and waste handling. Such procedures are intended to safeguard the Contractor's personnel as well as CCG personnel and other contractors. The procedures shall also safeguard the public and the environment. The Contractor shall develop an abatement plan describing the above procedures and demonstrating compliance with the Newfoundland Provincial Occupational Safety and Health Regulations, the CCG Asbestos Management Plan, and the CCG Fleet Safety Manual; and this plan shall be submitted to CCG prior to commencement of any abatement work.

It is considered that the strip-out of the necessary ceiling panels and linings to allow access to the existing insulation and asbestos spray coat, followed by quarantining of the area by an abatement team prior to strip out of the offending materials, shall best be carried out on a deck by deck basis.

Regarding the sequence in which the strip out and abatement work is conducted, certain outfit items and interference items will need to be removed by an abatement team rather than a typical shipyard team that is not trained or equipped to deal with the ACM hazard. The Contractor shall determine the extent of items that can be safely removed prior to the deployment of an abatement team and the associated quarantining of spaces.

16.3.3 New Insulation (General)

16.3.3.1 **Deckhead Insulation**

The new insulation to be fitted at the underside of the decks of the vessel, at the same locations where the existing insulation has been stripped out, shall be either thermal or fire insulation or a combination of both, depending on the location.

The new deckhead thermal insulation shall be a minimum of 100mm thick (50mm over stiffeners) complete with a foil vapour barrier, and shall be formed of two separate layers, each 50mm thick, and installed such that the joints are staggered. The insulation shall be Rockwool Searox SL720 Barrier or equal, with a density of 32kg per cubic meter. The insulation shall have a valid Transport Canada Marine Safety certificate. The thermal insulation shall extend a minimum of 460mm beyond weather exposed boundaries.

The new A-60 fire insulation at the deckhead locations shall be a minimum of 50mm thick (38mm over stiffeners) complete with a foil vapour barrier. The insulation shall be Roxul RHM 60A or 60AC or equal, with a density of 96kg per cubic meter. The insulation shall have a valid Transport Canada Marine Safety certificate. The fire insulation shall extend a minimum of 380mm beyond deck and bulkhead boundaries.

At deckhead locations where fire insulation is required, but there is also a need for adequate thermal protection, there shall be two layers of 50mm thick Roxul RHM 60A or 60AC or equivalent fire insulation fitted. The two layers shall be installed such the joints are staggered. In cases of fire and thermal insulation being required, the insulation shall extend a minimum of 460mm beyond deck and bulkhead boundaries.

New deckhead insulation shall be run completely to the bulkhead sides of the spaces, and to the side shell plating for Main Deck spaces. New deckhead insulation shall be installed to extend down the bulkhead by 380mm or 460mm as noted on the guidance drawing. In cases where the bulkhead insulation is to remain (in all cases for sideshell insulation), the extension of the new insulation is not required.

At the undersides of the decks, following the installation of the new insulation, the Contractor shall apply a 50mm wide line of red spray paint to effectively highlight the boundary between new and existing insulation. This is to serve as a ready indicator for ship's crew and Contractors, to augment the vessel's asbestos management plan.

The areas of new deckhead thermal and fire insulation are listed below. For additional information, the Contractor shall consult the guidance drawing, J13069-A01.

16.3.3.2 **Navigation Bridge Deck and Wheelhouse**

New thermal insulation at underside of Wheelhouse Top and Navigation Bridge Deck Top in way of cabins and spaces under.

New A-60 fire insulation at underside of funnel, approx. frame 100 – 105.

16.3.3.3 **Officer's Deck**

New A-60 fire insulation to be fitted at underside of deck over in way of Wheelhouse and designated Control Spaces above.

New thermal insulation at underside of deck over in way of exposed areas of Navigation Bridge Deck above.

16.3.3.4 **Flight and Boat Deck**

New thermal insulation at perimeter of deck above, for 600mm inboard of edge all the way around.

16.3.3.5 **Upper Deck**

New thermal insulation at deckhead of accommodation spaces at the underside of Flight and Boat Deck over, at locations as shown on the guidance drawing, J13069-A01.

New thermal and A-60 fire insulation at deckhead of accommodation spaces at the underside of Flight Deck above, approx. frames 28-65, as outlined on the guidance drawing, J13069-A01.

16.3.3.6 **Main Deck**

New thermal insulation at deckhead of accommodation spaces at underside of Upper Deck over, as outlined on the guidance drawing, J13069-A01. The extent of the insulation is highlighted definitively on the guidance drawing.

In all cases, the insulation shall be secured by means of metal pins and speed clips on maximum 305mm centers, and in accordance with manufacturer's recommendations..

16.3.4 **Bulkhead Insulation (Thermal)**

The bulkheads throughout the perimeter of the Navigation Bridge Deck and the Wheelhouse are the only instances of bulkhead insulation on the vessel to be considered for removal and remediation (with the exception of deckhead insulation that has been extended down the bulkhead for frost line or fire protection). This is required due to the ongoing need for items of

equipment to removed and/or attached to the bulkheads at these locations, and thus the greater likelihood of disturbing the original insulation and 'Weathershield' asbestos spray-on coating.

The new bulkhead thermal insulation shall be a minimum of 100mm thick (50mm over stiffeners) complete with a foil vapour barrier, and shall be formed of two separate layers, each 50mm thick, and installed such that the joints are staggered. The insulation shall be Rockwool Searox SL720 Barrier or equal, with a density of 32kg per cubic meter. The insulation shall have a valid Transport Canada Marine Safety certificate. The thermal insulation shall extend a minimum of 460mm beyond weather exposed boundaries. The guidance drawing, J13069-A01 shows the extent of the thermal insulation required.

The insulation shall be installed as per the recommendations and/or guidelines as listed on the TCMS approval certificate for the insulation.

In all cases, the insulation shall be secured by means of metal pins and speed clips on maximum305mm centers, and in accordance with manufacturer's recommendations.

16.3.4.1 **Bulkhead Insulation (Fire)**

The guidance drawing also highlights the locations where bulkhead fire insulation at the Navigation Bridge Deck and Wheelhouse Deck is required. The interior compartment bulkheads at the Navigation Bridge Deck as well as a section of the aft bulkhead in the Wheelhouse are the areas requiring fire insulation. The new A-60 fire insulation to be installed at these locations shall be a minimum of 75mm thick (38mm over stiffeners) complete with a foil vapour barrier. The insulation shall be Roxul RHM 60A or 60AC or equal, with a density of 96kg per cubic meter. The insulation shall have a valid Transport Canada Marine Safety certificate. The fire insulation shall extend a minimum of 380mm beyond deck and bulkhead boundaries.

The insulation shall be installed as per the recommendations and/or guidelines as listed on the TCMS approval certificate for the insulation.

In all cases, the insulation shall be secured by means of metal pins and speed clips on maximum 305mm centers, and in accordance with manufacturer's recommendations.

16.3.5 Re-installation of Interference Items, Ceiling Panels, and Outfit Items

16.3.5.1 Following the re-insulation of the remediated deckhead spaces, the deckhead interference items, ceiling panels and all other items of outfit temporarily removed to allow the work to proceed shall require reinstallation. Any outfit items accidentally damaged during the remediation process shall require replacing. Painting and cleaning shall be undertaken to bring the space back to its pre-refit condition.

16.3.5.2 The topsides of the ceiling panels that have been exposed to the previously installed insulation and 'Weathershield' asbestos containing spray-on coating, shall be thoroughly cleaned of any insulation/coating pieces or other contaminated residue before they are reinstalled on the vessel.

16.3.6 Re-installation of Interference Items, Bulkhead Panels, and Outfit Items

16.3.6.1 Following the re-insulation of the exterior bulkheads in the Wheelhouse, and the interior bulkheads at the Navigation Bridge Deck level, the bulkhead interference items, bulkhead lining panels, and all other items of outfit temporarily removed to allow the work to proceed shall require reinstallation. Any outfit items accidentally damaged during the remediation process shall require replacing. Painting and cleaning shall be undertaken to bring the space back to its pre-refit condition.

16.3.6.2 The back sides of the joiner bulkhead panels and linings, where they had been exposed to the previously installed insulation and 'Weathershield' asbestos spray-on coating shall be thoroughly cleaned of any insulation/coating pieces or other contaminated residue before they are reinstalled on the vessel. Care shall be taken to ensure that the foil vapour barrier of the new insulation is not damaged or otherwise pierced during re-installation of the bulkhead joiner panels and linings.

16.4 Proof of Performance

16.4.1 Inspections

16.4.1.1 The work shall be carried out to the satisfaction of the Chief Engineer and/or the Technical Authority Representative.

16.4.1.2 Inspections shall be carried out by the Chief Engineer and/or the Technical Authority Representative. The representative shall conduct a final inspection to determine acceptance of the work. The work shall also be inspected by the Contractor to ensure the methods of installation and workmanship conform to the drawings and specification.

16.4.1.3 Any defects noted by the Contractor shall be brought to the attention of the Chief Engineer and/or the Technical Authority Representative, and shall be rectified, re-inspected and certified correct before the project is signed off as being completed.

16.4.2 Testing/Trials

16.4.2.1 Any systems or equipment that it was found necessary to disconnect and/or temporarily remove while the asbestos remediation work was being carried out shall be tested and undergo all applicable trials once they have been re-connected, to ensure they are operating and functioning correctly.

16.4.3 Certification

16.4.3.1 All insulation as installed shall be supplied with valid Transport Canada Marine Safety approved certificates.

16.5 Deliverables

16.5.1 Documentation (reports/Drawings/Manuals)

16.5.1.1 Contractor's Project Abatement Plan.

16.5.2 Spares

16.5.2.1 Not applicable

16.5.3 Training

16.5.3.1 Not applicable

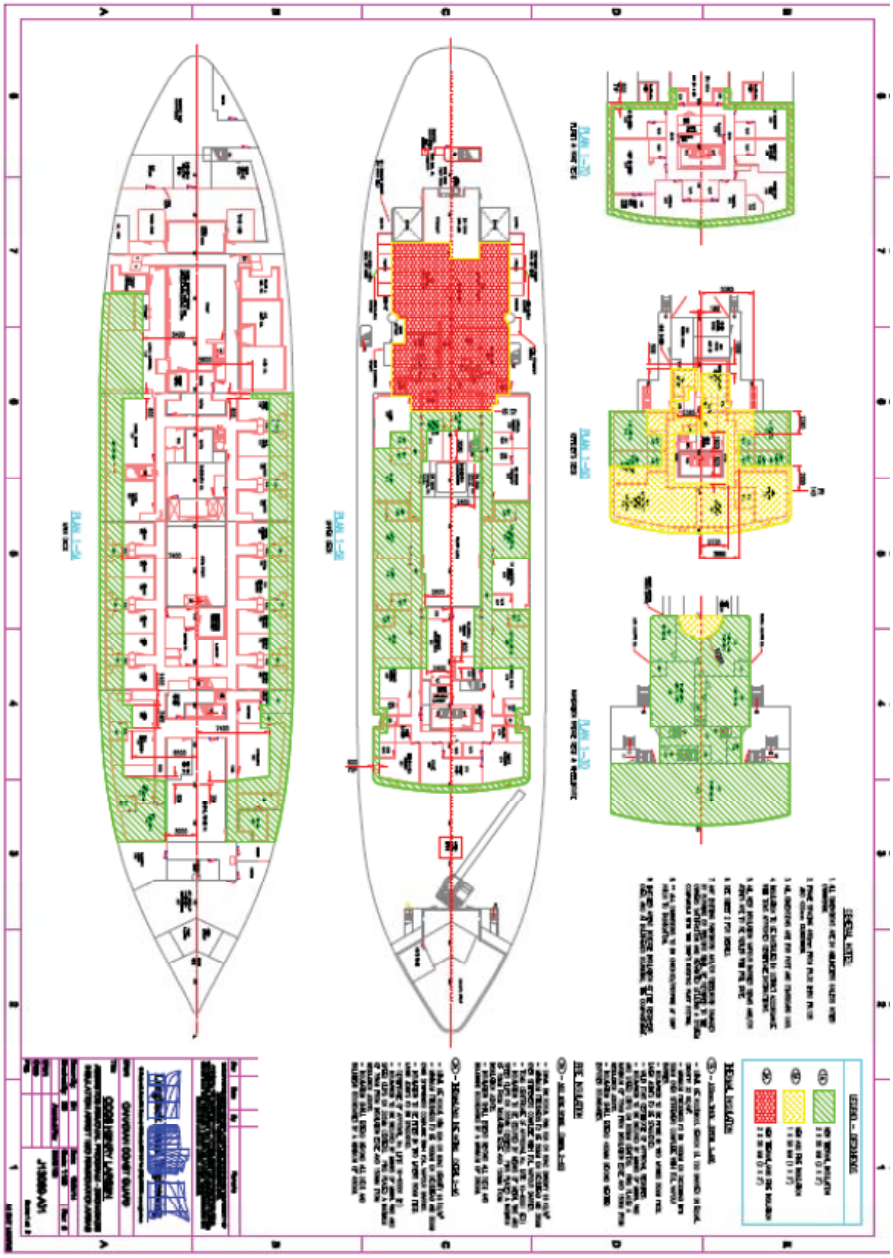

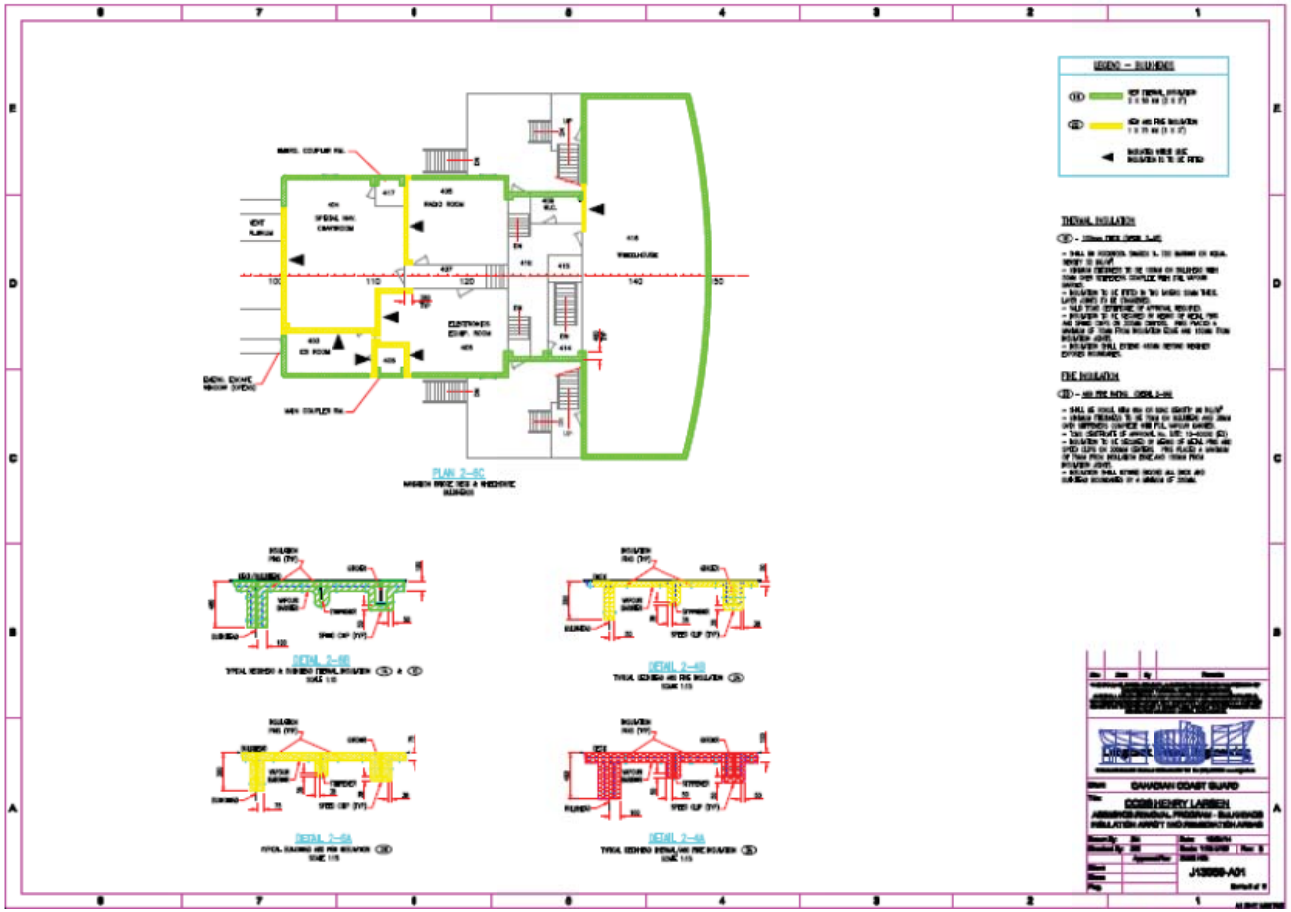
LEGEND – BUILDING
THERMAL INSULATION
FIRE INSULATION
PLAN 2-6C
DETAIL 2-6B
DETAIL 2-6D
DETAIL 2-6A
DETAIL 2-6E
CANADIAN COAST GUARD
COSS HENRY LARSEN
J13009-A01

17.0 GENERAL PIPING SYSTEM REPLACEMENT

17.1 Identification (CI #'s 3, 20, & 30)

The aim of this section is to replace those sections of piping, on the following systems, identified as failing to meet the minimum wall thickness requirement:

- Bilge and Ballast (BB);
- Firemain (FM);
- Black Water (BW);
- Grey Water (GW); and
- Vents and Soundings (VS).

17.2 References

17.2.1 Equipment Data

17.2.1.1 Not Applicable.

17.2.2 Drawings

Drawing Number	Description	Electronic Number
22-0709-01	Bilge and Ballast Diagram	
22-0711-01	Fire and Washdeck Diagram	
22-0706-01	Sewage Diagram (Black water)	
22-0708-01	Interior Deck Scuppers and Drains and Grey Water System Diagram	
22-0733-01	Vents and soundings	
22-0733-02	Vents and Soundings	

17.2.3 Regulations

17.2.3.1 Canada Shipping Act, 2001.

17.2.3.2 Marine Machinery Regulations.

17.2.3.3 Hull Construction Regulation.

17.2.3.4 Hull Inspection Regulations.

17.2.3.5 Artic Shipping Pollution Prevention Regulations.

17.2.4 Standards

17.2.4.1 Lloyd's Register Rules and Regulations for Steel Ships.

17.2.4.2 International Association of Classification Societies Requirements Concerning Pipes and Pressure Vessels.

17.2.4.3 Threaded pipe to be in accordance with Lloyd's Register standard Rules and Regulations for Steel Ships, Chapter 12. Section 2.3 sub part 2.3.1, 2.5, 12.2.1, 2.10, table 12.2.6, 2.11, for piping design requirements.

17.2.4.4 PVC pipe and fittings to meet Lloyd's Register Rules and Regulations for Steel Ships, Chapter 12. Section 5.0, sub 5.1, 5.2 and 5.3, for piping design requirements.

17.2.4.5 The Contractor shall follow the general notes of Diagram's and Drawings.

17.2.4.6 All pipe welding to be to a standard acceptable to, and approved by Transport Canada, and appropriate to the application.

17.2.4.7 All steel pipe to be in accordance with ASTM A.53.

17.2.5 Quality Assurance Standards

17.2.5.1 The work shall be done complete in accordance with the Contractor's internal, approved, quality assurance standards and practices.

17.2.5.2 The work shall be completed to a standard acceptable to the Technical Inspector and the Owner's Representative.

17.3 Technical

17.3.1 General

17.3.1.1 Good pipe fitting practice shall be used when replacing pipe.

17.3.1.2 Before proceeding with any work, care and protection will be done to protect the surrounding area, fire proofing, covering of electrical for dust, tents for dust control to prevent damage and rework of surrounding area.

17.3.1.3 All systems shall be locked out and tagged out electrically and mechanically as required by systems engineer.

17.3.1.4 Open ended piping to be closed when not working for care and protection and prevention of foreign matter introduced into piping systems.

17.3.1.5 The Contractor shall take measurements of all dimensions and radii of all pipe/fitting being replaced, prior to removal.

17.3.1.5 All pipe hangers removed during pipe replacement shall be replaced back to original.

17.3.1.6 All paint in way of welding work shall be removed to base material to ensure quality welds and fit up, and on PVC pipe to allow correct adhesion of PVC cement.

17.3.1.7 All steel pipe bending shall be five diameters (5D) as a minimum. Pre-cast Victualic Piping bends may be 3D if the existing pipe section has a 3D bend.

17.3.1.8 No thread tape is to be used on threaded pipe, liquid Teflon thread sealant, such as Loctite 567 or equal is to be used.

17.3.1.9 All Victaulic piping and fittings shall be installed according to Victaulic hand book 1-100. Lubrication of Victaulic gaskets to be in accordance with applicable Canadian standards.

17.3.1.10 All piping to be restored to original condition and paint coatings as specified by 30-000-000-ES-TE-001-Colour Coding Standard for Piping Systems. The selected paint coatings shall be designed for the specific application, such as tanks, bilges or living spaces.

17.3.2 Pipe Replacement

17.3.2.1 The Contractor shall replace all pipe sections and fittings identified in Sections 17.3.3 – 17.3.7. Where available photographs of the exact section of pipe to be replaced are provided in Section 17.6.

17.3.2.2 All pipes adjacent to the sections being replaced shall be visually inspected internally, and where extensive erosion/corrosion is seen, wall thickness measurements shall be taken. If the wall thickness is below the minimum allowable wall thickness, that section of pipe shall also be replaced. Minimum thickness in accordance with Table 3 of IACS Requirements concerning Pipes and Pressure Vessels. For costing purposes, the Contractor shall assume a total of [120] UT readings.

17.3.2.3 The ends of the adjacent Victaulic fittings shall be inspected for corrosion, to determine if the connection is reusable. If the pipe/fitting is not reusable, it shall be removed and replaced with a new identical pipe/fitting.

17.3.2.4 New Victaulic bolts, nuts and gaskets shall be used upon reinstallation.

17.3.2.5 Through-deck/bulkhead penetrations shall have dimensions detailed in *Table 1*~~*Table 1*~~.

Table 1: Deck Penetration Dimensions

Nominal Pipe Size	OD (inches)	ID (inches)	Wall Thickness (inches)	Length (inches)
2 inch/50mm	3.125	2.500	0.313	3.25
3 inch/75mm	4.000	3.563	0.219	3.25
4 inch/100mm	5.250	4.625	0.313	3.25
5 inch/125mm	6.625	5.625	0.500	3.25
6 inch/150mm	7.750	6.750	0.500	3.25
8 inch/200mm	10.000	8.750	0.630	3.25
10 inch/350mm	11.750	10.938	0.406	3.25

17.3.2.6 Penetrations up to 1½" may be sil-brazed with bag cup 5 or welded. All penetrations 2" and greater shall be welded. A $^{1}/_{8}$" vent hole will be needed for venting and welded after both ends of penetration are seal welded.

17.3.3 Bilge and Ballast System

17.3.3.1 The Contractor shall replace the following BB sections of pipe, identified on 22-0709-01 Bilge and Ballast Diagram, and in *Table 2*~~*Table 2*~~:

Table 2: Bilge and Ballast

Reading #	Location	Pipe Spool	OD (mm)	Type	Length (mm)	Photo
1	AMR – starboard of door to PMR	044-BB-075	75	Victaulic	1000	BB1
60	MGR – vertical section of No.2 Void Stbd bilge suction	035-BB-075	75	Victaulic	1000	BB2
61	MGR - vertical section of No.3 Void Stbd bilge suction	033-BB-075	75	Victaulic	1000	BB2
68	No.1 Void Tank Pt	018-BB-125	125	Welded	3000	BB3
69	No.1 Void Tank Pt	056-BB-125	125	Welded	5000	BB4

17.3.3.2 For costing purposes the Contractor shall assume the lengths of each individual section of pipe is in accordance with the diameter, length, and type specified in ~~Table 2Table 2~~. Where the actual length deviates from this value, 1379 Action shall be initiated to account for the difference.

Formatted: Font: 12 pt, Not Italic

17.3.3.3 The Contractor shall provide, for costing of emergent work only, the cost per unit, split between labour and materials, of replacing additional sections of pipe and fittings, and making good the repair. For the purposes of these costs, a unit shall be considered as:

- A one (1) metre section of straight Victaulic pipe plus couplings and seals, for pipe OD from 50mm to 150mm in 25 mm steps;
- A one (1) metre section of straight welded pipe including flanges, for pipe OD from 50mm to 150mm, in 25 mm steps;
- One (1) Victaulic T-Piece 125 mm OD with couplings and seals;
- One (1) Victaulic 90 degree 125 mm OD fitting with couplings and seals;

17.3.3.4 All emergent work shall be initiated using 1379 Action.

17.3.4 Firemain System

17.3.4.1 The Contractor shall replace the following FM sections of pipe, identified on 22-0711-01 Fire and Washdeck Diagram, and in *Table 3*~~*Table 3*~~:

Table 3: Firemain

Reading #	Location	Pipe Spool	OD (mm)	Type	Length (mm)	Photo
7	PMR -lower reducer (behind door stbd)	024-FM-050	50	Victaulic	2500	FM1
34	AMR – on Constant pressure system, after valve FM-039-40	049-FM-040	40	Threaded	200	FM2
35	AMR – from Constant pressure tank	047-FM-040	40	Threaded	200	FM2
39	Fo'c'sle – Fire Station 21	031-FM-65	65	Welded	1000	FM3
40	Fo'c'sle - -Fire Station 20	030-FM-65	65	Welded	1000	FM4
56	Main Deck – Fire Station 7	038-FM-65	65	Victaulic	45deg	FM5
76	AMR – Vertical Pipe from Bilge /Ballast Pump	085-FM-100	100	Victaulic	4000	FM6

17.3.4.2 After applicable testing of the Firemain on the Fo'c'sle, heat tape and thermal insulation with protective stainless steel covering shall be reapplied and Heat tape tested for proper operation. All insulation is to be painted in a suitable weatherproof coating, and sealed weathertight at the deck with a suitable non-drying sealant.

17.3.4.3 For costing purposes the Contractor shall assume the lengths of each individual section of pipe is in accordance with the diameter, length, and type specified in *Table 3*~~*Table 3*~~. Where the actual length deviates from this value, 1379 Action shall be initiated to account for the difference.

17.3.4.4 The Contractor shall provide, for costing of emergent work only, the cost per unit, split between labour and materials, of replacing additional sections of pipe and fittings, and making good the repair. For the purposes of these costs, a unit shall be considered as:

- A one (1) metre section of straight Victaulic pipe plus couplings and seals, for pipe OD from 50mm to 150mm in 25 mm steps;
- A one (1) metre section of straight welded pipe including flanges, for pipe OD from 50mm to 150mm, in 25 mm steps;
- One (1) Victaulic T-Piece 125 mm OD with couplings and seals;
- One (1) Victaulic 90 degree 125 mm OD fitting with couplings and seals;

17.3.4.5 All emergent work shall be initiated using 1379 Action.

17.3.5 Black Water System

17.3.5.1 The Contractor shall replace the following BW sections of pipe, identified on 22-0706-01 Sewage Diagram, and in *Table 4*~~*Table 4*~~:

Table 4: Black Water

Reading #	Location	Pipe Spool	OD (mm)	Type	Length (mm)	Photo
13	Room 133 – Starboard, Stewards cabin above vanity	N/A	50	Welded	1000	BW1

17.3.5.2 The Black Water system to be cleaned and chlorinated to gas free standards before opening of system.

17.3.5.3 For costing purposes the Contractor shall assume the lengths of each individual section of pipe is in accordance with the diameter, length, and type specified in *Table 4*~~*Table 4*~~. Where the actual length deviates from this value, 1379 Action shall be initiated to account for the difference.

17.3.5.4 The Contractor shall provide, for costing of emergent work only, the cost per unit, split between labour and materials, of replacing additional sections of pipe and fittings, and making good the repair. For the purposes of these costs, a unit shall be considered as:

- A one (1) metre section of straight Victaulic pipe plus couplings and seals, for pipe OD from 50mm to 150mm in 25 mm steps;

- A one (1) metre section of straight welded pipe including flanges, for pipe OD from 50mm to 150mm, in 25 mm steps;
- One (1) Victaulic T-Piece 125 mm OD with couplings and seals;
- One (1) Victaulic 90 degree 125 mm OD fitting with couplings and seals;

17.3.5.5 All emergent work shall be initiated using 1379 Action.

17.3.6 Grey Water System

17.3.6.1 The Contractor shall replace the following GW sections of pipe, identified on 22-0708-01 Interior Deck Scuppers and Drains and Grey Water System Diagram, and in *Table 5*~~*Table 5*~~:

Table 5: Grey Water

Reading #	Location	Pipe Spool	OD (mm)	Type	Length (mm)	Photo
64	PMR – 1.5" at Y-piece, going forward from Galley Deck Drain	N/A	75	Welded	1000	GW1

17.3.6.2 For costing purposes the Contractor shall assume the lengths of each individual section of pipe is in accordance with the diameter, length, and type specified in *Table 5*~~*Table 5*~~. Where the actual length deviates from this value, 1379 Action shall be initiated to account for the difference.

17.3.6.3 The Contractor shall provide, for costing of emergent work only, the cost per unit, split between labour and materials, of replacing additional sections of pipe and fittings, and making good the repair. For the purposes of these costs, a unit shall be considered as:

- A one (1) metre section of straight Victaulic pipe plus couplings and seals, for pipe OD from 50mm to 150mm in 25 mm steps;
- A one (1) metre section of straight welded pipe including flanges, for pipe OD from 50mm to 150mm, in 25 mm steps;
- One (1) Victaulic T-Piece 125 mm OD with couplings and seals;
- One (1) Victaulic 90 degree 125 mm OD fitting with couplings and seals;

17.3.6.4 All emergent work shall be initiated using 1379 Action.

17.3.7 Vents and Sounding System

17.3.7.1 The Contractor shall replace the following VS sections of pipe, identified on 22-0733-01 and 22-0733-02 Vents and Soundings Diagram, and in *Table 6*~~*Table 6*~~:

Table 6: Vents and Soundings

Reading #	Reading Location	Tank	OD (mm)	Type	Length (mm)	Type
6	Upperdeck	No.8 F.O. Tank Fr 150-165 Port	125	Welded	22000	Vent
7	Upperdeck	No.8 F.O. Tank Fr 150-165 Stbd	125	Welded	2000	Vent
16	Upperdeck	No 6 FO Tank Fr 89-120 Port Fwd	100	Welded	2000	Vent
23	Upperdeck	Waste Oil Tank	65	Welded	2000	Vent
31	Upperdeck	Cofferdam F.W. Tank	65	Welded	2000	Vent
45	MGR	Fuel Oil Drain Tank	40	Welded	5500	Sounding
46	MGR	Fuel Oil Overflow Tank	40	Welded	5500	Sounding
50	MGR	Oily Bilge Retention Tank	40	Welded	5500	Sounding
52	PMR	No 2 Fuel Oil Tank Fr30-61 Stbd	40	Welded	5500	Sounding
53	In Tank	No 1 Void Tank Fr 18-30 Port	40	Welded	7000	Sounding
55	In Tank	No 1 Void Tank Fr 18-30 Stbd	40	Welded	7000	Sounding
57	MGR	Purifier Sludge Tank Fuel Oil Port	40	Welded	2000	Sounding
65	Upperdeck	Generator Cooling Water Tank CL	50	Welded	2000	Sounding
66	Upperdeck	Lube Oil Sludge Tank	50	Welded	2000	Vent

17.3.7.2 All Upperdeck UT readings were taken within 3” of the deck penetration. Identified Upper Deck vent lines are to be replaced from the deck penetration to the vent cap.

17.3.7.3 All sounding tube UT readings were taken as close to the Tank Top or deck penetration as possible. Identified sounding tubes terminating in the machinery space are to be completely replaced, from striker plate to valve. Sounding tubes that originate in a tank and are being replaced will have a ½” hole drilled in the pipe immediately below tank top for vent purposes.

17.3.7.4 Sounding tubes terminating on the Upperdeck are to be replaced from the first flange below the Upperdeck to the termination. Valves and/or caps are to be replaced with new, and labelled as per existing valves.

17.3.7.5 All sounding tubes in all tanks will be inspected at the striker plates for damage and the striker plate replaced if damaged beyond reasonable wear that will not survive for the 15 year extension. The Contractor shall assume [10] striker plates are to be replaced for costing purposes.

17.3.7.6 Vent terminals that are removed will have the flange face protected and the pipe system flange blanked. A non-destructible tag will identify the tank vent pipe. All labels /tags that are damaged beyond use or lost shall be replaced on the removed vents.

17.3.7.7 For costing purposes the Contractor shall assume the lengths of each individual section of pipe is in accordance with the diameter, length, and type specified in *Table 6*~~*Table 6*~~. Where the actual length deviates from this value, 1379 Action shall be initiated to account for the difference.

17.3.7.8 The Contractor shall provide, for costing of emergent work only, the cost per unit, split between labour and materials, of replacing additional sections of pipe and fittings, and making good the repair. For the purposes of these costs, a unit shall be considered as:

- A one (1) metre section of straight Victaulic pipe plus couplings and seals, for pipe OD from 50mm to 150mm in 25 mm steps;
- A one (1) metre section of straight welded pipe including flanges, for pipe OD from 50mm to 150mm, in 25 mm steps;
- One (1) Victaulic T-Piece 125 mm OD with couplings and seals;
- One (1) Victaulic 90 degree 125 mm OD fitting with couplings and seals;

17.3.7.9 All emergent work shall be initiated using 1379 Action.

17.4 Proof of Performance

17.4.1 Inspections

17.4.1.1 The Contractor shall visually inspect all pipes and fittings directly connected to the sections being removed, for blockages and damage prior to closing up the system. All blockages shall be removed, and damaged pipe replaced to the satisfaction of the Inspector. The Contractor shall assume [10] blocked pipes for costing purposes

17.4.1.2 Prior to any operational test, the Contractor is to ensure system alignment is complete, that there are no open ends and that pumps are operational and able to pump or to divert overboard.

17.4.2 Testing/Trials

17.4.2.1 Each portion of replaced piping will be inspected for completeness by system and will be operationally tested to normal operating pressures and vacuums. No leaks are the desired results. Repairs shall be made when leaks are present and a retest performed. All pressure is to be taken off of system before repairs are attempted. All systems are to be tested as operational prior to sea trials.

17.4.2.2 Prior to repairing any surrounding deck covering, the Contractor shall conduct non-destructive testing on all welds in way of deck and bulkhead penetrations in a

manner agreed with Transport Canada. As a minimum this shall be a soap and bubble test at the welded area of the deck. 80 PSI of air shall be applied to the weld on one side, and a liquid soap solution applied on the opposite side. All leaking welds are to be ground out and re-welded to the satisfaction of the Surveyor.

17.4.2.3 Upon completion of the air test, the contractor shall undertake a functional test of the systems to check for leaks from all connections opened during the refit. The test shall be in a manner acceptable to, and agreed with, Transport Canada and the Owner's Representative.

17.4.3 Certification

17.4.3.1 Systems requiring statutory approval shall be tested and certified, as required by Transport Canada.

17.5 Deliverables

17.5.1 Documentation (Reports/Drawings/Manuals)

17.5.1.1 The Contractor shall provide a copy of the test record for each deck drain, signed by the Contractor's authorised representative, the Transport Canada Marine Inspector, and the Owner's Representative.

17.5.1.2 The Contractor shall provide a copy of all test records for the anti-syphonic valves, signed by the Contractor's authorised representative, the Transport Canada Marine Inspector, and the Owner's Representative.

17.5.2 Spares

17.5.2.1 Not applicable

17.5.3 Training

17.5.3.1 Contractor's pipe fitters will need to be trained on installation procedures of Victaulic piping systems. Proper fit up of steel piping, butt welds, socket weld end gap clearance. PVC pipe fit up. Threaded pipe. CuNi sil –braze piping systems.

17.5.3.2 Contractor's welders shall be certified to CWB standards for all welding processes used. Certification shall be presented to Transport Canada and the Owner's Representative upon request.

17.6 Photographic Record

BB1	
BB2	

BB3	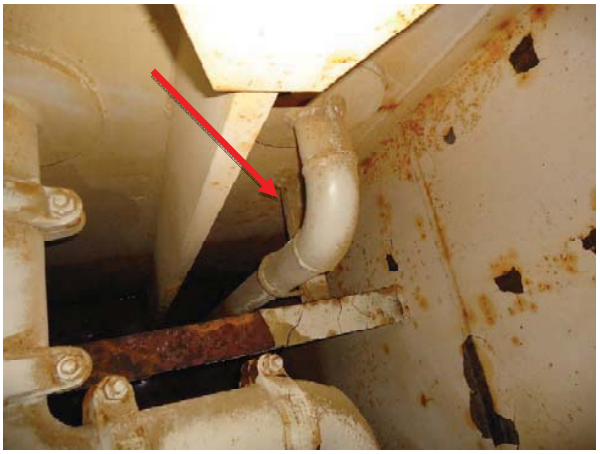

BB4	

FM1	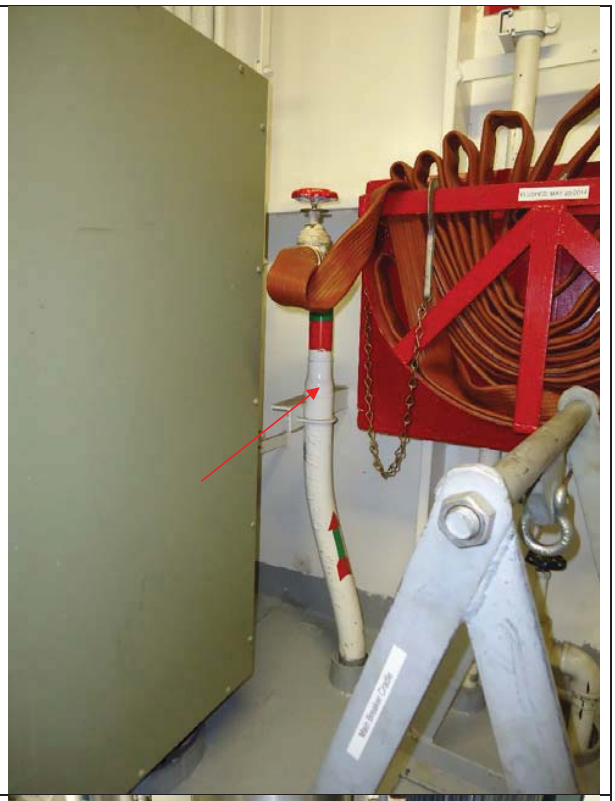
FM2	

FM3	
FM4	

FM5	
FM6	

BW1	
GW1	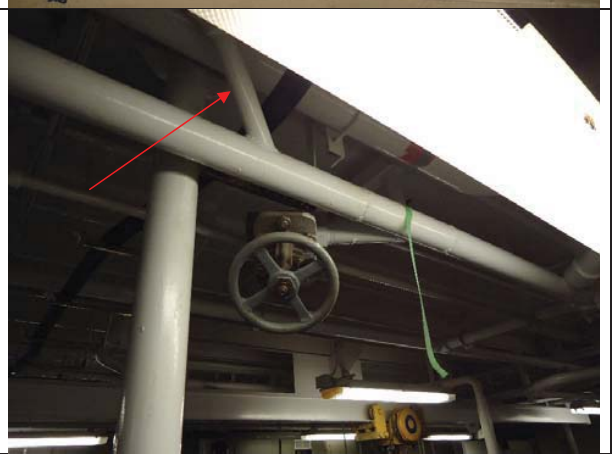

18.0 GREY WATER DECK DRAINS AND ANTI-SYPHONIC VALVES

18.1 Identification (CI #33)

The aim of this section is to replace all internal grey water deck drains, replace identified sections of grey water pipe, and locate and install anti-syphonic valves on the Grey Water system.

18.2 References

18.2.1 Equipment Data

18.2.1.1 See Appendix D for drawings & details. Full size drawings will be made available to the Contractor.

18.2.2 Drawings

Drawing Number	Description	Electronic Number
22-0708-01	Interior Deck Scuppers and Drains and Grey Water System Diagram.	
22-0708-05	Deck Drain Replacement Installation Detail	

18.2.3 Regulations

18.2.3.1 Canada Shipping Act, 2001.

18.2.3.2 Marine Machinery Regulations.

18.2.3.3 Hull Construction Regulation.

18.2.3.4 Hull Inspection Regulations.

18.2.3.5 Artic Shipping Pollution Prevention Regulations.

18.2.4 Standards

18.2.4.1 Lloyd's Register Rules and Regulations for Steel Ships.

18.2.4.2 International Association of Classification Societies Requirements Concerning Pipes and Pressure Vessels.

18.2.4.3 Threaded pipe to be in accordance with Lloyd's Register standard Rules and Regulations for Steel Ships, Chapter 12. Section 2.3 sub part 2.3.1, 2.5, 12.2.1, 2.10, table 12.2.6, 2.11, for piping design requirements.

18.2.4.4 PVC pipe and fittings to meet Lloyd's Register Rules and Regulations for Steel Ships, Chapter 12. Section 5.0, sub 5.1, 5.2 and 5.3, for piping design requirements.

18.2.4.5 The Contractor shall follow the general notes of Diagram's and Drawings.

18.2.4.6 All welding to be to a standard acceptable to, and approved by, Transport Canada, and appropriate to the application.

18.2.4.7 All steel pipe to be in accordance with ASTM A.53.

18.2.5 Quality Assurance Standards

18.2.5.1 The work shall be done complete in accordance with the Contractor's internal, approved, quality assurance standards and practices.

18.2.5.2 The work shall be completed to a standard acceptable to the Inspector and the Owner's Representative.

18.3 TECHNICAL

18.3.1 General

18.3.1.1 Good pipe fitting practice shall be used when replacing pipe.

18.3.1.2 Before proceeding with any work care and protection will be done to protect the surrounding area, fire proofing, covering of electrical for dust, tents for dust control to prevent damage and rework of surrounding area.

18.3.1.3 All systems shall be locked out and tagged out electrically and mechanically as required by systems engineer.

18.3.1.4 Open ended piping to be closed when not working for care and protection and prevention of foreign matter introduced into piping systems.

18.3.1.5 All pipe hangers removed during pipe replacement shall be replaced back to original.

18.3.1.6 All paint in way of welding work shall be removed to base material to ensure quality welds and fit up, and on PVC pipe to allow correct adhesion of PVC cement.

18.3.1.7 All steel pipe bending shall be five diameters (5D) as a minimum. Pre-cast Victualic Piping bends may be 3D if the existing pipe section has a 3D bend.

18.3.1.8 No thread tape is to be used on threaded pipe, liquid Teflon thread sealant, such as Loctite 567 or equal is to be used.

18.3.1.9 All Victaulic piping and fittings shall be installed according to Victaulic hand book 1-100. Lubrication of Victaulic gaskets to be in accordance with applicable Canadian standards.

18.3.1.10 All piping to be restored to original condition and paint coatings as specified by 30-000-000-ES-TE-001-Colour Coding Standard for Piping Systems. The selected paint coatings shall be designed for the specific application, such as tanks, bilges or living spaces.

18.3.2 Grey Water Deck Drains

18.3.2.1 Replace all deck drains specified in the 18.3.2.6, and shown on Drawing 22-0708-01- Deck Scuppers and Drains Grey Water System Diagram on a one for one replacement. All drains above the Main Deck shall be replaced back to the existing PVC piping (approx.3-4 feet) with ASTM A53 Grade A Schedule 40 galvanised steel pipe.

18.3.2.2 The Contractor shall be responsible for ensuring the system is suitably isolated, cleaned and empty of all fluids prior to breaking any connections.

18.3.2.3 Connect and plumb Galley equipment requiring drainage to existing GW drains, to vendor requirements, such as dishwashers, vent hoods, steam tables, ice machines, waste disposal units. All galley equipment to be piped with 90/10 copper/nickel and only sil-brazed joints to be used, no cleanout may be used.

18.3.2.4 Re hook and plumb officers pantry equipment drains to vendor requirements

18.3.2.5 Deck drains in poured decks (wash rooms, Showers, will be installed in accordance with Drawing 22-0708-05 - Deck Drain Replacement Installation Detail. Passage ways, gear lockers and any spaces with a painted deck will be installed flush. Tiled decks, such as the Galley, shall be installed flush and tile to be grouted down to flush. Trim rings shall be installed in any such areas where needed.

18.3.2.6 The Contractor is to disturb decks minimally as possible. Disturbed or removed areas of decking are to be brought flush to the surrounding deck, damaged floor coverings are to be matched as closely as practicable to existing. The Contractor is to consult Chief Engineer to approve floor covering products prior to installation.

18.3.2.7 List of Deck Drains by Deck:

- Wheel House deck (2) 40 mm/1 ½”
- Navigational Bridge deck (4) 40mm 1 ½”
- Officers deck (23) 40 mm/1 ½”
- Boat Deck (24) 40 mm 1 ½”. One is plug closure type.
- Upper deck (54) 40 mm 1 ½”. Three are plug closure type in Hospital/Dispensary area.
- Main deck (68) – [58 are 40 mm/1½”, 10 are 65 mm/2½” and two of the 65 mm/2½” are of the locking closure type].

18.3.3 Anti-Syphonic Valves

18.3.3.1 Inspect all anti syphonic valves as identified on Drawing 22-0708-01- Deck Scuppers and Drains Grey Water System Diagram.

18.3.3.2 Where no anti-syphonic valve is found, install new anti-syphonic valves as per Drawing 22-0708-01- Deck Scuppers and Drains Grey Water System Diagram. For the purposes of cost estimating assume [all 14] anti-syphonic valves are missing.

18.3.3.3 The Contractor shall be responsible for ensuring the system is suitably isolated, cleaned and empty of all fluids prior to breaking any connections.

18.3.3.2 List of Anti-Syphonic Valves

- Wheel house (1)
- Navigation Bridge deck (2)
- Officers Deck (3)
- Boat Deck (2)
- Upper Deck (4)
- Main Deck (2)

18.4 Proof of Performance

18.4.1 Inspections

18.4.1.1 The Contractor shall visually inspect the PVC pipes directly connected to the deck drain run out, and those adjacent to the anti-syphonic valves, for blockages prior to closing up the system. All blockages shall be removed, and damaged pipe replaced to the satisfaction of the Inspector. For the purposes of cost estimating, the Contractor shall assume [20] of the drain lines are blocked.

18.4.1.2 Prior to any operational test, the Contractor is to ensure system alignment is complete, that there are no open ends and that pumps are operational and able to pump or to divert overboard.

18.4.2 Testing/Trials

18.4.2.1 Prior to repairing any surrounding deck covering, the Contractor shall conduct non-destructive testing on all welds in way of deck drain replacements in a manner agreed with Transport Canada. As a minimum this shall be a soap and bubble test at the welded area of the deck. 80 PSI of air shall be applied to the weld on one side, and a liquid soap solution applied on the opposite side. All leaking welds are to be ground out and re-welded to the satisfaction of the Surveyor.

18.4.2.2 Upon completion of the air test, the contractor shall undertake a functional test of the deck drains to check for leaks from the deck box, and all connections up to and including the steel-PVC piping connection. This shall be accomplished by running

water through the drain for a minimum of 60 seconds, to determine if any leaks are present in the new installation of deck drain and piping components and to determine if there is any blockage down stream of test area. The Contractor is to notify the Chief Engineer 24 hrs in advance of this test. The Contractor shall notify the Chief Engineer again just prior to of the test so he may witness performance. Any leaks in piping shall be the Contractors responsibility to repair and retest.

18.4.2.3 The Contractor shall undertake a functional test of each anti-syphonic valves, to demonstrate the free flow of air through the valves.

18.4.3 Certification

18.4.3.1 Not Applicable.

18.5 Deliverables

18.5.1 Documentation (Reports/Drawings/Manuals)

18.5.1.1 The Contractor shall provide a copy of the test record for each deck drain, signed by the Contractor's authorised representative, the Transport Canada Marine Inspector, and the Owner's Representative.

18.5.1.2 The Contractor shall provide a copy of all test records for the anti-syphonic valves, signed by the Contractor's authorised representative, the Transport Canada Marine Inspector, and the Owner's Representative.

18.5.2 Spares

18.5.2.1 Not applicable.

18.5.3 Training

18.5.3.1 Contractor's pipe fitters will need to be trained on installation procedures of Victaulic piping systems. Proper fit up of steel piping, butt welds, socket weld end gap clearance, and PVC pipe fit up.

19.0 ALARM AND MONITORING UPGRADE

19.1 Identification (CI #180)

19.1.1 The intent of this specification is to upgrade the existing Siemens Step 5 Alarm and Monitoring and Power management system to newer Siemens Step 7 components. This will include an upgrade of the associated SCADA (System Control and Data Acquisition) HMI (Human- Machine Interface) and computers and software. All other Siemens components will be retained.

19.1.2 Bidders shall engage Siemens Canada to supply equipment, engineering, integration and supervision for all work.
The completed system shall meet all applicable TCMS and Class Requirements.

19.2 References

- TP 127E Transport Canada, Marine Safety, Ship Electrical Standards, Current Edition
- IEEE Std 45-2014 Recommended Practice for Electrical Installations on board ships
- Tank Sensors Existing Nov 2014.pdf

19.2.1 Equipment Data

- LSU-1 Programmable Controller, Siemens S5-155U, Fr 61S, Propulsion motor room stbd
- LSU-2 Programmable Controller, Siemens S5-155U, Fr 80P, Thermal Fluid Heating room
- LSU-3 Programmable Controller, Siemens S5-155U, Fr 115, Main eng room fwd
- LSU-4 Programmable Controller, Siemens S5-155U, FR 115, Main eng room fwd
- LSU-5 Programmable Controller, Siemens S5-155U, Fr 115, Main eng room fwd
- LSU-6 Programmable Controller, Siemens S5-155U, Fr 114S, Main Eng room, upper Fwd
- LSU-7 Programmable Controller, Siemens S5-155U, Cubicle C2, Main Control Room
- LSU-7.1 Programmable Controller, Siemens S5-155U, Cubicle C2, Main Control Room
- PMS Programmable Controller, Siemens S5-155U, Cubicle C3, Main Control Room
- DSS51 Auxiliary Generator #1, Siemens S5-95U PLC, MCR console
- DSS51 Auxiliary Generator #2, Siemens S5-95U PLC, MCR AG2 Cabinet
- LSU- 7.2 Auxiliary Generator #2, Siemens S5-95U PLC, AG2 Compartment, Officers Deck
- DSS51 Diesel Generator #1, Siemens S5-95U PLC, MCR console
- DSS51 Diesel Generator #2, Siemens S5-95U PLC, MCR console
- DSS51 Diesel Generator #3, Siemens S5-95U PLC, MCR console
- Telegraph/Propulsion Recorder, Siemens S5-95U PLC and printer in control room, MCR console
- PCN54 Pump Control PLC, , Siemens S5-95U PLC ,Cubicle C3, Main Control Room
- PCN54 Pump Control PLC, , Siemens S5-95U PLC, Cubicle C3, Main Control Room
- IGSS#1, Server 1 computer, Main control room console
- IGSS# 2, Server 2 computer, Main control room console

- WRKSTN1, Workstation monitoring Computer, Main Control Room console
- WRKSTN2, Engineers Office Monitoring computer, Engineers Office, Upper deck
- WRKSTN3, Chief Engineers Monitoring Computer, Chief engineers Cabin, Flight and Boat Deck
- Tank Gauge monitoring Panel #1 , Fr 61P, Auxiliary Machinery Space
- Tank Gauge Metering Panel #2, Fr 118P, Main Engine room
- Laserjet 4, MCR Console, class approval not needed

19.2.3 Drawings

Drawing Number	Description	Electronic Number
G62001-E0078-S001	Alarm and Monitoring and CTRL System overview	G62001-E0078-S001
34-0832-01 00-33	34-0832-01 (Updated Against Originals)A&M wiring diagram 1-64 sheets	34-0832-01 00-33
001e0082	AG2 001e0082 Auxiliary Generator Number 2 1-64 sheets	001e0082
001f0015	Event Recorder 001f0015 1-16 sheets	001f0015
001e0083 1-10	Central Power sheets 1-10 sheets	001e0083
G62001-E0078	Layout and Drawing standards 1-23 sheets	G62001-E0078
001e0078	LSU's 1-7 001e0078 sheets 1-317	001e0078
001e0080	PMS 001e0080 sheets 1-212	001e0080
008e0080	PMS Hardware 008e0080 1-4 sheets	008e0080
008e0081	Pump&Valve Hardware 008e0081 1-5 sheets	008e0081
001e0081	PUMPS 001e0081 1-98 sheets	001e0081
008e0078	S5 hardware 008e0078 1-7 sheets	008e0078
23-0600-02	Machinery Arrangement Plan at Lower Deck and Elevation STB'D Side	23-0600-02
23-0600-06	Machinery List (Revision 8)	23-0600-06
33-0882-04	Wireway Deck Plan Flight and Boat Deck CTR. FR.-67.5 To FR.-150.5	33-0882-04
33-0882-07	Wireway Deck Plan Upper Deck FWD FR.-119.5 To 150 & Forecastle	33-0882-07
33-0882-11	Wireway Below Main Deck Frame 29.5 To 77.5	33-0882-11
33-0882-12	Wireway Deck Plan Below Main Deck Frame 77.5 To 126.5	33-0882-12
33-0882-13	Wireway Deck Plan Below Lower Deck Frames 29.5 To 46.5 Sheet 2 of 2	33-0882-13
33-0882-13	Wireway Deck Plan Below Lower Deck Frames 29.5 To 77.5 Sheet 1 of 2	33-0882-13
33-0882-14	Wireway Deck Plan Below Lower Deck Frame 77.5 To 127.5	33-0882-14

19.2.3.1 All drawings included are in pdf format for bidding purposes. The actual Autocad drawings will be provided to the winning bidder. All drawings to be modified and showing the as built as per new connected system at Contractors expense. All Autocad drawings to be compatible with "Autocad" format 2011. This does not include the drawings as highlighted at the bottom of table above.

19.2.4 Regulations

19.2.4.1 All work performed and any modifications made, must be compliant with the latest Canada Shipping Act Regulations and in particular to the Marine Machinery Regulations. All work shall meet Transport Canada approved class regulations.

19.2.5 Standards

- TP 127E Transport Canada, Marine Safety, Ship Electrical Standards, Current Edition.
- IEEE Std 45-2014 Recommended Practice for Electrical Installations on board vessels.

19.2.6 Environmental Requirements

The equipment shall be designated for the following service conditions:

- Air temperature range of 0°C to 55°C and shall operate without deterioration in air temperature peaks up to 70°C
- Water temperature, minus 2°C winter; 30°C summer
- Inclination in all directions from the mounting position 22.5°, rolling 22.5°, 10 seconds full period; and linear vertical acceleration of ± 1.0g
- A permanent list of 15° port or starboard, not cumulative with the roll
- Pitch of vessel, +/-12°, cycle frequency 6 seconds
- A permanent trim of 5° above or below the horizontal, not cumulative with the pitch
- Under the following conditions of relative humidity: – 95% r. h. at temperatures up to 45°C; and – 70% r. h. at all other relevant temperatures.
- Shock loading: 2.5 g horizontal, 1.5 g vertical
- Under the following vibration conditions: – 2.0 - 13.2 Hz, displacement amplitude ± 1.0 mm; – 13.2 - 80.0 Hz, acceleration amplitude ± 0.7 g, maximum acceleration .7 g natural frequencies at supports for equipment and parts of equipment shall not lie within the 0 - 80 Hz range, except that where they cannot be kept outside this range by constructional design methods, the vibration shall be damped so that undue amplification is avoided.
- Any conditions not mentioned to follow most current version TP127E or IEEE45-2002

19.2.7 Quality Assurance Standards

19.2.7.1 The system integrator is to submit a detailed testing procedure and schedule for testing of all component's, and software before and after installation. This procedure will be submitted after the award of contract to the Technical Authority . Testing to include all existing alarm points and SCADA screens as they exist in the original system and all newly configured alarm points and SCADA screens.

19.3 Technical

19.3.1 The existing Programmable logic controllers and computers as detailed in 19.2.1 are to be upgraded to Siemens Step 7 PLC's with compatible SCADA HMI software equivalent to Siemens SIMOS IMAC 55. This will include new PLC's configured for Hot Backup~~.~~

19.3.2 – 19.3.7 Deleted

19.3.8 New PLC hardware is to be supportable out to 2029 as a minimum. The system integrator will show documented proof from the manufacturer of product parts and service to a minimum of 2029.

19.3.9 Siemens contact familiar with existing setup and arrangement:
Tom Penton
Account Manager
Customer services Division
Siemens Canada
709 722 7282 Ext. 111
Cell# 709 689 3562
thomas.penton@siemens.com

19.3.10 The new SCADA computers will be based on currently supported Microsoft operating system with hardware that exceeds the minimum acceptable requirement for the SCADA software.

19.3.11 The current Sinec H1 bus A and B are to be replaced with a communication bus compatible with the new PLC's. The existing Ethernet connections to the IGSS SCADA HMI computers can be re-used if proven to be compatible and reliable after testing. Contractor is to be made aware that cable runs outside of the engine room may involve asbestos abatement, any abatement to be covered by 1379 action.

19.3.12 All alarm points as existing are to be functionally tested after the new system is installed. If the actual alarm point cannot be simulated, it can be simulated by approved signal calibration equipment if used at the closest point available to the actual alarm device to minimize cabling errors. A recent calibration certificate must be provided for any such calibration equipment. Any defects to the external alarm cabling that is a not a direct action of the upgrade will be repaired by 1379 action.

19.3.13 The existing Tank monitoring panels (as detailed in 19.2.1) are to be upgraded so that they may take advantage of industry standard 4-20ma signal processing.

Incompatible tank sensors are to be identified and replaced as part of this specification. As a result of this replacement, where gas freeing is required where a tank or space involved is not already opened and gas freed for another specification item or cable replacement to be covered by 1379 action.
There are a total of 15 0-1ma sensors that will need to be replaced and are identified in the included **Tank Sensors Existing Nov 2014.pdf** listing in the drawing package. Two fuel tanks (#8 port and stbd) and the aft and fwd stab tanks have flanged tank bottom style sensors located inside the tanks. All other sensors are mounted on the individual tank side and can be accessed through an isolation valve mounted adjacent to the sensor. The #8 fuel tanks will be cleaned prior to this contract but will have to be confirmed gas freed prior to entry or work is performed. The aft and fwd stab tanks will be opened up as part of the bubbler piping replacement spec. Contractor responsible for costs associated with confined space entry procedures required to replace the sensors.

19.3.14 The Communication bus is to be such that a failure in one bus line will not interrupt communication within the system. Such communication error (i.e: Wire break or hardware failure) will result in alarm detailing as such on the HMI screens.

19.3.15 Failure of one of the HMI servers will also result in an alarm on the remaining server detailing fault.

19.3.16 The upgrade of the PLC's will take place in the same footprint as the removed Step 5 components.

19.3.17 It is the Contractors responsibility to identify and record the correct function of all alarm parameters for the existing PLC's and SCADA system. This includes all High/Low/pre-alarm points and time delays.

19.3.18 : The Contractor is to confirm they understand the correct function and operation of all power management and pump control functions as they exist. This will be part of test program as outlined in 19.2.7.1.

19.3.19 After the upgrade, the Contractor is responsible to test the full functionality of the power management, pump control system and alarms to ensure it perform correctly.

19.3.20 The Contractor is to record all points and screens as they are being monitored on the existing IGSS SCADA software. As a minimum the new SCADA software will emulate all points and Graphical User interfaces as they exist.

19.3.21 The SCADA software will have the ability to record alarm points in a history log detailing date and time in the order of sequence as they appeared. This alarm log and all screens will be able to be printed to a new Laserjet color printer that will be able to connect to any of the SCADA computers in the Master Control Room.

19.3.22 Alarm Points will be arranged so that all active alarms will be displayed on one main screen, with the most current at the top. As new alarms become active, the screen will auto refresh. Any point in a pre-alarm condition will display in yellow with a point in alarm condition displayed in red. A return to normal will display as green or no color. All points will denote the contact state or value along with the alarm point set point.

19.3.23 **Alarm & Monitoring - General:**
i) All alarm points shall have parameter for delays;
ii) All points in alarm shall give a clear textual message on every graphical screen (blinking red);
iii) All points in alarm, but acknowledged shall give a clear textual message on every graphical screen (steady red);
iv) All points that went into alarm, returned to Normal, but not acknowledged shall give a clear textual message on every graphical screen (steady green);
v) Group blocking of alarms on machinery shutdown will be possible and emulate existing scheme
vi) Data logging of major system values, stored on local hard drive, but available thru LAN;
vii) All alarms shall be able to be printed on the local printer in the MCR, showing the time & date of the event, and a textual message of the condition;
viii) Possibility of manually changing the alarm set points for all alarm points.
ix) Silencing new alarms with the local annunciator will provoke temporary shutdown of audible alarm on all active stations onboard the vessel. From that moment, the operator shall have two (2) minutes to reach one of the three (3) SCAD computers in the MCR to accept the alarm definitely; otherwise, the audible alarms will be triggered again. In the event of a second alarm during this two (2) minute delay, the audible alarm sequence will reactivate. The programming/diagnostic laptop will be so configured so that it can silence/accept and block alarms.
x) Only the MCR and programming laptops will have the ability to silence/accept and block alarms in operator mode.
xi) Reset of all PLC faults shall be available in the data display screens.

19.3.24 The system shall be supplied with 3 web-viewer licenses and the TCP addresses shall correspond to the ship's network to allow display of information via the shipboard network.

19.3.25 The SCADA software will have the ability to record all blocked alarms on a single alarm screen. As well any alarms that are blocked or unblocked are to be recorded on the history log.

19.3.26 SCADA software will have the ability to record in real time at least 12 multiple points in a graphical interface denoting contact state or analog level depending on point to be monitored. This trending can be repeated on other operator stations. The trending will be able to be saved so that it can be recalled at a later date for viewing and diagnostics.

19.3.27 SCADA software will be capable of have as a minimum 4 split screens on any individual monitor. There will be the capability to have any combination of screens on any of the SCADA computers as configured. The new monitoring screens will have 16:9 screen format and will be as large as practically possible. Touch screen technology can be incorporated but this will not however be the only means of control and each computer will have individual wired keyboards and mouse. No wireless control will be allowed.

19.3.28 SCADA software will be protected from unauthorized access and provide different access levels for personnel. It will permit the alteration of system set points by password protection for different system levels and have at least four levels of operation. All computers will have the same user name and passwords for all levels. Administrator level or higher changes will be automatically uploaded to other SCADA computers after programming prompt warning that changes will be uploaded to other computers on the network.

1. Operator level. - View all alarms/pages and histories, acknowledge, accept and silence alarms. This level will not be able to make changes to alarm points.

2. Administrator Level. - All functions of #1 above with the addition of adjusting time delays, enabling and disabling alarms.

3. Programming level. - All functions of #1 & 2 with ability to change screens and program parameters.

4. Master Level - All functions of 1,2, & 3 with ability to do high level programming changes.

19.3.29 Upgraded Step 7 PLC's will utilize existing wiring to external connection points. (digital and analog alarm points). Where wiring lengths are of insufficient length, new wiring of will be ran from existing terminal blocks in the adjacent terminal strip. In no cases will butt splices or wire extensions be used.

19.3.30 Any new cabling utilized to be of similar construction and color as existing with equivalent wire numbering scheme used.

19.3.31 All new components including permanently mounted Personal Computers, PLC's and software to have Class approval as recognized by TCMS as part of the DSIP program (Lloyd's Register of Shipping, American Bureau of Shipping, Germanischer Lloyd, Det Norske Veritas or Bureau Veritas). Proof of class certification to be included with bid submission.

19.3.32 A troubleshooting Laptop that is able to communicate with the SCADA program and also have programming software to modify and view/monitor individual PLC programs will be provided. A connection point at each PLC shall provided by the system integrator to allow this functionality. Programming changes will be possible on this laptop so that changes may be tested without affecting the rest of the SCADA system.

19.3.33 All new cabling to be TC approved marine cable as per Section 13 of TP-127E. Installation will be as per Section 13 of TP-127E. All cables shall have non-corrosive metal tags identifying cables at every entry and exit point and transit location. Tags to be affixed using non-corrosive metal fasteners. Installation and cost of all new transits, cable trays, hangers and securing arrangements responsibility of contractor. All cables to be secured using metallic non-corrosive clips or ties. All cable routes to be approved by the TA before installation.

19.3.34 Software supplied for the operation of all new equipment will be supplied with full licensed copies of software on disc/stick that can be installed and working onsite and off-line without contacting manufacturer due to unreliability of communications in the Arctic. Full electronic and printed versions of software programming including system nomenclature of all PLC programs will be supplied. All master OEM passwords to enable or disable all functions of installed system to be provided to the TA and Chief Engineer. All computers and laptops will be provided with spare imaged hard drives per unit as per the final installed version.

19.3.35 Nameplates - All devices are to be identified by nameplates of black plastic laminate with white engraved legend, in both English and French, and shall be adequately secured by means of screws to prevent loosening under conditions of heavy vibration.

19.3.36 Diagnostic Computers/special test gear (laptop) will be provided with appropriate communication software and cabling to monitor/diagnose/modify programming as needed. All special tools and test equipment needed for routine tests/calibration and maintenance to be provided by the system integrator.

19.3.37 All parts as removed to be removed ashore and disposed of at contractor's expense in accordance with local environmental regulations.

19.3.38 Any wiring that is obsolete to the new installed system (ie: communication bus) is to be removed and disposed of at contractors expense. All opened transits if not used for new cabling to be returned to original functional fire and watertight integrity as defined by specific location and to the satisfaction of the chief engineer and TC requirements.

19.4 Proof of Performance

19.4.1 Inspections

19.4.1.1 All installations and wiring to be inspected to the approval of the chief engineer or designate and the attending TCMS inspector.

19.4.2 Testing/Trials

19.4.2.1 All alarm points including set point, alarm contact state, and programming logic to be checked against original supplied drawings to ensure changes have not been made since original commissioning. This will include recording all IGSS screens and configurations.

19.4.2.2 All alarm points as existing are to be functionally tested as far as practically possible after the new system is installed. If the actual alarm point cannot be simulated due to access (ie: tank sensors), it can be simulated by approved signal calibration equipment if used at the closest point available to the actual alarm device to minimize cabling errors. A recent calibration certificate must be provided for any such calibration equipment. Any defects to the external alarm cabling that is a not a direct action of the upgrade will be repaired by 1379 action.

19.4.3 Certification

19.4.2.1 All included hardware to have copies of class certificates denoting approval and any expiry dates if applicable.

19.5 Deliverables

19.5.1 Documentation (Reports/Drawings/Manuals)

19.5.1.1 The Contractor shall supply three (3) hard copies and 2 Electronic of all copies of the following:

- All hardware manuals from as-fitted equipment in English and an electronic copy of French to be provided if available from manufacturer.
- All software programming manuals
- As fitted drawings in electronic Cad format as well as hard copy
- Copy of all as commissioned programming in electronic and hard copy
- Recommended spare parts list from FSR
- Listing of all hardware catalog cuts with part numbers including revisions highlighted
- Copy of all training materials in hard and electronic copy.

19.5.2 Spares

19.5.2.1 Contractor to supply one set of spares which will include at least 1 type of every component as used in the PLC system.

19.5.2.2 Contractor is to supply one fully working SCADA computer, complete with monitor, keyboard and mouse included with preloaded software and instructions so that it may be swapped out with any permanently mounted unit.

19.5.2.3 All five (5) supplied SCADA computers to have separate imaged hard drive of final version of software and alarm points as configured and as built. Contractor to include copy of imaging software for backup/updating purposes.

19.5.3 Training

19.5.3.1 Contractor to allow for services of FSR to provide 2, 1/2 day sessions with 1 trainer for ship's crew for correct operators mode. An additional 2 days training will be made available for the 2 ships Electrical Officers, Senior Engineering Officer and Chief Engineer Officer per crew (total of 4 days). Training materials to be supplied for 8 persons per shift with details of additional cost per person above the required 8 persons per shift.

20.0 PIPEWORK ANTI-FOULING SYSTEM RENEWAL

20.1 Identification (CI #101)

20.1.2 This specification covers the necessary procurements and work to renew, repair as required, test and reactivate the SW pipework anti-fouling (A/F) system.

20.2 References

20.2.1 Equipment Data

19.2.1.1 The A/F system consists of a control panel located in the main machinery space, 120/1/60 input, and 20 anodes, 10 copper and 10 aluminum, disposed in the main and auxiliary seachests. Dwg. 34-0823-02 applies, with the exception that the anodes in the cross bay have been removed and replaced with sacrificial anodes.

20.2.2 Drawings

Drawing Number	Description	Electronic Number
590—96	Docking Plan	
34-0823-02	Anode Installation	
	System Manual	

20.2.3 Regulations

20.2.3.1 Transport Canada TP127

20.2.3.2 Lloyds Rules

20.2.3.3 Local safety regulations applicable to the shipyard.

20.2.4 Standards

20.2.4.1 Shipyards Quality Assurance Plan.

20.3 Technical

20.3.1 Contractor shall engage the services of M. Yeatman, Andover Management Inc. 7 Canal St., Dartmouth, NS B2Y 2W1, cell 902 488 4119, andover@eastlink.ca to supervise the work, test on completion, and report to CCG.
Prior to work, contractor shall contact the Chief Engineer to carry out isolation and lock-out of power supply to the system.

20.3.2 New cabling shall be installed. Cables to be marine approved armoured single conductor No.14 AWG. Alternatives will be considered if single conductor is not readily available. Any alternative put forward by the contractor must be 14 AWG. There are 20 anode cables and 3 ground cables. Approximately 300 meters of cable will be required. Cables to be fitted with straight crimp-on ends to fit the terminal block in the panel, and stake-ons to suit the tail cables on the anodes. Any defective glands on the safety caps shall be replaced.

20.3.2 Removals. Contractor shall remove and store with vessel stores marked as scrap all the 20 A/F anodes regardless of their degree of consumption, and clean the safety caps and the plating in way of their installation. Badly corroded or damaged safety caps shall be replaced with new ones.

20.3.3 New anodes. The Owner shall supply 20 new anodes complete with mounting hardware in accordance with the drawings (the anodes shown on dwg. 34-0823-02 except for the fourteen anodes in the cross bay numbered AP9 – AS21, which have been permanently removed), The Contractor shall purchase six (6) spare old type safety caps from EMCS Industries Ltd., 2066 Henry Ave. West, Sidney BC V8L 5Y1, email emcsltd@ramsaygroup.com. The mounting hardware shall suit the old type safety caps.

20.3.4 The anodes shall be installed with 90-100 lbs.ft torque, and the cables reconnected. The safety cap covers shall be left off until the trial float-off of the vessel, and inspected for leaks. When proven tight, the caps shall be filled with Vaseline and the covers replaced with new "O' rings as necessary.

20.3.5 The existing control panel shall be scrapped, and replaced in the same location with a state of the art unit designed to control the current in the 0.2 to 2.0 amps range to twenty (20) anodes. The 3c#14, 120/1/60 supply cable from panel P-101 may be reused if found in good condition.

20.3.6 New control panel contractor supply. The Contractor is to supply and install a 20W MGPS panel available from Jastram Technologies Ltd. 22 Trider Crescent, Dartmouth, Nova Scotia, B3B 1R6. Tel. (902) 468-6450 email mstarratt@jastram.com or equivalent.

20.3.7 After refloating and before reconnecting the cables at the panel, FSR shall check the resistance and potential. Power will then be restored to the panel, and the FSR shall reconnect the anode and ref. electrode cables.

20.4 Proof of Performance

20.4.1 Inspections

19.4.1.1 Contractor shall assist CCG and its representatives to inspect the work after completion.

20.4.2 Testing/Trials

20.4.2.1 Whilst vessel is undocking the Contractor shall provide necessary manpower to monitor anode glands to ensure watertight integrity.

20.4.2.2 The FSR shall carry out a full system check on the system after the vessel has been Re-floated. One shipyard electrician shall be available to assist.

20.4.3 Certification

20.4.3.1 N/A.

20.5 Deliverables

20.5.1 Documentation/Manuals/Reports

20.5.1.1 The Contractor shall supply manuals for the new control panel.

20.5.1.2 The Contractor shall supply FSR Report complete with readings sheet and list of recommended spares..

20.5.1.3 The Contractor Shall Supply system drawings. The Contractor is to develop a system drawing in AutoCad 2007, encompassing all anodes, wiring runs and new control panels complete with locations, type of anode, wiring run and identifiers, and panel position and identifiers.

20.5.2 Spares

20.5.2.1 N/A.

20.5.3 Training

20.5.3.1 The Contractor shall arrange for the FSR to provide 2 hours of training to Electrical Officer and Engineering Officer to demonstrate appropriate operation and maintenance.

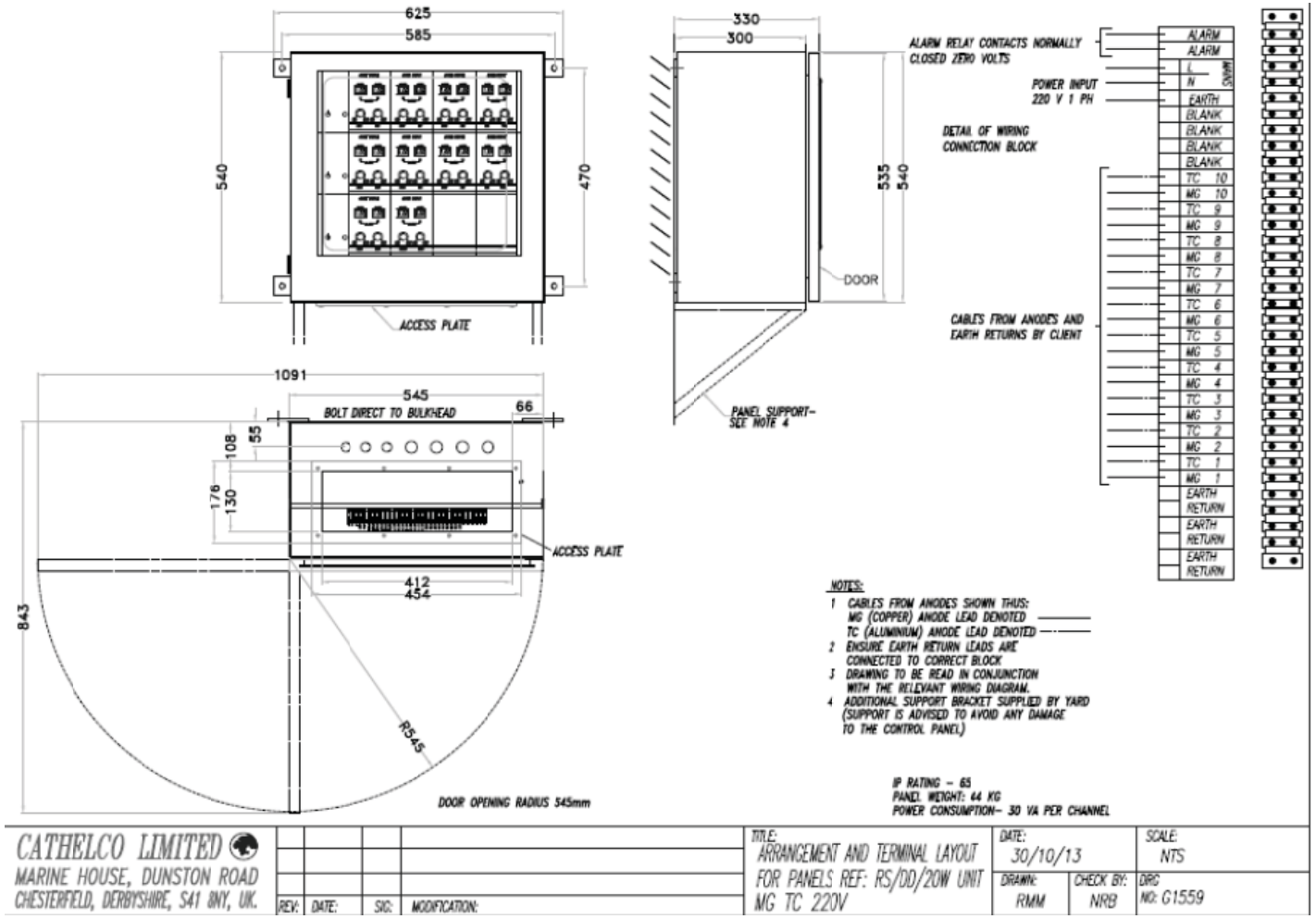
625
585
540
470
ACCESS PLATE
330
300
535
540
DOOR
PANEL SUPPORT– SEE NOTE 4
ALARM RELAY CONTACTS NORMALLY CLOSED ZERO VOLTS
POWER INPUT 220 V 1 PH
DETAIL OF WIRING CONNECTION BLOCK
CABLES FROM ANODES AND EARTH RETURNS BY CLIENT
ALARM
ALARM
L
N
SWING
EARTH
BLANK
BLANK
BLANK
BLANK
TC 10
MG 10
TC 9
MG 9
TC 8
MG 8
TC 7
MG 7
TC 6
MG 6
TC 5
MG 5
TC 4
MG 4
TC 3
MG 3
TC 2
MG 2
TC 1
MG 1
EARTH RETURN
EARTH RETURN
EARTH RETURN
1091
545
BOLT DIRECT TO BULKHEAD
66
108
55
176
130
ACCESS PLATE
412
454
843
R545
DOOR OPENING RADIUS 545mm
NOTES:
1 CABLES FROM ANODES SHOWN THUS:
MG (COPPER) ANODE LEAD DENOTED
TC (ALUMINIUM) ANODE LEAD DENOTED
2 ENSURE EARTH RETURN LEADS ARE CONNECTED TO CORRECT BLOCK
3 DRAWING TO BE READ IN CONJUNCTION WITH THE RELLEVANT WIRING DIAGRAM.
4 ADDITIONAL SUPPORT BRACKET SUPPLIED BY YARD (SUPPORT IS ADVISED TO AVOID ANY DAMAGE TO THE CONTROL PANEL)
IP RATING – 65
PANEL WEIGHT: 44 KG
POWER CONSUMPTION– 30 VA PER CHANNEL
CATHELCO LIMITED
MARINE HOUSE, DUNSTON ROAD
CHESTERFIELD, DERBYSHIRE, S41 8NY, UK.
REV:
DATE:
SIG:
MODIFICATION:
TITLE:
ARRANGEMENT AND TERMINAL LAYOUT FOR PANELS REF: RS/DD/20W UNIT MG TC 220V
DATE:
30/10/13
SCALE:
NTS
DRAWN:
RMM
CHECK BY:
NRB
DRG NO: G1559

21.0 INTERING SYSTEM RENEWAL

21.1 Identification (CI #185)

The intent of this specification is to modernize the control and refurbish various components of the vessel's combined heeling and roll stabilization system. Intering Roll stabilization and rapid heeling System. The Intering roll stabilization and rapid heeling system uses four pairs of interconnected, U-shaped tanks on opposite sides of the ship. The tanks can be pressurised via roots type blowers to force air from one side to the other for heeling or the tanks can be vented to allow free flow of water as in a passive anti-roll tank for stabilization. The valves to and from the tanks and venting of the tanks is controlled either automatically or manually through a control system.

21.2 References

21.2.1 Equipment Data

21.2.1.1 System: AR / Heeling – S2 – K4 – 1126

21.2.2 Drawings

Drawing Number	Description	Electronic Number
1126	Intering Arrangement	
1126-7	Intering Cable Scheme	
1126-19	Intering Diagram Pneumatic System	
1126-12	Intering Function Scheme	

21.2.3 Regulations

21.2.3.1 As per Transport Canada Regulations. TP127

21.2.3.2 Lloyds Rules

21.2.4 Standards

21.2.4.1 Shipyards Quality Assurance Plan.

21.2.5 Quality Assurance Standards

21.2.5.1 Contractor to submit a detailed testing procedure and schedule for testing of all component's, and software after installation.

21.3 Technical

21.3.1 Contractor is to arrange for the services of Hoppe Bordmesstechnik GmbH, Kieler Strabe 318, D-22525 Hamburg, Germany. Wolfgang Shultz email: w.shultz@hoppe-marine.com Internet: www.hoppe-marine.com
Tel: +49 40 561949 0
Fax: +49 40 561949 99

Note: Contractor is to allow 35k for an FSR in bid preparation. Travel expenses will be dealt with by 1379 action based on proof of invoice.

21.3.2 **Controls**

21.3.2 Remove existing control unit and install new owner supplied control unit in existing control unit. Existing cabling will remain in place.

21.3.3 Remove existing door mounted control unit from door of control unit and install new owner supplied control unit in door.

21.3.4 Remove existing console mounted control unit on Bridge and install new owner supplied control unit.

21.3.5 **Pneumatic Module 1 Stabilizer**.

21.3.6 Remove 12 ea. NG6 solenoid valves and install valve replacement kit ISO-2 .

21.3.7 Remove 2 ea. filter units and install F64GK replacements.

21.3.8 Replace pressure switches with 6 ea. Pre10 pressure switches.

21.3.9 **Pneumatic Module 11 + 111**

21.3.10 Remove 8 ea. NG6 solenoid valves and install valve replacement kit ISO-2 .

21.3.11 Remove 2 ea. filter units and install F64GK replacements.

21.3.12 **Stabilizer Valves**

21.3.13 Remove 24 valves, disassemble all valves for inspection.

21.3.14 Valves shall be cleaned thoroughly and painted inside stabilizer valve bodies. Contractor support is required.

21.3.15 Valves are to be reassembled utilizing owner supplied Valve inserts, seals, packing and screws.

21.3.16 Valves are to be re-installed in the positions from which they were removed.

21.3.17 **Valve Group Heeling System**

21.3.18 Remove 8 valves, disassemble all valves for inspection.

21.3.19 Valves shall be cleaned thoroughly and painted inside stabilizer valve bodies. Contractor support is required.

21.3.20 Valves are to be reassembled utilizing owner supplied Valve inserts, seals, packing and screws.

21.3.20 Valves are to be re-installed in the positions from which they were removed.

21.3.21 **Valve Group Heeling System**

21.3.22 Remove 4 valves, disassemble all valves for inspection.

21.3.23 Valves shall be cleaned thoroughly and painted inside stabilizer valve bodies.

21.3.24 Valves are to be reassembled utilizing owner supplied Valve inserts, seals, packing and screws.

21.3.25 Valves are to be re-installed in the positions from which they were removed.

21.3.26 **Tank Valves Heeling**

21.3.27 Remove existing 8 butterfly valves and install new.

21.3.28 **Blower Unit**

21.3.29 The two (2) blower units are to be dismounted, securely crated and shipped to the factory for overhaul.
Blower Unit Data: GMb 14.10 A, Ser # 269489 & 269490, 45.0 m^3/min, 54.3kW - 550mbar.

- Factory Located Montreal, Canada.
- Contact: General Manager, Aleric Haerens
- Ph: 1 450 424-3966 ext 223 Fax: 1 450-424-3985
- Alaric.Haerens@aerzen.ca
- Shipping,O/H and testing costs are to be addressed by 1379 action based upon proof of invoice.

21.3.30 Contractor is to remove two (2) blower motors from the vessel.

21.3.31 Motors are to be thoroughly cleaned, Meggered and bearings are to be replaced.
Motor Data: AEG-250MB4-3029847MR, 575V-Delta-75A, 1780 rpm / 6oHz
Rotor DS4 I.C.IF-IP54, VDE 0530 KT45º - 417kg.

21.3.32 FSR to remove existing motor starter cabinet and install new owner supplied motor starter unit.

21.3.33 FSR to remove and overhaul two (2) Pressure reduction units using owner supplied parts and re-install in good order.

21.3.34 FSR to replace the two suction filters using owner supplied filters.

21.3.35 Upon receipt of factory overhauled blowers, the blowers and motors are to be reassembled on board and remounted by the Contractor.

21.4 Proof of Performance

21.4.1 Inspections

21.4.1.1 All installations and wiring to be inspected to the approval of the chief engineer or designate and the attending TCMS inspector.

21.4.2 Testing/Trials

21.4.2.1 Alignment of motor and blower sets are to be taken prior to disassembly are to be taken and recorded.

21.4.2.2 Alignment readings of motor blower sets are to be taken after installation and recorded.

21.4.2.3 Upon completion of installations the system is to be tested thoroughly in all modes of operation to the satisfaction of the Chief Engineer.

21.4.2.4 Once vessel is undocked and deemed operationally ready for sea trials, the system is to be fully trialed in all modes possible based upon environmental limitations.

21.4.2.5 Contractor shall arrange trials schedule based upon discussions with FSR to facilitate full testing of Stability and Heeling functionality.

21.4.3 Certification

21.4.3.1 Equipment installed to be “Class Approved”

21.5 Deliverables

21.5.1 Documentation (Reports/Drawings/Manuals)

21.5.1.1 The Contractor shall supply operation manuals as per Section 6.2 for the new control panel.

21.5.1.2 The Contractor shall supply updated parts list for system.

21.5.2 Spares

21.5.2.1 The Contractor shall supply a recommended spares list complete with cost and lead time.

21.5.3 Training

21.5.3.1 The Contractor shall arrange for the FSR to provide 2 hours of training to demonstrate appropriate operation and maintenance.

22.0 STEERING GEAR CONTROL

22.1 Identification (CI #188)

22.1.1 The intent of this specification shall be to provide the services of a Jastram Engineering Ltd approved Field Service Representative to oversee and direct the Contractor for the renewal / installation of the hydraulic and electrical components of the new Jastram Steering System S4-700-1-35. All new parts are owner supplied while some existing parts are to be renewed as described in appropriate sections to follow and / or within Table 1 New Components List, Drawing C-8-904 Rev B Existing System Pipe Diagram, and Drawing D-8-927 Existing System Schematic.

22.1.2 Unless otherwise stated, the Contractor shall supply all materials, equipment, and parts required to perform the specified work. The work shall follow the installation and service manual provided.

22.2 References

22.2.1 Nameplate Data:

Specification:
Steering System: S4-700-1-35
Torque: 506311 ft/lb
Rudder Angle: 35° / 35°
Rudder Turning Rate: 20 seconds (35° / 35°)
Steering Mode: Power, Electric, Full Follow Up, 75 HP, 575 V

22.2.2 Guidance Drawings (see Appendix "K")

Note: Drawings have Notes Sections, please ensure these notes are read and understood.

Drawing Number	Description	Electronic Number
D-611656	Hydraulic Schematic for Refit Steering Note: Items 4 through 8 are new items/ item 9 remains from existing.	
D-601870	Piping Drawing for Refit Steering	
D-521430	Hydraulic Power Unit Dimensions	
C-521429	Hydraulic Power Unit OAD	
D-751876	Steering Control Cabling Diagram	
D-751922	Motor Starter & Alarm Cabling Diagram	
D-721432	Steering Stand Overall Dimensions	
C-721220	DSC Enclosure Overall Dimensions	

C-721396	MCP 100-22 Junction Box Overall Dim.	
B-721400	Steering Control Unit Overall Dim.	
B-721319	CP 375 Control Panel Overall Dim.	
C-721147	Rudder Feedback Unit (RFU 2000) OAD	
B-721223	Lever Controller (LC 300) OAD	
A-721018	Jog Lever Overall Dimensions	
B-721242	Rudder Angle Indicator (RAI 380)	
C-721204	3-Face Rudder Angle Indicator (RAI 3300) OAD	
B-721334	Indicator AC/DC Converter Overall Dimensions	
A-721291	RAI (ROI) Dimmer Pot Overall Dimensions	
C-721333	Emergency Station Junction Box Overall Dimension	
B-721	CP-36-2 Change Over Panel Overall Dimensions	
C-721401	Motor Starter and Alarm Overall Dimensions	
C-721393	Motor Starter and Alarm Overall Dimensions	
B-721230	Hydraulic Lock Processor Box Overall Dimensions	
C-8-904 B	Existing System Piping Diagram	
D-8-927	Existing System Hydraulic Schematic	
	Jastram Installation and Service Manual	

22.2.3 Tables

22.2.3.1 **Table 1**. **New Components List (Owner Supplied)**

Item Number	Description	Quantity
1	Hydraulic Power Unit, 75 Horsepower, Proportional	2
2	Emergency Hydraulic Power Unit, 10 Horsepower, ON/OFF	1
3	Digital Steering Controller, c/w 2 x MCP, 24 vdc	2
4	MCP 100-20 Mode Control Processor 2 x DSC	2
5	HLA Hydraulic lock arm manifold assembly	2
6	Hydraulic lock alarm processor interface	1
7	EW200-20 electric helm, c/w s pots	1
8	JO100-2 jog switch, c/w 2 sets micro switches	3
9	JO100-1 jog switch	1
10	LC300-2 Yacht style lever controller, c/w s pot	3
11	RAI / ROI 380, rudder angle (order) indicator, 3.8 inch dial face, 24 VDC	3
12	ROI 280, rudder order indicator, 2.8 inch dial face, 24 VDC	1
13	RAI 3300, panoramic rudder angle indicator	1
14	RAI 3300 AC/DC Power supply	1
15	CP-375 control and mode selection panel membrane style, digital 3 inch x 6 inch, 7 buttons	2
16	CP-600 control and mode selection panel membrane style, digital 3 inch x 6 inch, 7 buttons maximum	1
17	Change Over Panel	1
18	RFU 2000 rudder angle feedback unit	2
19	ESJB-1 emergency steering junction box	1

20	High Flow Valve Control Junction Box	1
21	Steering Console Assembly	1
22	Sperry Navpilot 4000 Autopilot System	1
23	MSA (75HP @ 575 V), PLC	2
24	MSA 300 (1-10HP @ 575V), PLC	1
25	AP 600 motor starter & alarm panel, membrane style, c/w start/stop function, 3 inch x 6 inch	3
26	AP 375 alarm panel, membrane style, 3 inch x 3 ¾ inch	3
27	Technical Manual	4

22.2.3.2 **Cable Schedule (Contractor Supply)**

Cable #	AWG	# Conductors	Shielded	Cable Length/Locations
12D	18	6	Yes	SWE
12D1	18	3	Yes	5m (within bridge center console)
12D2	18	3	Yes	5m (within bridge center console)
14	16	3	No	5m (within steering compartment)
14A	18	6	No	SWE
14A1	18	3	No	5m (within bridge center console)
14A2	18	3	No	5m (within bridge center console)
14B	18	6	No	SWE
14B1	18	3	No	25m (center console to port wing)
14B2	18	3	No	25m (center console to port wing)
14C	18	6	No	SWE
14C1	18	3	No	25m (center console to stbd wing)
14C2	18	3	No	25m (center console to stbd wing)
16PA	14	5	Yes	5m (within steering compartment)
16PB	14	3	Yes	5m (within steering compartment)
16SA	14	5	Yes	5m (within steering compartment)
16SB	14	3	Yes	5m (within steering compartment)
16R	14	2	Yes	5m (within steering compartment)
19PA	18	8	Yes	5m (within bridge center console)
19PB	20	11	Yes	5m (within bridge center console)
19SA	18	8	Yes	5m (within bridge center console)
19SB	20	11	Yes	5m (within bridge center console)
21A	16	4	Yes	125m (steering compartment to bridge steering stand)
21B	16	4	Yes	8m (within steering compartment)
23A	18	5	Yes	1m (within bridge steering stand)
23B	16	5	Yes	25m (port wing to bridge steering stand)
23C	16	5	Yes	25m (stbd wing to bridge steering stand)
24A	18	6	Yes	1m (within bridge steering stand)
24B	18	3	Yes	25m (port wing to bridge steering stand)
24C	18	3	Yes	25m (stbd wing to bridge steering

				stand)
26	16	2	Yes	From ships 24Vdc Supply (length depends on where the source is)
31	18	4	Yes	1m (within bridge steering stand)
33	18	5	Yes	1m (within bridge steering stand)
36	16	2	Yes	10m (bridge steering stand to overhead RAI power supply
41	16	3	Yes	125m (steering compartment to bridge overhead RAI)
43	16	2	Yes	2m (RAI power supply to RAI)
46	16	2	Yes	Existing Cable but should be shielded (EL102-9)
52P	22	2 (1pair STP)	Yes	125m (steering compartment to bridge center console)
52S	22	2 (1pair STP)	Yes	125m (steering compartment to bridge center console)
53	16	2	No	1m (within bridge steering stand)
56	16	2	No	Existing Cable (L113-12)
61P1	18	7	Yes	125m (steering compartment to bridge steering stand)
61P2	20	16	Yes	125m (steering compartment to bridge steering stand)
61S1	18	7	Yes	125m (steering compartment to bridge steering stand)
61S2	20	16	Yes	125m (steering compartment to bridge steering stand)
71S	18	3	Yes	60m (steering compartment to MCR alarm monitoring system)
1PA	18	4 (2 pair STP)	Yes	125m (steering compartment to bridge center console near stand)
1PB	18	4 (2 pair STP)	Yes	10m (within steering compartment)
1SA	18	4 (2 pair STP)	Yes	125m (steering compartment to bridge center console near stand)
1SB	18	4 (2 pair STP)	Yes	10m (within steering compartment)
2P1	18	4 (2 pair STP)	Yes	5m (within bridge steering console)
2P2	18	4 (s pair STP)	Yes	5m (within bridge steering console)
2S1	18	4 (2 pair STP)	Yes	5m (within bridge steering console)
2S2	18	4 (2 pair STP)	Yes	5m (within bridge steering console)
5PA	14	5	Yes	125m (steering compartment to bridge center fwd console). This cable carries 24Vdc from steering compartment and shall be increased from 14Awg to 10 AWG due to cable length)
5PB	14	4	No	10m (within steering compartment)
5PC	14	4	No	10m (within steering compartment)
5SA	14	5	Yes	125m (steering compartment to bridge center fwd console). This

				cable carries 24Vdc from steering compartment and shall be increased from 14Awg to 10 AWG due to cable length)
5SB	14	4	No	10m (within steering compartment)
5SC	14	4	No	10m (within steering compartment)
5R	16	3	Yes	5m (within steering compartment)
6P	14	4	Yes	125m (steering compartment to bridge center fwd console). This cable carries 24Vdc from steering compartment and shall be increased from 14Awg to 10 AWG due to cable length)
6S	14	4	Yes	125m (steering compartment to bridge center fwd console). This cable carries 24Vdc from steering compartment and shall be increased from 14Awg to 10 AWG due to cable length)
8PA	16	4 (2 pair individually STP)	Yes	10m (within steering compartment)
8PB	18	4	Yes	10m (within steering compartment)
8SA	16	4 (2 pair individually STP)	Yes	10m (within steering compartment)
8SB	18	4	Yes	10m (within steering compartment)
8R	16	3	Yes	10m (within steering compartment)
9	16	4	Yes	10m (within steering compartment)
9A1	18	8	Yes	5m (within bridge fwd center console and steering stand)
9A2	18	8	Yes	5m (within bridge fwd center console and steering stand)
9PA1	18	8	Yes	5m (within bridge fwd center console and steering stand)
9PA2	20	11	Yes	5m (within bridge fwd center console and steering stand)
9PA3	18	8	Yes	125m (steering compartment to bridge center fwd console)
9PA4	18	8	Yes	5m (within bridge fwd center console and steering stand)
9PB1	20	5	Yes	25m (bridge fwd center console to port wing)
9PB2	20	8	Yes	25m (bridge fwd center console to port wing)
9PC1	20	5	Yes	25m (bridge fwd center console to stbd wing)
9PC2	20	8	Yes	25m (bridge fwd center console to

				stbd wing)
9SA1	18	8	Yes	5m (within bridge fwd center console and steering stand)
9SA2	20	11	Yes	5m (within bridge fwd center console and steering stand)
9SA3	18	8	Yes	125m (steering compartment to bridge center fwd console)
9SA4	18	8	Yes	5m (within bridge fwd center console and steering stand)
9SB1	20	5	Yes	25m (bridge fwd center console to port wing)
9SB2	20	8	Yes	25m (bridge fwd center console to port wing)
9SC1	20	5	Yes	25m (bridge fwd center console to stbd wing)
9SC2	20	8	Yes	25m (bridge fwd center console to stbd wing)
10P	18	6	Yes	5m (within bridge fwd center console)
10S	18	6	Yes	5m (within bridge fwd center console)
11A	16	2	Yes	5m (within bridge fwd center console)
11B	18	4 (2 Pair STP)	Yes	5m (within bridge fwd center console)
11C	16	2	Yes	3m (24Vdc for Autopilot SCU use EP101-9 via 24Vdc power supply)
12A	18	8	Yes	1m (within steering stand)
12A1	18	4	Yes	5m (within bridge fwd console)
12A2	18	4	Yes	5m (within bridge fwd console)
12B	18	6	Yes	SWE
12B1	18	3	Yes	25m (bridge fwd steering stand to port wing)
12B2	18	3	Yes	25m (bridge fwd steering stand to port wing)
12C	18	6	Yes	SWE
12C1	18	3	Yes	25m (bridge fwd steering stand to stbd wing)
12C2	18	3	Yes	25m (bridge fwd steering stand to stbd wing)
61PA	18	7	No	125m (steering compartment to bridge steering stand)
61PB	20	16	No	125m (steering compartment to bridge steering stand)
61SA	18	7	No	125m (steering compartment to bridge steering stand)
61SB	20	16	No	125m (steering compartment to

				bridge steering stand)
64P	16	2	No	Auxiliary 24Vdc supply from emergency switchboard (TBD)
64S	16	2	No	Auxiliary 24Vdc supply from emergency switchboard (TBD)
64R	16	2	No	Auxiliary 24Vdc supply from emergency switchboard (TBD)
65P	18	3	No	10m (within steering compartment)
65S	18	3	No	10m (within steering compartment)
65R	18	3	No	10m (within steering compartment)
68PA	-	4	No	Existing Cable currently in transfer switch
68PB	-	4	No	Existing Cable conductors to be confirmed
68SA	-	4	No	Existing Cable currently in transfer switch
68SB	-	4	No	Existing Cable conductors to be confirmed
68RA	-	4	No	Existing Cable conductors to be confirmed
68RB	-	4	No	Existing cable conductors to be confirmed
69P	20	21	No	60m (steering compartment to MCR)
69S	20	21	No	60m (steering compartment to MCR)
69R	20	21	No	60m (steering compartment to MCR)
70P	18	2	No	Optional for engineers delayed alarm (emergency)
70S	18	2	No	Optional for engineers delayed alarm Unit 1
70R	18	2	No	Optional for engineers delayed alarm Unit 2
71A	16	4	No	10m (within steering compartment)
71B	16	4	No	10m (within steering compartment)
85P	18	4	No	5m (within steering compartment)
85S	18	4	No	5m (within steering compartment)
87P	18	4	No	10m (within steering compartment)
87S	18	4	No	10m (within steering compartment)
90P	18	8	No	60m (steering compartment to MCR) alarm monitoring “optional usage”
90S	18	8	No	60m (steering compartment to MCR) alarm monitoring “optional usage”

22.2.4 Standards

22.2.4.1 Fleet Safety and Security Manual (DFO / 5737)

22.2.4.2 TP 127 – Ship's Electrical Standard

22.2.4.3 IEEE 45:2002 – Recommended Practice for Electrical Installation on Ship's

22.2.4.4 Society for Protective Coatings (SSPC) Standards

22.2.5 Regulations

22.2.3.1 Canada Shipping Act 2001- Marine Machinery Regulations.

22.2.6 Quality Assurance Standards

22.2.4.1 As per the Contractors Quality Assurance Program.

22.3 Technical

22.3.1 General

22.3.1 The Contractor shall arrange for a Jastram Engineering Field Service Representative (FSR) to oversee the installation of the S4-700-1-35 Steering System during the installation, commissioning, and sea trials. Contact information for the FSR is:

Tim O'Connor
East Coast Hydraulics
9 Sagona Avenue
Mount Pearl, Newfoundland
Telephone: 709 747 2121
Email: toconnor@eastcoasthydraulics.ca

22.3.2 The Contractor shall be responsible to arrange for TCMS attendance in order to obtain a survey credit when completing this specification.
The Contractor is responsible for the identification of interference items, their removal, storage, and refitting to vessel.

22.3.3 Contractor shall supply all equipment, enclosures, ventilation, staging, chain falls, crane usage, slings, and shackles necessary to perform the work. All lifting equipment shall be appropriate for expected duties, and be accompanied by current certification indicating, or be permanently marked as being of an adequate safe working load for the expected duties. Any brackets or other welded attachments required in the performance of this specification shall be welded into lace by CWB certified welders certified to welding standard W47.1, Div.1 ,all Hydraulic work to carried out by Certified Hydraulic Technicians, and any Electrical work to be carried out by Certified Electrical Technicians.

22.3.4 Prior to any hot work taking place the Contractor shall ensure that the area of work and all equipment, wiring, transits, etc. have been sufficiently protected from any

sparks or metal filings. The Contractor shall also ensure that the area of work, the system, and any adjacent space is certified gas free and suitable for work as per the preamble.

22.3.5 The Contractor shall be responsible to ensure that all areas have been thoroughly cleaned and free of any debris resulting from the performance of this specification item.

22.3.6 The Contractor shall include for all temporary and permanent removals for the completion of this specification item. All permanent removals are to be disposed of by the Contractor unless otherwise specified by the Owner's Representative.

22.3.7 The Contractor shall remove weld spatter, smooth weld seams and sharp edges, and remove grease, smoke, and soot marks as per SSPC-SP1. All welds shall be power tool cleaned to SSPC-SP3.

22.3.8 The Contractor shall recoat all heat affected and new steel with two coats of Amercoat Red Oxide Primer followed by two topcoats of Amercoat 5450 of the appropriate color on all surfaces for a final DFT of 3.5 mils. All coatings shall be Contractor supplied.

22.3.9 The Contractor shall provide all WHMIS data sheets for all chemicals, coatings, solvents, etc. which are being used during the course of this specification item in pdf format prior to use onboard the vessel. All containers of such are to be removed from the work site at the end of each work day.

22.3.10 The Contractor shall ensure that all identified piping isolations for the steering system are closed and are secured using the established lock-out / tagout system as outlined in the preamble.

22.3.11 The Contractor shall ensure that all identified electrical supplies for the system have been isolated and secured using the established lockout / tagout system as outlined in the preamble.

22.3.12 Electrical Isolations are as follows:

- Steering System Power Failure Alarm
- Steering Helm Autopilot
- Steering Gear Motor (Port)
- Steering Gear Motor (Starboard)
- Emergency Steering Gear Motor

22.3.13 The Contractor shall be responsible to drain the necessary hydraulic oil from the system to permit the work to be carried out on the system as well as replenish the oil in the system that has been lost during this work. Oil replenishment shall be of the same type as that already in use and shall be filtered through a portable filtration unit with a 3 micron rating prior to being admitted to the system.

22.3.14 The Contractor shall work in conjunction with the Coast Guard Electronics Technician / Chief Engineer / First Officer to oversee the installation of the new steering system to ensure compliance with the Coast Guard Standards and all work to be carried out to the Chief Engineers satisfaction. Contractor to follow the Jastram Installation and Service Manual for the installation.

22.3.15 Included drawings are provisional and for guidance only, actual final drawings to be provided by FSR at time of work.

22.3.16 Drawings including all connections and placement of components and equipment to be approved by Chief Engineer and FSR before any work is to begin.

22.3.17 The Contractor shall be responsible to supply all piping, tubing, fittings, and hoses required for the installation of the steering gear with the Owner supplied parts, black iron pipe is not to be used. All new flexible lines are to be pressure tested and cleaned to a NAS 6 Standard, all pressure testing and cleanliness to be complete with certification stating the 1.5 X's Working Pressure test and the NAS 6 Cleanliness. All new hard lines to be cleaned to a NAS 6 level and reference to the procedure and results to be supplied within a signed certificate produced by the Jastram approved hydraulic sub-contractor . .

22.3.18 All associated wiring is to be removed unless approved to be reused after testing in accordance to the Owner, and then only if agreement with the FSR and ensuring all required Standards are still being met.

Cabling To be Removed						
STEERING FLAT						
FROM	TO	Cable Label	# of C	AWG	Shielding	Length (m)
Port #1 Solenoid	JB 7	LP-7	3	14	Bronze Armour	
Port #1 RRB	JB 3	RAT-1	5	14	Bronze Armour	
Port #1 RRB	JB 5	LP-5	4	14	Bronze Armour	
JB 7	Wagner Isolation Switch	LP-3	3	14	Bronze Armour	
Port #1 RRB	P/O JB 1	LP-1	3	14	Bronze Armour	
STBD #2 Solenoid	JB 6	LP-8	3	14	Bronze Armour	
STBD #2 RRB	JB 4	LP-6	4	14	Bronze Armour	
STBD #2 RRB	P/O JB 1	LP-2	3	14	Bronze Armour	
JB 6	Wagner Isolation Switch	LP-4	3	14	Bronze Armour	
Emergency Pump Starter Box	Wagner Isolation Switch	LP-28	3	14	Bronze Armour	
Emergency Pump & Solenoid	Wagner Isolation Switch	LP-10	3	14	Bronze Armour	
Wagner Isolation Switch	Sperry Selector Switch	LP-38	3	14	Bronze Armour	

Wagner Isolation Switch	Sperry Selector Switch	LP-37	3	14	Bronze Armour	
Wagner Isolation Switch	JB 3	RA1-1	5	14	Bronze Armour	
STBD #2 Motor Starter Box	Sperry Selector Switch	LP-32	3	14	Bronze Armour	
PORT #1 Motor Starter Box	Sperry Selector Switch	LP-31	3	14	Bronze Armour	
STBD #2 Motor Starter Box	24 VDC Power Supply	??	3	14	Bronze Armour	
PORT #1 Motor Starter Box	24 VDC Power Supply	LP-29	3	14	Bronze Armour	
24 VDC Power Supply	Sperry Selector Switch	??	3	14	Bronze Armour	
24 VDC Power Supply	Sperry Selector Switch	LP-33	3	14	Bronze Armour	
Sperry Selector Switch	JB 3	??	3	14	Bronze Armour	
Sperry Selector Switch	JB 2	?	3	14	Bronze Armour	
Sperry Selector Switch	JB 5	?	3	14	Bronze Armour	

Cabling to be removed						
STEERING FLAT -- BRIDGE						
FROM	**TO**	**Cable Label**	**# of C**	**AWG**	**Shielding**	**Length (m)**
P/O JB 1	Electronic Unit System #1	LP-1	3	14	Bronze Armour	~120
Sperry Selector Switch	JB 4	LP-35	3	14	Bronze Armour	~120
Sperry Selector Switch – JB 5	Electronic Unit System #2	LP-12	3	14	Bronze Armour	~120
Sperry Selector Switch – JB 2	JB 8	LP-36	3	14	Bronze Armour	~120
JB 3	JB 9	SG-11	8	14	Bronze Armour	~120
P/O JB 1	Electronic Unit System #2	LP-2	3	14	Bronze Armour	~120

Cabling to be Removed						
CRAWL SPACE -- BRIDGE						
FROM	**TO**	**Cable Label**	**# of C**	**AWG**	**Shielding**	**Length (m)**
JB 9	Port RAI TB32	LP-13	5	14	Bronze Armour	

JB 4	Electronic Unit System #1	??	3	14	Bronze Armour	
JB 9	Electronic Unit System #1	SG-11A	3	14	Bronze Armour	
JB 9	STBD RAI	LP-15	5	14	Bronze Armour	
JB 9	Center RAI	LP-46	5	14	Bronze Armour	
JB 9	3 Face RAI (Overhead)	LP-45	5	14	Bronze Armour	
JB 9	Power Conditioner	LP-41	3	14	Bronze Armour	
Power Conditioner	Electronic Unit System #1	LP-43	3	14	Bronze Armour	
JB 8	Electronic Unit System #2	LP-42	3	14	Bronze Armour	
JB 8	Power Conditioner	SG-12A	3	14	Bronze Armour	
Power Conditioner	Electronic Unit System #2	LP-44	3	14	Bronze Armour	

Cabling to be Removed						
BRIDGE						
FROM	**TO**	**Cable Label**	**# of C**	**AWG**	**Shielding**	**Length (m)**
Steering Stand	Port Wing Console (NFU)	LP-17	6	14	Bronze Armour	~ 20
Steering Stand	Port Wing Console (FFU)	LP-19	8	14	Bronze Armour	~20
Steering Stand	STBD Wing Console (NFU)	LP-21	6	14	Bronze Armour	~20
Steering Stand	STBD Wing Console (FFU)	LP-23	8	14	Bronze Armour	~20

Cabling to be Removed						
PORT SYSTEM SEERING ALARMS						
FROM	**TO**	**Cable Label**	**# of C**	**AWG**	**Shielding**	**Length (m)**
Port Level Switch	Port Steering Gear Starter Box	SG-1	2	14	Bronze Armour	
Port Steering Gear Starter Box	Engine Room Console (MCR)	SG-3	6	14	Bronze Armour	
Port Steering Gear Starter Box	Steering Stand (W.H. Bridge)	SG-11	8	14	Bronze Armour	~120
Port Steering Gear	W.H. Center Console	SG-13	10	14	Bronze Armour	~120

Starter Box	(Bridge)					
Engine Room Console (MCR)	W.H. Center Console (Bridge)	SG-5	6	14	Bronze Armour	
Port Steering Gear Starter Box	Engine Room Console (MCR)	SG-15	4	14	Bronze Armour	
Port Steering Gear Starter Box	Alarm & Monitoring System	EA-LU7-JB7/20	6	14	Bronze Armour	
Port Steering Gear Starter Box	STBD Steering Gear Starter Box	EL-101-6	2	14	Bronze Armour	
W.H. Center Console (Bridge)	Port Wing Console (Bridge)	SG-7	2	14	Bronze Armour	~20
W.H. Center Console (Bridge)	Port Wing Console (Bridge)	SG-8	2	14	Bronze Armour	~20
W.H. Center Console (Bridge)	Port Wing Console (Bridge)	EP-101-9-DC1	2	14	Bronze Armour	~20

Cabling to be Removed						
STBD SYSTEM SEERING ALARMS						
FROM	**TO**	**Cable Label**	**# of C**	**AWG**	**Shielding**	**Length (m)**
STBD Level Switch	STBD Steering Gear Starter Box	SG-2	2	14	Bronze Armour	
STBD Steering Gear Starter Box	Engine Room Console (MCR)	SG-4	6	14	Bronze Armour	
STBD Steering Gear Starter Box	Engine Room Console (MCR)	SG-16	4	14	Bronze Armour	
STBD Steering Gear Starter Box	W.H. Steering Stand (Bridge)	SG-14	10	14	Bronze Armour	~120
Engine Room Console (MCR)	W.H. Center Console (Bridge)	SG-6	6	14	Bronze Armour	
STBD Steering Gear Starter Box	Alarm & Monitoring System	EA-LU7-JB7/23	6	14	Bronze Armour	
STBD Steering Gear Starter Box	120 VAC Supply			14	Bronze Armour	
W.H. Center Console (Bridge)	STBD Wing Console (Bridge)	SG-9	2	14	Bronze Armour	~20
W.H. Center Console (Bridge)	STBD Wing Console (Bridge)	SG-10	2	14	Bronze Armour	~20
W.H. Center Console (Bridge)	STBD Wing Console (Bridge)	EP-101-??-DC3	2	14	Bronze Armour	~20

22.3.19 All signal, line supply, and power cables to be routed away from each other as much as possible to minimize interference. Actual routing must be approved by the Chief Engineer and FSR.

22.3.20 The Contractor shall be responsible to supply and install new cabling for the installation of the steering gear and use 22.2.3.2 Cable Schedule for estimated lengths required. All Cabling shall be Marine Shipboard Type.

22.3.21 All wiring to be labeled as per the Jastram Installation Package during this installation

22.3.22 All cabling must follow existing cable trays throughout the vessel where fitted. Once installed, all cabling must be secured as per TP127.

22.3.23 The Contractor is responsible to modify existing consoles and panels where applicable, and is responsible for any reinforcement necessary. All modifications must return the console to a finish matching the panels or consoles previous state.

22.3.24 Steering Gear

22.3.25 Installation of the components for the steering gear must follow the Jastram Installation and Service Manuals

22.3.26 The Contractor will use Drawing DS-8-927 & Drawing C-8-904 B as a reference for the removal of the existing equipment that will not be reused. Contractor shall remove the local electrical equipment in steering compartment, except for the power changeover box. Contractor shall remove the existing Hydraulic Power Units (3). All of the existing hoses are to be removed and replaced as to fit the new steering system.

22.3.27 The Contractor will install the two (2) Hydraulic Power Units, 75 Horsepower, Proportional (Item 1 – Table 1) in the location of the existing HPU utilizing the existing base that the existing HPU is mounted. Shock absorbing pads Contractor supplied and utilized as per the existing configuration with the existing HPU.
The HPU will be in three (3) sections:

1. Reservoir with components
2. Base
3. Electric Motor / Pump Assembly

The Contractor will need to re-assemble the HPU as it is fitted into place, the FSR will direct the order and oversee this section of work. The HPU will then need to have the hose and steel lines reconnected from the electric motor / pump assembly to the reservoir.

22.3.28 The Contractor will install the one (1) new Emergency Hydraulic Power Unit, 10 Horsepower, ON/OFF (Item 2 – Table 1) in the location of the existing HPU utilizing the existing base that the existing HPU is mounted. Shock absorbing pads Contractor supplied and utilized as per the existing configuration with the existing HPU.
The HPU will be in three (3) sections:

1. Reservoir with components

2. Base
3. Electric Motor / Pump Assembly

The Contractor will need to re-assemble the HPU as it is fitted into place, the FSR will direct the order and oversee this section of work. The HPU will then need to have the hose and steel lines reconnected from the electric motor / pump assembly to the reservoir.

22.3.29 The Contractor will install the two (2) Digital Steering Controller (Item 3 – Table 1), in one of the following suitable spaces, firstly under the existing steering console, if not possible, in another approved location in the wheelhouse, and finally if no other location is possible, within the crawl space under the wheelhouse.

22.3.30 The Contractor will install the two (2) MCP 100-20 Mode Control Processor 2 x DSC (Item 4 Table 1), in one of the following suitable spaces, firstly under the existing steering console, if not possible, in another approved location in the wheelhouse, and finally if no other location is possible, within the crawl space under the wheelhouse

22.3.31 The Contractor will install the two of the three (2 of 3) JO100-2 jog switches (Item 7 – Table 1) in the starboard and port wing consoles (3 of 3 in center steering console) in the wheelhouse.

22.3.32 The Contractor will install the JO100-1 jog switch (Item 9 – Table 1) in the steering flat in a location assigned by C/E.

22.3.33 The Contractor will install the LC300-2 Yacht style lever controller, c/w s pot (Item 10 – Table 1) in the existing console in the wheelhouse.

22.3.34 The Contractor will install two of the three (2 of 3) RAI/ROI 380, rudder angle (order) indicator, 3.8 inch dial face, 24 VDC (Item 11 – Table 1) one in each of the starboard and port wing consoles. (3 of 3 in centre steering console) in the wheelhouse.

22.3.35 The Contractor will install the RAI 330, panoramic rudder angle indicator (Item 13 – Table 1) in the wheelhouse in a location approved by the C/E.

22.3.36 The Contractor will install the RAI 3300 AC/DC Power Supply (Item 14 – Table 1) in the wheelhouse in a location approved by the C/E.

22.3.37 The Contractor will install the CP-375 control and mode selection panel membrane style, digital 3 inch x 6 inch, 7 buttons (Item 15 – Table 1) in the port and starboard steering consoles in the wheelhouse.

22.3.38 The Contractor will install the two (2) RFU 2000 rudder angle feedback unit (Item 18 – Table 1) in the steering compartment in a location approved by the C/E.

22.3.39 The Contractor will install the ESJB-1 Emergency Steering Junction Box (Item 19 – Table 1) in the steering compartment in a location approved by the C/E.

22.3.30 The Contractor will install the High Flow Valve Control Junction Box (Item 20 – Table 1) in the steering compartment in a location approved by the C/E.

22.3.31 The Contractor will install the Steering Console Assembly (Item 21 – Table 1) in the wheelhouse.

22.3.32 The Contractor will install the Sperry Navpilot 4000 Autopilot System (Item 22 – Table 1) and its associated components in the wheelhouse.

22.3.33 The Contractor will install the three (3) Motor Starter / Alarm units (Item 23&24 Table 1) in the steering compartment as per Drawing D-751922 with the location approved by the C/E.

22.3.34 The Contractor is to make any modifications necessary to fit the components and is to ensure that any necessary reinforcement is used where applicable, and that all modifications follow existing profiles and are matched for finish.

22.4 Proof of Performance

22.4.1 Inspections

22.4.1.1 All work to be to the satisfaction of the Chief Engineer and attending TC/MS inspector. The Contractor in developing the plan for this work is to arrange for inspection hold points as required by attending TCMS Surveyor.

22.4.2 Testing/Trials

22.4.2.1 The commissioning of the steering and control system shall be done under the direction of the Jastram Engineering FSR & Jastram Field Engineer and in accordance with the manufacturer's practices.

22.4.2.2 Testing shall be completed on the system to confirm that all systems aspects are in compliance with the requirements of Transport Canada and the relevant Classification Society to ensure a Class approved installation. A report on all testing and findings must be submitted to the TA prior to the acceptance of this item.

22.4.2.3 Dock Trials shall be conducted to verify the operation of all new components in a variety of operational conditions including the follow up, non-follow up, single pump operation, dual pump operation, emergency operation and timed movements of the rudder in accordance with TCMS and Class Society requirements.

22.4.2.4 Sea Trials must be conducted for a period of four (4) hours to verify the operation of the new components and the integration of the system with the Autopilot control.

22.4.3 Certification

22.4.3.1 All original Class approval certificates for all system components must be submitted to the Owner prior to the acceptance of this item.

22.5 Deliverables

22.5.1 Documentation (Reports/Drawings/Manuals)

22.5.1.1 The Contractor shall provide the C/E with the typewritten report of the Contractors work in both electronic and hardcopy formats outlining the details of the inspection and any alterations / repairs made prior to the acceptance of this item.

22.5.1.2 The Contractor must ensure that all operation, maintenance, and installation manuals supplied with the new equipment are submitted to the Owner prior to the acceptance of this item.

22.5.2 Spares

22.5.2.1 The Contractor shall supply a recommended spares list complete with cost and lead time.

22.5.2.2 The Contractor will return any items Owner supplied with this item that have not been used prior to the acceptance of this item.

22.5.3 Training

22.5.3.1 The Contractor must provide one (1) training course of eight (8) hour duration to be held onboard after the final installation and commissioning of all new steering controls and governors. This training must be provided to applicable staff and be conducted by the OEM of the system. Training must encompass all items outlined in the operating and maintenance instructions as supplied by the OEM.

23.0 FOC'SLE BULWORK REPAIR

23.1 Identification (Refit)

23.1.1 The intent of this specification is to replace a damaged section of Foc'sle bulwark.

23.1.2 The following item is to be done in conjunction with the following specifications

- Specification Item 15 Hull Coatings

23.2 References

23.2.1 Equipment Data

23.2.1.1 Steel being replaced is 6.5 mm grade A.

23.2.2 Drawings

Drawing Number	Description	Electronic Number
12-0016-01	Shell Expansion	

23.2.3 Regulations

23.2.3.1 CSA Hull Construction Regulations.

23.2.4 Standards

23.2.4.1 Applicable CWB Standard for ferrous metals.

23.2.5 Quality Assurance Standards

23.2.5.1 As per the Contractors Quality Assurance Program.

23.3 Technical

23.3.1 Contractor will be replacing the damaged steel on the port side of the Foc'sle bulwark forward.

23.3.2 Before completing any electrical work contractor shall contact the ship's electrical officer to ensure that systems are properly locked out and all lock out tag out procedures followed as per the Contractors Lock Out/Tag out procedures.

23.3.3 The electric socket on the stbd side of the Foc'sle bulkhead will be disconnected and the wire removed from the support clips and protected and secured away from the work area.

23.3.4 The talk back speaker shall be removed from the bulwark support, protected and secured away from the work area.

23.3.5 The ship's bow camera will be disconnected and removed by ship's crew. Wire to be disconnected from the clips and protected away from the work area.

23.3.6 Contractor is to remove the damaged bulwark plate from approx. 2 inches from the port frame to 2” from the centre line and from the upper bulb bar rail to the lower weld on the bow plating and from the centre line fairlead. Approximate size 55”X 38”.

23.3.7 Once the damaged plate has been removed the contractor shall straighten the bow plating to properly line up with the new plate.

23.3.8 The bulwark plating, where the plate has been removed, will have its edges dressed to allow for proper fitting and welding of the new plate.

23.3.9 New plate shall be cut to fit the opening in the bulwark. New plate shall be installed and welded, to the existing plating and fairlead as per approved welding procedure.

23.3.10 Upon completion of plate welding a new support plate for the talk back unit shall be installed. Contractor to install new wire clips for the talkback unit, Electrical socket and the ship’s camera wiring. Quote on installation of 15 clips.

23.3.11 Upon completion of plate work the disturbed areas and the new plate inboard shall be painted with two coats of Contractor supplied Amerlock 400 primer and two coats of contractor supplied Matchless 700. The hull side of the plate will be coated primed with one coat of Interprime 098 grey and one coat of Interprime 099 red. Top coat will be in conjunction with Above Water Coatings, specification item.

23.3.12 The talkback unit will be reinstalled on the new support bracket and its wires reinstalled in the new clips. The electrical socket shall be reconnected and its wires secured in the clips. The camera wires shall be secured in the new clips and left to be secured by the ship’s crew.

23.4 Proof of Performance

23.4.1 **Inspections**

23.4.1.1 All work to be to the satisfaction of the Chief Engineer and attending TC/MS inspector.

23.4.2 Testing/Trials

23.4.2.1 N/A.

23.4.3 Certification

23.4.3.1 Systems requiring statutory approval shall be tested and certified to Transport Canada Regulations.

23.5 Deliverables

23.5.1 Testing/Trials

23.5.1.1 N/A.

23.5.2 Spares

23.5.2.1 N/A.

23.5.3 Training

23.5.3.1 N/A.

24.0 INTERNAL COMMUNICATION SYSTEM

24.1 Identification (CI #150)

24.1.1 The intent of this specification is to remove the existing ships internal communications system in its entirety and replace with a new Contractor supplied Hose McCann, or equal with recommended spares. Please refer to paragraph 24.1.2.6.

24.1.2 This work shall be carried out in conjunction with the following:
54.0 Master Clock Replacement.

24.1.3 Contractor shall supply all materials and parts required to perform the specified work unless otherwise stated.

24.1.4 Contractor is responsible for the identification of interference items, their temporary removal, storage, and refitting to vessel. Representative interferences will be available for viewing, prior to the bidders conference.

24.2 References

24.2.1 Equipment Data

24.2.1.2 **Location**
All regularly occupied spaces will be affected by this installation.

Navigating Bridge Deck & Wheelhouse
Officers Deck
Flight/Boat & Forcastle Deck
Upper Deck
Main Deck
Lower Deck
Tank Top

24.2.1.3 Drawings

Drawing Number	Description	Electronic Number
13-0073-01	GA Navigation Bridge Deck and W/H	
13-0074-01	General Arrangement Officers Deck	
13-0075-01	General Arrangement Flight/Boat Deck	
13-0076-01	General Arrangement Upper Deck	
13-0077-01	General Arrangement Main Deck	
	General Arrangement Lower Deck	
	General Arrangement Tank Top	
33-0845-01	ICS Deck Plan Nav Deck & W/H	
33-0845-02	ICS Deck Plan Officers Deck	
33-0845-03	ICS Deck Plan Boat Deck Aft	

33-0845-04	ICS Deck Plan Focastle/Boat Deck	
33-0845-05	ICS Deck Plan Upper Deck Aft	
33-0845-06	ICS Deck Plan Main Deck Mid	
33-0845-07	ICS Deck Plan Upper Deck Fwd	
33-0845-08	ICS Deck Plan Main Deck Aft	
33-0845-09	ICS Deck Plan Main Deck Mid	
33-0845-10	ICS Deck Plan Main Deck Fwd	
33-0845-11	ICS Deck Plan Lower Deck Aft	
33-0845-12	ICS Deck Plan Lower Deck Fwd	
33-0845-13	ICS Deck Plan Tank Top Aft	
33-0845-14	ICS Deck Plan Tank Top Fwd	
65405517	ICS SX100	
65412301	Integrated Communication System BD	
8010-100-CCGHL	ICP GA layout	
	ICS Room Layout	

24.2.3 Regulations

24.2.3.1 Canada Shipping Act, 2001

24.2.4.2 Canadian Supplement to the SOLAS Convention TP15221E paragraph 3.7.1.1

24.2.4.3 SOLAS Chapter II-2 Part D Regulation 12.3

24.2.4.4 SOLAS Chapter III Part B Regulation 6.5.1

24.2.4.5 SOLAS Chapter III Part B Regulation 6.5.2

24.2.4.6 SOLAS Chapter III Part B Regulation 6.5.3

24.2.4.7 SOLAS Chapter II-1 Part D Regulation 43.2.4.1

24.2.4.8 SOLAS Chapter III Part B Regulation 6.5.44.2.3.1 Canada Shipping Act, 2001

24.2.4 Standards

24.2.4.1 Fleet Safety and Security Manual (DFO/5737)

24.2.4.2 TP127E – Ships Electrical Standards

24.2.4.3 IEEE 45:2002 – Recommended Practice for Electrical Installations on Ships

24.2.4.4 Specification for the Installation of Shipboard Electronic Equipment (70-000-000-EU-JA-001)

24.2.4.5 TCMS recognized, Classification Society Approval

24.2.4.6 Rules and Regulations for the Classification of Ships

24.2.4.7 All original Class approval certificates for all system components shall be submitted to the owner prior to acceptance of this item.

24.2.4.8 Standard Technical Architecture for Shipboard Computer Systems

24.2.5 Quality Assurance Standards

24.2.5.1 As per Contractors QA program.

24.3 Technical

24.3.1 Contractor shall remove and dispose of all cabling from the original United Marine ICS (PA/PBX) system. Contractor shall remove all components from the original United Marine ICS (PA/PBX) system and return to the crown as this will be used as spares for similar equipment in CCG fleet.
Contractor shall note that there are a total of 7 terminal/connection boxes (TB-1 to TB-7) total to also be removed as detailed in reference drawings.

24.3.2 Contractor shall supply and install a Type Approved Internal Communications System, as recognized by the following classification societies; (1) American Bureau of Shipping, (2) Bureau Veritas, (3) Det Norske Veritas, (4) Germanischer Lloyd, or (5) Lloyds Register. An Internet Protocol (IP) based End-to-End Digital or mixture of analog/digital Integrated Communications System (ICS) Public Address (PA) and PBX (VoIP) and audio Entertainment shall be provided.

24.3.3 Integrated Internal Communication System Requirements;
The system shall use only Shipboard Approved STP Cat6A copper or Cat7 according to manufacturer's recommendations, and Multi-Mode fiber optic cabling (if required by the manufacturer) and Marine shipboard type approved 16AWG Individual Shielded Twisted Pair cabling. IP devices shall be connected using RJ45 jacks (applicable for type cable) wired in accordance with TIA/EIA 568B specifications or hardwired as applicable, regardless of equipment type. Exterior connections/devices shall have an environmental rating of IP66 or better.

24.3.4 PBX shall be IP based. The PA system shall be designed so that the failure of one system does not affect operation of another system. A/B system configuration for redundancy shall be provided.

24.3.5 The main equipment rack(s) are to be shock mounted and contain thermostatically controlled cooling fans. The racks shall contain the Public Address system, standby Public Address system controller, VoIP PBX system and all equipment for end device (speakers, phones, strobes, etc.) connectivity. The racks shall be installed in the space of previously removed ECP racks 1 to 3. New equipment racks must fit in the space of the old ECP racks with clearance as recommended by manufacturer. See reference drawing for ICS room layout with dimensions.

24.3.6 The equipment racks(s) shall receive power from an emergency 115Vac power source as well as an essential 115Vac; racks shall contain automatic changeover facilities (switch) and include **marine approved UPS "with conditioning"** at each cabinet that will maintain system power for at least 30 minutes. This ensures a disturbance free and clean/conditioned source of power.

24.3.7 **Public Address (PA) Requirements:**

A marine grade Public Address (PA) system capable of multichannel paging shall be installed. The system shall be designed in accordance with all class societies (i.e. Lloyds Register).

- The PA system shall provide routine and emergency broadcast public address facilities
- The PA system shall include a loudspeaker installation.
- The PA system shall broadcast to all areas of the ship.
- The PA system shall be audible in all areas of the ship.
- The PA system shall provide the option to broadcast to selected areas (broadcast zones) of the ship.
- The PA system shall be clearly audible above the ambient noise in all spaces as prescribed in paragraphs **7.2.2.1** and **7.2.2.2** of the **International Life-Saving Appliances (LSA) code**.
- The PA system shall be audible over the loudest ambient noise level occurring during ice transiting, icebreaking or ramming.
- The PA system shall provide the following two options for creating PA messages (1) a handset with dedicated selection push-buttons and (2) specifically programmed telephone stations.
- The PA system shall be arranged into the following selectable groups (1) General Recreation (2) Cabin group (3) Deck Group (4) Engine Group (5) Workgroup (6) All Call, and (7) Emergency All Call.
- There shall be a separate dedicated selection push button (on PA master control panels) for each PA system broadcast zone.
- Each dedicated selection push-button shall be configured to broadcast PA messages to a separate broadcast zone on the ship.
- The PA system shall broadcast PA messages to the broadcast zones corresponding to the selected push-button.
- The telephone system access to the PA system broadcast zones shall be configurable.
- The PA system shall have a Control and Monitoring element that is accessible from a web browser running on a PC.
- The PA system shall have two separate and independent amplifiers
- The PA system shall have at least two loops that are separated throughout their length.
- The PA system shall be connected to both the ships emergency source of electrical power and to the main (essential) source of electrical power with built-in changeover facilities.
- The PA system shall automatically trigger a discrete alarm signal if either of the sources of electrical power (emergency or main) for the PA system fails.

- The PA system amplifiers shall be continuously rated for the maximum power they are required to deliver into the system for audio and for alarm tone signals.
- The PA system amplifiers and loudspeakers shall be selected and arranged to prevent feedback and other interference.
- The PA system shall have the facilities to mute the general alarm/fire alarm during PA announcement.
- The PA system shall be available throughout the accommodation areas, the services spaces, the control stations, the open decks, the muster station, the embarkation stations and the machinery spaces.
- The PA Loudspeakers shall be strategically located throughout the ship so that PA and Alarm messages are broadcast to and audible in all areas of the ship.
- The PA system shall have an emergency override function that is accessible from the PA master control panels.
- The emergency override function shall broadcast emergency messages over the PA system, including: the broadcast over any loudspeaker in the spaces concerned that is switched off, the broadcast over any loudspeaker in the spaces concerned for which the volume is turned down, and the broadcast over any loudspeaker that is being used for other purposes.
- The loudhailers shall be integrated with the PA system.
- The loudhailers shall be weather proof (Ingress Protection of IP67 or better) horn type loudspeaker 30Watts.
- The loudhailers shall be accessible from the PA master control panels.
- The PA system shall be interfaced to the entertainment system.
- The PA system shall allow the audio output from the entertainment system to be broadcast to configured PA broadcast zones.
- The PA system shall automatically mute the audio output from the entertainment system during PA transmissions.
- The broadcast of audio output from the entertainment system shall be automatically returned to normal service at the conclusion of any PA transmission.
- The PA system shall automatically mute the audio output from the entertainment system when the general alarm is activated.
- The PA system shall provide discrete signals to mute the entertainment distribution system.
- The PA system shall interface to the ships alarm monitoring system.

Equipment for public address shall be provided with Ingress Protection (IPxx) indicated as follows:

- Ceiling Loudspeaker, for cabins and common areas, (IP22 or better).
- Horn type loudspeaker for machinery spaces, (IP66 or better).
- Horn type loudspeaker for outside spaces, (IP66 or better).
- Loud speaker for outside spaces w/push button for talkback (IP67 or better).
- Loudhailer for bridge top, helicopter hanger, and Port/Starboard side of upper deck (IP67 or better) 115V/60Hz supply.
- Facilities built-in to mute Ships Recreational Equipment and General Alarm Bells Mute.

- Facilities built-in to mute fire system.
- Master station control

24.3.8 VoIP System Requirements

The system shall provide operator free dialing and communication for incoming and outgoing calls between all spaces identified.

System Features

- Self-contained unit
- Caller ID
- Programmable from Web Interface
- Call forwarding
- Call transfer
- Call park
- Voicemail
- 3-way conferencing
- Wake up system
- Exterior Communication Access – Programmable (Shoreline, Satellite, Cellular)
- Incoming call routing
- Public Address Interface
- Remote Diagnostics/Maintenance
- Night Bells

All IP telephones shall be able to dial all other telephones on board and access shore trunks and other external communication via programming (a list of who shall have access to what trunks will be provided by CCG Technical Authority during commissioning). IP telephones shall be suitable for marine use suitable for bulkhead or desk mount and be either drip-proof or waterproof type depending on location. In high noise areas, auxiliary visual signaling via rotating (blue) beacons shall be supplied and installed to indicate an incoming call.

- The user terminals shall provide access to the shore Plain old Telephone Service (POTS) when alongside.
- The access to the shore POTS (provided by the user terminals) shall be configurable.
- The user terminals shall provide access to the PA system broadcast groups (broadcast zones)
- The access to the PA broadcast zones shall be configurable.
- The user terminal shall be equipped with special marine handset retainers.
- The user terminals on the bridge shall have a call pick-up capability
- The user terminals on the bridge shall have a forward on busy capability to other user terminal on the bridge.
- A list of extension numbers shall be provided with each user terminal and configurable after the fact to match the existing ships telephone directory.

- The telephone system user terminals installed outside shall be waterproof with an ingress protection rating of IP66 or better and contain an audible or visual signal upon a call to the terminal.
- Telephone system user terminals installed outside may be installed inside a weatherproof cabinet with IP rating of IP66 or better.
- Telephone system user terminal installed in machinery spaces, mechanical spaces, and operational spaces shall include; a handset with option for headset, have IP44 or better, be flush or bulkhead mountable, and include a separate auxiliary visual signaling strobe blue lens light.
- The signaling strobe for a user terminal shall be turned on when a call is received (on the user terminal).
- The signaling strobe for a user terminal (turned on as a result of an incoming call) shall be turned off when; the call is answered or the call is terminated.
- The telephone system shall interface to the PA system.
- The telephone system shall interface to existing ships EnGenius wireless telephone system, need four (4) analog lines/extensions.
- The telephone system shall include (6) FXO analog trunk lines to shore POTS
- The telephone system trunk lines shall have lightning protection.
- The telephone system shall provide separate trunk connection interfaces with the cell.
- The telephone system shall interface to the Satellite phones.
- The telephone system shall provide access to the satellite terminal for facsimile capability.
- VoIP system shall be supplied with four (4) shoreline connection boxes (including 150ft. shoreline cable) each having four lines, and have the ability to access shorelines as applicable.
- The system shall be capable of interfacing with a fax machine on the vessel.

Equipment for PBX (VoIP) system shall be provided with Ingress Protection (IPxx) indicated as follows:

- IP telephone (wall or desk mount).
- RJ-45 outlet for telephone.
- IP telephone (for machinery/mechanical spaces), with headset jack, beacon, and headset (machinery/mechanical spaces) wall mounted, (IP44 or better).
- IP telephone (weatherproof) exterior.
- Connection to access shorelines (4 line with 150 ft. shoreline cable) 120Vac, 60Hz.
- IP interface (for Iridium, Sat, and Cell) 115Vac, 60Hz.
- IP interface (for fax machine) 115Vac, 60Hz.

24.3.9 Ships Recreational Entertainment Systems Requirements:

The ICS shall be capable of accepting four (4) line level audio inputs for Ship's Recreational Entertainment. Distribution of entertainment audio (i.e. music, recorded announcements, etc.) for cabins and offices shall be programmable via system configuration software. Control of audio source and

volume in accommodations shall be via local telephone. Entertainment audio shall be over-ridden and volume level selected for entertainment will be automatically bypassed in the event of an alarm or PA announcement.

24.3.10 **Wireless Telephone System Requirements:**
An IP based Wireless Telephone System with three portable units (minimum) shall be provided for the operation on the bridge. The system will operate in conjunction with the previously specified PBX. The base controller will connect to the PBX via Cat6A or Cat7 cable.

The system will consist of:

- IP VoIP base Unit.
- IP VoIP Portable Telephones (with chargers).

24.3.11 **Equipment Package**

24.3.12 Bidders are to certify that all of the requirements (Equipment, materials/cable, installation, design, drawings, cable type and layout, ICS deck and cable layout on ships general arrangement, component layout on Ships General Arrangement, junction boxes, enclosures, terminal blocks, and piping Requirements) shall be included within their bid.

24.3.13 **The Contractor must indicate the make and model with their bid package**.

24.3.14 The successful Contractor shall provide details (manufacturer subcomponent list, design installation drawings, component layout on ships general arrangement, Vendor furnished information: Installation Repair & Overhaul and Operations Manual) no later than 4 weeks after contract award for CCG review.

24.3.15 The Contractor shall arrange for an authorized field service representative (FSR) to conduct the set to work (Site Acceptance Testing) and commissioning of the ICS system. A testing procedure shall be obtained and followed as per manufacturer's practices.

24.3.16 The Contractor shall work in conjunction with a Coast Guard Electronics Technician to oversee the installation of the new ICS system to ensure compliance with the applicable Coast Guard standards and to determine the final installation location of additional components as supplied with the system. All terminations shall be completed by CCG Technical Authority as per manufacturer's specifications.

24.3.17 Prior to any hot work taking place, the contractor shall ensure that the area of work and all equipment, wiring, transits, etc. have been sufficiently protected from any sparks or metal filings.

24.3.18 Contractor shall ensure that all identified electrical supplies for the system have been isolated and secured using the established lock-out / tag-out system as outlined in the preamble.

24.3.19 All electronic components removed from the vessel resulting from the performance of this specification shall be returned to the Owner for disposal/reuse.

24.3.20 All cabling which has been deemed surplus to the installation of this system shall be removed from the vessel and disposed of at the Contractor's expense.

24.3.21 Contractor shall be responsible to ensure that all areas have been thoroughly cleaned and free of any debris resulting from the performance of this specification item.

24.3.22 Contractor shall remove a total of 207 speakers and any associated volume control knobs (136 Deck head Flush Mount complete with backing boxes and associated volume control knobs, 5 Loudhailers, 32 Submerge Proof talkback speakers, 36 horn type speakers, on the wheelhouse top, navigation deck, officers deck, flight/boat deck, upper deck, main deck, lower deck, and tank top). Removals of these speakers shall be complete with connecting cable back to originating locations as detailed in reference drawings (33-0845-01 – 33-0845-14) ICS Deck Plan Drawings.

24.3.23 Contractor shall install 263 new speakers (155 deck head flush/bulkhead, 5 loudhailers, 64 horn speakers (IP66 or better), and 39 exterior (IP67) speakers on the wheelhouse top, navigation deck, bridge deck, forecastle deck, upper deck, main deck, and hold) as detailed in reference drawings to be provided by manufacturer.

24.3.24 Contractor shall install 136 of the 155 flush mount speakers in the space vacated by the old speakers by flush mounting the new speakers using 12-1/2" x 12-1/2" x 1/16" thick sheet metal with rounded edges. This speaker will now occupy the larger space left behind by the speakers that were removed. The remaining 19 speakers shall be flush mounted in areas indicated in reference drawings to be obtained from manufacturer; deck head panels shall be cut to accommodate the extra speakers. Location of extra speakers in section below.

Location of Speakers

BRIDGE DECK & WHEELHOUSE TOP:

Install 16 new flush mount speakers in the following locations;

- 4 navigating bridge
- 1 Washroom room 409 in place of old
- 4 Hallways
- 2 Special Navigating Chart Room, room 404
- 2 Radio Room, room 405
- 2 Electronics Equipment Room, room 406
- 1 ICS Room, room 403

Install 4 new horn type speakers in the following locations;
- 1 Aux Generator Coolant Heatsink Room
- 2 Aux Generator Room
- 1 Funnel frame 80 centerline in place of old

Install 2 loud hailers (30W each) in place of old on wheelhouse top port and starboard

Install 4 new exterior (IP67) speakers in the following locations;
- Fr95 Port
- Fr 77 Starboard
- **Talkback** Speaker forward mast wheelhouse top frame 135 centerline in place of old
- Main mast aft facing wheelhouse top frame 118 in place of old

OFFICERS DECK:

Install 14 new flush mount speakers in the following locations;
- 1 First Officer Cabin room 378 in place of old
- 2 Chief Officer Day and Night Cabin rooms 381 & 380 in place of old
- 1 Senior Scientist room 383 in place of old
- 2 Commanding Officer Day and Night Cabin room 390 & 387 in place of old
- 1 Deck Office room 373 in place of old
- 1 Communications Officer cabin room 367 in place of old
- 1 Laundry room 365 in place of old
- 5 passageway in place of old

Install 5 new horn speakers in the following locations;
- 2 Emergency Generator Room
- 1 Halon Room
- 1 Static Inverter Room in place of old
- 1 Fan Room

Install 6 new exterior (IP67) speakers in the following locations;
- 1 speaker at Frame 68
- 1 **Talkback** Speaker near port FRC
- 2 **Talkback** Speakers near port and starboard lifeboat stations
- 2 Speakers port & starboard frame 121 in place of old speakers.

FLIGHT and BOAT DECK

Install 13 flush mount speakers in the following locations;
- 1 First Engineer Cabin room 339 in place of old
- 1 Helicopter Engineer Cabin room 341 in place of old
- 1 Helicopter Pilot Cabin room 343 in place of old
- 1 Official Cabin room 352 in place of old
- 1 Senior Official Cabin room 350 in place of old
- 2 Chief Engineer Day/Night cabin rooms 347 & 349 in place of old

- 1 Second Engineer cabin room 345 in place of old
- 5 in hallways in place of old

Install 16 new exterior (IP67) speakers in the following locations;
- 2 speakers at frame 30 port and starboard in place of old
- 2 **Talkback** speakers at frame 38 port and starboard in place of old
- 2 **Talkback** speakers at frame 42 port and starboard in place of old
- 2 Speakers at frame 80 port and starboard in place of old
- 2 **Talkback** speakers at frame 90 port and starboard in place of old
- 2 **Talkback** speakers at frame 120 port and starboard in place of old
- 2 Speakers at frame 199 port and starboard in place of old
- 1 **Talkback** speaker at frame 185 windlass control in place of old
- 1 **Talkback** speaker at frame 208 center line in place of old

Install 6 new horns in the following locations
- 2 in helicopter hanger **(to be hazardous/explosion proof speakers)**
- 1 in helicopter workshop
- 2 in AC Chiller Room
- 1 in fan compartment

UPPER DECK:

Install 45 new flush mount speakers in the following locations;

- 2 in officers lounge room 225 in place of old
- 2 in officers mess room 226 in place of old
- 1 in ward room 229in place of old
- 1 in Dispensary room 228 in place of old
- 1 in officers pantry room 231 in place of old
- 13 in passageways and stairwell
- 1 in washroom room 230 in place of old
- 2 in ships office room 242
- 1 in supply office 244 in place of old
- 1 in medical officer cabin room 260 in place of old
- 1 in ice observer cabin room 262 in place of old
- 1 in Junior Electrical Officers cabin room 264 in place of old
- 1 in Senior Electrical Officers cabin room 266 in place of old
- 1 in spare cabin room 268 in place of old
- 1 in spare cabin room 270 in place of old
- 1 in quarter master station port room 272 in place of old
- 2 in senior engineer day/night cabin rooms 274 & 276 in place of old
- 1 in spare cabin room 293 in place of old
- 1 in Electronics Officer Cabin in place of old
- 1 in quarter master station starboard room 290 in place of old
- 1 in logistics officer cabin room 287 in place of old
- 1 in bosun cabin room 285 in place of old
- 1 in room 283 (2 cadets) in place of old
- 1 in room 281 (2 cadets) in place of old
- 1 in room 279 (2 cadets) in place of old
- 1 in room 277 (2 cadets) in place of old
- 2 in engineering officer change room (room 251)
- 1 in engineers office room 249 in place of old

Install 13 new exterior (IP67) speakers in the following locations;
- 1 Speaker on centerline aft near multi angle fairlead in place of old
- 1 **Talkback** speaker at frame 0 in place of old.
- 2 **Talkback** speakers at frame 11 in place of old
- 2 Speakers at frame 58 port and starboard in place of old
- 2 Speakers at frame 100 port and starboard in place of old
- 2 Speakers at frame 140 port and starboard in place of old
- 2 **Talkback** speakers at frame 165 port and starboard in place of old
- 1 **Talkback** speaker near centerline in place of old near mooring winch

Install 8 new horn speakers in the following locations;
- 1 in salvage, diving, & towing equipment workshop room 221 in place of old
- 1 in fan room (room 222)
- 2 at frame 40 port and starboard in place of old
- 2 in engine casing
- 2 in bosuns store

MAIN DECK:

Install 66 new flush mount speakers in the following locations;
- 1 bulkhead speaker at frame 5 port in place of old
- 1 in room 100 steering gear storeroom in place of old
- 1 in crew change room (room 103)
- 1 bulkhead speaker at frame 29 port in place of old
- 1 in room 111 at frame 8 starboard side in place of old
- 1 at frame 32 centerline in place of old
- 1 bulkhead speaker in room 109 fruit & vegetable room in place of old
- 1 bulkhead speaker in room 110 cool dairy room in place of old
- 1 bulkhead speaker in room 115 cold room in place of old
- 1 bulkhead speaker in handling room in place of old
- 1 in potato store room in place of old
- 3 in room 117 crews cafeteria in place of old
- 3 in galley in place of old
- 1 in dry provisions store room 121 in place of old
- 1 in provisions store room 136 in place of old
- 1 in provisions store room 137 in place of old
- 1 in washroom frame 71 in place of old
- 1 in room 130 chief cook cabin in place of old
- 1 in room 131 second cook cabin in place of old
- 3 in room 134 crews lounge in place of old
- 1 in room 132 steward cabin in place of old
- 1 in room 133 steward cabin in place of old
- 1 in room 157 storekeeper cabin in place of old
- 1 in room 158 spare cabin in place of old
- 1 in room 159 leading seaman cabin in place of old
- 1 in room 160 leading seaman cabin in place of old
- 1 in room 161 leading seaman cabin in place of old
- 1 in room 162 leading seaman cabin in place of old
- 1 in room 163 seaman cabin in place of old

- 1 in room 164 seaman cabin in place of old
- 1 in room 165 seaman cabin in place of old
- 1 in room 166 seaman cabin in place of old
- 1 in room 167 oiler cabin in place of old
- 1 in room 168 oiler cabin in place of old
- 2 in room 152 change room in place of old
- 1 in room 151 electrical workshop in place of old
- 1 in room153 laundry room in place of old
- 1 in room 186 bonded store
- 1 in room 180 canteen in place of old
- 2 in room 183 gymnasium in place of old
- 1 in room 184 watch & change room in place of old
- 2 bulkhead speakers in room 188 Central Store Room
- 1 in room 190 oiler cabin in place of old
- 1 in room 191 oiler cabin in place of old
- 1 in room 192 oiler cabin in place of old
- 1 in room 193 E/R technician in place of old
- 1 in room 200 laundry in place of old
- 1 at frame 67 centerline in place of old
- 2 at frame 78 port and starboard hallway in place of old
- 2 at frame 100 port and starboard hallway in place of old
- 1 at frame 122 centerline in place of old
- 2 at frame 136 port and starboard in place of old
- 1 at frame 155 port passageway in place of old
- 1 at frame 170 in place of old
- 1 at 168 centerline in place of old

Install 12 new horn speakers in the following locations;

- 2 in steering gear compartment
- 2 in emergency re-supply area at frame 20 in place of old
- 1 in room 105 refrigeration cargo room in place of old
- 1 in room 139 incinerator room in place of old
- 1 in engine casing
- 1 in room 189 fan room
- 1 in room 203 carpenters shop in place of old
- 2 in room 207 air bubbler machinery compartment in place of old
- 1 in chain locker frame 200 centerline in place of old

LOWER DECK:

Install 16 new horn/flush speakers in the following locations;
- 2 at frame 45 port and starboard in place of old and facing the same way
- 1 at frame 62 near item 113 on general arrangement
- 1 at frame 77 near stairway in place of old
- 1 at frame 77 port in place of old
- 1 flush mount over workstation desk in ECR item 111 on general arrangement
- 2 at frame 83 port and starboard in place of old facing the same way
- 2 at frame 90 port and starboard in place of old facing the same way
- 2 at frame 113 port and starboard
- 1 in engineers workshop in place of old
- 1 in welding shop
- 1 in electrical workshop in place of old
- 1 in bow thruster compartment in place of old

TANK TOP:

Install 13 new speakers in the following locations;
- 1 at frame 30 centerline in place of old and facing the same way
- 2 at frame 60 port and starboard (this is to replace one at centerline frame 60)
- 2 at frame 63 port and starboard in place of old and facing the same way
- 2 at frame 88 port and starboard facing aft 45 degrees
- 2 at frame 90 port and starboard in place of old and facing the same way
- 2 at frame 126 port and starboard (this is to replace one at centerline frame 126)
- 2 at frame 110 port and starboard

24.3.24 Contractor shall install five (5) loudhailers in the space vacated by the old as indicated in reference drawings to be provided by manufacturer. The contractor shall be responsible for modifying the mounting as necessary to accommodate the new loudhailers.

24.3.25 Contractor shall install 63 horn type speakers. Some of these will be a direct replacement of the old and some will be in addition to the old. See reference drawings of original ICS deck layout, and drawings to be obtained from manufacturer.

24.3.26 Contractor shall remove 67 telephones complete with cable back to originating locations as detailed in reference drawings. Contractor shall also remove all associated dial telephone jacks complete with cable as shown in ICS deck plan reference drawings.

24.3.27 Contractor shall remove eight (8) auxiliary visual signaling devices (Blue Rotating Beacons) in the following locations (emergency generator room, helicopter hanger workshop, air bubbler machine compartment, steering gear compartment, motor room, auxiliary machine room, and main generator room, and bow thruster compartment) complete with signal cable as shown in reference drawings.

Electrical isolation for these signaling devices is TEP101-9. Electrical connection shall remain, as it will be used for connection to new Blue Beacons.

24.3.28 Contractor shall install nine (9) new rotating beacons (blue), eight (8) of these will replace the ones that were removed and will reuse the 115Vac from TEP101-9, and the remaining one (1) shall be junctioned from the nearest junction box from same circuit. These junction boxes are located on the ICS deck plan reference drawings attached.

24.3.29 Contractor shall remove four (4) existing IDCH-7200 control heads complete with cabling from the bridge forward and aft information consoles, engine control room, and ICS room, as detailed in reference drawings.

24.3.30 Contractor shall install four (4) new control stations with expansion complete with handsets in the space vacated by the old control stations. The control stations for these locations shall be installed using adapter plates with the control heads and handsets fitted in the adapting plates. These plates shall be of the same paint scheme as the location they are being installed.

24.3.31 Contractor shall install 105 new telephones (78 bulkhead IP phones, 17 ruggedized phones, 9 exterior watertight phones with associated tweeter horn (120Vac to be retained for new indicators), and 1 DECT portable base station with 3 portable handsets with charger) as indicated in original deck plan ICS reference drawings and those to be obtained from manufacturer.

24.3.32 Contractor shall install these telephones in the space vacated by the old telephones. The remaining 38 phones shall be installed as per the reference drawings obtained from manufacturer and as detailed in the section below.

Location of Telephones & Control Stations

BRIDGE DECK & WHEELHOUSE TOP:

Install 8 new phone/control stations in the following locations;
- 1 desk phone in room 403 ICS room
- 1 desk phone in room 404 special navigation chart room in place of old
- 1 desk phone in room 406 electronics equipment room in place of old
- 1 desk phone in room 405 radio room in place of old
- 1 desk phone on navigation bridge
- 1 DECT wireless base station with 3 handset and 3 chargers
- 2 master control stations in place of old control stations

OFFICERS DECK:

Install 11 new phones in the following locations;
- 1 rugged phone in Emergency Generator Room with Blue Rotating Light and Headset in place of old
- 1 rugged phone in static inverter room in place of old
- 1 desk phone in room 367 communications officer in place of old

- 1 desk phone in room 373 deck office in place of old
- 1 desk phone in room 378 first officer cabin in place of old
- 2 desk phones in rooms 380 & 381 chief officer day/night cabin in place of old
- 1 desk phone in room 385 senior scientist cabin in place of old
- 2 desk phones in rooms 390 & 387 commanding officer day/night cabin in place of old
- 1 desk phone in room 385 second officer cabin in place of old

FLIGHT and BOAT DECK

Install 11 new phones in the following locations;
- 1 desk phone in room 339 1st engineer cabin in place of old
- 1 desk phone in room 341 helicopter engineer cabin in place of old
- 1 desk phone in room 343 helicopter pilot cabin in place of old
- 1 desk phone in room 352 official cabin in place of old
- 1 desk phone in room 350 senior official cabin in place of old
- 2 desk phones in rooms 347 & 349 chief engineers day/night cabins in place of old
- 1 desk phone in room 345 2nd engineer cabin in place of old
- 2 exterior phones in water tight enclosure in place of old at frame 92 port and starboard with signaling at each station to use existing 115Vac
- 1 rugged phone in helicopter workshop with blue strobe in place of old

UPPER DECK

Install new 37 phones in the following locations;
- 1 rugged phone in bosun store in place of old
- 2 exterior phones in watertight enclosure in place of old at frame 165 port and starboard with a signaling device at each station to use existing 115Vac
- 2 watertight shoreline connection boxes at frame 134 port and starboard in place of old
- 1 desk phone in quartermaster station starboard
- 1 desk phone in electronics officer cabin in place of old
- 1 desk phone in spare cabin room 293 in place of old
- 2 desk phones in rooms 274 & 276 senior engineers day/night cabin in place of old
- 1 desk phone in quarter master station port room 272
- 1 desk phone in room 270 smoke room in place of old
- 1 desk phone in room 287 logistics officer cabin in place of old
- 1 desk phone in room 268 spare cabin in place of old
- 1 desk phone in room 285 bosun cabin in place of old
- 1 desk phone in room 251 engineering officer change room in place of old
- 1 desk phone in room 249 engineers office in place of old
- 1 desk phone in room 266 senior electrical officer cabin in place of old
- 1 desk phone in room 283 2 cadets cabin
- 1 desk phone in room 264 junior electrical officer cabin in place of old
- 1 desk phone in room 281 2 cadets cabin
- 1 desk phone in room 262 ice observer cabin in place of old
- 1 desk phone in room 279 2 cadets cabin

- 1 desk phone in room 260 medical officer cabin in place of old
- 1 desk phone in room 277 2 cadets cabin
- 1 desk phone in room 242 ships office in place of old
- 1 desk phone in room 244 public computer room in place of old
- 1 desk phone in officers pantry in place of old
- 1 desk phone in room 229 ward in place of old
- 1 desk phone in room 228 dispensary in place of old
- 1 desk phone in room 225 officers lounge in place of old
- 1 desk phone in room 226 officers dining room in place of old
- 2 watertight shoreline connection boxes at frame 17 port and starboard in place of old
- 2 exterior phones in watertight enclosure in place of old at frame 12 port and starboard with a signaling device at each station to use existing 115Vac
- 1 exterior phone in watertight enclosure in place of old at frame 1 port and with a signaling device at station to use existing 115Vac

MAIN DECK

Install 34 new phones in the following locations;

- 1 rugged phone in Air Bubbler Machinery Compartment with Blue Rotating Light and Headset in place of old
- 1 rugged phone in room 203 carpenters shop in place of old
- 1 rugged phone in room 209 stores in place of old
- 1 desk phone in room 200 laundry
- 1 desk phone in room 188 central store room in place of old
- 1 desk phone in room 193 engine room technician
- 1 desk phone in room 183 gymnasium in place of old
- 1 desk phone in room 192 oiler cabin
- 1 desk phone in room 191 oiler cabin
- 1 desk phone in room 190 oiler cabin
- 1 desk phone in room 152 change room
- 1 desk phone in room 151 electrical workshop
- 1 desk phone in room 162 leading seaman cabin
- 1 desk phone in room 161 leading seaman cabin
- 1 desk phone in room 159 leading seaman cabin
- 1 desk phone in room 158 spare cabin
- 1 desk phone in room 157 storekeeper cabin
- 1 desk phone in room 168 oiler cabin
- 1 desk phone in room 167 oiler cabin
- 1 desk phone in room 166 seaman cabin
- 1 desk phone in room 165 seaman cabin
- 1 desk phone in room 164 seaman cabin
- 1 desk phone in room 163 seaman cabin
- 1 desk phone in room 133 steward cabin
- 1 desk phone in room 132 steward cabin
- 1 desk phone in room 131 second cook cabin
- 1 desk phone in room 130 chief cook cabin
- 2 desk phones in room 134 crews lounge in place of old
- 2 desk phones in room 117 crew’s cafeteria in place of old
- 1 rugged phone in room 118 galley in place of old
- 1 desk phone in room 103 crew change room
- 1 rugged phone in Steering Gear Compartment with Blue Rotating Light and Headset in place of old

LOWER DECK

Install 4 new phones and 1 new control station in the following locations;
- 1 rugged phone in Bow thruster Compartment with Blue Rotating Light and Headset in place of old
- 1 rugged phone in electrical workshop in place of old
- 1 rugged phone in engineers workshop in place of old
- 1 desk phone in engine control room near computer workstation
- 1 master control station in engine control room in place of old on computer workstation desk

TANK TOP

Install 5 new phones in the following locations;
- 1 rugged phone in Motor Room frame 60 with Blue Rotating Light and Headset in place of old
- 1 rugged phone in Bow thruster Compartment with Blue Rotating Light and Headset in place of old
- 1 rugged phone in Auxiliary Machinery Room frame 70 with Blue Rotating Light and Headset
- 2 rugged phones in main generator room one at frame 90 center and one at frame 126 both with Blue Rotating Light and Headset in place of old

24.3.33 Contractor shall remove the Main Equipment PA control cabinets ECP #1, ECP #2, and ECP #3, complete with Telephone Exchange (EPBX) in the ICS room on Navigation Deck between frames 100 -107. Contractor shall completely remove all cabling associated with both cabinets. Contractor shall be responsible to isolate the AC mains prior to removal, EP101-4, EP101-5, and TEP-101-16. These circuits shall be retained and reused for the new system.

24.3.34 Contractor shall install a relay in the vicinity of the General Alarm System for connection of the ICS system to this panel for muting the General alarm during a PA announcement. Contractor shall retain cable # ICS-467 for connection to new equipment to mute general alarm and fire alarm during PA transmission. Contractor shall also retain cable # ICS-469 for connection to trunks (ships cell and sat comms).

24.3.35 Contractor shall install new equipment racks as provided by manufacturer, in the ICS Room. If the maximum cable length exceeds the allowable 100 meter limit for PoE the racks may need to be decentralized for IP telephones only. The racks shall be mounted to allow access to components inside. A **type approved marine UPS "with conditioning"** shall be mounted beneath each equipment rack and off the deck. Exact locations and mounting to be determined on site.

24.3.36 Contractor shall be aware that each cable run for IP telephones shall not exceed 100m as the system components are powered over Ethernet and this is the standard for PoE.

24.3.37 For the purpose of Deck and Bulkhead penetrations the contractor shall use existing where possible.

The contractor shall supply and install sixteen (16) S 4x1 Roxtec primed frames complete with 36 RM20 Roxtec modules per frame, one wedge kit galvanized per frame and six (6) stay plates per frame. Contractor may substitute RM20's with RM15's or any mixture of.

For the purpose of adjustments, the contractor shall include a unit cost for the supply and install for one (1) S 4x1 Roxtec primed frame complete with 36 RM20 Roxtec modules per frame, one wedge kit galvanized and stay plates per frame.

24.3.38 Contractor shall allow for the supply and install 200m (2 runs) of marine type approved fiber optic cable for the interconnection of equipment racks if they need to be decentralized, if they can be co-located there is no requirement for this cable. Fiber Cable if applicable shall be the Drake series cabling or as recommended by manufacturer.

The contractor shall supply and install three Almond 4 duplex port fiber drop boxes complete with 12 LCD (duplex) couplers to be mounted at the back of with each rack if applicable.

For the purpose of adjustment, the contractor shall include a unit cost for the supply and install for 10 meters of this type cable.

The contractor shall supply and install (8) 1m LC to SC fiber patch cords between the fiber drop boxes and the switches if applicable.

24.3.39 Contractor shall supply and install **15000m of Cat6A or better cable** (Category 6A Shipboard Marine Type Approved) according to manufacturer's recommendations for the connection IP phones, and other devices, and accessories as detailed in the manufacturer's reference drawings.

For the purpose of adjustments, the contractor shall include a unit cost for the supply and install for 10 meters of Cat6A as applicable.

24.3.40 Contractor shall allow for 105 Cat6A or better cable runs as applicable, cables from each telephone to equipment racks as outlined in the reference drawings once obtained from manufacturer.

24.3.41 Contractor shall allow for the supply and install of marine shipboard, 16 gauge shielded twisted pair cabling types (i.e. number of pairs per cable) to be obtained from manufacturer for the system to be installed. It shall be the contractor's responsibility to determine the cable routing.

24.3.42 For the IP desk telephones, the contractor shall supply and install eighty (80) RJ45 wall boxes for each desk phone installed in cabins and offices on the vessel, and in the space vacated by the old phones removed and in new locations as identified in

drawings to be provided. Cable runs behind bulkhead panels shall be suitably protected and secured. All desk phones shall be bulkhead mounted.

24.3.43 All end device cables shall be labelled with stamped metal tags affixed according to manufacturer's drawings to be provided at both ends of cable and on either side of each transit they pass through.

24.3.44 Contractor shall replace/refurbish all outside speaker/phone cable clips and mounting bases that are not suitable for further use. The contractor shall ensure the new Cat6A or better cable and 16AWG STP cable is properly secured from the exit of each outside gland to the termination point at each speaker. Spacing between these clips shall not exceed 300mm, if this is the case new stainless steel clips are to be added. Contractor shall give a unit cost for the supply and install of 10 stainless steel clips.

24.3.45 All electrical cabling, once installed, shall be labelled with stamped metal tags securely affixed to the cable at each end with the designation for each cable provided in the installation drawings or as per the respective electrical supply.

24.3.46 All cabling shall follow existing cable trays and transits throughout the vessel where fitted. Once installed, all cabling shall be secured as per TP127. Wireway deck plan drawings attached for reference.

24.3.47 Contractor shall supply and install 10 meters of 10/4 AWG marine shipboard cable for the purpose of connecting an additional supply to the main PA/PBX cabinets.

24.3.48 Contractor shall supply and install a new automatic changeover switch (ACOS) near PA/PBX Cabinet if not already supplied with equipment rack. This switch will be fed one circuit from 115Vac Panel TEP101-16 (40A) existing and from another spare 115Vac on the essential bus. The transfer switch shall have indication for normal and emergency power operation. Normal supply will be from essential bus and the Emergency Supply from emergency switchboard. The changeover switch shall have a contact on each input to sense a power failure on each supply circuit that can operate an "audible and visual" alarm to be integrated into the vessels alarm and monitoring system. The transfer switch shall be installed next to the new transformer. Transfer switch shall meet Lloyd's approval.

This shall meet regulation **18.3 Public Address System** of the (General Information for the Rules and Regulations for the Classification of Ships). The Automatic Changeover Switch shall meet Lloyd's approval.

24.3.49 Contractor shall supply and install 100 meters of 10/4 AWG marine shipboard cable for the connection of these components.

24.3.50 Contractor shall supply and install 100 meters of 14/3 AWG marine shipboard cable for the connection additional signaling devices.

24.3.51 For the purpose of adjustments, contractor shall include a unit cost for the supply and install for 10 meters of these type cable types.

24.3.52 Contractor shall supply and install a type approved **marine Uninterruptable Power Supply (UPS) "with conditioning"**, for each equipment rack used properly sized to meet maximum capacity of the system. UPS is to be installed in the vicinity of each equipment rack.

24.3.53 Contractor shall supply and install 100 meters of 14/3 AWG marine shipboard cable for any device requiring 115Vac if applicable.

24.3.54 For the purpose of adjustments, contractor shall include a unit cost for the supply and install for 10 meters of this type cable types.

24.3.55 The system shall be able to provide four (4) analog lines with 4 extensions for integration to the ships EnGenius multi-line cordless telephone system. The vessels engineering department uses this with four (4) handsets so they can be reached throughout the vessel.

24.3.56 The system shall be an A/B redundant system and shall provide the following discrete alarm outputs to be integrated to the ships alarm and monitoring system.

- Main/Emergency failure system A
- Main/Emergency failure system B
- UPS failure system A
- UPS system failure B
- PA system fault system A
- PA system fault system B
- Phone System fault

24.3.57 Contractor shall provide FRS to perform this integration. Contractor shall supply and install two marine shipboard cables (4x2x0.75mm^2) from equipment rack components to ships alarm and monitoring system.

24.4 Proof of Performance

24.4.1 Inspections

24.4.1.1 All work shall be subject to witness by Chief Engineer or his delegate and the attending surveyor.

24.4.2 Testing/Trials

24.4.2.1 The commissioning of the new ICS system shall be done under the direction of an approved FSR and in accordance with the manufacturers approved procedures.

24.4.2.2 Contractor shall include an allowance of $20,000 for the services of the FSR's for this specification item. This cost is to include per day, accommodations, meals, and transportation.

24.4.2.3 Testing shall be completed on the system to confirm that all system aspects are in accordance with the requirements of Transport Canada and the relevant Classification Society to ensure a class approved installation. A report on all

testing and findings shall be submitted to the Owner prior to the acceptance of this item.

24.4.2.4 Programming of the system shall be carried out by the FSR at time of installation.

24.4.2.5 Contractor shall follow the Standard Technical Architecture for Shipboard Computer Systems (section 5.2 Cable Testing Requirements) to perform tests and provide results as per Annex H and Annex I of this standard, on all new Cat5e and/or Cat6A and Fiber Optic Cabling

24.5 Deliverables

24.5.1 Documentation (Reports/Drawings/Manuals)

24.5.1.1 Contractor shall provide the Technical Authority with a typewritten report of the contractors work in both electronic and hardcopy formats outlining the details of the inspections and any alterations / repairs prior to the acceptance of this item.

24.5.1.2 As-built drawing package shall be provided. At minimum, this package shall include separate drawings for :
1. Device Locations (over-laid on the vessels General Arrangement, provided)
2. Cable run, Deck and Bulkhead Penetration details over-laid on the vessels General Arrangement, provided)
3. Block Diagram with Connection Details and electrical supply.
4. Regulatory & Statutory requirements. Three (3) paper copies ISO A2 size and one (1) electronic copy ACAD 2013.dwg format.
Manufacturer shall provide an itemized list with details and serial numbers for all replaceable items used in this install to CCG. This is required for CCG to be able to enter all items in AMS (Asset Management System)
As built Programming/Configuration File (Flash Drive of CD)

24.5.1.3 Contractor shall ensure that all operation, maintenance, and installation manuals supplied with the new equipment are submitted to the Owner prior to the acceptance of this item.

24.5.2 Spares

24.5.2.1 The list of recommended spares provided shall be returned to the owner prior to acceptance of this item.

24.5.2.2 Spares shall include 4 of each type speaker used in the system, 4 of each type phone used in the system as well as the manufacturers recommended list of spares.

24.5.3 Training

24.5.3.1 Contractor shall provide one (1) training course of eight (8) hour duration to be held onboard after the final installation and commissioning of all new system components. This training shall be provided to the ship's personnel involved in the

operation of the system (both crews) and to the CCG Technicians responsible for the maintenance on the system. The training shall be provided by the manufacturer's technical representative (FSR). Training shall encompass all items outlined in the operating and maintenance instructions as supplied by the manufacturer. This may have to be provided on completion of the Vessel Life Extension based on access to the vessel during VLE.

25.0 SIDELIGHT REPLACEMENT

25.1 Identification (CI #40)

25.1.1 The intent of this specification is to replace 10 sidelights with new contractor supplied units.

25.1.2 Replacement to be done in conjunction with the following spec items

- VLE CI #39 Asbestos Remediation
- VLE CI #27 Above Water Line Coatings.

25.2 References

25.2.1 Equipment Data

25.2.1.1 Original sidelights supplied by Pyramid Transit Products limited Montreal. Sidelights have a 350 mm clear viewing area and outside spigot diameter is 410 mm.

Cabin/Space	Occupant	Sidelights to be replaced
192	E/R Tech	1
193	E/R Tech	1
130	Chief Cook	1
131	Second Cook	1
Crew's Mess		3
132	Deck Hand	1
166		1
Gym		Fwd (1)

25.2.2 Drawings

Drawing Number	Description	Electronic Number
15-0212-01	Window and Sidelight Schedule	
15-0212-02	Windows and Sidelight Arrangement and Details	

25.2.3 Regulations

25.2.3.1 As per applicable TCMS regulations.

25.2.4 Standards

25.2.4.1 Contractor to provide an approved weld procedure for the sidelight replacement.

25.2.4.2 Fleet Safety and Security Manual DFO/5737.

25.2.5 Quality Assurance Standards

25.2.5.1 All work to be completed to the satisfaction of the Chief Engineer and attending TC/MS surveyor.

25.3 Technical

25.3.1 Contractor shall be replacing 10 sidelights in the locations as specified above. All sidelights, complete with deadlights, to be Contractor supply.

25.3.2 Contractor to remove all trim around the sidelight and all insulation shall be removed and discarded. The window box can be removed as required to gain access to the welds. Removed trim window boxes shall be saved and protected for reinstallation upon completion of installations. *Note there is asbestos in the fire stop spray on much of the insulation onboard, proper removal and disposal techniques to be followed.

25.3.3 Prior to any cutting or welding the accommodation spaces are to be properly protected against any damage.

25.3.4 The existing sidelights are to be removed from the ships side and the ship's hull is to be properly dressed for the new sidelight installation.

25.3.5 While the sidelights are removed contractor to ensure that the sidelight openings are made watertight to ensure no damage is done due to weather.

25.3.6 The new sidelights are to be fitted to the previous openings with 6mm of spigot on the outboard side. The sidelights shall be made flush to the ships side. The spigots shall be fillet welded on both sides of the sidelight for the complete circumference.

25.3.7 The sidelight in Cabin 132 is fitted with guard arranged to protect against damage from the Miranda Davit. A new guard is to be manufactured, as per the original, and installed in the new sidelight spigot.

25.3.8 Upon completion of all welding, new sidelights are to be hose tested and proven watertight to the satisfaction of the attending TC/MS inspector. All new welds and disturbed steel to be coated with two coats of contractor supplied primer.

25.3.9 The fitted deadlights shall be proven operational. The deadlight holdbacks shall be checked for position and adjusted as required to allow proper operation.

25.3.10 Upon completion of all testing, the areas around the sidelights shall be reinsulated as per original. The existing trim shall be reinstalled.

25.4 Proof of Performance

25.4.1 Inspections

25.4.1.1 All work to be to the satisfaction of the Chief Engineer and attending TC/MS inspector.

25.4.2 Testing/Trials

25.4.2.1 All welds are to be tested as required by the attending TCMS Surveyor.

25.4.2.2 Upon completion of all installations, all sidelights shall be hose tested and proven watertight.

25.5 Deliverables

25.5.1 Documentation (Reports/Drawings/Manuals)

25.5.1.1 Contractor shall supply a copy of the documentation utilized to order/purchase replacement sidelights, including, Supplier Details, Model Number, Lead Time, and cost.

25.5.2 Spares

25.5.2.1 N/A.

25.5.3 Training

25.5.3.1 N/A.

26.0 DEAD SHIP AIR COMPRESSOR

26.1 Identification (CI #113)

26.1.1 The intent of this item is to remove the existing dead ship air compressor module in its entirety and install a new Contractor supplied, class approved, dead ship air compressor module and obtain TCMS credit for the dead ship air compressor.

26.1.2 The Contractor shall arrange scheduling of TCMS surveyor(s) as required.

26.2 References

26.2.1 Equipment Data

26.2.1.1 Existing dead ship air compressor module is a Hamworthy 2SM10A 15 m^3/hr, 3000 kpa compressor, driven by a Hatz model NRE673 LHK diesel engine.

26.2.1.2 Located in the Emergency Generator Room on the Officer's Deck.

26.2.1.3 The Contractor shall supply a dead start air compressor module as per section 26.5.2. Available : Marine and Offshore Canada, (905) 688-4922.

26.2.2 Drawings

Drawing Number	Description	Electronic Number
13-0074-01	General Arrangement Officers Deck	
1110-16-0023-02	Seats for Unit 731 Zone 023 Emerg. Gen. Rm, Officers DK, Switchboard,Xformer,F.O. Tank Air Start Bottle, Dead Start Compressor	

26.2.3 Regulations

26.2.3.1 MOSH, and FSSM (Fleet Safety Manual).

26.2.3.2 TCMS Hull and Machinery Regs.

26.2.3.3 The Contractor shall arrange for TCMS inspection, approvals and sign off for vessel's Division III report.

26.2.4 Standards

26.2.4.1 Diesel and Compressor set shall have class approval.

26.2.5 Quality Assurance Standards

26.2.5.1 As per Contractor's Program.

26.3 Technical

26.3.1 Lockout/tag out the electrical and compressed air services.

26.3.2 The Contractor will use their own locks and tags but complete the ship's lockout/tag out register.

26.3.3 Endure PJSA (Pre Job Safety Assessment, FSM 10.A.7.4) is complete.

26.3.4 Prior to any hotwork ensure Hotwork Permit is in place (FSM 7.B.4).

26.3.5 Prior to removal of any insulation in the in the Emergency Generator Room or Chiller Room to facilitate hotwork the vessel's Asbestos Management Plan will be consulted in conjunction with the Chief Engineer. (FSM 7.A.10).

26.3.6 Drain and remove ashore the fuel from the diesel engine fuel tank. Fuel to be disposed of in accordance with provincial environmental regulations.

26.3.7 Disconnect the compressed air discharge and engine exhaust piping and electrical connections. The Existing exhaust blankets to be removed and set aside for reinstallation upon completion of work.

26.3.8 Unship the dead ship air compressor module and remove it to the vessel's Contractor arranged storage facility. The dead ship air compressor module is to be protected from the elements, mounted to a pallet and handled so as to prevent damage to the module.

26.3.9 The existing seat for the dead ship air compressor module is to be removed and the deck prepared to accept a new seat.

26.3.10 The Contractor is to supply a new seat to suit the new dead ship air compressor module.

26.3.11 Prior to mounting the seat the Contractor is to consult with the Chief Engineer or his delegate to decide upon location for seat to facilitate connection to existing air and exhaust piping as well as ergonomic considerations for manual start operation.

26.3.12 Catchall may have to be modified to accept seat and compressor module. Fit seat.

26.3.13 Apply one coat of contractor supplied primer to the new seat and any disturbed steel work.

26.3.14 Install the new dead ship air compressor module to the new seat.

26.3.15 Connect the discharge compressed air line to the compressor and diesel engine exhaust to the existing exhaust outlet. Contractor shall make provisions for vibration by utilizing suitable flexible lines between new module and existing rigidly mounted services.

26.3.16 Connect the electrical to the existing.

26.3.17 Fill the diesel engine fuel tank, compressor sump and engine sump/cooling systems with manufacturer approved fluids/fuel.

26.3.18 Contractor in the presence of the Chief Engineer or his delegate is commission the compressor module as per the manufacturer's instructions.

26.3.19 The Contractor will insulate the diesel engine exhaust piping and flanges to the bulkhead using existing asbestos free removable pads.

26.3.20 Following successful test operations the contractor shall arrange for TCMS attending surveyor inspection/testing as required.

26.4 Proof of Performance

26.4.1 Inspections

26.4.1.1 Hold for location of mounting bed.

26.4.1.2 Hold for witness of approved fluid filling.

26.4.2 Testing/Trials

26.4.2.1 Contractor in the presence of the Chief Engineer or his delegate shall commission the diesel/compressor module as per the manufacturer's instructions.

26.4.2.2 Upon completion of commissioning run, the Contractor shall drain compressed air reservoir and function test the module.

26.4.2.3 TCMS attending surveyor inspection/testing as required.

26.4.3 Certification

26.4.3.1 TCMS sign off.

26.5 Deliverables

26.5.1 Documentation (Reports/Drawings/Manuals)

26.5.1.1 Class Approval Documentation for module.

26.5.1.2 The Contractor shall provide the Chief Engineer with a completed copy of all Safety Management System forms and permits for this item.

26.5.1.3 The Contractor will provide written proof of TCMS survey credit for the installation.

26.5.1.4 The Contractor is to provide documentation denoting supplier contact information, recommended spares lead times and cost information, and invoice.

26.5.1.5 Dead Start Air Compressor Specifications:

- HATLAPA Emergency Air compressor Model L14 or equivalent.
- 2 stage air cooled compressor.
- 15 m^3/hr capacity, minimum.
- 30 bar working pressure, minimum.
- Diesel engine driven.
- Manual electric pushbutton start (12VDC) as well as the manual crank start. A charging system is not required.
- The dead start air compressor must come as an assembled unit on a bedplate ready for installation. The footprint and overall dimensions are important as the unit must fit in place of the original. The maximum overall size of the unit would be 36” x 36”.
- The diesel engine and air compressor must be current production models approved by the manufacturer for use as a dead start air compressor on ships.
- The dead start air compressor assembly must be entirely self-contained with the exception of the 12 VDC supply to the electric start.
- All manufacturers’ special maintenance tools are to be included for the compressor and diesel engine.
- All manufacturers recommended spare parts for 1 year of level one maintenance and for one complete overhaul/survey are to be included.

26.5.1.6 Original Copies of the Operators manual, Maintenance or Shop manual (intended for technicians performing overhaul), and parts manual including original manufacturers part numbers, description, quantities and exploded parts views are to be included. Two original copies of each manual in English.

26.5.1.7 Two copies of each of the above noted manuals in French if available.

26.5.2 Spares

26.5.2.1 All manufacturers recommended spare parts for 1 year of level one maintenance and for one complete overhaul/survey are to be included.

26.5.3 Training

26.5.3.1 N/A.

27.0 INTERNAL LIGHTING RENEWAL

27.1 Identification (CI #123)

27.1.1 The intent of this specification is to replace the metric fluorescent lighting fixtures in the accommodation spaces, as per attached list see Appendix "F", and the accommodation alleyways with Standard T8 fixtures.

27.1.2 The following specification item is to be completed in conjunction with the following spec items.

- VLE CI #39 Asbestos Remediation
- VLE CI #121 Galley Deckhead Panel renewal

27.2 References

27.2.1 Equipment Data

27.2.1.1 2 X 40 watt four foot fixtures (see attached list)

27.2.1.2 2 X 40 watt two foot fixtures (see attached list)

27.2.1.3 1 X 40 watt four foot fixtures (see attached list)

27.2.1.4 Lighting List Appendix "F".

27.2.2 Drawings

Drawing Number	Description	Electronic Number
35-0880-01	Lighting Fixture List	
33-0880-01 to -15	Lighting Deck Plan	

27.2.3 Regulations

27.2.3.1 As per applicable TCMS regulations.

27.2.3.2 All disposals are to be done in accordance with provincial environmental regulations.

27.2.4 Standards

27.2.4.1 Ship's Electrical Standards- TP127.

27.2.4.2 All lights are to be Marine Grade UL98A, accepting imperial measure T8 bulbs.

27.2.4.3 Fleet Safety and Security Manual DFO\5737.

27.2.5 Quality Assurance Standards

27.2.5.1 As per the Contractor's QA program.

27.3 Technical

27.3.1 Contractor to bid on installing owner supplied fixtures as per the attached list Appendix "F". Fixtures are similar in configuration to the present fixtures with the lights lens covering two sides of the fixture.

27.3.2 Contractor to supply all T-8 bulbs for the new fixtures installed in this specification. Contractor to bid on supplying 360, 4 foot bulbs and 250, 2 foot bulbs.

27.3.3 The fixtures for the cabin renewals will be owner supply.

27.3.4 Prior to commencing the fixture renewals the contractor shall consult with the ship's Electrical Officer to ensure all proper Lock out Tag out procedures are followed and all fixtures are locked out prior to removal.

27.3.5 In conjunction with the Asbestos Remediation, prior to the deck head panels being reinstalled, contractor shall disconnect the lighting fixtures in each of the spaces listed. The support frames shall be removed from the existing lights and reattached to the new light fixtures. The frame for the 2 foot fixtures will have to be taken apart and reassembled to fit the new fixtures. New contractor supplied fasteners to be used to attach the frames to the lights.

27.3.6 New fixtures are to be set on the deckhead panel frames. Lights are to be centered in the deck head panels when they are being reinstalled. The new fixtures will be reconnected to the existing wiring. Once the deck head panels have been replaced the light fixtures are to be centered in the light opening and the panels secured to the fixtures flange.

27.3.7 Contractor to remove the lighting fixtures from the alleyway bulkheads and disconnect from the existing wiring.

27.3.8 The new single light fixtures will be reconnected to the existing wiring and secured to the bulkheads.

27.3.9 Contractor to make note of all emergency lights when they are removed and mark the new lights with a red "E" as required. Markings must meet the approval of TCMS Surveyor.

27.4 Proof of Performance

27.4.1 Inspections

27.4.1.1 All work is to be completed to the satisfaction of the Chief Engineer and Ship's Electrical Officer.

27.4.2 Testing/Trials

27.4.2.1 All lighting circuits pertaining to this specification item are to be "Meggered" tested prior to the start of removals. Readings are to be recorded and presented to the Electrical Officer. Readings are to be documented for the Contractors QA documentation.

27.4.2.2 Upon completion of fixture installations, all lighting circuits are to be "Megger" tested, recorded and compared to original readings, documented, recorded and presented as above. Readings to be compared and any deficiencies noted and corrected.

27.4.2.3 All lights shall be proven operational upon completion of work.

27.4.2.4 Emergency lighting circuits are to be proven functional in "Emergency" mode.

27.4.3 Certification

27.4.3.1 All fixtures are to be Marine Grade UL168A.

27.4.3.2 Provide details for certification of equipment items – i.e. TCMS sign offs, Classification certifications etc.

27.5 Deliverables

27.5.1 Documentation (Reports/Drawings/Manuals)

27.5.1.1 "Megger" readings results.

27.5.1.2 The Contractor is to provide documentation denoting supplier contact information, part numbers, lead times and cost information, and invoice.

27.5.2 Spares

27.5.2.1 N/A.

27.5.3 Training

27.5.3.1 N/A.

28.0 HELICOPTER HANGER REFURBISHMENT

28.1 Identification (CI #140)

28.1.1 The intent of this specification is to refurbish the DAF Telescopic Hangar system fitted on the CCGS Henry Larsen based on the issues noted by CME Ltd .

28.2 References

28.2.1 HANGAR DETAILS, Estimated weight Hangar (15,100lbs), Track (3,500lbs)
Telescopic aluminum heli hangar
Manufactured by Daf Indal Ltd.
3570 Hawkestone Rd.
Mississauga, Ontario

28.2.2 Inspection Report of CCGS Henry Larsen-DAF Telescopic Hangar, CME Ltd.

28.2.3 FSR
Dean Mitchell
Canadian Maritime Engineering Ltd
Head Office: 90 Thornhill Dr, Dartmouth Nova Scotia, Canada B3B 1S3
Tel: 902-468-1888 Fax: 902-468-18 90

28.2.4 Drawings

Drawing Number	Description	Electronic Number

28.2.5 Regulations

28.2.5.1 As per applicable TCMS regulations.

28.2.6 Standards

28.2.6.1 All work to be completed to the satisfaction of the Chief Engineer and attending TC/MS surveyor.

28.2.7 Quality Assurance

28.2.7.1 As per the Contractor's QA program.

28.3 Technical

28.3.1 Contractor shall have an allowance of $40,000 for the services of FSR, CME Ltd to oversee, direct and complete work on Helicopter Hangar.

28.3.2 All parts required for the Hanger Refurbishment shall be GFE. 1379 action for any parts required beyond the GFE will be utilized.

28.3.3 Contractor shall in conjunction with Electrical Officer lock-out the helicopter hanger to ensure safe for service. Hangar Drive, track heating, lighting, limit switches etc. All hanger wiring that is fed from section to section shall be marked and recorded with photographs to ensure hanger is rewired as per original

28.3.4 **Hanger Lead Section**

28.3.5 The motor starter panel assembly for the hangar drive and the starter panel for the door drive of the lead section shall be opened up for inspection. All connections shall be checked for tightness and a visual inspection of all components is to be carried out.

28.3.6 Contractor shall close up panels once condition is ascertained and checks completed.

28.3.7 The track guides and wheel mounting assemblies shall be dismantled for inspection. Contractor shall inspect all wheel assemblies on all hangar sections including the bottom mounted and the side roller assemblies and check for flat spots /tapering/damage/corrosion/misalignment as per FSR instructions. Contractor shall check all phenolic wheel bushings and stainless steel pins for wear. On completion of inspection the Contractor shall inform the Chief Engineer of any defects found. Contractor shall re-assemble all wheel assemblies, install and lubricate them.

28.3.8 The phenolic wear strips shall be replaced in lead section, intermediate and in trailing sections (10 in total).

28.3.9 The hangar door curtain shall have tension springs at top of the door re-adjusted.

28.3.10 New lower rubber skirts shall be installed on lead section.

28.3.11 Limit switch for the travel on the lead section shall be replaced.

28.3.12 **Trailing Section**

28.3.13 Phenolic wear strips are to be replaced.

28.3.14 New lower skirts shall be installed on the trailing section.

28.3.15 **Fixed Section**

28.3.16 The personnel door assembly shall be lubricated to ensure smooth operation and seal area checked for full contact.

28.3.17 **Door Section**

28.3.18 The Contractor shall inspect and verify condition of manual drive assembly (upper and lower). Drive assemblies shall be checked for wear and lubricated. Keys and keyways shall be checked for condition and all set screws checked for tightness.

28.3.19 The hanger traverse drive reduction gearboxes (2) shall be removed, disassembled for inspection and reassembled as per original.

28.3.20 The hanger door drive gearbox is to be drained of oil, and opened for inspection. Gearbox is to be remounted and filled with oil to the working level.

28.3.21 **Electrical**

28.3.22 The heat tracing cables (8) shall be renewed when the hanger tracks are installed.

28.3.23 The following motors are to be tested under load and amp line draw measured and recorded.

- Disc brake motor. 440v, .07 amps.
- Hanger door motor 440v, 3.2 amps.
- Hanger traverse drive motor, 440v, 3.2 amps.

28.3.24 **Brake Assembly**

28.3.25 The brake assembly shall be dismantled for inspection and testing. The brake pads shall be checked for any signs of wear or damage. Upon reassembly the units are to be tested for proper operation.

28.3.26 **Aluminum Track**

28.3.27 The aluminum track is corroded in way of track seating. The tracks shall be removed and replaced. Hanger tracks approximately 42 feet middle track, and 58 feet inside track.

28.3.28 The area of steel deck under the track is corroded and shall be sandblasted and coated with 2 coats of marine grade primer and 2 top coats of Amercoat 5450 Alkyd Marine Enamel at 2 mils DFT per application. The hanger sections and track shall be removed to accomplish this work. Contractor shall ensure that lifting brackets/lugs supplied and installed by the Contractor are sufficient in strength and position so that distortion of any section does not happen during the lifting of each section.

28.3.29 The Contractor shall supply the crane, operator and sufficient personnel to safely remove the hanger sections.

28.3.30 The Contractor shall fit the tracks under the direction of the FSR including new mounting holes, adjusting to proper alignment tolerances, and leveling.

28.3.31 Once heaters are properly fitted the hanger tracks shall be reinstalled and aligned, Contractor shall supply 100 litres (per side) of Bee's Wax that has been heated and poured after the tracks are laid to prevent water pooling in between the pads under the tracks.

28.3.32 **Reinstallation**

28.3.33 The Contractor shall install each hanger section including the bolted door curtain assembly previously removed ensuring correct alignment.

28.3.34 The Contractor is to test manual traverse operation of the hanger sections prior to testing electrically.

28.3.35 Contractor shall reconnect all electrical connections and reconnect all locked out power supplies as per the Contractors Lock Out / Tag Out procedure.

28.3.36 The Contractor shall functionally test Telescopic Hanger System including door drive and traverse operation of the hanger sections. The Contractor Shall adjust all limit switches to provide correct operation of the door and traverse movement of the hanger sections during telescoping in and out to its extreme positions under the direction of the FSR.

GFE Parts List for repairs

4 of heater 1209-14-10
4 of heater 1209-14-11
13 of heater retainer 1209-19-1
120 of heater retainer 1209-19-2
4 of heater retainer 1209-20-1
1 of track assy. 1208-224-1
2 of pinion gears 1163-13-2

28.4 Proof of Performance

28.4.1 Inspections

28.4.1.1 The Contractor shall provide proof of performance with respect to all work. As a minimum this shall include copies of all inspection points identified within the Contractors proposed Quality Assurance program and those identified by rules and codes

28.4.2 Testing/Trials

28.4.2.1 The Contractor shall perform tests to verify that all requirements of the specification are met. Prior to testing the Contractor shall visually inspect all components for quality of workmanship, conformity to this specification and the intrinsic safety of equipment operation. As a minimum the Contractor shall provide a set of detailed instructions providing a tests and trials agenda.

28.4.3 Certification

28.4.3.1 N/A.

28.5 Deliverables

28.5.1 Documentation (Reports/Drawings/Manuals)

28.5.1.1 The Contractor shall provide two copies of the FSR's service report in pdf format within two weeks of completion of the work.

28.5.2 Spares

28.5.2.1 N/A.

28.5.3 Training

28.5.3.1 N/A.

29.0 HELICOPTER WORKSHOP STEEL REPAIR

29.1 Identification

The intent of this specification is intended to provide permanent steel repairs on the boat deck in way of the helicopter hanger workshop, further to ultrasonic analysis carried out by Eastern Technical Services and visual inspection.

NOTE: The extent of renewals as reflected in this specification is subject to approval by TCMS.

29.2 References

29.2.1 Equipment Data

29.2.2 Drawings

Drawing Number	Description	Electronic Number
ETS Report No. 14-252	Eastern Technical Services TM Report	N/A
PMC Dwg. No. 14-027-101	Steel Renewal IWO Hangar Workshop	N/A
13-0075-01	General Arrangement , Flight & Boat Deck	N/A

29.2.3 Regulations

29.2.3.1 All work performed and any modifications made, must be compliant with the latest Canada Shipping Act Regulations and in particular to the Marine Machinery Regulations. All work shall meet Transport Canada approved class regulations.

29.2.4 Standards

29.2.4.1 IACS 47 - Shipbuilding and Repair Standard

29.2.4.2 Lloyd's Register - Thickness Measurement and Close-up Survey

29.2.4.3 All work must be completed in compliance with the latest standards relating to ship repair. The final work will be subjected to a 100% visual inspection.

29.2.5 Quality Assurance Standards

29.2.5.1 As per the Contractors Quality Assurance Program.

29.3 Technical

29.3.1 The Renewals shall be completed in way of the helicopter hanger workshop on the Boat Deck. The area indicated below is approximate and shall be confirmed onsite by Contractor prior to renewal. Thickness Measurement Report references are stated based on Eastern Technical Services reporting. See PMC Dwg. No. 14-027-101 for sketches relevant to areas subject to renewal, and ETS Report No. 14-252 for referenced TM reporting.

29.3.2 Diminution of original plating is evaluated as follows:

Original Plating	w/ 30% Diminution
7 mm	4.9 mm

	Longitudinal Extent	Transverse Extent	TM Report	Approx. Area	New Plate Thickness
1.	Frame 60 to Frame 65 Approx.	Dwg. No. 14-027-101	14-252	6 m²	5/16”

29.3.3 All Work in this area will be done in conjunction with spec item hanger track and steel renewals and asbestos abatement for the upper deck.

29.3.4 Unless otherwise specified, all new plating shall be provided with Lloyds Register Grade ‘A’ certification, or an equivalent as approved by the attending TCMS surveyor.

29.3.5 All welding shall be completed by 480xx or equivalent electrodes, or as required for specific weld procedures. The Contractor shall submit welding procedures as requested by the attending TCMS surveyor, as required for fitting of new plating to other new or existing plating.

29.3.6 The Contractor shall be responsible for submitting weld procedures and steel certificates to TCMS, and for scheduling periodic inspections.

29.3.7 The contractor must disconnect and remove the items and equipment stored in the helicopter hangar workshop. This includes the FM 200 system and support base (FM200 system will be removed and returned to service by authorized FM200 service personnel), the workbench, firemen’s locker and gear, shelving and Mac Tool crib. All the equipment must be stored in an area protected from the elements during the entire process. Any items remaining in the compartment must be covered to protect from the dust and debris from the flooring and steel removal. All items removed from the workshop will be re-installed by the contractor after work is completed.

29.3.8 The contractor shall be responsible for removing and replacing the water supply and drain lines below the sink in this space, when performing the specification.

29.3.9 The contractor shall be responsible for disconnecting, removing and reinstalling any cabling that transits through the deck and interfere with the steel renewals. All removals to be approved by Chief Engineer. Any cabling that is unable to be removed due to corroded transits, will be repaired or replaced by 1379 action. Any cabling that is damaged by the contractor in way of this work will be replaced by the contractor at their expense. Any cabling that is disconnected and or removed will be meggared by the Contractor and inspected by the chief engineer prior to removal and after re-installation.

29.3.10 Once all the defective deck material is removed and disposed ashore, the affected steel will be cropped from the deck. The area of affected steel to be replaced will be agreed upon in conjunction with the chief engineer and attending TCMS inspector. Contractor to bid on steel replacement based on 2133 x 5486mm in size to be adjusted by 1379 once the true size is known and agreed upon by chief engineer and TCMS inspector. Contractor is to also use the above measurements to re-install the required Dex-O-Tex floor covering.

29.3.11 Once the steel repairs are completed and inspected the contractor shall clean the steel decking underneath and apply the following Dex O tex products in sequence.

a. Dex O Tex Amerlock 2 Epoxy applied to bare steel
b. Dex O Tex Decklite A60 Fire rated underlayment, equivalent to A30 minimum
c. Dex O Tex VLW Epoxy Underlayment top coat to desired height.

29.3.12 The total thickness off the Dex O Tex shall be at a height flush to existing coatings and shall be considered to be around 27 mm for bidding purposes. All Dex O Tex manufactures application instructions will be followed with a copy of relevant instructions and MSDS sheets given to the chief engineer.

29.4 Proof of Performance

29.4.1 Inspections

29.4.1.1 All Welding shall be to the satisfaction of the Chief Engineer and the attending TCMS inspector. NDT testing at the contractor's expense will be performed as required by TCMS on all welds.

29.4.2 Testing/Trials

29.4.2.1 All Drains, water connections and electrical cabling, FM200 systems will be proven to be operation to the satisfaction of the Chief Engineer.

29.4.3.1 Certificates for steel shall be presented to the Chief Engineer.

29.5 Deliverables

29.5.1 Documentation (Reports/Drawings/Manuals)

29.5.1.1 Two hard copies and 1 electronic copy in pdf format of all NDT testing and steel certificates will be given to the Chief Engineer.

29.5.2 Spares

29.5.1.2 N/A

29.5.3 Training

29.5.1.3 N/A

NOTES:

1. AS-FITTED MATERIALS AND WELDING TO BE COMPLETED TO THE SATISFACTION OF TCMS SURVEYORS.
2. ALL DIMENSIONS IN MILLIMETERS UNLESS NOTED OTHERWISE. ALL DIMENSIONS TO BE CHECKED AGAINST VESSEL PRIOR TO COMMENCEMENT OF WORK.
3. ALL NEW STEEL TO BE LLOYD'S REGISTER GRADE 'A' OR APPROVED EQUIVALENT BY TCMS ATTENDING SURVEYOR.
4. NEW STEEL TO BE BLASTED AND PRIMED.
5. ALL HOT WORK TO BE EXECUTED IN ACCORDANCE WITH CSA W59 AND CSA W47.1., USING E-7018 (OR APPROVED EQUIVALENT) ELECTRODES.
6. ALL WELDING TO BE DOUBLE CONTINUOUS, 3/16" EFFECTIVE THROAT, UNLESS NOTED OTHERWISE.
7. NDT SHALL BE AS FOLLOWS:
   - ALL WELDS 100% VISUAL EXAMINATION.
   - FILLET WELDS AND ANY PARTIAL PENETRATION WELDS 100% MPI.
   - ANY COMPLETE PENETRATION WELDS 100% UT.
8. ALL NEW STEEL TO BE COATED AW OWNER'S PAINT SCHEME. AFFECTED AREAS OF EXISTING STEEL TO BE RESTORED TO ORIGINAL CONDITION.
9. ALL UNDER DECK OUTFIT ITEMS AND FIXTURES REMOVED OR RELOCATED FOR THE PURPOSE OF COMPLETING STEELWORK TO BE REINSTATED.

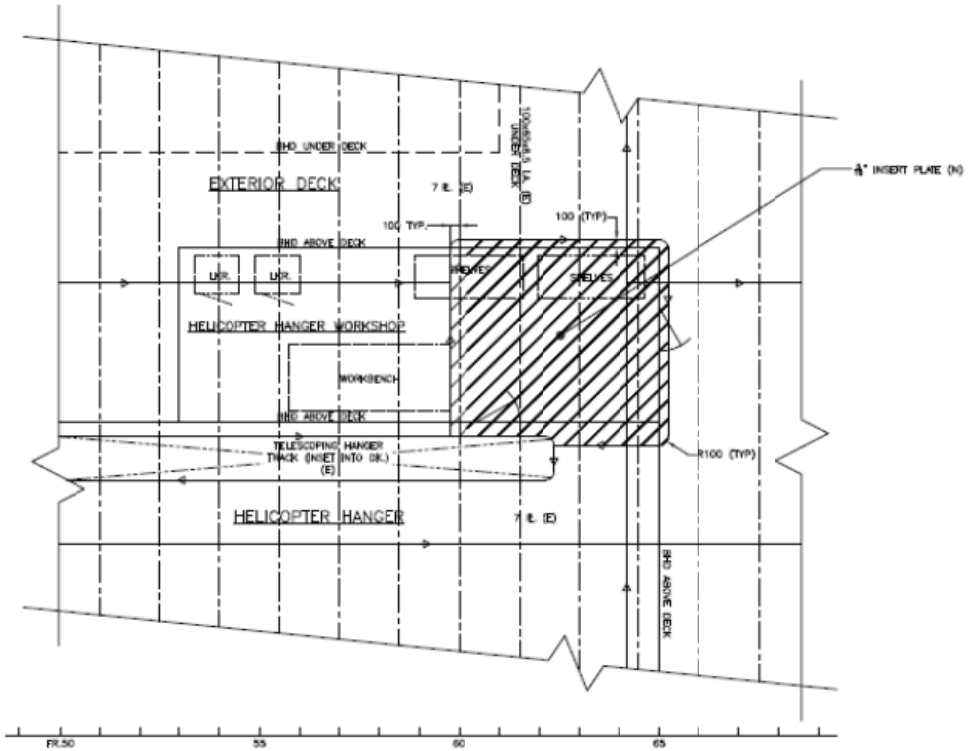

PLAN AT BOAT DECK

ABBREVIATIONS:

E - EXISTING DETAIL OR ARRANGEMENT
N - NEW DETAIL OR ARRANGEMENT
TYP. - TYPICAL DETAIL OR DIMENSION

Poseidon marine consultants limited

391 WATERFORD DRIVE
ST. JOHN'S, NL, CANADA
A1A 5A1
PH: (709) 739-4321
FAX: (709) 739-4321
www.poseidonmarine.ca

TITLE:

CCGS HENRY LARSEN
STEEL RENEWAL IWO HANGER WORKSHOP

PROJECT NO.: 14-027	REV: 0
DWG NO.: 14-027-101	
SCALE/PAGE: NTS / 11x17	
SHEET: 1 OF 1	DATE: 2014-05-09

Visual Inspections
Radiography & Ultrasonics
Mag & Penetrant Inspections
Eddy Current Testing
Structural Steel & Torque

Eastern Technical Services Ltd.

PO Box 13517, St. John's, Newfoundland, A1B 4B8
709-726-4622 27 Austin Street Fax 726-4626

Technical Reports
Engineering Studies
Gas Free Testing
Destructive testing
Insurance Reports

Report

HTS No.:	14-252	Copy:	Mr. Terry Whittle (terry.whittle@newdock.nf.ca)
Date:	30 April 2014	Date Received:	30 April 2014
Client:	St. John's Dockyard Ltd., 475 Water St., St. John's, NL., A1E 6B5	Inspected by:	C. Purcell, B.Sc. Chem., C.N.S.C., C.E.D.O., ASNT TC-1A RT, UT, ET, MT, PT level II. CAN/CGSB 48.9712 MT level II, ET, UT level I
Attn:	Mr. Jeff Warfield(fax 758-6825)	Inspected by:	M. Tulk, B.Sc. Chem. ASNT TC-1A RT, UT, ET, MT, PT level II.
P.O. No.:	GN 487 474		
Project:	C.C.G.S. Henry Larsen - Heli-deck Workshop		
Testing Required:	Ultrasonic Thickness Measurements	Signed:	

N.D.E. Supervisor

Remarks

As directed, ultrasonic thickness readings were obtained on the above noted vessel. Readings are shown in mm's on the attached sketch.

Equipment Used

Krautkramer DMS 2 digital thickness gauge (S/N 00MMRRF).
Krautkramer TC560 probe (S/N 00M581).
Various calibration blocks & 0.100 to 0.500 " steel step wedge.
Ultragel couplant.

ETS No.: 14-252, Date: 30 April 2014,
Client: St. John's Dockyard Ltd.,
Project: C.C.G.S. Henry Larsen - Heli-deck Workshop
Testing Required: Ultrasonic Thickness Measurements

HELI WORKSHOP - DECK PLATING

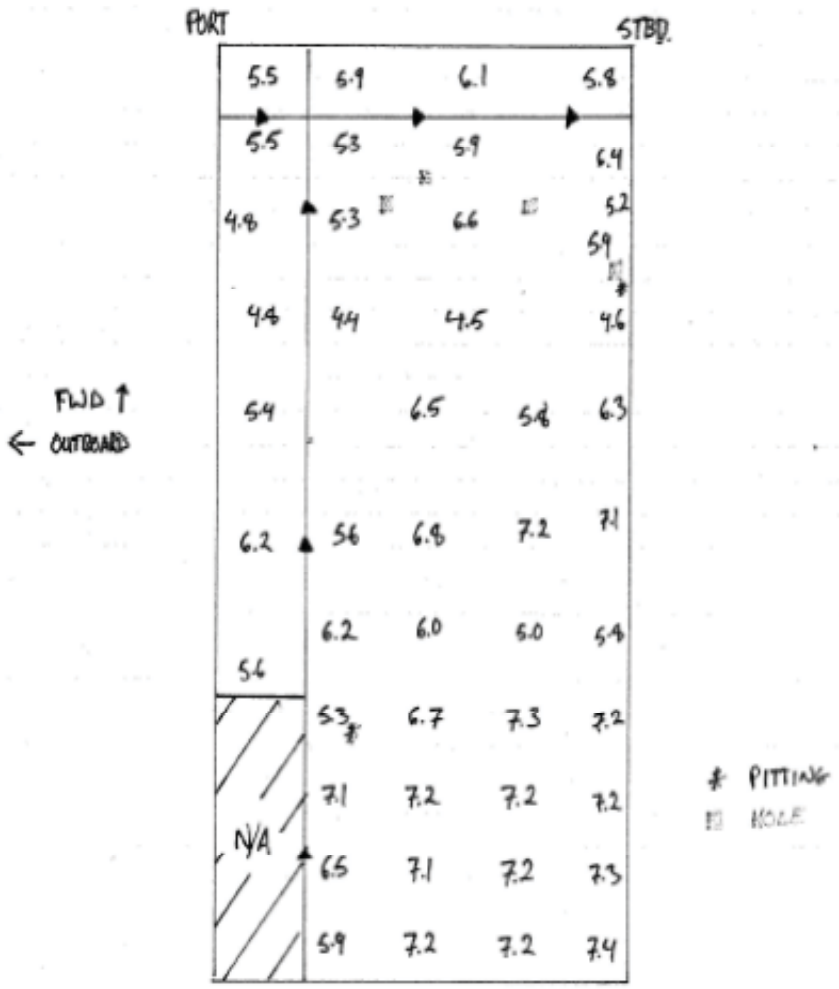

30.0 FLIGHT DECK STEELWORK REPAIR

30.1 Identification

30.1.1 The intent of this specification is to address steel renewals at the Flight Deck, specifically in way of the hanger track bottom plating under the helicopter hanger sides, Frs. 20-61 approx.

30.2 References

30.2.1 Equipment Data

30.2.1.1 The scope of steel renewals will be completed concurrently with other ongoing work scopes pertaining to the VLE (vessel life extension). Such work will include:

- removal of deckhead paneling below Flight Deck, as well as the strip out of other fixtures and outfit items to allow the abatement of asbestos insulation.
- removal of helicopter hangar, as well as tracks, gears and bi-metallic mounting plates.

As such, it shall be considered the responsibility of the Contractor to complete the removal of all materials and equipment normally required to perform hotwork, as well as their reinstatement without impacting cost of this specification.

30.2.1.2 Notwithstanding the above, the Contractor shall progress repairs in a manner that:

- regards prevailing and forecasted weather conditions, such that CCG property and equipment is suitably sheltered where applicable.
- does not compromise the structural integrity of the vessel.
- enables periodic and systematic inspections of ongoing and completed work by TCMS and CCG.

30.2.2 Drawings

Document	Description	Electronic Number
14-198-001 Rev 1	CCGS Henry Larsen - Flight Deck (Hangar) Steel Renewals	
ETS No. 14-725	Eastern Technical Services Report	

30.2.3 Regulations

30.2.3.1 Canada Shipping Act, 2001 | Hull Construction Regulations, Section 7.

30.2.4 Standards

30.2.4.1 Lloyd's Register | Thickness Measurement and Close-up Survey Guidance, v6.1 May 2012.

30.2.4.2 Unless otherwise specified, all new plating shall be Lloyd's Grade 'A', or an equivalent as approved by the attending TCMS surveyor.

30.2.4.3 All welding shall be completed by 480xx or equivalent electrodes, or as required for specific weld procedures. Welding shall be completed in accordance with CAN/CSA W59 and W47.1.

30.2.4.4 All new tee-connections shall be welded double continuous fillet, 6mm leg length. All new seams and butts shall be full penetration. Partial penetration welds may only be applied in way of closing plates not forming a watertight boundary, and with the approval of the attending TCMS surveyor.

30.2.5 Quality Assurance Standards

30.2.5.1 As per the Contractor's QA program.

30.3 Technical

30.3.1 In preparation for steel renewals, the Contractor shall:

- provide all ancillary services necessary to complete the subject repair. These may include, but are not limited to cranage, staging, cleaning, debris removal, water, shore power, etc.
- provide all appropriate permits for entrance into and completion of welding in confined spaces.
- ensure new steel is shot blasted and coated with weldable primer prior to placement onboard.

30.3.2 <u>During the completion of hot work, the Contractor shall:</u>

- supply fire watch while hot work is ongoing, with appropriate class portable fire extinguisher and charged fire hose ready for use.
- utilize existing seams/butts as practical when completing plate renewals. Where no butts/seams are present in the vicinity of new steel, corners to have a minimum of 100mm radius.
- subject work to inspection as coordinated with attending TCMS surveyor.

30.3.3 <u>Following the completion of hot work in specific areas of the vessel, the Contractor shall:</u>

- complete ND testing as requested by TCMS, and subject work to final inspections.
- clean affected spaces and remove debris from vessel.
- clean and apply primer to welded seams and other disturbed areas. Apply internal and external coatings as directed by CCG personnel.

30.3.4 Scope of Renewals

Renewal of hangar track bottom plating shall be completed in the regions listed below.

Areas indicated are approximate and shall be confirmed onsite by Contractor prior to renewal, in conjunction with CCG or their authorized designate.

TM Report references are stated based on ETS reporting. See **Appendix G** for sketches and renderings relevant to areas subject to renewal, and **Appendix G** for referenced TM reporting.

Diminution of original plating is evaluated as follows:

Original Plating/Stiffening Thickness	w/ 10% Diminution	w/ 20% Diminution	w/ 30% Diminution
9.5 mm	8.5 mm	7.6 mm	6.6 mm

PORT Hangar Track Bottom Plate - Flight Deck

	Longitudinal Extent	Transverse Extent	TM Report	Approx. Area	New Plate Thickness
1.	300mm aft of Frame 21 to 100mm aft of Frame 61	As per Sketch, see Annex G	14-725	8.4 m²	3/8”

STBD Hangar Track Bottom Plate - Flight Deck

	Longitudinal Extent	Transverse Extent	TM Report	Approx. Area	New Plate Thickness
1.	300mm aft of Frame 21 to 100mm aft of Frame 61	As per Sketch, see Annex G	14-725	8.4 m²	3/8”

30.3.5 ***Temporary Cutouts for New Steel Insertion***

30.3.5.1 Should temporary cropping be required to access spaces, criteria associated with the re-welding, testing and coating of existing insert plates shall be similar to that specified for renewals

30.3.6 Summary of Renewals

	Plating	**Stiffeners**	**Total**
Estimated Areas Identified (3/8" PLT.)	16.8 m²	-	**16.8 m² ~1250kg**

Note: The above table shall only be considered for estimating purposes only, until such time that the final scope of renewals is known.

30.4 Proof of Performance

30.4.1 Inspections

30.4.1.1 All work to be subjected to inspection by CCG and Transport Canada, at intervals agreed with the Contractor, and upon completion of the work.

30.4.2 Testing/Trials

30.4.2.1 All areas under repair are to be hose tested.

30.4.2.2 All work to be subjected to non-destructive testing as required by Transport Canada Marine Safety.

30.4.3 Certification

30.4.3.1 All new plating shall be Lloyd's Grade 'A', or an equivalent as approved by the attending TCMS surveyor.

30.5 Deliverables

30.5.1 Documentation (Reports/Drawings/Manuals)

30.5.1.1 All reports generated during NDT testing of welds to be submitted to CCG in pdf format on the completion of testing.

30.5.2 Spares

30.5.2.1 N/A.

30.5.3 Training

30.5.3.1 N/A.

31.0 HELICOPTER DECK LIGHTS

31.1 Identification

31.1.1 The intent of this specification is to replace the obsolete helicopter landing lights with a newer type Glamox/Aqua Signal LED fixture with integrated protective guard.

31.1..2 This specification item will be completed in conjunction with the following specifications.

- VLE CI# 39 Asbestos Remediation

31.2 References

31.2.1 Equipment Data

31.2.1.1 Original light. Appleton Kondu KM-9 Watertight Fixture for Hazardous Locations.

31.2.1.2 Replacement Lights . Glamox/Aqua Signal NS0270, HX55P-R, LED/110/230V with integrated protective guard.

31.2.2 Drawings

Drawing Number	Description	Electronic Number
33-0880-03	Lighting Deck Plan Flight & Boat Deck AFT	
12-0043-01	Flight & Boat Deck Plating	

31.2.3 Regulations

31.2.3.1 All work performed and any modifications made, must be compliant with the latest Canada Shipping Act Regulations and in particular to the Marine Machinery Regulations. All work shall meet Transport Canada approved class regulations.

31.2.4 Standards

31.2.4.1 TP 127E Transport Canada, Marine Safety, Ship Electrical Standards, Current Edition.

31.2.4.2 IEEE Std 45-2014 Recommended Practice for Electrical Installations on board ships.

31.2.4.3 ICAO Annex 14, Volume II , CAP 437 standard.

31.2.5 Quality Assurance Standards

31.2.5.1 As per the Contractors QA Program.

31.3 Technical

31.3.1.1 The existing twenty (20) Appleton Kondu helicopter deck lights are to be replaced with new Glamox/Aqua Signal HL55-P R LED fixtures. There will be 20 lights installed and 2 spares.

- Part Number: NS0270, HX55P-R, LED/110/230V , Green LED , Qty 22

31.3.1.2 The contractor will be responsible for purchasing and supplying all fixtures at the contractor's expense. The contractor will supply and fabricate watertight gaskets as needed for the installed lights.

31.3.1.3 Equivalent fixtures may be substituted but it is the contractor's responsibility to supply equivalent units to the satisfaction of the Chief Engineer.

31.3.1.4 The new fixture will meet ICAO Annex 14, Volume II , CAP 437 standard.

31.3.1.5 The existing lights have the following mounting arrangement:

Original light dimensions:

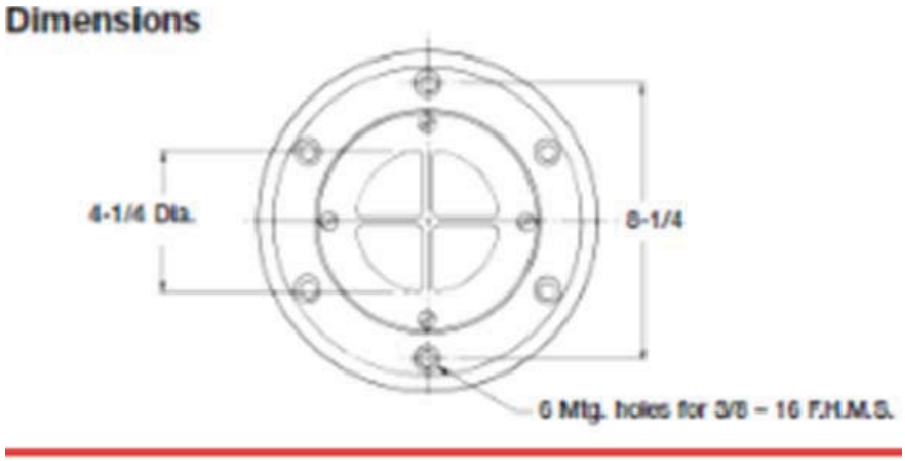

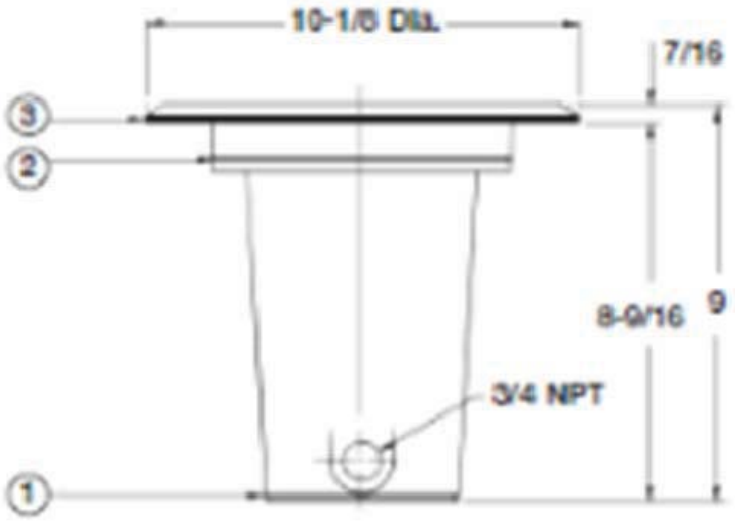

31.3.1.6 In conjunction with the Ships Electrical Officer the contractor shall ensure that the helicopter lights are locked out electrically at panel L112, located in the wheelhouse, breakers 8, 9 and 10, prior to any work commencing.

31.3.1.7 Contractor is to electrically disconnect the lights. The wiring is to be protected to reconnect to the new light fixtures.

31.3.1.8 The existing lights are held in place with 6 screws fastened into the hanger deck. The contractor is to remove the light fixtures from the deck and dispose of. The 5 inboard lights at frame 26 are located in the ships interior. Three lights are located in the deckhead of the #3 Fan Room and the Diving locker and two are fitted in the fan trunking port and stbd. The Contractor is responsible for identifying any interference items, their removal and replacement. The contractor is responsible for any insulation removal and re-insulation as a result of the replacement. This replacement will be done in conjunction with the asbestos removal spec.

31.3.1.9 The existing bolt holes are to be welded and ground flush with the hangar deck. Four (4) new holes, aligned to fit the new lights, are to be drilled and tapped to fit a 3/8” UNC bolt. The new lights are to be installed in the deck, complete with a new gasket (Contractor supply) and secured with new contractor supplied stainless steel countersunk 3/8” bolts. The Contractor is to also apply Marine RTV sealant between the gasket, light and deck.

31.3.1.10 All disturbed areas of steel will receive 2 coats of marine grade primer with a top coat of Matchless 700 white on the underside of the deck and Matchless 740 Dark grey on the helicopter deck.

31.3.1.11 The contractor will meggar test all old wiring associated wiring attached to the new light. Any wiring that does not meet TP127E rules will be replaced to the nearest junction box by 1379 action.

31.3.1.12 All cabling will be secured as per TP127E requirements with new watertight glands

31.3.1.13 Contact for details on acceptable light is detailed below:
John O'Driscoll | Managing Director | Glamox Canada Inc.
20 Crosbie Place, St.John's, NL, Canada, A1B 3Y8
Tel +1 709-753-2373 | Fax +1 709-753-2180 / Cell +1 709-685-6014
E-mail: johnod@glamox.ca | Web: www.glamox.com/gmo

1.3.1.14 The new Glamox/Aquasignal lights have the following dimensions:

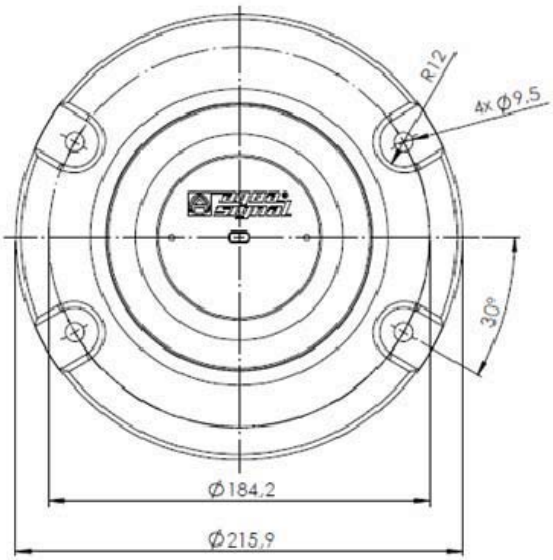

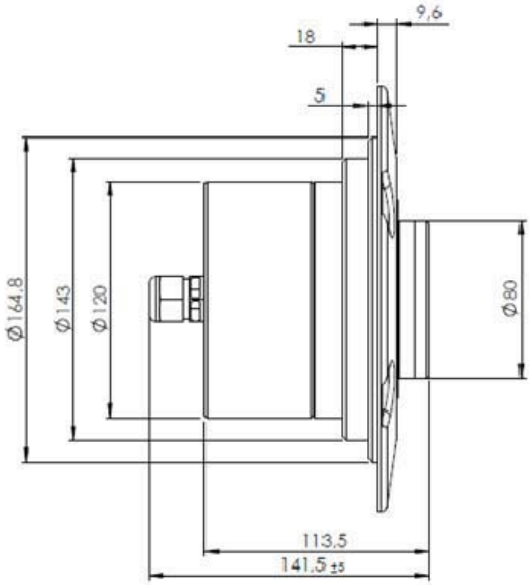

31.4 Proof of Performance

31.4.1 Inspections

31.4.1.1 All installations will be to the satisfaction of the chief engineer.

31.4.2 Testing/Trials

31.4.2.1 All circuits will be meggared to ensure cabling has not been damaged.

31.4.2.2 All lights will be tested to ensure correct operation.

31.4.2.3 All lights will be tested to a minimum of 40PSI fire hose to ensure watertight integrity.

31.4.3 Certification

31.4.3.1 N/A

31.5 Deliverables

31.5.1 Documentation (Reports/Drawings/Manuals)

31.5.1.1 Upon completion of the work Contractor is to provide 2 hard copies and 1 electronic copy of all readings and test reports in pdf format.

31.5.2 Spares

31.5.1.2 The contractor will supply the following spares
Qty 2 Glamox/Aqua Signal HL55-P R LED part # NS0270, HX55P-R, LED/110/230V

31.5.3 Training

31.5.1.3 N/A

32.0 EXHAUST REPAIR UPTAKES

32.1 Identification (CI #61)

32.1.1 The intent of this specification is replace the fixed support resilient mounts and sway brace supports on the exhaust uptakes and make required repairs to lagging and expansion pieces.

32.2 References

32.2.1 Equipment Data

Fitted Item	Mounts
Port ME	**8 fixed Support resilient mounts and 11 sway brace and tension compression elements**
Centre ME	**8 fixed Support resilient mounts and 9 sway brace and tension compression elements**
Stbd ME	**8 fixed Support resilient mounts and 11 sway brace and tension compression elements**
Aux Gen #1	**8 fixed Support resilient mounts and 13 sway brace and tension compression elements**
Port Thermal Fluid Unit	**4 fixed Support resilient mounts and 8 sway brace and tension compression elements**
Stbd Thermal Fluid Unit	**4 fixed Support resilient mounts and 8 sway brace and tension compression elements**
Incinerator	**4 fixed Support resilient mounts and 8 sway brace and tension compression elements**

32.2.2 Drawings

Drawing Number	Description	Electronic Number
22-0741-01	Diagram Diesel Exhausts and Uptakes	
22-0741-02	Diagram Diesel Exhausts and Uptakes	

32.2.3 Regulations

32.2.3.1

32.2.4 Standards

32.2.4.1 All work to be completed to the satisfaction of the Chief Engineer and attending TC/MS surveyor.

32.2.5 Quality Assurance Standards

32.2.5.1 As per the Contractor's QA program.

32.3 Technical

32.3.1 Contractor shall supply all equipment, enclosures, ventilation, staging, chain falls, cranage, slings, and shackles necessary to perform the work. All lifting equipment shall be appropriate for the expected duties, and be accompanied by current certification indicating, or be permanently marked as to being, of a safe working load for the expected duties.

32.3.2 All items will be contractor supply including the required fixed support resilient mounts and the sway brace and tension compression elements and required exhaust expansion joints.

32.3.3 Each fixed support resilient mount is to be replaced with a suitable replacement mount. Mounts are to be replaced one at a time and exhaust is to be supported during the replacements. New contractor supplied fasteners are to be installed on all mounts.

32.3.4 Any changes required to the mount supports to fit new mounts shall be completed by 1379 action.

32.3.5 The contractor is to replace all sway brace and tension compression elements. Contractor will measure the length of the sway bar prior to replacement to ensure the exhaust remains in the same position after replacement. Sway bars are to be replaced one at a time to ensure the exhaust is properly supported at all times.

32.3.6 Contractor is to repair damaged exhaust insulation on the Stbd ME silencer outboard side, at the upper deck level. Damaged area is to have insulation removed and new calcium silicate block insulation is to be installed and properly supported. Once repairs have been completed area is to be lagged in fire proof cloth such as Alpha Maritex 2025/9383 and properly sealed. Area under repair approximately 0.5 M^2.

32.3.7 At the main deck level of the stack the insulation shall be removed in the area of the resilient mount support on the Stbd ME outboard side. Contractor to supply the services of a certified company to complete NDT testing in this area. Contractor is to supply a weld procedure for the required repairs and repair any cracks found. Upon completion of inspection and repairs contractor is to reinsulate the area with Calcium Silicate block insulation and suitably cover, as above. Area under repair approximately 0.5 M^2.

32.3.8 Contractor to quote a unit cost for an additional 1 M^2 of insulation repairs.

32.3.9 On the port main engine exhaust the contractor shall remove the insulation blanket from the upper expansion joint, above the silencer. The exhaust shall be properly supports and the expansion joint removed.

32.3.10 New contractor supplied expansion joint and gaskets shall be installed in exhaust. Expansion joint shall be secured in place with new contractor supplied fasteners.

32.3.11 Upon completion of the installation and successful leak testing, a new contractor supplied exhaust blanket shall be installed.

32.3.12 On the port and stbd Thermal Fluid Unit exhausts, the contractor shall remove the insulation blankets from the upper expansion joints located above the exhaust silencers. Both expansion joints shall be removed and new contractor supplied expansion joints and gaskets shall be reinstalled. The port unit exhaust is 350 mm dia and the stbd unit exhaust is 450 mm dia.

32.3.13 Both exhausts shall be properly supported during the installation of the new expansion joints. New expansion joints shall be secured with new contractor supplied fasteners. Upon completion of the installation and successful leak testing, new contractor supplied insulation blankets shall be secured over the expansion joint.

32.4 Proof of Performance

32.4.1 Inspections

32.4.1.1 A full visual inspection is to take place before any lagging covers all new and disturbed work. A functional test will be conducted once the main and auxiliary machinery is back in service.

32.4.2 Testing/Trials

32.4.2.1 The completed installation is to be functionally tested to the satisfaction of the Chief Engineer. Expansion joints shall be proven leak free before insulation blankets are installed.

32.4.3 Certification

32.4.3.1 Provide details for certification of equipment items – i.e. TCMS sign offs, Classification certifications etc.

32.5 Deliverables

32.5.1 Documentation (Reports/Drawings/Manuals)

32.5.1.1 N/A.

32.5.2 Spares

32.5.2.1 N/A.

32.5.3 Training

32.5.3.1 N/A.

33.0 EXTERIOR DOORS

33.1 Identification (CI #31)

33.1.1 The intent of this specification is to replace the currently fitted worn and damaged exterior doors with similar new ones.

33.2 References

33.2.1 Equipment Data

Fitted Item	Type
Wheel House Entrance P	Spraytight door, 2 dog LHR (Joiner Systems) completed with window
Wheel House Entrance S	Spraytight door, 2 dog RHR (Joiner Systems) completed with window
Double Fan Room Entrance	Class 1, 2 dog RHR Weathertight door (Joiner Systems) clear opening 31.5”x 63” (insulated)
Chiller room Entrance	Class 1, 2 dog RHR Weathertight door (Joiner Systems clear opening 31.5”x 63”(insulated)
Emergency Generator Room	Class 1, 2 dog LHR Weathertight door (Joiner Systems clear opening 31.5”x 70.5”(insulated)

33.2.3 Drawings

Drawing Number	Description	Electronic Number
15-0304-01	**Door Schedule & Details**	

33.2.4 Regulations

33.2.3.1 Newfoundland and Labrador Regulations, 111/98, Asbestos Abatement Regulations 1998, under the Occupational Health and Safety Act (O.C. 98-730) or applicable provincial Asbestos Abatement regulations.

33.2.4 Standards

33.2.4.1 Doors supplied are to be Transport Canada Approved for intended purpose.

33.2.5 Quality Assurance Standards

33.2.5.1 As per the Contractors QA program.

33.3 Technical

33.3.1 Contractor shall supply all equipment, enclosures, ventilation, staging, chain falls, cranage, slings, and shackles necessary to perform the work. All lifting equipment shall be appropriate for the expected duties, and be accompanied by current certification indicating, or be permanently marked as to being, of a safe working load for the expected duties.

33.3.2 All items will be contractor supply including the replacement doors.

33.3.3 Contractor is responsible to ensure that all spaces will be protected from the elements during the removal and installation process.

33.3.4 The perforated covering and insulation is to be removed from around the double fan room door. The spray fireproofing on the bulkhead insulation has been shown to contain a small amount of Asbestos. Contractor to ensure that a certified company removes this insulation using all mandated safeguards and procedures.

33.3.5 All items in the fan room are to be properly protected prior to starting any hot work.

33.3.6 The present door and frame are to be cut from the bulkhead and disposed of. The bulkhead is to be prepared for the new door installation.

33.3.7 The new door is to be installed in the present opening and squared and checked for proper operation. The new door frame is to be completely fillet welded on both sides of the door frame.

33.3.8 All areas of disturbed steel shall be painted with 2 coats of contractor supplied marine primer. These areas are to be painted with 2 coats of contractor supplied white paint upon completion of work. The new door is to be painted with 2 coats of contractor supplied white paint.

33.3.9 The areas around the inside of the door shall be reinsulated and the insulation covered with perforated metal upon completion of all testing.

33.3.10 The Chiller door and Emergency Generator door shall be replaced in the same manner as the double fan room door.

33.3.11 The bridge wing entrance doors shall be replaced in conjunction with the asbestos remediation being completed on the bridge.

33.3.12 Contractor is to remove the sheet metal frame around the doors and set aside and protect for reinstallation after the installation of the new door. The radios and other equipment on the outboard sides of the doors are to be disconnected and removed

to allow for the frame removals. Radios and all other removed equipment are to be properly stored and reinstalled upon completion of door installations.

33.3.13 Any insulation required to be removed shall be completed as part of the bridge insulation remediation.

33.3.14 The existing doors and frames are to be cut from the bridge wing bulkheads and disposed of ashore. All areas of the bridge in way of the doors shall be protected prior to any hot work being completed.

33.3.15 The door openings are to be properly prepared for the new door installations.

33.3.16 The new doors are to be installed into the present bulkhead openings. The doors are to be squared, tacked in place and proven operational. Once the doors are proven operational, the door frames are to be full fillet welded on both sides of the frame.

33.3.17 All areas of disturbed steel shall be painted with 2 coats of contractor supplied primer. These areas are to be painted in 2 coats of contractor supplied white paint upon completion of work. The new door is to be painted with 2 coats of contractor supplied white paint.

33.3.18 Upon completion of installations all doors are to be hose tested to the satisfaction of the Chief Engineer and attending TC/MS surveyor.

33.4 Proof of Performance

33.4.1 Inspections

33.4.1.1 Doors are to open and close, fair and true, all latches and clips to secure and release as per industrial standards.

33.4.2 Testing/Trials

33.4.2.1 The completed installation is to be functionally tested to the satisfaction of the Chief Engineer and attending TC/MS inspector. The doors are to be hose tested and proven water tight to the satisfaction of the attending TC/MS Inspector.

33.4.3 Certification

33.4.3.1 All insulating materials are to be certified Asbestos Free.

33.4.3.2 All doors are to be Transport Canada Approved for the intended use. Two Copies of door certification is to be provided to the Technical Authority. Prior to the installation.

33.5 Deliverables

33.5.1 Documentation (Reports/Drawings/Manuals)

33.5.1.1 Contractor is to supply 2 original copies of any manufacturer's documentation for each of the new doors prior to installation.

33.5.2 Spares

33.5.2.1 N/A.

33.5.3 Training

33.5.3.1 N/A.

34.0 INTERING SYSTEM TANK COATING

34.1 Identification (CI # 23)

34.1.1 The intent of this item is to clean, inspect, coat and obtain TCMS credit for the Intering System Tanks.

The Intering System Tanks shall be done in conjunction with Specification 13 Bubbler Piping Renewal.

Coast Guard will be retaining the services of an independent consultant to verify that the surface preparation and coating; storage, preparation, and application are as per this specification and coating manufacturer's specifications.

Payment for the consultant will be directly by Coast Guard outside of this contract.

The Contractor shall arrange scheduling of TCMS surveyors as required.

34.2 References

34.2.1 Equipment Data

34.2.1.1

Tank	Location	Capacity (m3)	Field #
Aft Heeling Tank	89 -108	208.02	3L029
Fwd Heeling Tk	108-127	196.93	3L030
Aft Stability	127 – 140	368.17	3L040
Fwd Stability	140 - 150	256.05	3L041

34.2.2 Drawings

Drawing Number	Description	Electronic Number
13-079-01	Capacity Plan	
15-0206-01	W.T. hatches and Manholes	
22-0733-01 sht 1 and 2	Vents and Sounding Arrgt	
	General Arrgt Upper Deck & Forecastle Vent Locations	65411001
HFX1300125 rev1	CCGS Henry Larsen Condition Assessment Report	
12-0716-01	Structure in way of Stability Tanks	

34.2.3 Regulations

34.2.3.1 MOSH, and FSSM

34.2.4 Standards

34.2.4.1 CG coating standards , coating manufacturer's specifications.

34.2.4.2 NACE Standards as applicable for surface prep and application.

34.2.5 Quality Assurance Standards

34.2.5.1 CG coatings standards, Independent consultant.

34.3 Technical

34.3.1 **Manhole Locations**

Aft Heeling Tank	Main Gen Room, upper level, port and stbd
Fwd Heeling Tank	Main Gen Room, upper level, port and stbd
Fwd Stability Tank	Aft Stab Tank, fwd bulkhead, port and stbd
Aft Stability Tank	Main Deck, fwd of Blkhd at Frame 127, port and stbd.

34.3.2 The Intering System Tanks are skin tanks, access holes through the ship's hull may be required to facilitate the specified work. All costs associated with this must be included in the bid. This will include providing a written repair plan including weld procedures acceptable to TCMS and also include internal tank coating touch-up in way of welding.

34.3.3 All vents and transducers and related equipment are to be blanked or otherwise protected prior to and during cleaning, blasting and painting activity.

34.3.3 All internal surfaces of the tanks are to be high pressure water washed (min 3,000 psi fresh water) with a mixture of 50:1 Holdtight 102® Solution from Vapcor Inc.(contractor supplied) or equivalent. This action will de-salinate all surfaces and prevent flash rusting, while removing all loose deposits to allow viewing of tank/coating condition. The Contractor will be responsible for removal and disposal of all cleaning water, sludge and debris generated by cleaning process.

34.3.4 **The Contractor is to pay particular attention to the upper air ducts and lower cross ducts in the Intering System Tanks.**

34.3.5 Hold for inspection of tanks by owner's representative and CG retained consultant and TCMS surveyor prior to further cleaning. The amount of areas (square meters) of bare steel to be abrasive blasted will be determined at this point.

34.3.6 All areas of bare steel in tanks are to be abrasive blast cleaned to minimum SSPC-SP6 (ISO 8501-1:1988). The Contractor will be responsible for removal and disposal of all debris generated by abrasive blast process.

For bidding purposes: The Contractor is to bid the percentages of total areas as described and provide a unit cost/ m^2 for adjustment of blast and coating requirement.

34.3.7 **Fwd Stability Tank**. The coating in this tank is considered as good. The surface area in the Fwd Stability Tank is 2325 m^2. The Contractor is quote on blast cleaning 25% or 581 m^2 in the tank. The Contractor is to pay particular attention to the upper air duct and lower cross duct in the tank.

34.3.8 **Aft Stability Tank**. The coating in this tank is generally considered as good. Very limited inspection of the crossover duct indicated poor coating condition. The surface area in the Aft Stability Tank is 3342 m^2. The Contractor is quote on blast cleaning 25% or 836 m^2 in the tank. The Contractor is to pay particular attention to the upper air duct and lower cross duct in the tank.

34.3.9 **Fwd Heeling Tank**. The tank coating was considered good above stringer deck, fair below, with breakdown at the edges of openings and faceplates. The surface area in the Fwd Heeling Tank is 1790 m^2. The Contractor is quote on blast cleaning 50% or 894 m^2 in the tank. The Contractor is to pay particular attention to the lower cross duct in the tank.

34.3.10 **Aft Heeling Tank**. The tank coating was considered good throughout. The surface area in the Aft Heeling Tank is 1890 m^2. The Contractor is quote on blast cleaning 25% or 472 m^2 in the tank. The Contractor is to pay particular attention to the lower cross duct in the tank

34.3.11 Hold for inspection of tanks by owner's representative and CG retained consultant prior to coating.

34.3.12 The entire surface of the tanks is to be treated with Royal coatings Easy Prep or equivalent as per the manufacturer's data sheet. Then high pressure water washed (min 3,000 psi fresh water). This will etch the surfaces and prepare the intact existing epoxy coatings for re-coating.

34.3.13 Hold for inspection of tanks by owner's representative and CG retained consultant prior to coating.

34.3.14 If flash rusted to worse than Grade HB2M (refer to International Hydroblasting Standards) between blasting and coating application, the surface will be re-blasted to the specified standard.

34.3.15 All areas of bare metal are to be given (1) coat of WASSER MC-Miozinc 100 or equivalent as per paint manufacturer's instructions for mixing, ventilation, application and precautions at 3 to 5 mils D.F.T.

34.3.16 Hold for inspection of tanks by owner's representative and CG retained consultant.

34.3.17 An intermediate coat of WASSER MC-Tar 100 Red or equivalent is to be applied to 100% of the void space surface at 5 to 7 mils D.F.T

34.3.18 Hold for inspection of tanks by owner's representative and CG retained consultant.

34.3.19 A final coat of WASSER MC-Ballast Coat beige or equivalent is to be applied to 100% of the void space surface at 4 mils D.F.T.

34.3.20 Hold for inspection of tanks by owner's representative and CG retained consultant.

34.3.21 Any hull removals are to be re-welded in place. Inspected and tested to the satisfaction of attending TCMS Surveyor.

34.3.22 Tanks coatings to be repaired in way of welds.

34.3.23 Strum boxes to have strainers cleaned and replaced in good order. Strum box wells to be cleaned of all dirt and debris.

34.3.24 The tank level transducers are to be proven operational in the presence of the Chief Engineer or delegate.

34.3.25 Hold for inspection of tanks by owner's representative prior to closing up.

34.3.26 The contractor is to disassemble the tanks vent heads from each tank, clean and lay out the components for inspection by TCMS Surveyor and the Chief Engineer.

34.3.27 Following inspection the vent heads are to be reassembled in good order using anti-seizing compound on all fastener threads.

34.3.28 Tanks to be closed up in good order, using new ¼" neoprene gaskets on all manholes. All fasteners are to be coated with an approved anti-seize compound.

34.3.29 Vent heads to be replaced in good order following testing in 31.4.2. All fasteners are to be coated with an approved anti-seize compound.

34.4 Proof of Performance

34.4.1 Inspections

34.4.1.1 Inspections by owner's representative and CG retained consultant and TCMS surveyor as detailed above.

34.4.1.2 NACE inspector will be required to inspect the all components for surface preparation and for each of the applications of the coating system including enviromentals, equipment, mixing and application processes. It is the contractors responsibility to arrange for the NACE inspector to be present at the required times

to inspect the preparation and applications. Coating at each stage will also be to the satisfaction of the chief engineer or designate.

34.4.2 Testing/Trials

34.4.2.1 Hydrostatic and/or air test as required by TCMS.

34.4.2.2 The Contractor is to quote separately the cost of each of the following:

34.4.2.3 The Contractor is to hydrostatically test tanks to the satisfaction of the attending TCMS surveyor, and the Chief Engineer. Tanks to be pumped dry and water disposed of by the Contractor upon completion of test.

34.4.2.4 The Contractor is to perform an air test on all tanks using an open ended manometer to the satisfaction of the TCMS surveyor and the Chief Engineer.

34.4.2.5 All tank vents and level transducers are to be proven operational in the presence of the Chief Engineer or delegate.

34.4.3 Certification

34.4.3.1 TCMS credit for the tanks.

34.5 Deliverables

34.5.1 Documentation (Reports/Drawings/Manuals)

34.5.1.1 The Contractor shall provide the Chief Engineer with a report in both electronic (.pdf) and hardcopy formats of the Contractors work outlining the surface area abrasive blasted, quantity of coatings applied, and any alterations / repairs made prior to the acceptance of this item.

34.5.1.2 The Contractor shall provide the Chief Engineer with a completed copy of all Safety Management System forms and permits for this item prior to the work being initiated.

34.5.1.3 The Contractor shall provide the Chief Engineer with a report in both electronic (.pdf) and hardcopy formats of the NDT testing on any required access openings.

34.5.1.4 The Contractor will provide written proof of TCMS survey credit for the tanks utilizing TCMS Survey Record book upon the completion of the work. TCMS Survey Record Book will be provided to the successful Contractor by the Chief Engineer.

34.5.2 Spares

34.5.2.1 N/A.

34.5.3 Training

34.5.3.1 N/A.

35.0 BALLAST TANK COATINGS

35.1 Identification (CI #21)

35.1.1 The intent of this item is to clean, inspect, coat and obtain TCMS credit for the Ballast Tanks.
The ballast tanks are considered a confined space under the Coast Guard Safety Management System.

Coast Guard will be retaining the services of an independent consultant to verify that the surface preparation and coating; storage, preparation, and application are as per this specification and coating manufacturer's specifications.

Payment for the consultant will be directly by Coast Guard outside of this contract.

The Contractor shall arrange scheduling of TCMS surveyors as required.

35.2 References

35.2.1 Equipment Data

35.2.1.1

Tank	Location (Frame #)	Surface Area m^2	Capacity m^3	Field No.
Aft Peak	Stern – 0	556	82.80	3L001
Aft Trim	0 – 18	773	109.90	3L003
Fwd Trim	175-189	1088	154.79	3L049
Fore Peak	184 – Stem	1794	202.88	3L051

35.2.2 Drawings

Drawing Number	Description	Electronic Number
13-0079-01	Capacity Plan	
15-0206-01	WT hatches and Manholes	
HFX1300125 rev1	CCGS Henry Larsen Condition Assessment Report page 20	

35.2.3 Regulations

35.2.3.1 MOSH and FSSM.

35.2.4 Standards

35.2.4.1 N/A.

35.2.5 Quality Assurance Standards

35.2.5.1 CG coatings standards, Independent consultant.

35.3 Technical

35.3.1 Manhole Locations

Fore Peak Tank	Bubbler Compt, fwd bulkhead port & stbd
Fwd Trim Tank	Bubbler V/V Manifold Compt, Fwd Bhead
Aft Peak Tank	Steering gear Compt
Aft Trim Tank	Helo FO Pump Room

35.3.2 The tanks are skin tanks, access holes through the ship's hull may be required to facilitate the specified work. All costs associated with this must be included in the bid. This will include providing a written repair plan including weld procedures acceptable to TCMS and also include internal tank coating touch-up in way of welding.

35.3.3 All tank vents and transducers and related equipment are to be blanked or otherwise protected prior to and during cleaning, blasting and painting activity.

35.3.4 All internal surfaces of the ballast tanks are to be high pressure water washed (min 3,000 psi fresh water) with a mixture of 50:1 Holdtight 102® Solution from Vapcor Inc.(contractor supplied) or equivalent . This action will de-salinate all surfaces and prevent flash rusting, while removing all loose deposits to allow viewing of tank/coating condition. The Contractor will be responsible for removal and disposal of all cleaning water, sludge and debris generated by cleaning process.All debris to be removed from tanks and disposed of ashore.

35.3.5 Hold for inspection of tanks by owner's representative and CG retained consultant and TCMS surveyor prior to further cleaning. The amount of areas (square meters) of bare steel to be abrasive blasted will be determined at this point.

35.3.6 All areas of bare steel in tanks are to be abrasive blast cleaned to minimum SSPC-SP6 (ISO 8501-1:1988). The Contractor will be responsible for removal and disposal of all debris generated by abrasive blast process.

For Bidding Purposes: The Contractor is to bid the percentages of total areas as described and provide a unit cost/ m^2 for adjustment of blast and coating requirement.

35.3.7 **Forepeak Tank**

35.3.8 The tank has two distinct sections: the area above the stringer and the area below, which wraps under the chain lockers.

35.3.9 The coating on the area above the stringer is in better condition. The surface are above the stringer is 718 m^2. The Contractor is to quote on blast cleaning 50% of this area.

35.3.10 The coating on the area below the stringer is in poor condition. The surface are below the stringer is 1076 m^2. The Contractor is to quote on blast cleaning 100% of this area.

35.3.11 **Forward Trim Tank**

35.3.12 The coating is fair on the area of the tank above the upper stringer and poor below, with general corrosion throughout. The Contractor is to quote on blast cleaning 100% of this tank.

35.3.13 **Aft Trim Tank**

35.3.14 The coating is good except in pockets in way of strut castings where it was poor. The Contractor is to quote on blast cleaning 50% of this tank.

35.3.15 **Aft Peak Tank**

35.3.16 The tank coating is good except scale and corrosion painted over, mainly in way of openings and edges of stiffeners near deckhead – approximately 10% of the area. The Contractor is to quote on blast cleaning 30% of this tank.

35.3.17 Hold for inspection of tanks by owner's representative and CG retained consultant prior to coating.

35.3.18 The entire surface of the tanks is to be treated with Royal coatings Easy Prep or equivalent as per the manufacturer's data sheet. Then high pressure water washed (min 3,000 psi fresh water).. This will etch the surfaces and prepare the intact existing epoxy coatings for re-coating.

35.3.19 Hold for inspection of tanks by owner's representative and CG retained consultant prior to coating.

35.3.20 If flash rusted to worse than Grade HB2M (refer to International Hydro-blasting Standards) between blasting and application of coating, the surface will be re-blasted to the specified standard.

35.3.21 All areas of bare metal are to be given (1) coat of WASSER MC-Miozinc 100 or equivalent as per paint manufacturer's instructions for mixing, ventilation, application and precautions at 3 to 5 mils D.F.T.

35.3.22 Hold for inspection of tanks by owner's representative and CG retained consultant prior to re-coating.

35.3.23 An intermediate coat of WASSER MC-Tar 100 Red or equivalent is to be applied to 100% of the void space surface at 5 to 7 mils D.F.T.

35.3.24 Hold for inspection of tanks by owner's representative and CG retained consultant.

35.3.25 A final coat of WASSER MC-Ballast Coat beige or equivalent is to be applied to 100% of the void space surface at 4 mils D.F.T.

35.3.26 Hold for inspection of void spaces by owner's representative and CG retained consultant.

35.3.27 Any hull removals are to be re-welded in place. Inspected and tested to the satisfaction of attending TCMS Surveyor.

35.3.28 Tank coatings to be repaired in way of welds.

35.3.29 The tank level transducers are to be proven operational in the presence of the Chief Engineer or delegate.

35.3.30 Hold for inspection of tanks by owner's representative prior to closing up.

35.3.31 The contractor is to disassemble the tank vent heads from each tank, clean and lay out the components for inspection by TCMS Surveyor and the Chief Engineer.

35.3.32 Following inspection the tank vent heads are to be reassembled in good order using anti-seizing compound on all fastener threads.

35.3.33 Tanks to be closed up in good order, using new ¼" neoprene gaskets on all manholes. All fasteners are to be coated with an approved anti-seize compound.

35.3.34 Vent heads to be replaced in good order following testing in 32.4.2. All fasteners are to be coated with an approved anti-seize compound

35.4 Proof of Performance

35.4.1 Inspections

35.4.1.1 Inspections by owner's representative and CG retained consultant and TCMS surveyor as detailed above.

35.4.1.1 NACE inspector will be required to inspect the all components for surface preparation and for each of the applications of the coating system including enviromentals, equipment, mixing and application processes. It is the contractors responsibility to arrange for the NACE inspector to be present at the required times to inspect the preparation and applications. Coating at each stage will also be to the satisfaction of the chief engineer or designate.

35.4.2 Testing/Trials

35.4.2.1 Hydrostatic and/or air test as required by TCMS.

35.4.2.2 The Contractor is to quote separately the cost of each of the following:

35.4.2.3 The Contractor is to hydrostatically test the tanks to the satisfaction of the attending TCMS surveyor, and the Chief Engineer. Tanks to be pumped dry and water disposed of by the Contractor upon completion of test.

35.4.2.4 The Contractor is to perform an air test on all tanks using an open ended manometer to the satisfaction of the TCMS surveyor and the Chief Engineer.

35.4.2.5 All tank vents and transducers are to be proven operational.

35.4.3 Certification

35.4.3.1 TCMS credit for Ballast Tanks.

35.5 Deliverables

35.5.1 Documentation (Reports/Drawings/Manuals)

35.5.1.1 The Contractor shall provide the Chief Engineer with a typewritten report in both electronic (.pdf) and hardcopy formats of the Contractors work outlining the surface area abrasive blasted, quantity of coatings applied, and any alterations / repairs made prior to the acceptance of this item.

35.5.1.2 The Contractor shall provide the Chief Engineer with a completed copy of all Safety Management System forms and permits for this item.

35.5.1.3 The Contractor shall provide the Chief Engineer with a typewritten report in both electronic (.pdf) and hardcopy formats of the NDT testing on any required access openings.

35.5.1.4 The Contractor will provide written proof of TCMS survey credit for the tanks utilizing TCMS Survey Record book upon the completion of the work. TCMS Survey Record Book will be provided to the successful Contractor by the Chief Engineer.

35.5.2 Spares

35.5.2.1 N/A.

35.5.3 Training

35.5.3.1 N/A.

36.0 VOID SPACE COATINGS

36.1 Identification (CI #22)

36.1.1 The intent of this item is to clean, inspect, coat and obtain TCMS credit for the Void Spaces.

The Intering System Tanks shall be done in conjunction with Specification 13 Bubbler Piping Renewal.

Coast Guard will be retaining the services of an independent consultant to verify that the surface preparation and coating; storage, preparation, and application are as per this specification and coating manufacturer's specifications.

Payment for the consultant will be directly by Coast Guard outside of this contract.

The Contractor shall arrange scheduling of TCMS surveyors as required.

36.2 References

36.2.1 Equipment Data

36.2.1.1 Name	Location	Capacity M^3	Field No
No 1 Void WB Tank Stbd	Fr 18-30	105.94 m3	3L004
No 1 Void WB Tank Port	Fr 18-30	105.36 m3	3L005
No 2 Void Stbd	Fr 127-140	29.54 m3	3L036
No 2 Void Port	Fr 127-140	29.54 m3	3L037
No 3 Void Stbd	Fr 140-150	17.25 m3	3L038
No 3 Void Port	Fr 140-450	17.25 m3	3L039
No 4 Wing Void Tank Stbd	Fr 150-165	92.019 m3	3L043
No 4 Wing Void Tank Port	Fr 150-165	92.019 m3	3L044
Cofferdam Fwd	Fr120-127	19.0 m3	3L035
Cofferdam Aft	Fr 27-30		3L010
Pipe Tunnel	Fr 122-167		3L042

36.2.2 Drawings

Drawing Number	Description	Electronic Number
13-079-01	Capacity Plan	
15-0206-01	W.T. hatches and Manholes	
22-0733-01 sht 1 and 2	Vents and Sounding Arrgt	
23-0834-01	Arrangement Bilge High Level Alarms	
	General Arrgt Upper Deck & Forecastle Vent Locations	65411001
HFX1300125 rev1	CCGS Henry Larsen Condition Assessment Report	

36.2.3 Regulations

36.2.3.1 MOSH, and FSSM

36.2.4 Standards

36.2.4.1 CG Coatings Standards , coating manufacturer's specifications

36.2.5 Quality Assurance Standards

36.2.5.1 CG Coatings Standards, Independent consultant.

36.3 Technical

36.3.1 Manhole Locations

No 1 Void WB Tank Stbd	Prop Mtr Room aft bulkhead.
No 1 Void WB Tank Port	Prop Mtr Room aft bulkhead.
No 2 Void Stbd	Pipe Tunnel
No 2 Void Port	Pipe Tunnel
No 3 Void Stbd	Pipe Tunnel
No 3 Void Port	Pipe Tunnel
No 4 Wing Void Tank Stbd	Lower Bubbler Compt.
No 4 Wing Void Tank Port	Lower Bubbler Compt.
Fwd Cofferdam	Eng Room fwd.
Aft Cofferdam	Prop Motor Room upper level aft
Pipe Tunnel	Eng Room fwd.

36.3.2 The Void spaces are skin tanks, access holes through the ship's hull may be required to facilitate the specified work. All costs associated with this must be included in the bid. This will include providing a written repair plan including weld procedures acceptable to TCMS and also include internal tank coating touch-up in way of welding.

36.3.3 All vents and transducers and related equipment are to be blanked or otherwise protected prior to and during cleaning, blasting and painting activity.

36.3.4 All internal surfaces of the void spaces are to be high pressure water washed (min 3,000 psi fresh water) with a mixture of 50:1 Holdtight 102® Solution from Vapcor Inc.(contractor supplied) or equivalent. This action will de-salinate all surfaces and prevent flash rusting, while removing all loose deposits to allow viewing of tank/coating condition. The Contractor will be responsible for removal and disposal of all cleaning water, sludge and debris generated by cleaning process.

36.3.5 Hold for inspection of tanks by owner's representative and CG retained consultant and TCMS surveyor prior to further cleaning. The amount of areas (square meters) of bare steel to be abrasive blasted will be determined at this point.

36.3.6 All areas of bare steel in tanks are to be abrasive blast cleaned to minimum SSPC-SP6 (ISO 8501-1:1988). The Contractor will be responsible for removal and disposal of all debris generated by abrasive blast process.

For bidding purposes: The Contractor is to bid the percentages of total areas as described and provide a unit cost/ m^2 for adjustment of blast and coating requirement.

36.3.7 #4 Void port and stbd. The coating in these void spaces is considered as good. The surface area in each void space is 647 m^2. The Contractor is quote on blast cleaning 25% or 162 m^2 in each void. It is expected most of this area will be on the void space bottom plating.

36.3.8 #3 Void port and stbd. The coating in these void spaces is considered as good except on bottom plating against inner bulkhead where it was found poor and general corrosion was noted. The surface area in each void space is 122 m^2. The Contractor is quote on blast cleaning 25% or 30.5 m^2 in each void.

36.3.9 #2 Void port and stbd. The coating in these void spaces is considered as good except on bottom plating against inner bulkhead where it was found poor and general corrosion was noted. The surface area in each void space is 208 m^2. The Contractor is quote on blast cleaning 25% or 52 m^2 in each void.

36.3.10 #1 Void port and stbd. The coating in these void spaces is considered as fair throughout, mostly flaking and peeling. No corrosion present. The stbd #1 void is used as a bilge retention tank The surface area in each void space is 745 m^2. The Contractor is quote on blast cleaning 50% or 373 m^2 in each void.

36.3.11 Fwd Cofferdam. The tank coating was considered good except in bottom plating in way of centre bays where general corrosion found. The surface area in the cofferdam space is 134 m^2. The Contractor is quote on blast cleaning 25% or 34 m^2 in the Cofferdam.

36.3.12 Aft Cofferdam. The tank coating was considered good throughout. The surface area in the cofferdam space is 174 m^2. The Contractor is quote on blast cleaning 25% or 44 m^2 in the Cofferdam.

36.3.13 Pipe Tunnel. The tank coating was considered good throughout. The Contractor is quote on blast cleaning 25% or 200 m^2 in the Pipe Tunnel.

36.3.14 Hold for inspection of void spaces by owner's representative and CG retained consultant prior to coating.

36.3.15 The entire surface of the void spaces is to be treated with Royal coatings Easy Prep or equivalent as per the manufacturer's data sheet. Then high pressure water washed (min 3,000 psi fresh water). See. This will etch the surfaces and prepare the intact existing epoxy coatings for re-coating.

36.3.16 If flash rusted to worse than Grade HB2M (refer to International Hydro-blasting Standards) between blasting and application of coatings, the surface will be re-blasted to the specified standard.

36.3.17 All areas of bare metal are to be given (1) coat of WASSER MC-Miozinc 100 or equivalent as per paint manufacturer's instructions for mixing, ventilation, application and precautions at 3 to 5 mils D.F.T.

36.3.18 Hold for inspection of void spaces by owner's representative and CG retained consultant prior to re-coating.

36.3.19 An intermediate coat of WASSER MC-Tar 100 Red or equivalent is to be applied to 100% of the void space surface at 5 to 7 mils D.F.T33.3.20 Hold for inspection of void spaces by owner's representative and CG retained consultant.

36.3.21 A final coat of WASSER MC-Ballast Coat beige or equivalent is to be applied to 100% of the void space surface at 4 mils D.F.T. 33.3.22 Hold for inspection of void spaces by owner's representative and CG retained consultant.

36.3.23 Any hull removals are to be re-welded in place. Inspected and tested to the satisfaction of attending TCMS Surveyor.

36.3.24 Void spaces coatings to be repaired in way of welds.

36.3.25 Strum boxes to have strainers cleaned and replaced in good order. Strum box wells to be cleaned of all dirt and debris.

36.3.26 The void spaces level transducers are to be proven operational in the presence of the Chief Engineer or delegate.

36.3.27 Hold for inspection of void spaces by owner's representative prior to closing up.

36.3.28 The contractor is to disassemble the void spaces vent heads from each tank, clean and lay out the components for inspection by TCMS Surveyor and the Chief Engineer.

33.3.29 Following inspection the vent heads are to be reassembled in good order using anti-seizing compound on all fastener threads.

36.3.30 Void spaces to be closed up in good order, using new ¼" neoprene gaskets on all manholes. All fasteners are to be coated with an approved anti-seize compound. Power tools are **not** to be used to tighten the manhole fasteners.

36.3.31 Vent heads to be replaced in good order following testing in 36.4.2. All fasteners are to be coated with an approved anti-seize compound.

36.4 Proof of Performance

36.4.1 Inspections

36.4.1.1 Inspections by owner's representative and CG retained consultant and TCMS surveyor as detailed above.

36.4.1.2 NACE inspector will be required to inspect the all components for surface preparation and for each of the applications of the coating system including enviromentals, equipment, mixing and application processes. It is the contractors responsibility to arrange for the NACE inspector to be present at the required times to inspect the preparation and applications. Coating at each stage will also be to the satisfaction of the chief engineer or designate.

36.4.2 Testing /Trials

36.4.2.1 Hydrostatic and/or air test as required by TCMS.

36.4.2.2 The Contractor is to quote separately the cost of each of the following:

36.4.2.3 The Contractor is to hydrostatically test the void spaces to the satisfaction of the attending TCMS surveyor, and the Chief Engineer. Void spaces to be pumped dry and water disposed of by the Contractor upon completion of test.

36.4.2.4 The Contractor is to perform an air test on all void spaces using an open ended manometer to the satisfaction of the TCMS surveyor and the Chief Engineer.

36.4.2.5 All void space vents and bilge level alarms are to be proven operational in the presence of the Chief Engineer or delegate.

36.4.3 Certification

36.4.3.1 TCMS credit for Void Spaces.

36.5 Deliverables

36.5.1 Documentation (Reports/Drawings/Manuals)

36.5.1.1 The Contractor shall provide the Chief Engineer with a report in both electronic (.pdf) and hardcopy formats of the Contractors work outlining the surface area abrasive blasted, quantity of coatings applied, and any alterations / repairs made prior to the acceptance of this item.

36.5.1.2 The Contractor shall provide the Chief Engineer with a completed copy of all Safety Management System forms and permits for this item.

36.5.1.3 The Contractor shall provide the Chief Engineer with a typewritten report in both electronic (.pdf) and hardcopy formats of the NDT testing on any required access openings.

36.5.1.4 The Contractor will provide written proof of TCMS survey credit for the tanks utilizing TCMS Survey Record book upon the completion of the work. TCMS Survey Record Book will be provided to the successful Contractor by the Chief Engineer.

36.5.2 Spares

36.5.2.1 N/A.

36.5.3 Training

36.5.4 N/A.

37.0 CHAIN LOCKER COATINGS

37.1 Identification (CI #25)

37.1.1 The intent of this item is to clean, inspect, coat and obtain TCMS credit for the chain locker.

The chain locker is considered a confined space under the Coast Guard Safety Management System.

Coast Guard will be retaining the services of an independent consultant to verify that the surface preparation and coating; storage, preparation, and application are as per this specification and coating manufacturer's specifications.

Payment for the consultant will be directly by Coast Guard outside of this contract.

37.2 References

37.2.1 Equipment Data

37.2.1.1 The chain Locker is located below the raised Forecastle Deck between frames 184 – 192/195. Access to the Chain Locker is via a deck hatch at frame 192 CL located in the Bosun's Stores.

The surface area in each side of the chain locker is 75 m^2 for a total surface area of both sides of 150 m^2.

37.2.2 Drawings

Drawing Number	Description	Electronic Number
13-0077-01	Main Deck General Arrangement	
HFX1300125 rev1	CCGS Henry Larsen Condition Assessment Report page 53	

37.2.3 Regulations

37.2.3.1 MOSH, and FSSM

37.2.4 Standards

37.2.4.1 CG Coatings Standards , coating manufacturer's specifications

37.2.5 Quality Assurance Standards

37.2.5.1 CG Coatings Standards, Independent consultant.

37.3 Technical

37.3.1 The Chain Locker is to be opened for cleaning, painting and inspection.

The Contractor is to ensure protection for the Bosun's Store and all items within the fo'c'sle from damage or overspray caused by this item.

37.3.2 False floor gratings are to be released and lifted clear by contractor prior to commencing cleaning and painting.

37.3.3 All sand, mud, and other loose material to be removed ashore. Mud boxes and strainers are to be cleaned and proven clear. All internal surfaces including the false floor gratings are to be high pressure water washed (min 3,000 psi fresh water) with a mixture of 50:1 Holdtight 102® Solution from Vapcor Inc.(contractor supplied) or equivalent. This action will de-salinate all surfaces and prevent flash rusting, while removing all loose deposits to allow viewing of tank/coating condition. The Contractor will be responsible for removal and disposal of all cleaning water, sludge and debris generated by cleaning process.

37.3.4 Hold for inspection of Chain Locker by owner's representative and CG retained consultant and TCMS surveyor prior to further cleaning. The amount of areas (square meters) of bare steel to be abrasive blasted will be determined at this point.

37.3.5 All areas of bare steel in tanks are to be abrasive blast cleaned to minimum SSPC-SP6 (ISO 8501-1:1988). Quote 75 m^2 of bare steel total for both sides of the chain locker. Include unit cost for each additional m^2. The Contractor will be responsible for removal and disposal of all debris generated by abrasive blast process.

37.3.6 Hold for inspection of Chain Locker by owner's representative and CG retained consultant prior to coating.

37.3.7 The entire surface of the chain locker including the false floors is to be treated with Royal coatings Easy Prep or equivalent as per the manufacturer's data sheet. Then high pressure water washed (min 3,000 psi fresh water). This will etch the surfaces and prepare the intact existing epoxy coatings for re-coating.

37.3.8 Hold for inspection of Chain Locker by owner's representative and CG retained consultant prior to coating.

37.3.9 If flash rusted to worse than Grade HB2M (refer to International Hydro-blasting Standards) between blasting and coating application, the surface will be re-blasted to the specified standard.

37.3.10 All areas of bare metal including any on the false floor gratings are to be given (1) coat of WASSER MC-Miozinc 100 or equivalent as per paint manufacturer's instructions for mixing, ventilation, application and precautions at 3 to 5 mils D.F.T.

37.3.11 Hold for inspection of Chain Locker by owner's representative and CG retained consultant prior to re-coating.

37.3.12 An intermediate coat of WASSER MC-Tar 100 Red or equivalent is to be applied to 100% of the Chain Locker surfaces including the false floor gratings at 5 to 7 mils D.F.T.

37.3.13 Hold for inspection of void spaces by owner's representative and CG retained consultant.

37.3.14 A final coat of WASSER MC-Ballast Coat beige or equivalent is to be applied to 100% of the Chain Locker surfaces including the false floor gratings at 4 mils D.F.T.

37.3.15 Hold for inspection of Chain Locker by designated owner's representative.

37.3.16 Mud boxes and strainers are to be reassembled using anti-seizing compound on all fasteners and proven clear.

37.3.17 False floor gratings are to be reinstalled using all new stainless steel fasteners. Anti-seizing compound is to be used on all fasteners.

37.4 Proof of Performance

37.4.1 Inspections

37.4.1.1 Inspections by owner's representative and CG retained consultant and TCMS surveyor as detailed above.

37.4.1.2 NACE inspector will be required to inspect the all components for surface preparation and for each of the applications of the coating system including enviromentals, equipment, mixing and application processes. It is the contractors responsibility to arrange for the NACE inspector to be present at the required times to inspect the preparation and applications. Coating at each stage will also be to the satisfaction of the chief engineer or designate.

37.4.2 Testing/Trials

37.4.2.1 Chain locker bilge piping system proven clear.

37.4.3 Certification

37.4.3.1 TCMS credit for chain locker.

37.5 Deliverables

37.5.1 Documentation (Reports/Drawings/Manuals)

37.5.1.1 The Contractor shall provide the Chief Engineer with a report in both electronic (.pdf) and hardcopy formats of the Contractors work outlining the quantity of coatings applied, and any alterations / repairs made prior to the acceptance of this item.

37.5.1.2 The Contractor shall provide the Chief Engineer with a completed copy of all Safety Management System forms and permits for this item prior to the initiation of work.

37.5.1.3 The Contractor will provide written proof of TCMS survey credit for the tanks utilizing TCMS Survey Record book upon the completion of the work. TCMS Survey Record Book will be provided to the successful Contractor by the Chief Engineer.

37.5.2 Spares

37.5.2.1 N/A.

37.5.3 Training

37.5.3.1 N/A.

38.0 POTABLE WATER TANKS

38.1 Identification (CI #42)

38.1.1 The intent of this item is to clean, inspect, coat and obtain TCMS credit for the Potable Water Tanks.

38.1.2 The Potable Water Tanks are considered confined spaces under the Coast Guard Safety Management System.

38.1.3 Coast Guard will be retaining the services of an independent consultant to verify that the surface preparation and coating; storage, preparation, and application and curing are as per this specification and coating manufacturer's specifications and manufacturer's Application Guidelines.

38.1.4 Payment for the consultant will be directly by Coast Guard outside of this contract.

38.1.5 The Contractor shall arrange scheduling of TCMS surveyors as required.

38.2 References

38.2.1 Equipment Data

38.2.1.1

Tank	Location.	Capacity m^3	Field No
Port Domestic Tank	Fr 13 - 27	95	3L008
Stbd Domestic Tank	Fr 13 - 27	80	3L009

38.2.2 Drawings

Drawing Number	Description	Electronic Number
13-079-01	Capacity Plan	
15-0206-01	W.T. hatches and Manholes	
HFX1300125 rev1	CCGS Henry Larsen Condition Assessment Report	
22-0733-01 sht 1 and 2	Vents and Sounding Arrgt	

38.2.3 Regulations

38.2.3.1 MOSH, and FSSM

38.2.4 Standards

38.2.4.1 MOSH, and FSSM CCG Fleet Safety manual,

38.2.4.2 7.A.12 - POTABLE WATER QUALITY

38.2.5 Quality Assurance Standards

38.2.5.1 CG Paint and Coatings Standard **18-080-000-SG-003** (formerly DFO/5884 - TP 12445E),

38.2.5.2 Independent consultant.

38.2.5.3 CCG Fleet Safety manual, 7.A.12 - POTABLE WATER QUALITY

38.3 Technical

38.3.1

Tank	Manhole Locations
Fresh Water Tank Port	Helicopter Fuel Pump Room and Aft Cofferdam
Fresh Water Tank Stbd	Helicopter Fuel Pump Room and Aft Cofferdam

38.3.2 All vents and transducers and related equipment are to be blanked or otherwise protected prior to and during cleaning, blasting and painting activity.

38.3.3 Contractor will pump out the water from each tank and any water accumulated during the cleaning and flushing periods. Contractor to bid on unit price for each cubic meter of water removed from tank.

38.3.4 All contractor personnel shall be outfitted with appropriate disposable work clothing and protective safety boot covers (contractor supplied) to be worn at all times within these tanks. The admission of contaminants to the tank internals shall be minimized in this fashion due to worker activity within these tanks.

38.3.4 All internal surfaces of the tanks are to be H.P. water blasted clean (min 3,000 psi fresh water) and wiped clean. All surfaces are to be cleaned of all loose paint, scale, salt deposits, dirt and any other debris. All debris to be removed from tanks and disposed of ashore.

38.3.5 Hold for inspection of tanks by owner's representative and CG retained consultant and TCMS surveyor prior to further cleaning. The amount of areas (square meters) of bare steel to be power tool cleaning will be determined at this point.

38.3.6 All areas of bare steel in tanks are to be power tool cleaned to minimum SSPC-SP 3.

38.3.7 Tanks are then to be thoroughly cleaned and wiped down to remove any and all grit, dirt, debris, and any other solid or liquid contamination that may be present, prior to coating application.

38.3.8 Hold for inspection of tanks by owner's representative and CG retained consultant prior to coating.

38.3.9 The coating in these tanks is considered as good. The Contractor is quote on power tool cleaning and coating 30 m^2 per tank for a total of 60 m^2. Quote unit cost per m^2. To be adjusted up or down by 1379 action.

38.3.10 All disturbed areas shall be coated with one coat to 3-5 mils DFT of Royal Coatings EasyPrime or equivalent to all prepared steel.

38.3.11 Any sharp edges within the prepared areas shall be stripe coated with EasyFlex.

38.3.12 Apply one top coat of Royal Coatings EasyFlex or equivalent to all primed areas to a thickness of 8-12 mils DFT. Runs and sags in the applied coating should be left alone.

38.3.13 Allow the coating to cure for a minimum of 48 hours @ 20ºC or above. At lower temperatures let cure for a minimum of 72 hours.

38.3.14 Following application the coating is to be allowed to cure fully with appropriate climate conditions as per the manufacturer's instructions.

38.3.15 The Contractor is to take and record the climatic conditions daily and ensure the required climatic conditions are maintained during the curing period.

38.3.16 Following the curing process hold for inspection of tanks by owner's representative and CG retained consultant.

38.3.17 The Contractor shall prove the tank sounding pipes / tank inlets and outlets and pump suction strainers are free in the presence of the Chief Engineer or delegate.

38.3.18 The tank level transducers are to be proven operational in the presence of the Chief Engineer or delegate.

38.3.19 The Contractor is to disassemble the tanks vent heads from each tank, clean and lay out the components for inspection by TCMS Surveyor and the Chief Engineer.

38.3.20 Following inspection the vent heads are to be reassembled in good order using anti-seizing compound on all fastener threads.

38.3.21 Hold for inspection of tanks by owner's representative prior to closing up.

38.3.22 The tanks are to be closed up in good order, using new ¼" neoprene gaskets on all manholes. All fasteners are to be coated with an approved anti-seize compound.

38.3.23 Vent heads to be replaced in good order following testing in 38.4.2. All fasteners are to be coated with an approved anti-seize compound

38.4 Proof of Performance

38.4.1 Inspections

38.4.1.1 Inspections by owner's representative and CG retained consultant and TCMS surveyor as detailed above.

38.4.1.2 NACE inspector will be required to inspect the all components for surface preparation and for each of the applications of the coating system including enviromentals, equipment, mixing and application processes. It is the contractors responsibility to arrange for the NACE inspector to be present at the required times to inspect the preparation and applications. Coating at each stage will also be to the satisfaction of the chief engineer or designate.

38.4.2 Testing/Trials

38.4.2.1 Hydrostatic test as required by TCMS.

38.4.2.2 The Contractor is to hydrostatically test the tanks to the satisfaction of the attending TCMS surveyor, and the Chief Engineer.

38.4.2.5 All tank vents and level transducers are to be proven operational in the presence of the Chief Engineer or delegate as per para 38.3.20 and 38.3.21.

38.4.2.6 The Contractor shall use an independent laboratory that has been accredited for the purpose of testing water quality to super chlorinate (disinfect) the tanks and ship's potable water distribution system as per procedure set out in the Fleet Safety Manual 7.F.12 Potable Water Quality, Section 3.5 Disinfection para (b). Contractor shall then dispose of the super chlorinated water in the tank as per applicable provincial regulations.

38.4.2.7 The Contractor shall refill and drain the tanks with fresh water two (2) more times for flushing of the tanks.

38.4.2.8 The Contractor shall re-fill the tanks with fresh water for the final time.

38.4.2.9 The contractor shall use an independent laboratory that has been accredited for the purpose of testing water quality to take a sample of water from each of the potable water tanks and test as per the testing parameters (28) set out in the Fleet Safety Manual 7.F.12 Potable Water Quality sect 3.6 para (g).

38.4.3 Certification

38.4.3.1 TCMS credit for the tanks.

38.4.3.2 Laboratory results showing Acceptable values from the Guidelines for Canadian Drinking Water Quality (http://www.hc-sc.gc.ca/ewh-semt/water-eau/drink-potab/guide/index-eng.php)

38.5 Deliverables

38.5.1 Documentation (Reports/Drawings/Manuals)

38.5.1.1 The Contractor shall provide the Chief Engineer with report in both electronic (.pdf) and hardcopy formats of the Contractors work outlining the surface area power tool cleaned, quantity of coatings applied, record of climatic conditions during application and curing and any alterations / repairs made prior to the acceptance of this item.

38.5.1.2 The Contractor shall provide the Chief Engineer with a completed copy of all Safety Management System forms and permits for this item.

38.5.1.3 The Contractor shall provide the Chief Engineer with a report in both electronic (.pdf) and hardcopy formats of the Laboratory results showing Acceptable values from the Guidelines for Canadian Drinking Water Quality

38.5.1.4 The Contractor will provide written proof of TCMS survey credit for the tanks utilizing TCMS Survey Record book upon the completion of the work. TCMS Survey Record Book will be provided to the successful Contractor by the Chief Engineer.

38.5.2 Spares

38.2.1 N/A.

38.5.3 Training

38.5.3.1 N/A.

39.0 MAST COATINGS

39.1 Identification (CI #29)

39.1.1 The intent of this item is to properly prepare the forward and after masts, and coat them. The total surface area of this item is approximately 250 m^2. The forward mast 160 m^2, and the after mast 90 m^2.

All antennas, navigation lights, search lights, wire cables, and other fittings are to be protected from damage during surface preparation and from paint during the coating process.

39.1.2 Coast Guard will be retaining the services of an independent consultant to verify that the surface preparation and coating; storage, preparation, and application are as per the specification.

Payment for the consultant will be directly by Coast Guard outside of this contract.

39.1.3 The Contractor is to allow safe access to areas where work is being performed under this specification including storage and mixing areas as the consultant deems necessary for the purpose of verifying that the surface preparation and coating; storage, preparation, and application are as per the specification.

39.2 References

39.2.1 Equipment Data

39.2.1.1 The total surface area of this item is approximately 250 m^2. The forward mast 160 m^2, and the after mast 90 m^2.

39.2.2 Drawings

Drawing Number	Description	Electronic Number

39.2.3 Regulations

39.2.3.1 MOSH, and FSSM

39.2.4 Standards

39.2.4.1 MOSH, and FSSM CCG Fleet Safety manual

39.2.4.2 As per manufacturer's recommendations.

39.2.5 Quality Assurance Standards

39.2.5.1 CG Paint and Coatings Standard **18-080-000-SG-003** (formerly DFO/5884 - TP 12445E),

39.2.5.2 Independent consultant.

39.2.5.3 All signs and tags affixed to structures to be coated must be protected so that paint does not get on them.

39.3 Technical

39.3.1 The contractor is to quote on Ultra High Pressure Blasting (minimum 40,000 psi) or Grit Blasting 20% (50 m²) of the area identified by this item to minimum SSPC-SP-10 (Sa 2-1/2) or SSPC-WJ-1 with the edges feathered back to a firm edge.

39.3.2 In areas where Ultra High Pressure Blasting or Grit Blasting is not possible due to the proximity of sensitive equipment, surface preparation may be completed by power tooling to minimum SSPC-SP-3.

39.3.3 If oxidation occurs between surface preparation and application of Amerlock 400, the surface must be returned to the specified visual standard prior to application of Amerlock 400.

39.3.4 The Contractor is to quote a unit cost per square metre for surface preparation by the various means requested.

39.3.5 Prior to the application of any coating, the Contractor is to remove from the vessel all traces of dirt and debris created by the surface preparation. The Contractor shall be responsible for ensuring that all surfaces to be painted are clear and clean, prior to, during and immediately after the application of the coatings.

39.3.6 Hold for inspection of the masts by Owner's Representative, Contractor's Representative and CG retained consultant prior to coating. The afore mentioned parties are to agree to areas for coating. Any adjustment will be by 1379 action.

Forward Mast

39.3.7 For the forward mast, the Contractor is to quote on applying two coats of Contractor supplied Amerlock 400 and two coats of Contractor supplied Matchless 732 Dory Buff.

39.3.8 The first coat, Amerlock 400 Grey, shall be applied at 6-8 mils D.F.T. to cover prepared areas of bare steel (approximately 32 m^2).

39.3.9 Hold for inspection of the mast by Owner's Representative.

39.3.10 The second coat shall be Amerlock 400 Yellow and shall be applied at 6-8 mils D.F.T. to cover the Amerlock 400 Grey (approximately 32 m^2).

39.3.11 Hold for inspection of the masts by Owner's Representative.

39.3.12 The first coat of Matchless 732 Dory Buff shall be applied to cover the Amerlock 400 Yellow (approximately 32 m^2).

39.3.13 The second coat is to be a full coat applied to the total area (approximately 160 m^2).

39.3.14 The Contractor is to quote a unit cost per square metre for the application of the two coats of Amerlock 400 and the first coat of Matchless 732 Dory Buff.

Aft Mast

39.3.15 Contractor is to quote on applying two coats of Contractor supplied Amerlock 400 and two coats of Contractor supplied Matchless 732 Dory Buff or Matchless 708 Black as required.

39.3.16 The first coat, Amerlock 400 Grey, shall be applied at 6-8 mils D.F.T. to cover prepared areas of bare steel (approximately 18 m^2).

39.3.17 Hold for inspection of the mast by Owner's Representative.

39.3.18 For the upper portion of the mast, the second coat shall be Amerlock 400 Black and shall be applied at 6-8 mils D.F.T. to cover the Amerlock 400 Grey (approximately 6 m^2).

39.3.19 The first coat of Matchless 708 Black shall be applied to cover the Amerlock 400 Black (approximately 6 m^2).

39.3.20 The second coat is to be applied to the total area (approximately 30 m^2).

39.3.21 For the lower portion of the mast, the second coat shall be Amerlock 400 Yellow and shall be applied at 6-8 mils D.F.T. to cover the Amerlock 400 Grey (approximately 12 m^2).

39.3.22 The first coat of Matchless 732 Dory Buff shall be applied to cover the Amerlock 400 Yellow (approximately 12 m^2).

39.3.23 The second coat is to be applied to the total area (approximately 60 m^2).

39.3.24 The Contractor is to quote a unit cost per square metre for the application of the two coats of Amerlock 400 and the first coat of Matchless 32 Dory Buff or Matchless 708 Black as required.

39.4 Proof of Performance

39.4.1 Inspections

39.4.1.1 Inspections by owner's representative and CG retained consultant and TCMS surveyor as detailed above.

39.4.1.2 NACE inspector will be required to inspect the all components for surface preparation and for each of the applications of the coating system including enviromentals, equipment, mixing and application processes. It is the contractors responsibility to arrange for the NACE inspector to be present at the required times to inspect the preparation and applications. Coating at each stage will also be to the satisfaction of the chief engineer or designate.

39.4.2 Testing/Trials

39.4.2.1 DFT Tests to verify.

39.4.3 Certification

39.4.3.1 All coatings used are to be Marine Grade.

39.5 Deliverables

39.5.1 Documentation (Reports/Drawings/Manuals)

39.5.1.1 The Contractor shall provide the Chief Engineer with a report in both electronic (.pdf) and hardcopy formats of the Contractors work outlining the surface area power tool cleaned, quantity of coatings applied, record of climatic conditions during application and curing and any alterations / repairs made prior to the acceptance of this item.

39.5.1.2 The Contractor shall provide the Chief Engineer with a completed copy of all Safety Management System forms and permits for this item.

39.5.2 Spares

39.5.2.1 N/A.

39.5.3 Training

39.5.3.1 N/A.

40.0 SUPERSTRUCTURE COATINGS

40.1 Identification (CI #29)

40.1.1 The intent of this item is to properly prepare the Upper Deck superstructure, overhead area, bulwarks, stanchions, vents, piping, and other fittings from the stern to and including the weather doors at frame 145, and coat them. The total surface area of this item is approximately 1600 m^2.

40.1.2 Coast Guard will be retaining the services of an independent consultant to verify that the surface preparation and coating; storage, preparation, and application are as per the specification.
Payment for the consultant will be directly by Coast Guard outside of this contract.

40.1.3 The Contractor is to allow safe access to areas where work is being performed under this specification including storage and mixing areas as the consultant deems necessary for the purpose of verifying that the surface preparation and coating; storage, preparation, and application are as per the specification.

40.2 References

40.2.1 Equipment Data

40.2.1.1 Upper deck superstructure

40.2.2 Drawings

Drawing Number	Description	Electronic Number

40.2.3 Regulations

40.2.3.1 N/A.

40.2.4 Standards

40.2.4.1 The Contractor shall adhere to manufactures instructions for surface preparation and coating application.

40.2.5 Quality Assurance Standards

40.2.5.1 As per the Contractor s Quality Assurance Program.

40.3 Technical

40.3.1 Coast Guard will be retaining the services of an independent NACE consultant to verify that the surface preparation and coating; storage, preparation, and application are as per the specification.

40.3.2 Payment for the consultant will be directly by Coast Guard outside of this contract.

40.3.3 The Contractor is to allow safe access to areas where work is being performed under this specification including storage and mixing areas as the consultant deems necessary for the purpose of verifying that the surface preparation and coating; storage, preparation, and application are as per the specification.

40.3.4 All superstructure windows and electrical fixtures and fittings are to be protected against damage during surface preparation and are to be cleaned of any paint upon completion of the work.

40.3.5 The contractor is to quote on Ultra High Pressure Blasting (minimum 40,000 psi) or Grit Blasting of 20% (320 m^2) of the area identified by this item to minimum SSPC-SP-10 (Sa 2-1/2) or SSPC-WJ-1 with the edges feathered back to a firm edge. If oxidation occurs between blasting and application of Amerlock 400, the surface must be re-blasted to the specified visual standard prior to application of Amerlock 400. The Contractor is to quote a unit cost per square metre for surface preparation.

40.3.6 Prior to the application of any coating, the Contractor is to remove from the vessel all traces of dirt and debris created by the surface preparation. The Contractor shall be responsible for ensuring that all surfaces to be painted are clear and clean, prior to, during and immediately after the application of the coatings.

40.3.7 Contractor is to quote on applying two coats of Contractor supplied Amerlock 400 and two coats of Contractor supplied Matchless 700 White. The first coat, Amerlock 400 Grey, shall be applied at 6-8 mils D.F.T. to cover prepared areas of bare steel (approximately 320 m2). The second coat shall be Amerlock 400 White and shall be applied at 6-8 mils D.F.T. to cover the Amerlock 400 Grey (approximately 320 m2). The first coat of Matchless 700 White shall be applied to cover the Amerlock 400 White (approximately 320 m2) and the second coat is to be applied to the total area (approximately 1600 m2). The Contractor is to quote a unit cost per square metre for the application of the two coats of Amerlock 400 and the first coat of Matchless 700 White.

40.3.8 All signs and tags affixed to structures to be coated must be protected so that paint does not get on them.

40.3.9 The Contractor is to quote a unit cost per square metre for surface preparation and for each coating which will be adjusted by PWGSC 1379 action where needed.

40.4 Proof of Performance

40.4.1 Inspections

40.4.1.1 NACE inspector will be required to inspect the all components for surface preparation and for each of the applications of the coating system including enviromentals, equipment, mixing and application processes. It is the contractors responsibility to arrange for the NACE inspector to be present at the required times to inspect the preparation and applications. Coating at each stage will also be to the satisfaction of the Chief Engineer or designate.

40.4.2 Testing/Trials

40.4.2.1 Surface preparation is to be tested to ensure the desired profile and cleanliness is reached.

40.4.2.2 DFT is to be measured on each coating system application to ensure manufacturer's instructions have been met.

40.4.3 Certification

40.4.3.1 N/A.

40.5 Deliverables

40.5.1 Documentation (Reports/Drawings/Manuals)

40.5.1.1 The contractor shall supply copies of all Paint coating MSDS and technical data sheets.

40.5.1.2 The Contractor shall provide to the Chief Engineer and NACE inspector, before the coating is applied, the following information sheets regarding the coating used:

- Working procedures sheets
- Product data sheets
- Material Safety Data Sheets

40.5.1.3 The contractor shall record and document all test results including verification of the following:

- Surface preparation standard reached.
- Environmental readings, before, during and after each application.
- DFT results achieved between coating application.

40.5.2 Spares

40.5.2.1 N/A.

40.5.3 Training

40.5.3.1 N/A.

41.0 BOAT DECK COATINGS

41.1 Identification (CI # 28)

41.1.1 The intent of this item is to properly prepare the Boat Deck surface and apply two coats of Amerlock 400 to the prepared surface area. The total surface area of the Boat Deck is approximately 800 m2.

41.2 References

41.2.1 Equipment Data

41.2.1.1 Boat Deck

41.2 Drawings

Drawing Number	Description	Electronic Number

41.2.3 Regulations

42.2.3.1 N/A.

41.2.4 Standards

41.2.4.1 Contractor is to follow the recommendations of on-site NACE Inspector and to stay within the guidelines of the coating manufacture recommended application procedures.

41.2.5 Quality Assurance Standards

41.2.5.1 As per the Contractors QA program.

41.3 Technical

41.3.1 Coast Guard will be retaining the services of an independent NACE consultant to verify that the surface preparation and coating; storage, preparation, and application are as per the specification.

41.3.2 Payment for the consultant will be directly by Coast Guard outside of this contract.

41.3.3 The Contractor is to allow safe access to areas where work is being performed under this specification including storage and mixing areas as the consultant deems necessary for the purpose of verifying that the surface preparation and coating; storage, preparation, and application are as per the specification.

41.3.4 The contractor is to quote on Ultra High Pressure Blasting (minimum 40,000 psi) or Grit Blasting of 20% (160 m²) of the area identified by this item to minimum SSPC-SP-10 (Sa 2-1/2) or SSPC-WJ-1 with the edges feathered back to a firm edge. If oxidation occurs between blasting and application of Amerlock 400, the surface must be re-blasted to the specified visual standard prior to application of Amerlock 400. The Contractor is to bid on a total surface area of the Boat Deck which is approximately 800 m2. The Contractor is to quote a unit cost per square metre for surface preparation to be adjusted by PWGSC 1379 action.

41.3.5 Prior to the application of any coating, the Contractor is to remove from the vessel all traces of dirt and debris created by the surface preparation. The Contractor shall be responsible for ensuring that all surfaces to be painted are clear and clean, prior to, during and immediately after the application of the coatings.

41.3.6 Contractor is to quote on applying two coats of Contractor supplied Amerlock 400. The first coat, Amerlock 400 White, shall be applied at 6-8 mils D.F.T. to cover prepared areas of bare steel (approximately 160 m2). The second coat shall be Amerlock 400 Grey and shall be applied at 6-8 mils D.F.T. to cover the Amerlock 400 White (approximately 160 m2). The Contractor is to bid on a total surface area of the Boat Deck which is approximately 800 m2. The Contractor is to quote a unit cost per square metre for the application of the two coats of Amerlock 400 to be adjusted by PWGSC 1379 action.

41.4 Proof of Performance

41.4.1 Inspection

41.4.1.1 NACE inspector will be required to inspect the all components for surface preparation and for each of the applications of the coating system including enviromentals, equipment, mixing and application processes. It is the contractors responsibility to arrange for the NACE inspector to be present at the required times to inspect the preparation and applications. Coating at each stage will also be to the satisfaction of the chief engineer or designate.

41.4.2 Testing/Trials

41.4.2.1 Surface preparation is to be tested to ensure the desired profile and cleanliness is reached.

41.4.2.2 DFT is to be measured on each coating system application to ensure manufacturer's instructions have been met.

41.4.3 Certification

41.4.3.1 N/A.

41.5 Deliverables

41.5.1 Documentation (Reports/Drawings/Manuals)

41.5.1.1 The contractor shall supply copies of all Paint coating MSDS and technical data sheets.

41.5.1.2 The Contractor shall provide to the Chief Engineer and NACE inspector, before the coating is applied, the following information sheets regarding the coating used:

- o Working procedures sheets
- o Product data sheets
- o Material Safety Data Sheets

41.5.1.3 The contractor shall record and document all test results including verification of the following:

- Surface preparation standard reached.
- Environmental readings, before, during and after each application.
- DFT results achieved between coating application.

41.5.2 Spares

41.5.2.1 N/A.

41.5.3 Training

41.5.3.1 N/A.

42.0 ESCAPE HATCHES

42.1 Identification (CI # 7)

42.1.1 The intent of this specification is to remove the 5 exterior escape hatches and replace 4 with new and plate over the opening of the 5th. All hatches contractor supply.

42.1.2 The following to be completed in conjunction with the following specs.

- VLE CI #39 Asbestos Remediation
- VLE CI #28 External Deck Coatings

42.2 References

42.2.1 Equipment Data

42.2.1.1 Hatches are 24" X 24" with a 24" coaming. Hatches are weathertight with central wheel suitable for Load line position 1.

42.2.2 Drawings

Drawing Number	Description	Electronic Number
15-0206-01	Manholes and Watertight hatches	

42.2.3 Regulations

42.2.3.1 All work performed and any modifications made, must be compliant with the latest Canada Shipping Act Regulations and in particular to the Marine Machinery Regulations. All work shall meet Transport Canada approved class regulations.

42.2.4 Standards

42.2.4.1 Contractor to provide an approved weld procedure for the hatch replacements and deck insert plate.

42.2.4.2 Fleet Safety and Security Manual DFO/5737

42.2.5 Quality Assurance Standards

42.2.5.1 As per the Contractors QA Program.

42.3 Technical

42.3.1 The following hatches are to be removed, Foc'sle escape hatch, Fwd Stores escape hatch, Steering flat escape hatch, Helicopter pump room hatch and CO2 room hatch. All hatch removals shall be carried as per the following specification.

42.3.2 All items required for the completion of this item are to be contractor supply unless specified otherwise. Contractor supplied hatches to have a 24" X 24" clear opening with an above deck coaming length of 24". Hatches to be fitted with a central wheel and are to be weather tight suitable for Load line position 1.

42.3.3 The insulation shall be removed from the deck heads, below the hatches, to allow access to the bottom side of the hatch. *Note there is asbestos in the fire stop spray on much of the insulation onboard, proper removal and disposal techniques to be followed. To be completed in conjunction with Asbestos remediation.

42.3.4 All areas around and below the hatches shall be suitably protected from damage from cutting and welding prior to this work commencing.

42.3.5 The ladders will be disconnected from their securing lugs and removed. The new hatches shall be fitted with new lugs and the ladders re-secured with new contractor supplied fasteners upon completion of the work, with the exception of the CO2 ladder.

42.3.6 The existing hatches are to be removed from the deck. The deck openings are to be dressed to allow proper fitting and welding of the new hatch.

42.3.7 The new hatches are to be placed in the deck with an approx. ½" protrusion. Each hatch is to be proven square to the deck and a coaming height of 24" shall be verified prior to the hatch being welded. The hatch shall have a complete fillet weld around the hatch on both sides of the deck.

42.3.8 Upon completion of all welding the hatches shall be hose tested to the satisfaction of the attending TC/MS inspector.

42.3.9 All welds and disturbed steel shall be painted with two coats of contractor supplied primer.

42.3.10 The CO2 compartment hatch will not be replaced. After removal of the hatch the contractor will fit a piece of 8.5 MM grade A plate to the existing opening. The plate shall be installed with a full penetration weld on the deck side and a back weld on the CO2 Room side.

42.3.11 Contractor is to quote on a certified technical service completing 2 NDT x-rays on the deck plate insert welds, positions to be indicated by the attending TC/MS inspector.

42.3.12 Upon completion of all welding the insert plate shall be hose tested to the satisfaction of the attending TC/MS inspector.

42.3.13 All welds and disturbed steel shall be painted with two coats of contractor supplied primer.

42.3.14 Upon completion of all welding and testing the hatches and plate insert will be reinsulated as per original.

42.3.15 Contractor to ensure that all areas affected by this work have been thoroughly cleaned and all debris removed upon completion of the spec item.

42.4 Proof of Performance

42.4.1 Inspections

42.4.1.1 All work to be to the satisfaction of the Chief Engineer and attending TC/MS inspector.

42.4.2 Testing/Trials

42.4.2.1 N/A.

42.4.3 Certification

42.4.3.1 Provide details for certification of equipment items – i.e. TCMS sign offs, Classification certifications etc.

42.5 Deliverables

42.5.1 Documentation (Reports/Drawings/Manuals)

42.5.1.1 N/A

42.5.2 Spares

42.5.2.1 N/A.

42.5.3 Training

42.5.3.1 N/A

43.0 SHOWER STALL RENEWALS

43.1 Identification (CI # 34)

43.1.1 The intent of this specification is to refurbish the shower stalls and washroom decks in the listed washrooms. All materials to be contractor supply unless otherwise stated.

43.1.2 The following specification is to be completed in conjunction with the following specification items.

- Spec item 16, VLE CI # 39 Asbestos Remediation.
- Spec. item 18, VLE CI #33 Grey Water Deck Drains.

43.1.3 The contractor is to note that scupper replacement is covered under specification # 18, however is restated here for clarity of work scope.

43.2 References

43.2.1 Equipment Data

43.2.1.1 The following showers/decks are to be refurbished.

Cabin/Space	Occupant	Locations	Deck approx. sq ft
339	First Officer	Officers Deck	40
274	Senior Engineer	Upper Deck	40
291	Electronics Off	Upper Deck	40
287	Log Officer	Upper Deck	32
283	Cadet	Upper Deck	32
264	Junior Electrician	Upper Deck	32
266	Senior Electrician	Upper Deck	32
193/192	E/R Tech's	Main Deck	32
130/131	Chief/2nd Cook	Main Deck	32
159/160	Deck Hands	Main Deck	32

43.2.2 Drawings

Drawing Number	Description	Electronic Number
15-0252-01	Deck Covering Plan	
15-0401-01	Joiner and Insulation Details	
22-0708-01	Scuppers and interior drains	

43.2.3 Regulations

43.2.3.1 All work performed and any modifications made, must be compliant with the latest Canada Shipping Act Regulations and in particular to the Marine Machinery Regulations. All work shall meet Transport Canada approved class regulations.

43.2.4 Standards

43.2.4.1 N/A.

43.2.5 Quality Assurance Standards

43.5.1 As per the contractors QA Program.

43.3 Technical

43.3.1 All materials are to be contractor supply unless otherwise stated in this specification.

43.3.2 Cabins are to be protected against dust, debris and damage prior to any work on the washroom being carried out.

43.3.3 The contractor will replace the deck covering with a Dex-o-tex Terrazzo M system seamless floor system or equivalent. The 70 MM floating floor will be replaced with a Dex-o-Tex decklite system or equivalent.

43.3.4 The stainless steel trim in the washroom will be removed and set aside and protected for reinstallation upon completion of all work.

43.3.5 The toilet shall be disconnected and removed from the washroom deck to allow for the removal of the deck covering. The toilet shall be protected from damage and is to be reinstalled upon completion of repairs.

43.3.6 The seven washrooms above the main deck have a 10 mm underlayment with an approximate 4 mm seamless deck covering. The three washrooms located on the main deck have a 6 mm seamless deck covering over a 70 mm A60 floating floor. The showers in these cabins are fitted with a 12 GA Sheet metal tray.

43.3.7 Contractor shall remove the deck covering in the shower and washroom of the upper 7 cabins to the steel deck. A 12 GA sheet metal coaming piece makes the shower tray for these cabins. Care is to be taken not to damage the coaming when removing the deck covering. Deck is to be properly prepared as per manufacturer's recommendations for the installation of the new seamless deck covering.

43.3.8 The three cabins on the main deck will have the deck covering and floating floor removed to the steel deck. In the showers the deck covering is to be removed from the sheet metal shower tray and the tray removed from the shower. The tray is held in place with anchor screws. Once the tray is removed the floating floor is to be removed to the steel deck. Contractor will supply 3 new shower trays to be reinstalled in the new deck covering.

43.3.9 There are two deck scuppers fitted in each washroom. Contractor is to remove the scupper bells from the deck and disconnect from the drain piping. The upper

cabins are connected into PVC piping and the Main deck drains are connected to black iron pipe. All connections are 1 ½" as per specification item #18.

43.3.10 Contractor to supply and install 20 new scupper bells. Scupper bells are to be complete with integrated trap and brass grate cover. Bells are to be fillet welded on both sides of the deck. Scupper bells are to be located as per the original scuppers to allow for the proper thickness of deck covering. The deck scupper bells are to be attached to the existing grey water piping as per specification item #18.

43.3.11 The deck is to be power tool cleaned, as required, to obtain a suitable surface for the new deck covering. After the steel has been prepared, and the new scuppers installed, the entire deck is to be primed.

43.3.12 The Owner's representative will select the colour for the deck covering. The contractor is to provide a sample of the available colours of the deck covering to the owner's representative prior to application.

43.3.13 The new 70 mm floating floor, underlayment and deck covering shall be installed in the main deck washrooms, as per manufacturer's recommendations. The three new shower trays are to be installed and secured to the floating floor prior to the deck covering being installed. Deck covering to be coved 100mm up from the deck in the washroom and 200mm from the deck in the showers.

43.3.14 The remaining 7 washrooms will have the 10 mm underlayment and deck covering installed in the washrooms as per manufacturer's recommendations. Deck covering to be coved 100mm up from the deck in the washroom and 200mm from the deck in the shower.

43.3.15 Upon completion of deck covering renewals, the toilets are to be reinstalled.

43.3.16 The 10 showers stalls are to be fitted with new shower liners over the existing bulkheads.

43.3.17 Contractor will remove the shower fixtures as required, allowing for the proper fitting of the shower liners. Shower bulkheads are to be thoroughly cleaned prior to the installation of the shower liners.

43.3.18 New shower liners are to be installed and secured in the shower. Liners are to be completely sealed and made watertight.

43.3.19 Shower fixtures are to be reinstalled upon completion of liner installations.

43.3.20 The stainless steel trim is to be reinstalled over the top of the flooring and re-riveted in place. All trim shall be sealed with high quality clear silicon.

43.4 Proof of Performance

43.4.1 Inspections

43.4.1.1 All work to be to the satisfaction of the Chief Engineer.

43.4.2 Testing/Trials

43.4.2.1 All shower fittings to be tested and proven leak free upon completion of all work.

43.4.2.2 Shower and deck scuppers are to be proven leak free upon completion of all work.

43.4.2.3 All toilets to be proven operational.

43.4.3 Certification

43.4.3.1 N/A.

43.5 Deliverables

43.5.1 Documentation (Reports/Drawings/Manuals)

43.5.1.1 The contractor is to provide a listing of all material purchased the for the shower refurbishment, including supplier data, costing, part numbers, model numbers and lead times.

43.5.1.2 The contractor is to provide MSDS sheet for all consumables utilized for the completion of the specification item.

43.5.2 Spares

43.5.2.1 N/A.

43.5.3 Training

43.5.3.1 N/A.

44.0 P & S SEARCHLIGHT RENEWAL

44.1 Identification (CI # 160, 161, 162)

44.1.1 The intent of this specification is to remove the Port and Stbd IBAK Searchlights and replace with New Colorlight searchlights.

44.1.2 This specification item will be completed in conjunction with the following specifications.

- VLE CI# 162 Centre Searchlight Replacement
- VLE CI #161 Aft Searchlight Replacement
- VLE CI# 39 Asbestos Remediation

44.2 References

44.2.1 Equipment Data

44.2.1.1 Existing Searchlight IBAK Xenon Type X659 F

44.2.1.2 Colorlight Installation manual CL25_CL35_Ver. F1.6_ENG

44.2.1.3 Colorlight Users_manual_CL20_25_35_Eng_Ver. F1.1_ENG

44.2.1.4 Colorlight Elbox_CL20-25-35 electronic box

44.2.1.5 Colorlight OP3G operator panel

44.2.2 Drawings

Drawing Number	Description	Electronic Number
33-0882-01	Wireway Deck Plan Bridge Deck and Void space	
33-0882-02	Wireway Deck Plan Officers Deck	
34-0864-01	Searchlight System Deck plan and Connection Diagram	
16-0020-02	Searchlight Wheelhouse top Seat.	
34-0864-01	Searchlight System Deck Plan and Connection Diagram	

44.2.3 Regulations

44.2.3 All work performed and any modifications made, must be compliant with the latest Canada Shipping Act Regulations and in particular to the Marine Machinery

Regulations. All work shall meet Transport Canada approved class regulations standards.

44.2.3.1 Coast Guard Fleet Safety and Security Manual

44.2.3.2 Coast Guard ISM Hotwork Procedures

44.2.3.3 Coast Guard ISM Fall protection procedures

44.2.3.4 CWB CSA 47.1 Latest revision Division I, II or III

44.2.3.5 TP 127E Shipboard Electrical Standards

44.2.4 Quality Assurance Standards

44.2.4.1 As per the Contractors QA Program.

44.3 Technical

44.3.1 Six main equipment items shall be installed for this spec item. Two each of: searchlight, power supply unit and the main control panel.

44.3.1 The contractor shall supply all materials, equipment, and parts required to perform the specified work unless otherwise stated, including but not limited to scaffolding and crane usage.

44.3.3 All new and disturbed steel shall be coated with two coats of contractor supplied primer.

44.3.4 Existing searchlights power shall be locked out at panel EP 501 in the Electronics Equipment room. Lockouts to be completed in conjunction with the vessel's Electrical Officer.

44.3.5 Access to cables is in the Electronics Equipment room, the Officers Deck deckhead, the bridge void space, and the Bridge Deck deckhead.

44.3.6 The loud hailer speaker located on each searchlight will be disconnected from the searchlight and set aside. The wiring shall be disconnected and pulled through to the bridge deckhead. Speakers will be protected for reinstallation.

44.3.7 The Port and Stbd searchlights shall be disconnected electrically and removed from their mounts. The electrical wiring (five cables per light) shall be pulled through the kick pipes to the bridge. All existing cabling to be removed in its entirety to the associated control panel in the wheelhouse and starter in the electronics equipment room. All transits interior to the vessel to be resealed in an equivalent to existing method to maintain the watertight and fire integrity. Existing cable routes may be re-used for new cabling. The kick pipes at the wheelhouse top are to be cropped from the

deck and an insert plate is to be welded in the deck. All inserts to have full penetration welds. Cropped sections are approximately 20“by 3” of 10 mm plate.

44.3.8 The existing mounts are to be removed from the deck. The areas under the existing mounts are to be power tool cleaned and primed with weldable primer. New mounts are to be installed in the same general position as the original mount, actual location to be determined at time of installation. The new mounts shall have a section of 8 inch schedule 80 steel pipe 24 inches high welded to the deck. A 340mm square plate 10mm thick shall be centered on the pipe, squared fore and aft and welded. The square plate shall be used to fit isolation mounts as specified in the manufacturer’s installation documentation, instruction **CLI-30001,** page 12. Holes shall be drilled in the plate as specified in the documentation.

44.3.9 All new mounts shall have four angle brackets welded to the pipes and the deck equally spaced around the pipe. Brackets shall be six inches by six inches by 10mm plate. Brackets to be fitted with 1 inch radius drain holes. All welding for the new mounts shall be continuous fillet welds. New steel shall be Lloyds Grade A.

44.3.10 The existing handrail, on both sides will be removed from the first angled stanchion to the antenna support. A new handrail will be installed continuing straight aft from the first stanchion to a point parallel with the antenna support. The rail will continue outboard to the antenna support.

44.3.11 The new Searchlights shall be lifted onto their bases and secured using the supplied anti-vibrations dampers. Mounting to be as per manufacturer’s instructions **CLI-30001**.

41.3.12 Two kick pipes shall be fitted at the aft area of each searchlight. The kick pipes shall be ¾ inch with threaded connection on top and fitted with watertight glands.

44.3.13 The old power supplies for these searchlights are located in the Electronic equipment room. The existing power supply is to be disconnected from its wiring and removed from the space. The wiring for the searchlights and the controllers are to be removed in their entirety. Contractor to bid on removing 10 wire runs (5 wires/ per searchlight) approx. length of 25 meters each. The two power feed cables from EP 501, approx. 5 metres long, shall be removed. Two new power cables shall be run from the existing breakers in EP 501 panel to the under bridge crawl space. Bid on running 2 lengths of cable approx. 20 meters each. The existing breakers shall be replaced with new contractor supplied single phase breakers of equivalent ratings. Existing breakers are a Federal Pioneer CHED-6 three pole breaker. Contractor will supply and install blanks over holes left over from removed 3 pole breakers.

44.3.14 Two new power supplies (E-Box) shall be installed on the aft bulkhead of the crawl space under the bridge. The power supplies are fitted with mounting tabs for bolting the units to structure. Two sections of 2” X 3/8” flat bar 48” long shall be installed on the aft bulkhead on the bulb bar frames. Both Eboxes shall be installed on the flat bars. Final position of the power supplies to be determined by Chief Engineer.

44.3.15 The new power supplies will be supplied with a new contractor supplied 600/220 Volt, single phase enclosed transformer of minimum 2KVA size. Transformer enclosure will

be mounted alongside the new power supply. Location to be determined by Chief Engineer. Contractor to manufacture stands to fit the new transformers to maintain a minimum 3 inch clearance from the deck. Stands to be secured to the deck and the transformers secured to the new stands.

44.3.16 Two new cables shall be installed from each searchlight to the power supply units (Ebox) located in the bridge crawl space. These cables will be factory supply and consist of one 9.1mm cross section and one 10.9mm cross section. The light will come prewired between the searchlight and the Ebox. For the installation of the cables, ONLY the connection from the Ebox is to be removed. The connection to the searchlight is factory sealed to prevent water ingress. Cables shall be run through the new kick pipes and along the wireways in the bridge deckhead, following wireways, running between the fwd windows, to the void space and along the wireways to the eboxes. Cables to be connected to new power supplies will be CCG supply. Cable length is specific from the factory and must not be cut or altered. Cables to be run a maximum of 30 metres which will be supplied as part of the light package.

44.3.17 The existing controllers are located in the port and stbd bridge wing consoles. The old controllers shall be disconnected from the wiring and removed.

44.3.18 The contractor will make a 420 mm by 520 mm stainless steel cover plate for the existing opening in the wing consoles. These cover plates will each have a 125mm by 125 mm cut out for the new controller and will be attached to the console with countersunk screws. The new controller will be attached to the new plate at the lower end of the plate.

44.3.19 The existing wires from the old controllers to the old power supply will be pulled back and removed from the existing wire run. Contractor to bid on 6 cables per controller approx. 15 meters each.

44.3.20 Two new cables shall be installed from each of the new controllers (wheelhouse console) to the Eboxes. Contractor to run the cables through the bridge deck to the void space where they will use the existing wireways to run the cables to the eboxes. Allow 7 meters of cable for each of the two runs of cables. One cable will be a minimum 14/3 marine cable to be connected to the 24Vdc of the Ebox (terminals 15 & 16). The other cable will be a Cat5e cable that complies with standard TIA/EIA-568-B. The Cat5E cable will be terminated with standard T568A connectors as outlined on page 26 of the installation manual. The Cat5E cable will plug into the Ebox next to the main power input terminals. This Cat5E input is not shown on the installation drawing.

44.3.21 Contractor shall install two ½ inch kickpipes, complete with watertight glands, on the bridge top, one port and one stbd, at a position determined by the Chief Engineer. The contractor will manufacture a suitable bracket for the loud hailers and they shall be mounted to the rail above the newly installed kick pipes. The loudhailer wires shall be run up through the new kick pipes and connected to the loudhailers.

44.3.22 The type, style and size of all cabling shall be as specified in the manufacturer's documentation. All cables shall be connected to the appropriate equipment and power sources as specified in the manufacturer's documentation.

44.3.23 All cables shall be tagged with circuit identification at all points of connection and on both sides of bulkheads, decks and barriers. The tags will be metal, compatible with the cable sheath and shall have a circuit designation embossed thereon. Both ends of the tag shall be secured to the cable with metal tape or metal ty-raps. All cables shall be properly secured along their length with ty-raps.

44.3.24 All cable transits and glands shall be opened as required and repacked with approved sealant or sealing arrangement upon completion of all work.

44.4 Proof of Performance

44.4.1 Inspections

44.4.1.1 All work to be completed to the satisfaction of the Chief Engineer

41.4.2 Testing/Trials

44.4.2.1 All new cabling will be tested/inspected as per manufacturer's recommendations to ensure there has been no damage during installation.

44.4.2.2 All aspects of the Searchlight's operation shall be proven operational. Searchlight to be run for a minimum of one hour.

44.4.3 Certification

44.4.3.1 N/A.

44.5 Deliverables

44.5.1 **Documentation (Reports/Drawings/Manuals)**

44.5.1.1 Two (2) hard copies and 1 electronic pdf copy of all cable tests to be given to the Chief engineer prior to mounting of lights or installation of transformers.

44.5.2 **Spares**

44.5.2.1 Spares will be shipped with the owner supplied lights, these shall remain in the custody of the Contractor, protected with the vessels stores and delivered to the Chief Engineer or his delegate prior to sea trials.

44.5.3 **Training**

44.5.3.1 N/A.

45.0 AFT SEARCHLIGHT REPLACEMENT

45.1 Identification (CI # 161)

45.1.1 The intent of this specification is to remove the Aft searchlight and replace it with a new Norse Searchlight.

45.1.2 This specification item will be completed in conjunction with the following specifications.

- VLE CI# 162 Centre Searchlight Replacement
- VLE CI #160 Port And Stbd Searchlight Replacement
- VLE CI# 39 Asbestos Remediation.

45.2 References

45.2.1 Equipment Data

45.2.1.1 Existing Searchlight IBAK Xenon Type X659 F

45.2.1.2 Norselight XS3000 R60 230V NR 3000 watt searchlight with special Nickel Rodium Reflector. 14KM Range. P/N 600209538, **CCG supply.**

45.2.1.3 Norselight Zenon Power supply for 1000-3000Watt EX-Series, P/N **1009165**, **CCG supply.**

45.2.1.4 Norselight R60 new generation searchlight control panel, P/N 6009001, **CCG supply**

45.2.1.5 Norselight R60-V7_Xenon_Usermanual.

45.2.2 Drawings

Drawing Number	Description	Electronic Number
33-0882-01	Wireway Deck Plan Bridge Deck and Void space	
33-0882-02	Wireway Deck Plan Officers Deck	
34-0864-01	Searchlight System Deck Plan and Connection Diagram	
E-R60-000	R60 XS500-3000 system layout	Included in manual Pg 14

45.2.3 Regulations

45.2.3.1 All work performed and any modifications made, must be compliant with the latest Canada Shipping Act Regulations and in particular to the Marine Machinery Regulations. All work shall meet Transport Canada approved class regulations.

45.2.4 Standards

45.2.4.1 Coast Guard Fleet Safety and Security Manual.

45.2.4.2 Coast Guard ISM Hotwork Procedures.

45.2.4.3 Coast Guard ISM Fall Protection procedures.

45.2.4.4 CWB CSA 47.1 Latest revision I, II, or III.

45.2.4.5 TP 127E Shipboard Electrical Standards.

45.3 Technical

45.3.1 Three main equipment items shall be installed for this spec item. The searchlight, power supply unit and the main control panel.

45.3.2 The contractor shall supply all materials, equipment, and parts required to perform the specified work unless otherwise stated, including but not limited to scaffolding and crane usage.

45.3.3 Existing searchlights power shall be locked out at panel EP 501 in the Electronics Equipment room. Lockouts to be completed in conjunction with the vessel's Electrical Officer.

45.3.4 Access to cables is in the Electronics Equipment room, the Officers Deck deckhead, the bridge void space, and the Bridge Deck deckhead.

45.3.5 The Searchlight on the aft mast is to be disconnected electrically and disconnected from the base. Searchlight is to be removed from the mast.

45.3.6 The existing mount is to be removed from the mast. A new mount is to be installed on the mast. The mount shall have a section of 8 inch Sch 80 pipe 24 inches high. The mount shall be installed in the same position as the present mount. A 450mm x 310 mm 10 mm plate shall be centred on the pipe and welded. Four angle brackets, suitably sized, shall be welded between the pipe and mounting plate, equally spaced around the pipe.

45.3.7 The mount shall have four angle brackets welded to the pipe and the deck equally spaced around the pipe. Brackets shall be six inches by six inches by 10mm plate. Brackets to be fitted with 1 inch radius rat holes. All welding for the new mounts shall be continuous fillet welds. New steel shall be Lloyds Grade A.

45.3.8 The new searchlight shall be lifted to the mast and secured on the new mount with stainless steel bolts, nuts and washers. Mounting to be as per manufacturer's instructions.

45.3.9 The old power supply for this searchlight is located in the Electronic equipment room. The existing power supply is to be disconnected from its wiring and removed from the space. The new power supply will be installed and secured in the same area as the old power supply. Contractor to adjust the securing arrangements as required to fit the new power supply. The existing power cable will be reused and reconnected to the power supply. The existing power cable for the search light shall also be reused, designated SL-51. The existing wiring to the search light shall also be reused, designated SL-50. The existing control cable SL-44 from the control panel station in the wheelhouse and the starter will be re-used. All other wiring shall be removed from the wireways to the searchlight. All re-used cabling will be tested electrically and inspected for damage before re-use to the satisfaction of the Chief Engineer. Cable SL-51 will be retagged as AFT- W1. Cable SL-50 will be retagged as AFT-W12. Cable SL-44 will be retagged as AFT- W13. New cables to be run are designated on drawing E-R60-000 and are as follows:

- W3, Lan cable from wheelhouse control to searchlight, Cat5E approximately 80 meter run
- W6, Supply from panel EP501 to transformer 575/230, existing cable
- W6-1, Supply from 600/230 transformer to Xenon power supply, new cable
- W11, control wire from 24Vdc power supply mounted in control station
- W12 (SL-50), connected to 230V 15 amp fused circuit in junction box adjacent to transformer power , Existing cable
- W13, signal cable from wheelhouse PLC module to Xenon power supply

45.3.10 The existing 3 phase power cable from panel EP-501 will be re-used and connected to a Owner supplied 600/230 volt minimum 6KV single phase enclosed transformer mounted adjacent to the new searchlight power supply. The contractor will mount a junction box adjacent to the transformer which will have 2 fused circuits connected to the 220volt output of the transformer. One fused circuit (5 amp slow blow) will be connected to cable W13 and will be used to feed the 220/24vdc power supply on the bridge. The other fused circuit (15 amp slow blow) will be used to feed circuit W12

45.3.11 The existing breaker is a Federal Pioneer CHED-6 three pole breaker. Contractor will supply a new 2 pole breaker suited to fit the new transformer and install blanks over holes left over from removed 3 pole breaker.

45.3.12 A new 230Volt to 24vdc power supply (contractor supply, CARLO GAVAZZI SPD24601B or equivalent) will be mounted in the old controller station on the bridge and fed from the cable designated Aft-W13. The other 2 ends of the cable will be connected to the 230 power input of the Xenon power supply. The output of the new 24vdc power supply will feed input W11.

45.3.13 The existing controller is located in the stbd aft bridge wing adjacent to the exit door. The old controller and door shall be disconnected from the wiring and removed. The

frame around the box opening shall be removed. The existing box shall be retained. The existing control station is pictured below:

45.3.14 The contractor will make a 420 mm by 520 mm stainless steel cover plate for the existing opening in the bulkhead. This cover plate will have an opening cut out for the new controller and will hinged on the outboard side and attached to the bulkhead with countersunk screws. Controller will be attached in the new plate.

45.3.15 The existing wires from the old controller to the searchlight will be pulled back and removed from the existing wire run.

45.3.16 The redundant kickpipes shall be removed and the openings fitted with inserts and full penetration welded.

45.3.17 The type, style and size of all cabling shall be as specified in the manufacturer's documentation. All cables shall be connected to the appropriate equipment and power sources as specified in the manufacturer's documentation.

45.3.18 All cables shall be tagged with circuit identification at all points of connection and on both sides of bulkheads, decks and barriers. The tags will be metal, compatible with the cable sheath and shall have a circuit designation embossed thereon. Both ends of the tag shall be secured to the cable with metal tape or metal ty-raps. All cable tags will be preceded with AFT-W** (** denotes cable number).

45.3.19 All cable transits and glands shall be opened as required and repacked upon completion of all work.

45.4 Proof of Performance

45.4.1 Inspections

45.4.1.1 All work is to be to the satisfaction of the Chief Engineer.

45.4.2 Testing and Trials

45.4.3.1 All new cabling will be tested /inspected as per manufacturer's recommendations to ensure there has been no damage during installation.

45.4.3.2 All aspects of the searchlight's operation shall be proven operational. Searchlight test is to be at least one hour.

45.4.4 Certification

45.4.4.1 N/A.

45.5 Deliverables

45.5.1 Documentation (Reports/Drawings/Manuals)

45.5.1.1 Two (2) hard copies and 1 electronic pdf copy of all cable tests to be given to the Chief engineer prior to mounting of lights or installation of transformers.

45.5.2. Spares

45.5.2.1 Spares will be shipped with the owner supplied lights, these shall remain in the custody of the Contractor, protected with the vessels stores and delivered to the Chief Engineer or his delegate prior to sea trials.

45.5.3 Training

45.5.3.1 N/A.

46.0 CENTRE SEARCHLIGHT RENEWAL

46.1 Identification

46.1.1 The intent of this specification is to remove the Centre forward searchlight and replace it with a new owner supplied Norse Searchlight.

46.1.2 This specification item will be completed in conjunction with the following specifications.

- VLE CI# 161 Aft Searchlight Replacement
- VLE CI #160 Port And Stbd Searchlight Replacement

46.2 References

46.2.1 Equipment Data

46.2.1.1 Existing Searchlight Carlisle and Finch 2500

46.2.1.2 Norselight XS3000 R60 230V NR 3000 watt searchlight with special Nickel Rodium Reflector. 14KM Range. P/N 600209538, **CCG supply.**

46.2.1.3 Norselight Zenon Power supply for 1000-3000Watt EX-Series, P/N **1009165**, **CCG supply.**

46.2.1.4 Norselight R60 new generation searchlight control panel, P/N 6009001, **CCG supply.**

46.2.1.5 Norse Light R60-V7_Xenon_Usermanual

46.2.2 Drawings

Drawing Number	Description	Electronic Number
33-0882-01	Wireway Deck Plan Bridge Deck and Void space	
33-0882-02	Wireway Deck Plan Officers Deck	
E-R60-000	R60 XS500-3000 system layout	Included in manual Pg 14

46.2.3 Regulations

46.2.3.1 All work performed and any modifications made, must be compliant with the latest Canada Shipping Act Regulations and in particular to the Marine Machinery Regulations. All work shall meet Transport Canada approved class regulations Standards.

46.2.3.2 Coast Guard Fleet Safety and Security Manual.

46.2.3.3 Coast Guard ISM Hotwork Procedures.

46.2.3.4 Coast Guard ISM Fall protection procedures.

46.2.3.5 CWB CSA 47.1 Latest revision Division I, II or III.

46.2.3.6 TP 127E Shipboard Electrical Standards.

46.2.4 Quality Assurance Standards

46.2.4.1 As per the Contractors QA Program.

46.3 Technical

46.3.1 Three main equipment items shall be installed for this spec item. The searchlight, power supply unit and the main control panel.

46.3.2 The contractor shall supply all materials, equipment, and parts required to perform the specified work unless otherwise stated, including but not limited to scaffolding and crane usage.

46.3.3 Existing searchlights power shall be locked out at panel EP 501 in the Electronics Equipment room. Lockouts to be completed in conjunction with the vessel's Electrical Officer.

46.3.4 Access to cables is in the Electronics Equipment room, the Officers Deck deckhead, the bridge void space, and the Bridge Deck deckhead.

46.3.5 The Searchlight on the mast is to be disconnected electrically and disconnected from the base. Searchlight is to be removed from the mast.

46.3.6 The existing mount is to be removed from the mast. A new mount is to be installed on the mast. The mount shall have a section of 8 inch Sch 80 pipe 6 inches high. The mount shall be installed in the same position as the present mount. A 450mm x 310 mm 10 mm plate shall be centred on the pipe and welded. Four angle brackets, suitably sized, shall be welded between the pipe and mounting plate, equally spaced around the pipe.

46.3.7 The mount shall have four angle brackets welded to the pipes and the deck equally spaced around the pipe. Brackets shall be six inches by six inches by 10mm plate. Brackets to be fitted with 1 inch radius rat holes. All welding for the new mounts shall be continuous fillet welds. New steel shall be Lloyds Grade A.

46.3.8 The new searchlight shall be lifted to the mast and secured on the new mount with stainless steel bolts, nuts and washers. Mounting to be as per manufacturer's instructions.

46.3.9 The old power supply for this searchlight is located in the void space beneath the bridge. Contractor is to remove the soft patch, located on the port side outside

under the bridge deck. The existing power supply and switch box are to be disconnected from its wiring and removed from the space. All existing wiring shall be removed from the wireways to the searchlight and controllers. Upon completion of installation soft patch is to be reinstalled with new contractor supplied rubber gasket.

46.3.10 The new power supply will be installed and secured in electronics equipment room in way of the removed Ibak searchlight power supplies. Owner supplied 600/230 volt, minimum 6KV, single phase enclosed transformer will be mounted adjacent to the new searchlight power supply. The existing 3 phase power cable from panel EP-501 for the stbd searchlight will be re-used and connected to the transformer. The contractor will mount a junction box adjacent to the transformer which will have 2 fused circuits connected to the 220volt output of the transformer. One fused circuit (5 amp slow blow) will be connected to cable W13 and will be used to feed the 220/24vdc power supply on the bridge. The other fused circuit (15 amp slow blow) will be used to feed circuit W12.

46.3.11 The existing breaker is a Federal Pioneer CHED-6 three pole breaker. Contractor will supply a new 2 pole breaker suited to fit the new transformer and install blanks over holes left over from removed 3 pole breaker.

46.3.12 The existing light controller is located in the centre console above the quartermaster's chair. The old controller shall be disconnected from its wiring and removed.

46.3.13 A new 8 conductor cable shall be run from the Xenon power supply to the forward overhead panel on the bridge. The cable shall be run from the power supply into the void space to the main wireway aft. The cable will pass through the deck at the main transit at frame 129. The wire will pass to the bridge and be run in the deckhead wireways to the control panel. Power cable will be connected to the new controller. Allow 25 metres for this run of cable.

46.3.14 The contractor will make a stainless steel cover plate for the existing opening in the console. This cover plate will have an opening cut out to fit the new controller. The new plate will be attached to the console with countersunk screws.

46.3.15 The existing wire from the old controller to the searchlight will be pulled back and removed from the existing wire run. The new controller to be installed in upper console.

46.3.16 The type, style and size of all cabling shall be as specified in the manufacturer's documentation. All cables shall be connected to the appropriate equipment and power sources as specified in the manufacturer's documentation. New cables to be run are designated on drawing E-R60-000 and are as follows:

- W1 , Xenon power supply outlet to light on mast **, 40 meters approximate**
- W3, Lan cable from wheelhouse control to searchlight, Cat5E approximately 40 meter run
- W6, Supply from panel EP501 to transformer 575/230, existing cable
- W6-1, Supply from 600/230 transformer to Xenon power supply, new cable

- W11, control wire from 24Vdc power supply mounted in control station above center console.
- W12 connected to 230V 15 amp fused circuit in junction box adjacent to transformer and fed to center searchlight
- W13, signal cable from wheelhouse PLC module to Xenon power supply, **minimum 8 conductor. Detail on drawing states 6x**

46.3.17 A new 230Volt to 24vdc power supply **(contractor supply, CARLO GAVAZZI SPD24601B or equivalent)** will be mounted in the old controller station above the console on the bridge and fed from the cable designated FWD-W13. The other 2 ends of the cable will be connected to the 230 power input of the Xenon power supply. The output of the new 24vdc power supply will feed input W11.

Center Searchlight control location

46.3.18 All cables shall be tagged with circuit identification at all points of connection and on both sides of bulkheads, decks and barriers. The tags will be metal, compatible with the cable sheath and shall have a circuit designation embossed thereon. Both ends of the tag shall be secured to the cable with metal tape or metal ty-raps. All cable tags will be preceded with FWD-W** (** denotes cable number).

46.3.19 All cable transits and glands shall be opened as required and repacked upon completion of all work.

46.3.20 The redundant kickpipes shall be removed and the openings fitted with inserts and full penetration welded.

46.4 Proof of Performance

46.4.1 Inspections

46.4.1.1 All work is to be completed to the satisfaction of the Chief Engineer.

46.4.1.2 Welds are to be examined by Chief Engineer prior to coating.

46.4.2 Testing/Trials

46.4.2.1 All new cabling will be tested/inspected as per manufacturer's recommendations to ensure there has been no damage during installation.

46.4.2.2 Contractor is to provide services of Glamox FSR to correctly configure and commission searchlight. To be done in conjunction with aft searchlight.

46.4.2.3 All aspects of the Searchlight's operation shall be proven operational. Searchlight shall be operated for a minimum of one hour, during testing.

46.4.2.4 All steel inserts are to be hose tested to prove watertight integrity.

46.4.3 Certification

46.4.3.1 N/A.

46.5 Deliverables

46.5.1 Documentation (Reports/Drawings/Manuals)

46.5.1.1 All Contractors printed instructions, test results and test procedures are to be supplied to the Chief Engineer upon completion of the installation and testing.

46.5.2 Spares

46.5.2.1 Spares will be shipped with the owner supplied lights, these shall remain in the custody of the Contractor, protected with the vessels stores and delivered to the Chief Engineer or his delegate prior to sea trials.

46.5.3 Training

46.5.3.1 Contractor is to provide services of Glamox FSR for 1/2 day for training on the correct operation and maintenance of light. To be done in conjunction with aft searchlight commissioning.

47.0 GALLEY DECK RENEWALS

47.1 Identification (CI #34)

47.1.1 The intent of this specification is to remove the deck covering in the galley and replace with a seamless covering.

47.1.2 The following specification is to be completed in conjunction with the following spec items:

- VLE CI #18 Grey Water Deck Drains and Anti-Syphonic Valves
- VLE CI #120 Galley Equipment Renewal
- VLE CI #121 Galley Deckhead Renewal.

47.2 References

47.2.1 Equipment Data

47.2.1.1 N/A.

47.2.2 Drawings

Drawing Number	Description	Electronic Number
15-0252-01	Deck Covering Plan	
15-0401-01	Joiner and Insulation Details	
15-0316-07	Galley Seating and Details	

47.2.3 Regulations

47.2.3.1 Materials to have Classification society approval for deck coverings onboard ships.

47.2.4 Standards

47.2.4.1 N/A.

47.2.4 Quality Assurance Standards

47.2.4.1 As per the Contractors Quality Assurance Program.

47.3 Technical

47.3.1 All materials to be contractor supply unless otherwise stated in this specification.

47.3.2 The deck in the galley is to be removed and replaced with seamless troweled deck covering system such as Dex-o-Tex Terrazzo M or equivalent. All items to be contractor supply unless otherwise stated. The galley deck area (including coves)

is approx. 450 sq ft. Deck covering to include a 10 mm underlayment with a 4 mm layer (minimum) of seamless deck covering.

47.3.3 The small chest freezer, the standup freezer and the cabinet on the port side of the galley, along with any other items necessary, are to be removed from the galley to allow the deck covering replacement. The items are to be safely stored and reinstalled in the galley in their original positions after the deck renewal is completed.

47.3.4 In conjunction with the specification items previously listed, the contractor is to remove the deck tiles and underlayment to the steel deck.

47.3.5 There are four scuppers in the galley deck. The replacement of which is covered by Specification # 18. The bells will be fitted in the deck at the appropriated height for the deck covering and allow for proper drainage. The new bells will be fully welded on both sides of the deck. The new scupper bells will be reconnected to the existing grey water lines.

47.3.6 The drain lines are located in the motor room and the contractor is to ensure that the areas below scuppers are suitably protected against cutting, grinding and welding. Two of the drains are located above the Cyclo Convertors and care must be taken to prevent any damage to these units.

47.3.7 Contractor is responsible for all ladders and scaffolding required to install the new scupper bells. Note: scaffolding and ladders cannot be placed on the top of the propulsion motors.

47.3.8 The deck is to be power tool cleaned as required to obtain a suitable surface for the new deck covering. After the steel has been prepared, and the new scuppers installed, the entire deck is to be primed.

47.3.9 The Owner's representative will select the colour for the deck covering. The contractor is to provide a sample of the available colours of the deck covering to the owner's representative prior to application.

47.3.10 Contractor to apply the new deck covering to the original thickness as per manufacturer's instructions. The deck covering shall be coved 100mm at all vertical edges in the galley.

47.4 Proof of Performance

47.4.1 Inspections

47.4.1.1 All work to be to the satisfaction of the Chief Engineer.

47.4.2 Testing/Trials

47.4.2.1 All drains to be proven watertight upon completion of deck covering replacement as per 18.0 GREY WATER DECK DRAINS AND ANTI-SYPHONIC VALVES paragraphs 18.4.2.2 and 18.4.2.2.

47.4.3 Certification

47.4.3.1 N/A.

47.5 Deliverables

47.5.1 Documentation (Reports/Drawings/Manuals)

47.5.1.1 Details of materials utilized are be presented to Chief Engineer detailing any certification, manufacturer, supplier, cost and lead times.

47.5.2 Spares

47.5.2.1 N/A.

47.5.3 Training

47.5.3.1 N/A.

48.0 TEMPORARY ACCESS TO GALLEY

48.1 Identification (CI # 120)

48.1.1 This document provides information covering the temporary removal and replacement of steel structures to allow for access to the galley from the upper deck starboard side.

48.1.2 The following specification is the proposed temporary access to allow for the removal of existing galley equipment and the ingress of new equipment as per specification #49.

48.2 References

48.2.1 Equipment Data

48.2.1 The vessel owners will not supply any materials or labour. All materials and labour will be contractor supplied. It is the owner's intention that the successful contractor will be responsible to complete all aspects of this work

48.2.2 Drawings

The following drawing is attached for use covering this work;

- 2580-01-00 CCGS Henry Larsen Temporary Access to Galley.

48.2.3 Regulations

48.2.3.1 It is the contractor's responsibility to follow all applicable federal, provincial and local regulations. The contractor is to adhere to all DFO-Coast Guard / PWGS work requirements and must complete the work to the satisfaction of the vessel representative.

48.2.4 Standards

48.2.4.1 Only CWB approved welders are to complete the welding. All welds shall be completed as per approved CWB weld procedures. Documentation to show welder qualifications and weld procedures will be supplied to the owner. The contractor's welding inspector will complete a visual inspection of all welds.

48.2.5 Quality Assurance Standards

48.2.5.1 As per the Contractors Quality Assurance Program.

48.3 Technical

48.3.1 The details for welding existing deck/bulkhead/bulwark plating and stiffeners back in place are to be as per the current installation. All plate seams are to be full

penetration. All stiffeners to plate connection are to be double continuous fillet. All welding on exterior structures are to be double continuous.

48.3.2 The contractor shall remove weld splatter and smooth weld seams and sharp edges and remove grease, smoke, and soot marks as per SSPC-SP 1. All welds shall be power tool cleaned to SSPC-SP 3 and primer applied by hand brush.

48.3.3 Coatings and Paint Work

The contractor will be responsible to prepare and coat both the cropped steel sections and the heat affected steel in the repair areas. The heat affected paint is to be hand tooled to a feathers edge and the current coating reapplied. The contractor is to supply all coatings. All coatings are to be in accordance with the ships painting system. The contractor is to complete the coating and all associated machine tooling to feather back the affected areas. All coatings, glues, and solvents must be supplied with acceptable WHIMS data sheets and correctly marked. The contractor is responsible to remove all containers of paint and solvents from the work place daily.

48.3.4 Protection of Area from Environmental Damage

It is also the contractor's responsibility to protect the vessel from damage due to cold temperatures and water while the steel repair is ongoing. The contractor is to ensure that all still water in the work area is isolated or heat protected. The contractor is to effectively tarp and insulate the area so that other damages are not created. If other damages occur due to ineffective environmental protection, the contractor will repair at the contractor's cost.

48.3.5 Protection of Area from Additional Damage and Disruption

The contractor is responsible to protect the vessel's crew mess from physical damage and contamination due to the generated smoke. This will include the provision of suitable extraction fans. Also, the contractor must cover the floors, deck heads, bulkheads and outfit as required to limit additional damages.

48.3.6 Removals and Replacement

The following items will be temporarily removed to allow for access to the ships galley;

- Removal of interference items including but not limited to bulkhead/deckhead panels, insulation wiring, electrical fixtures and piping in way of access cut outs in upper deck and starboard galley bulkhead.
- Section of deck plating and corresponding stiffeners between frames 50 and 54 on the upper deck starboard side from 4'-9" outboard of deckhouse bulkhead to 8'-9" outboard.
- Section of Upper deck starboard side bulwark between frames 52 and 55
- Section of starboard side galley longitudinal bulkhead in way of the forward shutter between frames 45 and 51.

The contractor will be responsible for the removal of all interference items to permit steel removals and replacement.

Upon completion of steel work, all temporarily removed items are to be reinstated in good order to the satisfaction of the Chief Engineer.

The scantling sizes of the original structure can be obtained from the following vessel drawings;

- Burrard Yarrows Corporation, drawing No.H-02: Construction Sections
- Burrard Yarrows Corporation, drawing No.H-03: Profile & Decks - Superstructure Decks
- Versatile Pacific Shipyards Inc., drawing No. 14-0323-03: Unit-323 Longl. Structures
- Drawing No. 13-0077-01: General Arrangement Main Deck
- Drawing No. 13-0076-01: General Arrangement Upper Deck

48.3.7 Hot Working on Existing Ship's Structure

Hot work will be completed by the shipbuilder in a number of areas of existing ships structure. The shipbuilder is to ensure that any combustible materials are removed from these areas and that the areas are suitable for hot work.

48.4 Proof of Performance

48.4.1 Inspection

48.4.1.1 The work is to be completed to the satisfaction of the Chief Engineer. The completed steel work is to be visually inspected after welding is completed. All full penetration welds are to receive 100% UT by approved testing personnel. This testing is to be carried out in the presence of the Chief Engineer. All costs associated with the inspection to be included in the contractor's price for known steel work.

48.4.1.2 The contractor shall issue and post hot work permits and shall maintain a fire watch.

48.4.2 Testing/Trials

48.4.2.1 The contractor is responsible for all air quality testing to ensure hot work and entry is permitted.

48.4.2.2 All full welds are to receive 100% UT by approved testing personnel. This testing is to be carried out in the presence of the vessel owner's representative.

48.4.3 Certification

48.4.3 All steel materials are to certified grade "A" or equivalent.

48.5 Deliverables

48.5.1 Documentation (Reports/Manuals/Drawings)

48.5.1.1 Change to: 48.5.1.1 Three copies of the following documentation are to be supplied to the Chief Engineer prior to the start of work:
• Material Certificates for Plate & Sections
• CWB Certificates for Welders
• CWB Certificates for Weld Supervisor
• CWB Weld Procedures
• CWB Weld Data Sheets
Three copies of the following documentation are to be supplied to the Chief Engineer upon completion of the work:
• NDT Documentation

48.5.2 Spares

48.5.2.1 N/A.

48.5.3 Training

48.5.3.1 N/A.

Upper Deck Starboard Side Looking Forward

Upper Deck Starboard Bulwark and Deck Looking Outboard

Crew Mess Main Deck Starboard Side Looking Outboard

Galley I.W.O. Forward Shutter Main Deck Starboard Side Looking Inboard

49.0 GALLEY EQUIPMENT RENEWAL

49.1 Identification (CI # 120)

49.1.1 The intent of this specification is to remove the existing galley equipment, as specified, and replace with new contractor supplied equipment.

49.1.2 This item shall be completed in conjunction with the following:
Specification #48 VLE CI #41 Galley Deck Refurbishment
Specification # 50 VLE CI #121 Galley Deckhead renewal.

49.2 References

49.2.1 Equipment Data

49.2.1

Fitted Item	Model Numbers
Garland Range with Stove Top	
Garland Range with Griddle Top	
Garland Double Steam Kettle	
Vulcan convection Steamer	
Garland Deep Fryer (Owner Supplied)	36ES11
Blodgett Convection Oven	Mark V
Terminal 6 Station Steam Table	

49.2.2 Drawings

Drawing Number	Description	Electronic Number

49.2.3 Regulations

49.2.3.1 All work performed and any modifications made, must be compliant with the latest Canada Shipping Act Regulations and in particular to the Marine Machinery Regulations. All work shall meet Transport Canada approved class regulations.

49.2.4 Standards

49.2.4.1 Fleet Safety and Security Manual (DFO/5737)

49.2.4.2 Ship's Electrical Standards-TP127

49.2.5 Quality Assurance Standards

49.2.5.1 As per the Contractors QA Program.

49.3 Technical

49.3.1 Contractor shall supply all equipment, enclosures, ventilation, staging, chain falls, cranage, slings, and shackles necessary to perform the work. All lifting equipment shall be appropriate for the expected duties, and be accompanied by current certification indicating, or be permanently marked as to being, of a safe working load for the expected duties.

49.3.2 Contractor will supply the following replacement galley equipment or suitable equivalent with the exception of the Garland deep fryer which is owner supply. All items 208V. All equipment to be fitted with Marine Equipment options where available.

Replacement Item	**Model Numbers**
Range with Stove Top	Garland 36ER39 Heavy Duty Boil Section Top Range
Range with Griddle Top	Garland 36ER38 Heavy Duty Griddle Top Range
Double Steam Kettle	Cleveland TKET-3-T Twin Electric Kettle (complete with H and C Water Faucet with Swing Spout
Convection Steamer	Vulcan C24EA Electric Convection Steamer
Deep Fryer (Owner Supplied)	36ES11
Convection Oven	Blodgett Mark V-100 Xcel
6 Position Steam table 86”	

49.3.3 In conjunction with the ship’s Electrical Officer the Contractor shall lock out all of the galley equipment that is to be removed prior to any work starting in the galley.

49.3.4 All the galley equipment is to be disconnected electrically and the power cables ends are to be properly insulated and the cable protected from damage.

49.3.5 As required, stainless steel plating and shelving etc. to be removed to allow removal of the galley equipment. All removed items are to be safely stored and protected and are to be reused upon installation of the new equipment.

49.3.6 The water lines for the steam oven and steam kettles are to be disconnected from the equipment and capped off and protected for reconnection with the new equipment.

49.3.7 Galley equipment is to be disconnected from the deck and any counter areas. Care is to be taken to not damage any of the in place stainless steel counters.

49.3.8 The galley equipment is to be removed from the galley in accordance with MSI specification Galley Equipment Removal.

49.3.9 Once all equipment is removed from the galley, the areas where the equipment was situated shall be thoroughly cleaned prior to the installation of any new equipment.

49.3.10 A new power cable for the new galley steam kettles shall be run from a spare breaker in panel 281- 208V in the galley to the transit in the centre of the galley. New cable must be run to the Chemical system control box in the motor room. Contractor to supply and install suitable contactor and connectors in the connection box. New cable is to continue from the control panel to the galley. Contractor will install a new transit for this cable in the same area as the present cables. All cabling to follow fitted cable trays. Contractor is responsible to ensure that all transits are properly sealed upon completion of the new cable installation.

49.3.11 The new equipment shall be reinstalled as close as possible to the original positions and properly secured in place. Any changes that are required to be made to the deck securing platform, to fit the new equipment, shall be covered by 1379 action.

49.3.12 All galley equipment mounting arrangements are to be cleaned free of corrosion and debris and given one full coat of marine grade primer and two finish coats of epoxy applied as per the manufacturer's instructions.

49.3.13 All galley equipment shall be reconnected electrically. The water lines to the steam kettle and steam oven to be reconnected. Any additional valves or fittings required for this installation shall be covered by 1379 action.

49.3.14 Stainless steel plating and covers etc. to be reinstalled. Contractor to include in bid price an allowance the manufacture of new stainless steel cover sections and for the adjustment of the present pieces, by a professional sheet metal firm, to fit the new equipment as required.

49.4 Proof of Performance

49.4.1 Inspection

49.4.1.1 All work is to be to the satisfaction of the Chief Engineer, prior to final mounting the Contractor is to notify the Chief Engineer to witness hardening down.

49.4.1.2 Chief Engineer or his delegate are to inspect all electrical and water connections prior to closing up.

49.4.2 Testing/Trials

49.4.2.1 The completed installation is to be functionally tested to the satisfaction of the Chief Engineer.

49.4.3 Certification

49.4.3.1 N/A.

49.5 Deliverables

49.5.1 Documentation (Reports/Drawings/Manuals)

49.5.1.1 Contractor is to supply 2 copies of the manuals for each piece of new galley equipment as listed in paragraph 49.3.2 in both official languages.

49.5.1.2 Contractor is to supply Copies of original invoicing from supplier detailing model numbers, serial numbers and cost for each piece of equipment listed in paragraph 49.3.2.

49.5.1.3 Contractor to include recommended spares list for a five year period for each piece of new equipment installed detailing part numbers, cost and lead times.

49.5.2 Spares

49.5.2.1 N/A.

49.5.3 Training

49.5.3.1 N/A.

50.0 GALLEY DECKHEAD PANEL RENEWAL

50.1 Identification (CI #121)

50.1.1 The intent of this specification is to replace the galley Dampa deck head panels with brushed stainless replacements of equivalent ratings and mountings.

50.1.2 The work specified herein shall be done in conjunction with Asbestos Removals thereby covering effort of tile and equipment removals in the Asbestos Removal costing.

50.2 References

50.2.1 Equipment Data

50.2.1.1 Original Dampa Tiles - Pure white non-perforated ceiling tile D 315, rating B-0, 300mm wide with 25mm mineral wool.

50.2.1.2 Replacements - Dampa Brushed stainless steel type 308, Rating B-0, 300mm wide, with inlay of 25mm mineral wool. To include edge trim 2000mm length, 30 pieces.

50.2.2 Drawings

Drawing Number	Description	Electronic Number
15-0302-01	Ceiling Plan Main Deck FRS. 30 - 61 Sheet 1 of 4	

50.2.3 Regulations

50.2.3.1 All work performed and any modifications made, must be compliant with the latest Canada Shipping Act Regulations and in particular to the Marine Machinery Regulations. All work shall meet Transport Canada approved class regulations.

50.2.4 Standards

50.2.4.1 All inspections and repairs to the satisfaction of the Chief Engineer and attending TCMS inspector.

50.2.4.1 NJC Occupational Health and Safety Standards- Food Prep. Area.

50.2.5 Quality Assurance Standards

50.2.5.1 As per the Contractors QA Program.

50.3 Technical

50.3.1 The contractor will purchase and install new Dampa style stainless steel brushed finish tiles type DCC 308, rating B-0, 300mm with 25mm inlay of mineral wool to match existing tiles as laid out in ceiling plan included.

50.3.2 The contractor is to supply and install all trim pieces; Dampa Edge Trim # 13 @ 2000 mm length in brushed stainless to match.

50.3.3 If alternate ceiling tiles are supplied of different manufacture, the contractor is responsible for all mounting arrangements at contractor's expense.

50.3.4 The contractor will also supply 10% extra tiles in standard factory length for spares.

50.3.5 The contractor will remove and dispose of all old tiles and trim pieces and secure all new tiles and trim pieces.

50.3.6 All disposals will be at the contractor's expense and will be as required by local provincial regulations.

50.3.7 All removable tiles will be secured to the mounting clips using new stainless steel screws.

50.3.8 The contractor is responsible for drilling and tapping all holes.

50.3.9 All non-movable pieces (trim pieces) may be secured with stainless steel rivets.

50.3.10 The contractor will be responsible for all cut outs in tiles and for attached equipment included and not included in the original drawings. All lights, fire system equipment and electronics equipment will be re-installed in the previous area.

50.3.11 The contractor will be responsible for all cutting of tiles to fit as needed.

50.3.12 Any equipment damaged during removal and installation will be replaced at contractors expense.

50.3.13 Distributor for Dampa ceilings in North America is
Jim McInerney
P.O. Box 70, Duncraig East L.P.O.
Western Australia, 6023
Phone: +61 (0) 8 9302 5777
Web: www.ceilingworks.com.au
Email: sales@ceilingworks.com.au

50.4 Proof of Performance

50.4.1 Inspection

50.4.1.1 All installations will be to the satisfaction of the Chief Engineer.

50.4.2 Testing/Trials

50.4.2.1 All equipment attached to the ceiling tiles will be tested for correct operation. (intercom, fire detection, lights, fire suppression, alarms).

50.4.3 Certification

50.4.3.1 Dampa or equivalent supplied tiles shall have accompanied certificate denoting fire rating, original certificate to be presented to the Chief Engineer prior to the start of work.

50.5 Deliverables

50.5.1 Documentation (Reports/Drawings/Manuals)

50.5.1.1 Three hard copies and one electronic pdf copy of all certificates and catalog cuts denoting details of panels supplied.

50.5.2 Spares

50.5.2.1 The Contractor shall supply 10% additional tiles in standard length and 10% of trim pieces over and above that which is required to carry out the work.

50.5.2.2 The Contractor is responsible for the safe stowage of these spare materials and to hold these spares till the completion of the VLE refit period.

50.5.2.3 Spares to be placed onboard, and stowed at the direction of the Chief Engineer for shipping to the vessels home port.

50.5.3 Training

50.5.3.1 N/A.

51.0 VHF FM RENEWAL

51.1 Identification (Refit)

51.1.1 The intent of this specification is to remove four (4) Sailor VHF-FM transceivers with associated connecting equipment and cabling, and install three (3) Sailor VHF-FM transceivers with connecting equipment and cabling.

51.1.2 Owner supplied VHF System Equipment only required for this specification item.

52.2 References

52.2.1 Equipment Data

52.2.1.1 The contractor shall supply all materials, equipment, and parts required to perform the specified work unless otherwise stated.

52.2.2 Drawings

Drawing Number	Description	Electronic Number
13-0073-01	General Arrangement – Navigation Bridge Deck and Wheelhouse	
13-0069-01	Antenna Arrangement	
MM654-021-BD	Radio System Block Diagram Electronics Equipment Room	
MM654-019-BD	Radio System Block Diagram Wheelhouse	
MM654-020-BD	Radio System Block Diagram Radio Room	
Preliminary	Sailor VHF-FM 6222 #1, #2, #3	
	Sailor 6222 VHF Installation Manual	
	Navigation Console Layout	
654012DE	Navigation Console Equipment Layout	

52.2.3 Standards

52.2.3.1 Fleet Safety and Security Manual (DFO/5737)

52.2.3.2 TP127E – Ships Electrical Standards.

52.2.3.3 IEEE 45:2002 – Recommended Practice for Electrical Installations on Ships.

52.2.3.4 Specification for the Installation of Shipboard Electronic Equipment (70-000-000-EU-JA-001).

52.2.3.5 General Information for the Rules and Regulations for the Classification of Ships.

52.2.4 Regulations

52.2.4.1 Canada Shipping Act, 2001

52.3 Technical

52.3.1 The contractor shall supply all equipment, enclosures, ventilation, staging, chain falls, carnage, slings, and shackles necessary to perform the work. All lifting equipment shall be appropriate for the expected duties, and be accompanied by current certification indicating, or be permanently marked as to being, or a safe working load for the expected duties.

52.3.2 Prior to any hot work taking place, the contractor shall ensure that the area of work and all equipment, wiring, transits, etc. have been sufficiently protected from any sparks or metal filings.

52.3.3 All cabling, once installed, shall be marked with a stamped metal tag securely affixed to the cable at each end with the designation for each cable as provided in this specification.

52.3.4 All cabling shall follow existing cable trays throughout the vessel where fitted. Once installed, all cabling shall be secured as per TP127. Contractor shall re-use existing cable penetrations and repack with LRS approved products. Alternatively, contractor may choose to replace the existing glands with new Roxtec, or equal LRS approved glands.

52.3.5 For the purpose of adjustments, the contractor shall include a unit cost for the supply and install for one (1) roxtec, or equal LRS approved glands.

52.3.6 The contractor shall dispose of all cables that have been identified for removal indicated below.

52.3.7 The contractor shall be responsible to ensure that all areas have been thoroughly cleaned and free of any debris resulting from the performance of this specification item.

52.3.8 Prior to the commencement of any electrical work, the contractor shall ensure that all electrical supplies feeding the systems have been isolated at the source following an established lockout/tagout procedure.

52.3.9 Upon final installation, testing shall be carried out as per Section 53.4.2 of this specification item.

52.3.10 Contractor shall remove the four (4) Sailor VHF-FM RT146 systems complete with connecting control/antenna cables as well as the four (4) transmitting/receiving antennas complete with clamping hardware, and power supplies, as detailed in the reference drawings attached.

Removals for Sailor RT146 VHF #1

- Sailor transceiver and Power Supply located in electronics equipment room rack #22 at frame 118 on navigation bridge deck and wheelhouse
- RG214 antenna cable from same equipment rack to main mast frame 130 up through gland to middle spar starboard side to upright antenna, and associated antenna and fixing hardware. Cable length 30 meters
- Control cable from same equipment rack to frame 135 on navigation bridge aft port doorway H-410 box. Both C-403 remote head and H-410 connection box shall be removed. Cable length 30 meters.
- Control Cable from H-410 connection box aft port doorway to starboard bearing repeater H-410 box frame 143. Both C-403 remote head and H-410 connection box shall be removed. Cable length 15 meters.
- Supply circuit in rack 22 in electronics equipment room shall be removed from cct#1 on TEP-103 panel in same room to equipment rack location. Cable length 8 meters. Contractor shall supply and install a new 14/3 marine AC cable from this circuit to wheelhouse navigation console starboard side for connection to new equipment. Contractor shall supply and install a new duplex receptacle at this location.

Removals for Sailor RT146 VHF #2

- Sailor transceiver and Power Supply located in electronics equipment room rack #22 at frame 118 on navigation bridge deck and wheelhouse.
- RG214 antenna cable from same equipment rack to main mast frame 130 up through gland to middle spar port side to inverted antenna, and associated antenna and fixing hardware. Cable length 30 meters.
- Control cable from same equipment rack to frame 135 on navigation bridge aft starboard doorway H-410 box. Both C-403 remote head and H-410 connection box shall be removed. Cable length 30 meters.
- Control cable from H-410 connection box aft starboard doorway to port bearing repeater H-410 box frame 143. Both C-403 remote head and connection box shall be removed. Cable length 15 meters.

Removals for Sailor RT146 VHF #3

- Sailor transceiver and Power Supply located starboard side of bridge navigation console at frame 141.
- RG214 cable from sailor transceiver location to main mast frame 130 up through gland to upper spar port side to upright antenna, and associated antenna and fixing hardware. Cable length 40 meters.
- Control cable from transceiver to H-410 box at starboard side of chart able. Both C-403 remote head and H-410 connection box shall be removed. Cable length 2 meters.

- Control cable from starboard side of chart table H-410 box to forward information console port. Both C-403 remote head and H-410 connection box shall be removed. Cable length 12 meters.

Removals for Sailor RT146 VHF #4

- Sailor transceiver, splitter box and power supply located in Radio Room located on navigational bridge deck at frame 122 port equipment rack #1.
- Control cable from H-410 in rack #22 to commanding officers cabin frame 148. Cable length 30 meters.
- RG213 cable from equipment rack #22 in radio room to main mast frame 130 up through gland to lower spar port side to inverted antenna, and associated antenna and fixing hardware. Cable length 35 meters.

52.3.11 For the purpose of adjustment, contractor shall provide a unit cost per meter for the removal and disposal of each type of cable.

52.3.12 Contractor shall install three (3) Sailor VHF 6222 Radio systems complete with power supplies, connecting control cable and antenna cable, connection boxes, as well as three (3) VHF antennas complete with clamping hardware (stainless steel hardware only).

Installation for Sailor RT6222 VHF #1

- Contractor shall mount the new Sailor radio in the starboard side of the chart table (See equipment console layout drawing) and the associated power converter in the console in the same vicinity. The new radio shall be flush mounted by cutting the console using the template in the installation manual. Exact location to be determined on site.
- Contractor shall supply and install two (2) LMR400 UF-FR coax cables from this radio location aft to frame 130 up through gland. One cable shall be ran to the upper spar port side to where old antenna was removed. The other shall be ran to middle spar port side to where old antenna was removed. Cable lengths are 30 and 40 meters.
- Contractor shall install (owner supplied antennas) in the same configuration as the ones that were removed. Contractor shall be responsible for supplying all fixing hardware (stainless steel only).
- Contractor shall supply and install 6 pair individually shielded pairs 18awg marine shipboard cable as follows;
  - o From starboard side of chart table to the starboard bearing repeater were old remote control head was removed.
  - o From starboard side of chart table to port aft wheelhouse door where old remote control head was removed.
- Contractor shall install owner supplied connection boxes and Control Speaker Microphones at these locations where the old remote control heads were located.
- Contractor shall install owner supplied power supply where the old one was removed in the starboard side of bridge navigation console.

Installation for Sailor RT6222 VHF #2

- Contractor shall flush mount the new Sailor radio in the port side of the chart table (See equipment console layout drawing) and the associated power converter in the console in the same vicinity. The new radio shall be flush mounted by cutting the console using the template in the installation manual. Exact location to be determined on site.
- Contractor shall supply and install two (2) LMR400 UF-FR coax cables from this radio location aft to frame 130 up through gland. One cable shall be ran to the middle spar starboard side to where old antenna was removed. The other shall be ran to the lower spar port side to where old antenna was removed. Cable lengths are 30 and 40 meters.
- Contractor shall install (owner supplied antennas) in the same configuration as the ones that were removed. Contractor shall be responsible for supplying all fixing hardware (stainless steel only).
- Contractor shall supply and install 6 pair individually shielded pairs 18awg marine shipboard cable as follows;
- From the port side of chart table to the starboard aft wheelhouse door were old remote control head was removed.
- From the port side of chart table to the port bearing repeater where old remote was removed.
- Contractor shall install owner supplied connection boxes and Control Speaker Microphones at these locations where old remote control heads were located.
- Contractor shall install owner supplied power supply where the old Sailor transceiver was previously removed in starboard side of bridge navigation console.

Installation for Sailor RT6222 VHF #3

- Contractor shall flush mount the new Sailor radio in the forward overhead right console. The new radio shall be flush mounted in a contractor supplied panel in the space previously occupied by wind speed and direction indicator.
- Contractor shall supply and install two (2) LMR400 UF-FR coax cables from this location to forward wheelhouse top port and starboard sides. Two (2) penetrations with two (2) kickpipes with watertight glands shall be installed for routing coax cable to the forward railing. Exact locations to be determined on site.
- Contractor shall install (owner supplied antennas) at these locations. Contractor shall be responsible for supplying all fixing hardware (stainless steel only).
- Contractor shall supply and install 6 pair individually shielded pairs 18awg marine shipboard cable as follows:
- From forward overhead right console to forward port information console where old remote was removed.
- Contractor shall install owner supplied connection box and Control Speaker Microphone at the location where old remote control head was removed.
- Contractor shall install owner supplied power supply, power converter, and connection box (x2) at the rear of console where new radio is installed.

52.3.13 Contractor shall supply and install 2 pair 22awg cable x3 from GPS distribution in starboard side of bridge navigation console to each of the new VHF Radio's.

52.3.14 For the purpose of adjustment, contractor shall provide a unit cost per meter for the supply and install of each type of cable.

52.3.15 Contractor shall label all cables with stamped metal tags at both ends affixed to cables as identified in reference drawings.

52.4 Proof of Performance

52.4.1 Inspection

52.4.1.1 All work shall be subject to witness by the Chief Engineer of delegate and the attending TCMS surveyor.

52.4.2 Testing/Trials

52.4.2.1 All cables are to be checked for continuity after installation to ensure operational capability. Should any cable run fail to pass testing, the cable shall be replaced at the contractor's expense.

52.4.2.2 All cable testing shall be verified by a Coast Guard Technician.

52.4.2.3 New AC/DC circuits shall be proven operational.

52.4.2.4 Electronic equipment which has been removed for the performance of this specification item shall be returned to operational condition.

52.4.3 Certification

52.4.3.1 N/A.

52.5 Deliverables

52.5.1 Reports/Drawings/Manuals

52.5.1.1 The contractor shall provide the Chief Engineer with a report of the contractors work in both electronic and hardcopy formats outlining the details of the inspections and any alterations / repairs prior to the acceptance of this item.

52.5.2 Spares

52.5.2.1 All owner supplied cable which has not been used shall be returned to the owner prior to the acceptance of the item.

52.5.3 Training

52.5.3.1 N/A.

52.0 SPEED LOG RENEWAL

52.1 Identification (Refit)

52.1.1 The intent of this specification is to remove the existing Doppler Speed Log System and Install a new Doppler Speed Log.

52.1.2 This work shall be carried out in Conjunction with the following specifications, VHF-FM Replacement, DGPS Replacement, and Navtex Replacement. All refit specification items and shall be updated by the contractor prior to all production meetings.

52.1.3 Owner supplied Doppler Speed Log System only required for this specification item.

52.1.4 Contractor shall supply all materials, and parts required to perform the specified work unless otherwise stated.

52.2 References

52.2.1 Equipment Data

52.2.1.1 Location:
Navigating Bridge Deck
Bridge Void Space
Lower Deck
Tank Top

52.2.2 Drawings

Drawing Number	Description	Electronic Number
34-0858-01	Doppler Speed Log System (Existing)	
Preliminary	Naviknot 450 D Doppler Speed Log Wiring Diagram	
	CCGS Henry Larsen Wheelhouse Navigation Console Layout	
MM654-012-DE	Wheelhouse Navigation Console Connection Layout	
13-0078-01	Docking Plan	
4983-0112-01	Doppler Speed Log Transducer and Sea Chest for Steel and Aluminum Vessels (Sheet 1 of 2)	
4983-0112-01	Doppler Speed Log Transducer and Sea Chest for Steel and Aluminum Vessels (Sheet 2 of 2)	
13-0072-01	General Arrangement – Profile	
13-0073-01	General Arrangement – Navigation Bridge Deck and Wheelhouse	

13-0077-01	General Arrangement – Main Deck	
	General Arrangement – Lower Deck	
Manual Supplied With Equipment	Doppler Transducers, Gate Valve and Tank Mount and Preamplifier Type 5005 for Doppler Speed Log Systems Naviknot	5005-0125-01 Rev P Jan 2013
Manual Supplied with Equipment	Operation, Installation and Service Manual	056800 Rev P Jan 2013

52.2.3 Regulations

52.2.3.1 Canada Shipping Act, 2001

52.2.4 Standards

52.2.4.1 Fleet Safety and Security Manual (DFO/5737)

52.2.4.2 TP127E – Ships Electrical Standards.

52.2.4.3 IEEE 45:2002 – Recommended Practice for Electrical Installations on Ships.

52.2.4.4 Specification for the Installation of Shipboard Electronic Equipment (70-000-000-EU-JA-001)

52.2.4.5 General Information for the Rules and Regulations for the Classification of Ships.

52.2.4.6 CWB, Welding Procedures.

52.3 Technical

52.3.1 The contractor shall supply all equipment, enclosures, ventilation, staging, chain falls, carnage, slings, and shackles necessary to perform the work. All lifting equipment shall be appropriate for the expected duties, and be accompanied by current certification indicating, or be permanently marked as to being, or a safe working load for the expected duties.

52.3.2 Prior to any hotwork taking place, the contractor shall ensure that the area of work and all equipment, wiring, transits, etc. have been sufficiently protected from any sparks or metal filings.

52.3.3 All cabling, once installed, shall be marked with a stamped metal tag securely affixed to the cable at each end with the designation for each cable as provided in this specification.

52.3.4 All cabling shall follow existing cable trays throughout the vessel where fitted. Once installed, all cabling shall be secured as per TP127.

52.3.5 All cabling which has been deemed surplus as a result of this specification item shall be disposed of at the contractor's expense.

52.3.6 The contractor shall be responsible to ensure that all areas have been cleaned and free of any debris resulting from the performance of this specification item.

52.3.7 Prior to the commencement of any electrical work, the contractor shall ensure that all electrical supplies feeding the systems have been isolated at the source following an established lockout/tagout procedure.

52.3.8 Upon final installation, testing shall be carried out as per Section 52.4.2 of this specification item.

52.3.9 Contractor shall remove the following equipment:

- Master Display Unit flush mounted in navigation console
- Remote Display located in Navigation Chart Room
- Electronics Unit located in Bubbler Manifold Compartment Port Side
- Junction Box DLJB-1 mounted adjacent to the dopper speed log transducer
- Doppler Speed Log Transducer with gate valve located between frames 155 and 156.

52.3.10 Contractor shall remove the following cabling:

- All cables from SRD-331 Master Display to interconnect equipment, except DL-3.
- Cable DL-1 from Doppler speed log transducer to DLJB-1, cable length 3m. The cable is part of transducer.
- Cable DL-2 from DLJB-1 in transducer compartment to the Sperry SRD331 electronics unit in Bubbler Manifold Compartment Port Side.
- Cables DL-5, DL-6, DL-7, and DL-8 from master display as shown in reference drawing 34-0858-01.
- Cable P-108A-1A from TB50 to SRD-331 Slave Display located in Special Navigation Chart Room as shown in reference drawing 34-0858-01.
- Cable from SRD-331 Master Display to Sperry ADG-6000 steering stand.
- Cable from SRD-331 Master Display to Slave Radar Display Starboard side of wheelhouse.
- Cable from SRD-331 Master Display to AFT looking radar located on the port side forward console.

52.3.11 Contractor shall be responsible for mounting the following equipment:

- Owner supplied Gate Valve for transducer shall be welded in place where the old was removed referencing the installation manual section 3.1 for gate valve installation. All procedures shall be adhered to.
- Owner supplied Preamplifier D shall be mounted in the Bubbler Manifold Compartment where old electronics unit was removed. Contractor shall reference the installation manual Chapter 5: Installation, Section 5.1 Mechanical Installation for mounting instructions.

- Owner supplied Electronics Unit shall be mounted in the void crawl space directly under the bridge navigation console.
- Contractor shall supply and install a mounting plate fifty-one (51) inches by twenty-four (24) inches of ¼ inch aluminum located in the center area of the void crawl space in the area of the fiber optic connection boxes. Contractor is responsible for all necessary hardware for mounting of plate. Contractor shall reference the installation manual document # 056352 Chapter 5 section 5.1 mechanical installation. Once installed contractor shall provide the necessary hardware for the securing of cables from the cable trays to equipment location. Securing distance not to exceed 300mm.
- Owner supplied Control and Display Unit shall be flush mounted in the bridge navigation console in the space vacated by the old master display unit. Contractor shall reference document # 056352, Chapter 5 section 5.1 console frame version and cutout drawing 0012-0112-02 of that document. Contractor shall supply the necessary hardware for proper flush mounting. Contractor shall reference the CCGS Henry Larsen Wheelhouse Navigation Console Layout from VHF-FM Replacement Specification for location of unit.
- Owner supplied 24Vdc power supply shall be mounted in the area of the electronics unit in the void crawl space.
- Owner supplied Universal Digital Repeater (UDR) x2 and junction boxes x2 shall be installed in the forward deck head of each bridge wing (port & starboard). Contractor shall provide the necessary hardware for mounting these repeaters and junction boxes to ensure sturdiness.
- Owner supplied Universal Digital Repeater (UDR) x2 and junction boxes x2 be installed in the forward bridge console and in the special navigation chart room. Exact locations to be determined prior to install.
- Contractor shall supply and install a junction box completed with 24 weildmueller type terminal blocks in the location of the power supply and electronics unit with six (6) penetrations to allow cable entry complete with cable glands of an approved type.

52.3.12 Contractor shall run/reroute the following cable;

- Run Speed Log transducer cable (60296, 36 meter factory cable) from gate valve to Bubbler Manifold Compartment Port Side, where the old electronics unit was removed. Cable shall be labelled with a stamped metal tag with the designation DL-1 at both ends of the cable as well as both sides of any bulkhead/deck penetration it passes through.
- Supply and install new 3C 14AWG marine approved supply cable from power Terminal TB50 navigation console starboard side to bridge void crawl space power supply location. Cable shall be labelled with a stamped metal tag with the description P-108A-1 at both ends of the cable as well as both sides of any bulkhead/deck penetrations it passes through.
- Reroute DL-3 from master display in navigation chart console on the bridge to bridge void crawl space to new power supply location.
- Reroute DL-4 from master display in navigation chart console on the bridge to bridge void crawl space to new electronics unit.

- Supply and install Belden 9369 cable from new junction box to UDR junction box in port overhead bridge wing.
- Supply and install Belden 9369 cable from new junction box to UDR junction box in starboard overhead bridge wing.
- Supply and install Belden 9369 cable from new junction box to UDR junction box in forward bridge console.
- Supply and install Belden 9369 cable from new junction box to UDR junction box in special navigation chart room.
- Supply and install Belden 9388 cable from Control and display unit in navigation chart console to electronics unit in bridge void crawl space. A junction box shall be provided to make the connection as the CDU is supplied with 3 meter pigtail as seen in reference drawing.
- Supply and install Belden 9516 cable from electronics unit to junction box nearby as seen in reference drawing.
- Supply and install Belden 9314 cable (x2) from power supply to electronics unit and from power supply to junction box as seen in reference drawing.
- Supply and install Belden 9328 (x7) from electronics unit to aft looking radar display unit, to slave display unit, to x-band radar display unit, to s-band radar display unit, to autopilot SCU, to GPS distribution, and electronics room in the area of the gyro as seen in reference drawing.

52.3.13 For the purpose of adjustments, the contractor shall include a unit cost for the supply and install of 10 meters of each type cable used.

52.3.14 Contractor shall label all cabling as outlined in reference drawing CCGS Henry Larsen Naviknot 450 D Doppler Speed Log Wiring Diagram with metal tags at both ends of the cable as well as both sides of any bulkhead/deck penetration it passes through.

52.4 Proof of Performance

52.4.1 Inspection

52.4.1.1 All work shall be subject to witness by the Chief Engineer of delegate and the attending surveyor.

52.4.2 Testing/Trials

52.4.2.1 The contractor shall arrange for OEM authorized field service representative (FSR) to conduct the set to work and commissioning of the Doppler Speed Log Naviknot 450D system. Perform Doppler Transducer Calibration 2 Way Trial Runs as per Chapter 7, section 7.2 of the supplied Operation, Installation, and Service Manual (056352/C). Record the setup in the configuration table in Appendix A of the same manual. A copy shall be provided to CCG.

52.4.2.2 All cables are to be checked for continuity after installation to ensure operational capability. Should any cable run fail to pass testing, the cable shall be replaced at the contractor's expense.

52.4.2.3 All cable testing shall be verified by a Coast Guard Technician.

52.4.2.4 New AC/DC circuits shall be proven operational.

52.4.2.5 Electronic equipment which has been removed for the performance of this specification item shall be returned to operational condition as it will be used as spares for similar equipment used in CCG fleet.

52.4.3 Certification

52.4.3.1 All original Class approval certificates for all system components shall be submitted to the owner prior to acceptance of this item.

52.5 Deliverables

52.5.1 Drawings/Reports/Manuals

52.5.1.1 The contractor shall provide the Chief Engineer with a report of the contractors work in both electronic and hardcopy formats outlining the details of the inspections and any alterations / repairs to the acceptance of this item.

52.5.2 Spares

52.5.2.1 All owner supplied cable which has not been used shall be returned to the owner prior to the acceptance of the item.

52.5.3 Training

52.5.3.1 N/A.

53.0 CCTV INSTALLATION

53.1 Identification (Refit)

53.1.1 The intent of this specification is to remove the existing CCTV Camera system and install a new CCTV Camera system.

53.1.2 This work shall be carried out in Conjunction with the following specifications; ICS System, and Master Clock System. All refit specification items and shall be updated by the contractor prior to all production meetings.

53.1.3 Owner supplied CCTV System and Equipment Racks only required for this specification item.

53.1.4 Contractor shall supply all materials, and parts required to perform the specified work unless otherwise stated.

53.1.5 Contractor is responsible for the identification of interference items, their temporary removal, storage, and refitting to vessel.

53.2 References

53.2.1 Equipment Data

52.2.1.1 Location:
Navigating Bridge Deck and Wheelhouse Top
Officers Deck
Flight and Boat Deck
Upper Deck
Main Deck
Lower Deck

53.2.2 Drawings

Drawing Number	Description	Electronic Number
13-0073-01	General Arrangement – Navigation Bridge Deck and Wheelhouse	
13-0074-01	General Arrangement – Officers Deck	
13-0075-01	General Arrangement – Flight/Boat Deck	
13-0076-01	General Arrangement – Upper Deck	
13-0072-01	General Arrangement – Profile with CCTV Locations	
N/A	CCTV System	
N/A	AXIS T91A61 Wall Bracket	

	Dimensional Drawing	
N/A	AXIS Q6044-E PTZ Dome Dimensional Drawing	
	Middle Atlantic Equipment Racks	

53.2.3 Standards

53.2.3.1 Fleet Safety and Security Manual (DFO/5737).

53.2.3.2 TP127E – Ships Electrical Standards

53.2.3.3 IEEE 45:2002 – Recommended Practice for Electrical Installations on Ships.

53.2.3.4 Specification for the Installation of Shipboard Electronic Equipment (70-000-000-EU-JA-001).

53.2.3.5 Standard Technical Architecture for Shipboard Computer Systems.

53.2.4 Regulations

53.2.4.1 Canada Shipping Act, 2001.

53.2.4.2 General Information for the Rules and Regulations for the Classification of Ships.

53.3 Technical

53.3.1 The contractor shall supply all equipment, enclosures, ventilation, staging, chain falls, carnage, slings, and shackles necessary to perform the work. All lifting equipment shall be appropriate for the expected duties, and be accompanied by current certification indicating, or be permanently marked as to being, or a safe working load for the expected duties.

53.3.2 Prior to any hotwork taking place, the contractor shall ensure that the area of work and all equipment, wiring, transits, etc. have been sufficiently protected from any sparks or metal filings.

53.3.3 All cabling, once installed, shall be marked with a stamped metal tag securely affixed to the cable at each end and on each side of any penetration with the designation for each cable as provided in this specification.

53.3.4 Contractor shall follow existing cable trays throughout the vessel where fitted. Once installed, all cabling shall be secured as per TP127. Contractor shall re-use existing cable penetrations and repack with LRS approved products. Alternatively,

contractor may choose to replace the existing glands with new Roxtec, or equal LRS approved glands.

53.3.5 For the purpose of adjustment the contractor shall include a unit cost for the supply and install for one (1) roxtec, or equal LRS approved transit with glands.

53.3.6 The contractor shall dispose of all cables that have been identified for removal indicated below.

53.3.7 The contractor shall be responsible to ensure that all areas have been thoroughly cleaned and free of any debris resulting from the performance of this specification item.

53.3.8 Prior to the commencement of any electrical work, the contractor shall ensure that all electrical supplies feeding the systems have been isolated at the source following an established lockout/tagout procedure.

53.3.9 Upon final installation, testing shall be carried out as per Section 53.4.2 of this specification item.

53.3.10 Contractor shall remove the following equipment;

- Three (3) CCTV cameras (forward mast lower platform, aft mast x2).
- Fixed camera junction box located at frame 133 aft bridge stairwell
- Aft camera power supply and video distribution amp in emergency generator room.

53.3.11 Contractor shall remove all connecting CCTV cable as follows;

- Bosch MIC Cable -25m from aft mast camera to power supply located in the thermal fluid tank compartment (Retain this cable and return to CCG)
- Composite cable from power supply in thermal fluid tank compartment to the AC Chiller Room. Cable length 12 meters.
- RG-6 cable from bridge crawl space frame 136 to the Samsung DVR in the electronics equipment room frame 120. Cable length 30 meters
- RG-6 cable from electronic equipment room frame 120 to cctv monitor port bridge deckhead frame 145. Cable length 40 meters.
- RG-6 from cctv monitor port bridge deckhead to cctv monitor to starboard deckhead. Cable length 15 meters
- 2 Cat5e cables from electronics equipment room rack frame 120 to the port and starboard bridge wing consoles frame 144. Cable lengths 35 meters
- Composite cable and junction box from fixed camera lower forward mast platform to fixed camera junction box located at frame 133 aft bridge stairwell. Cable length 20 meters.
- RG-6 cable from junction box located at frame 133 aft bridge stairwell to electronics equipment room frame 120. Cable length 15 meters.
- RG-6 cable from junction box located at frame 133 aft bridge stairwell to engine control room frame 75 cctv monitor. Cable length 100 meters.

- Composite cable and junction box from fixed aft mast camera to aft camera power supply and video distribution amp in emergency generator room. Cable length 20 meters.
- RG-6 cable from aft camera power supply and video distribution amp in emergency generator room to engine control room frame 75. Cable length 60 meters.
- Remove AC feed from each camera power supply box to source P101 circuit 8&9 in engine control room. Cable lengths 100 meters and 60 meters. The two engine control room cctv monitors are connect to the same circuits and must remain.

53.3.12 For the purpose of adjustment, contractor shall provide a unit cost per meter for the removal and disposal of each type of cable.

53.3.13 Contractor shall supply and install these type cables Cat5e (1300SB Multi-Conductor – Category 5e ScTP Shipboard ABS Type Approved) and install Draka LSZH Fiber Optic Shipboard Cable (P/N: S454T-08-62G) as follows

CABLE LABEL	CABLE TYPE	FROM	TO
CCTV-7	1300SB CAT5e	Radio Room Rack	Exacqvision Web Server in Radio Room Rack
CCTV-8	1300SB CAT5e	Radio Room Rack Frame 120	Frame 144 Bridge Console Port Side 25 meters
CCTV-9	1300SB CAT5e	Radio Room Rack Frame 120	Frame 144 Bridge Console Starboard Side. 25 meters
CCTV-10	1300SB CAT5e	Radio Room Rack Frame 120	Frame 135 Quartermaster Station Port (Upper Deck). 75 meters
CCTV-11	1300SB CAT5e	Radio Room Rack Frame 120	Frame 135 Quarter Master Station Starboard (Upper Deck). 75 meters
CCTV-12	1300SB CAT5e	Radio Room Rack Frame 120	Frame 75 Engine Control Room. 125 meters
CCTV-13	1300SB CAT5e	Radio Room Rack Frame 120	Frame 75 Engine Control Room. 125 meters
CCTV-1	1300SB CAT5e	Radio Room Rack Frame 120	Bridge crawl space forward Port Side. 30 meters
CCTV-2	1300SB CAT5e	Radio Room Rack Frame 120	Bridge crawl space forward Starboard Side. 30 meters

CCTV-3	1300SB CAT5e	Radio Room Rack Frame 120	Main Mast frame 133 to lower platform under searchlight
CCTV-4	1300SB CAT5e	Radio Room Rack Frame 120	Frame 70 Aft mast upper platform under searchlight.
CCTV-5	1300SB CAT5e	Radio Room Rack Frame 120	Helicopter Hanger frame 63. 75 meters
CCTV-6	1300SB CAT5e	LAN Equipment Rack Engineers Office Upper DeckFrame 115	Under Flight Deck aft. 85 meters
LAN-1, LAN-2	LSZH Fiber Cable x 2	Radio Room Rack	Electronics Room LAN Rack (15 meters each)
LAN-3, LAN-4	LSHZ Fiber Cable x 2	Radio Room Rack	Engineers Office LAN Rack (30meters)
LAN-5	LSZH Fiber Cable	Engineers Office LAN Rack Upper Deck	Crews Lounge Main Deck (35 meters)

53.3.14 For the purpose of adjustment, contractor shall provide a unit cost for the supply and install for 10m each type of cable.

53.3.15 Contractor shall mount all six cameras (Port and Starboard Bridge Wings under catwalk outside the bridge), forward mast, aft mast, helicopter hanger inside, and under flight deck). See ships profile drawing with camera locations overlaid.

53.3.16 Contractor shall weld a 5/16” plate (same composite as attaching) capable of accepting the supplied wall mount bracket at each camera location. See attached dimensional drawing of the Axis T91A61wall bracket.

53.3.17 Contractor shall be responsible for penetrations for cctv cable (ie. Penetrations in void space under bridge to camera locations under catwalk). Contractor shall use LRS approved glands where cable penetrations are required.

53.3.18 Contractor shall mount for (2) computer monitors and (2) user stations in the following locations;

- Quarter Master Station Port & Starboard

53.3.19 To accommodate the CCTV control equipment the contactor shall remove the existing four (4) blue equipment racks in the radio room and install four (4) new owner supplied equipment racks.

53.3.20 To accommodate the installation of the 4 new racks the contractor may choose to modify existing mounting base or remove it entirely and install a completely new frame as the overall dimensions of the 4 new racks are 2” wider on each end and 8” deeper. See reference drawings attached.

53.3.21 All electrical supplies shall be isolated and retained as they shall be required to be reinstalled in new racks.

53.3.22 Contractor shall supply and install a cable management ladder from the top of one of the middle racks up through deckhead panel and attach accordingly. Deckhead panel shall be modified to accommodate this installation.

53.3.23 Contractor shall remove the existing LAN cabinet in the engineer's office and install a new owner supplied bulkhead mounted cabinet at new location to the right of the cabinet to be removed. Exact location to be determined onsite.

53.3.24 Contractor shall disconnect all fiber and Cat5 cable from the patch panel in existing cabinet and relocate to new cabinet location. Contractor shall be careful when routing this cable from old rack to new rack to avoid any damage.

53.3.25 Contractor shall remove all equipment in old cabinet and install in new cabinet.

53.3.26 Contractor shall supply and install 14/3C marine shipboard cable from the new cabinet noted above to the PO Lounge on main deck to existing electric clock location. Cable length 40 meters.

53.3.27 Contractor shall install a duplex receptacle on the end of the cable in PO Lounge and a junction box on the other end in new rack.

53.4 Proof of Performance

53.4.1 Inspection

53.4.1.1 All work shall be subject to witness by the Chief Engineer of delegate and the attending TCMS surveyor.

53.4.2 Testing/Trials

53.4.2.1 All cables are to be checked for continuity after installation to ensure operational capability. Should any cable run fail to pass testing, the cable shall be replaced at the contractor's expense.

53.4.2.2 All cable testing shall be verified by a Coast Guard Technician.

53.4.2.3 New AC/DC circuits shall be proven operational.

53.4.2.4 Electronic equipment which has been removed for the performance of this specification item shall be returned to operational condition.

53.4.2.5 Contractor shall follow the Standard Technical Architecture for Shipboard Computer Systems (section 5.2 Cable Testing Requirements) to perform tests and provide results as per Annex H and Annex I of this standard, on all new Category 5e and Fiber Optic Cable installed.

53.4.3 Certification

53.4.3.1 N/A.

53.5 Deliverables

53.5.1 Drawings/Reports/Manuals

53.5.1.1 The contractor shall provide the Chief Engineer with a typewritten report of the contractors work in both electronic and hardcopy formats outlining the details of the inspections and any alterations / repairs to the acceptance of this item.

53.5.2 Spares

53.5.2.1 All owner supplied cable which has not been used shall be returned to the owner prior to the acceptance of the item.

53.5.3 Training

53.5.3.1 N/A.

54.0 NAVTEX INSTALLATION

54.1 Identification (Refit)

54.1.1 The intent of this specification shall be to remove the existing Lokata Navtex receiver and install a new JRC Navtex receiver.

54.1.2 Owner supplied Navtex Receiver system only required for this specification item.

54.1.3 Contractor shall supply all materials and parts required to perform the specified work unless otherwise stated.

54.2 References

54.2.1 Equipment Data

54.2.1.1 Location:

Navigating Bridge Deck
Electronics Equipment Room
Wheelhouse Top

54.2.3 Drawings

General Arrangement Navigation Bridge Deck &Wheelhouse Drawing # 13-0073-01
Radio System Wheelhouse Equipment Drawing # MM654-019-BD
Navtex 2 Rx Block Diagram Drawing # MM654-069-BD
JRC Navtex NCR-333 Drawing # Preliminary
Navigation Console Layout Drawing # Preliminary
Wheelhouse Navigation Console Layout Drawing # MM654-012-DE

54.2.4 Standards

54.2.4.1 Fleet Safety and Security Manual (DFO/5737)

54.2.4.2 TP127E – Ships Electrical Standards

54.2.4.3 IEEE 45:2002 – Recommended Practice for Electrical Installations on Ships

54.2.4.4 Specification for the Installation of Shipboard Electronic Equipment (70-000-000-EU-JA-001).

54.2.5 Regulations

54.2.5.1 Canada Shipping Act, 2001

54.2.5.2 Rules and Regulations for the Classification of Ships.

54.3 Technical

54.3.1 The contractor shall supply all equipment, enclosures, ventilation, staging, chain falls, craneage, slings, and shackles necessary to perform the work. All lifting equipment shall be appropriate for the expected duties, and be accompanied by current certification indicating, or be permanently marked as to being, of a safe working load for the expected duties.

54.3.2 Prior to any hotwork taking place, the contractor shall ensure that the area of work and all equipment, wiring, transits, etc. have been sufficiently protected from any sparks of metal filings.

54.3.3 All cabling, once installed, shall be marked with a stamped metal tag securely affixed to the cable at each end with the designation for each cable as provided in this specification.

54.3.4 All cabling shall follow existing cable trays throughout the vessel where fitted. Once installed, all cabling shall be secured as per TP127.

54.3.5 All cabling which has been removed and deemed surplus as a result of this specification item shall be disposed of at the contractor's expense.

54.3.6 The contractor shall be responsible to ensure that all areas have been thoroughly cleaned and free of any debris resulting from the performance of this specification item.

54.3.7 Prior to the commencement of any electrical work, the contractor shall ensure that all electrical supplies feeding the systems have been isolated at the source following an established lockout / tagout procedure.

54.3.8 Upon final installation, testing shall be carried out as per section 54.4.2 of this specification.

54.3.9 Contractor shall remove the Lokata Navtex receiver and associated power supply item # 36 on wheelhouse general arrangement drawing (Bridge Port Side Navigation Console) complete with power supply and antenna cable.

54.3.10 Contractor shall remove the RG-58 cable from the Navtex receiver navigation console frame 142 to the antenna multi-coupler located in the electronics equipment room frame 120 equipment rack.

54.3.11 Contractor shall supply and install a new LMR240 cable from bridge navigation console to wheelhouse top. Cable length 30 meters.

54.3.12 Contractor shall remove the input power cable from UPS in void space to navtex power supply. Contractor shall supply and install a new AC cable marine shipboard type from UPS in void space to new navtex power supply location in starboard side of navigation console. Exact location to be determined onsite.

54.3.13 Contractor shall install new kickpipe 30cm high with gland on wheelhouse top to accommodate the new cable run. Location to be determined on site.

54.3.14 Contractor shall label the new LMR 240 RF cable with stamped metal tags at both ends affixed to cable identified as R-NAVTEX.

54.3.15 Contractor shall install the new navtex receiver with printer flush mounted in navigation console (See equipment console layout drawing), and power supply in starboard side of bridge navigation console. This will require the fabrication of a new panel for flush mounting the new receiver with printer in that space. The new panel to be fabricated shall be primed and painted to match existing.

54.4 Proof of Performance

54.4.1 Inspection

54.4.1.1 All work shall be subject to witness by chief engineer of delegate and the attending TCMS surveyor.

54.4.2 Testing/Trials

54.4.2.1 All cables are to be checked for continuity after installation to ensure operational capability. Should any cable run fail to pass testing, the cable shall be replaced at the contractor's expense.

54.4.2.2 All cable testing shall be verified by a Coast Guard Technician.

54.4.2.3 New AC/DC circuits shall be proven operational.

54.4.2.4 Electronic equipment which has been removed for the performance of this specification item shall be returned to operational condition.

54.4.3 Certification

54.4.3.1 N/A.

54.5 Deliverables

54.5.1 Drawings/Reports/Manuals

54.5.1.1 Contractor shall provide the Chief Engineer with a written report of the contractors work in both electronic and hardcopy formats (MS Word 2010 or later) outlining the details of the inspections and any alterations / repairs prior to the acceptance of this item.

54.5.2 Spares

54.5.2.1 N/A.

54.5.3 Training

54.5.3.1 N/A.

55.0 SAT "B" REPLACEMENT

55.1 Identification (Refit)

55.1.1 The intent of this specification shall be to replace the existing Inmarsat B system with a new Sailor Fleet Broadband 500 System.

55.1.2 This work shall be carried out in conjunction with the VHF Replacement project.

55.1.3 Owner supplied Inmarsat unit only required for this specification item.

55.1.4 Contractor shall supply all materials and parts required to perform the specified work unless otherwise stated.

55.2 References

55.2.1 Equipment Data

55.2.1.1 Sailor Fleetbroadband 500 Installation Manual

55.2.2 Drawings

General Arrangement Wheelhouse	Drawing # 13-0073-01
Antenna Arrangement	Drawing # 13-0069-01
Inmarsat B Block Diagram	Drawing # 65410301
Sailor Fleet BroadBand 500 Diagram	Drawing # Preliminary
Inmarsat B to FBB500 adapter plate	Drawing # N/A
Sailor Fleetbroadband 500 Installation Manual	

55.2.3 Standards

55.2.3.1 Fleet Safety and Security Manual (DFO/5737)

55.2.3.2 TP127E – Ships Electrical Standards

55.2.3.3 IEEE 45:2002 – Recommended Practice for Electrical Installations on Ships.

55.2.3.4 Specification for the Installation of Shipboard Electronic Equipment (70-000-000-EU-JA-001)

55.2.4 Regulations

55.2.4.1 Canada Shipping Act, 2001

55.2.4.2 Rules and Regulations for the Classification of Ships.

55.3 Technical

55.3.1 The contractor shall supply all equipment, enclosures, ventilation, staging, chain falls, craneage, slings, and shackles necessary to perform the work. All lifting equipment shall be appropriate for the expected duties, and be accompanied by current certification indicating, or be permanently marked as to being, of a safe working load for the expected duties.

55.3.2 Prior to any hotwork taking place, the contractor shall ensure that the area of work and all equipment, wiring, transits, etc. have been sufficiently protected from any sparks of metal filings.

55.3.3 All cabling, once installed, shall be marked with a stamped metal tag securely affixed to the cable at each end with the designation for each cable as provided in this specification.

55.3.4 All cabling shall follow existing cable trays throughout the vessel where fitted. Once installed, all cabling shall be secured as per TP127.

55.3.5 All cabling which has been removed and deemed surplus as a result of this specification item shall be disposed of at the contractor's expense.

55.3.6 The contractor shall be responsible to ensure that all areas have been thoroughly cleaned and free of any debris resulting from the performance of this specification item.

55.3.7 Prior to the commencement of any electrical work, the contractor shall ensure that all electrical supplies feeding the systems have been isolated at the source following an established lockout / tagout procedure.

55.3.8 Upon final installation, testing shall be carried out as per Section 55.4.2 of this specification.

55.3.9 Contractor shall remove the Inmarsat Saturn B Mk2 dome from the platform forward of the ships stack frame 104. When removed the contractor shall continue to remove the LMR400 cable in its entirety from antenna location to the below deck equipment located on the navigation bridge at frame 135 aft of the information console. Total length of cable is 50 meters. Contractor shall also disconnect the AC cable from the dome and put in a watertight junction box near the dome for future use near new dome. Electrical supply is via EP102 –17 in the electronics equipment room. Contractor shall be aware that if circuit is shared with another device. Shared device shall stay as is.

55.3.10 Contractor shall remove the AC cable from panel/circuit EP-101-3 in electronics equipment room labelled Ships Clock to Rack #22.

55.3.11 Contractor shall supply and install a new 14/3 shipboard marine AC cable from the circuit above to the Radio Room Racks for connection to new equipment.

55.3.12 Contractor shall supply install an adapter plate on existing platform once old Sat B dome is removed as shown in reference drawing attached. The adapter plate shall be of the same composite as attaching. Contractor shall prime and paint new adapter plate to match existing paint scheme. Once the adapter plate is installed the contractor shall install the new dome on the adapter plate.

55.3.13 Contractor shall follow the Fleetbroadband 500 installation manual when installing the new dome as proper torque setting are required when securing the new dome. To ensure proper grounding the area around the dome bushings shall be free of any paint.

55.3.14 Contractor shall supply and install (ecoflex 15 plus low loss cable) complete with N-type connectors for this type cable, from new dome location to Radio Room Racks at frame 123. Total length of cable is 40 meters. A stamped metal tag shall be affixed to cable at both ends as well as any bulkhead/deckhead it passes through with the designation SAC-1.

55.3.15 For the purpose of adjustments, contractor shall include a unit cost for the supply and install for 10 meters of each type cable.

55.3.16 Contractor shall supply and install four (4) Cat5e (1300SB ABS approved cable) from racks in the Radio Room Racks frame 123 to the bridge near bridge computer workstation area where old SatB system was removed. Contractor shall supply and install a new single gang face plate capable of taking four (4) Mini-Com modules in this space. Contractor shall also supply and install a proper back box for securing the face plate.

55.3.17 For the purpose of adjustments, contractor shall include a unit cost for the supply and install for 10 meters of this type cable.

55.3.18 Contractor shall install new Sailor Fleet Broadband 500 Handset and message terminal in the space vacated by the old handset and message terminal.

55.3.19 Contractor shall label all cables with stamped metal tags as per the reference drawing attached.

55.3.20 Contractor shall remove the following components of the Inmarsat B system as shown in the reference drawings attached:

- Distress Alarm Indicator
- Message Indicator
- Sat B Handset
- MCU SatB Terminal
- Data Com Switch DCU
- Power Supply 28Vdc

All these components are located on the bridge in the area of the bridge computer workstation desk.

55.4 Proof of Performance

55.4.1 Inspection

55.4.1.1 All work shall be subject to witness by chief engineer of delegate and the attending TCMS surveyor.

55.4.2 Testing/Trials

55.4.2.1 All cables are to be checked for continuity after installation to ensure operational capability. Should any cable run fail to pass testing, the cable shall be replaced at the contractor's expense.

55.4.2.2 All cable testing shall be verified by a Coast Guard Technician.

55.4.2.3 New AC/DC circuits shall be proven operational.

55.4.3 Certification

55.4.3.1 N/A.

55.5 Deliverables

55.5.1 Drawings/Reports/Manuals

55.5.1.1 Contractor shall provide the Chief Engineer with a written report of the contractors work in both electronic and hardcopy formats outlining the details of the inspections and any alterations / repairs to the acceptance of this item.

55.5.2 Spares

55.5.2.1 All owner supplied cable which has not been used shall be returned to the owner prior to the acceptance of this item.

55.5.3 Training

55.5.3.1 N/A.

56.0 MASTER CLOCK

56.1 Identification (Refit)

56.1.1 The intent of this specification is to remove the existing ships master clock and install new master clock system.

56.1.2 This work shall be carried out in conjunction with Asbestos Abatement, ICS specification, CCTV, and Inmarsat B replacement spec.

56.1.3 Contractor supplied Power over Ethernet master clock system is required for this specification item.

56.1.4 Contractor shall supply all materials and parts required to perform the specified work unless otherwise stated.

56.2 References

56.2.1 Equipment Data

56.2.1.1 Locations:

Navigating Bridge Deck
Bridge Deck
Forcastle Deck
Upper Deck
Main Deck
Lower Deck

56.2.1.2 Contractor is responsible for the identification of interference items, their temporary removal, storage, and refitting to vessel.

56.2.2 Drawings

Antenna Arrangement	Drawing # 13-0069-01
Wheelhouse Top General Arrangement	Drawing # 13-0073-01
Wheelhouse General Arrangement	Drawing # 13-0073-01
Officers Deck General Arrangement	Drawing # 13-0074-01
Flight and Boat Deck General Arrangement	Drawing # 13-0075-01
Upper Deck General Arrangement	Drawing # 13-0076-01
Main Deck General Arrangement	Drawing # 13-0077-01
Lower Deck Fwd General Arrangement	Drawing #
Lower Deck Aft General Arrangement	Drawing #
Electric Clock System	Drawing # 34-0849-01
Power Over Ethernet Clock System	Drawing # Preliminary

56.2.3 Standards

56.2.3.1 Fleet Safety and Security Manual (DFO/5737).

56.2.3.2 TP127E – Ships Electrical Standards.

56.2.3.3 IEEE 45:2002 – Recommended Practice for Electrical Installations on Ships

56.2.3.4 Specification for the Installation of Shipboard Electronic Equipment (70-000-000-EU-JA-001)

56.2.3.5 Rules and Regulations for the Classification of Ships

56.2.3.6 "Standard Technical Architecture for Shipboard Computer Systems".

56.2.4 Regulations

56.2.4.1 Canada Shipping Act, 2001.

56.3 Technical

56.3.1 The contractor shall allow for the supply of a MCR5000 Masterclock System, or Equal, with the following components;

- One (1) Master Clock MCR5000
- One (1) MCR-DS6D date/day display
- One (1) MCR-DS6T time display
- One (1) MCR-GPS-Stnd GPS receiver w/gps antenna and mounting kit
- One (1) MCR-HSO-2 high stability oscillator
- One (1) MCR-NTP, NTP reference time server
- One (1) SA90-SMA gps inline surge arrestor
- One (1) PKG-2 gps antenna cable
- One (1) NMEA 0183 input NMEA Software
- Forty (40) CLKNTD12 Bulkhead mountable time protocol (NTP) analog clocks with POE and rear brackets.

56.3.2 The contractor shall supply all equipment, enclosures, ventilation, staging, chain falls, craneage, slings, and shackles necessary to perform the work. All lifting equipment shall be appropriate for the expected duties, and be accompanied by current certification indicating, or be permanently marked as to being, of a safe working load for the expected duties.

56.3.3 Prior to any hotwork taking place, the contractor shall ensure that the area of work and all equipment, wiring, transits, etc. have been sufficiently protected from any sparks of metal filings.

56.3.4 All cabling, once installed, shall be marked with a stamped metal tag securely affixed to the cable at each end with the designation for each cable as provided in reference drawings.

56.3.5 All cabling shall follow existing cable trays throughout the vessel where fitted. Once installed, all cabling shall be secured as per TP127. Contractor shall re-use existing cable penetrations and repack with LRS Approved products. Alternatively, Contractor may choose to replace the existing glands with new Roxtec, or Equal LRS Approved glands.

56.3.6 For the purpose of adjustments, the contractor shall include a unit cost for the supply and install for one (1) roxtec, or equal LRS approved glands.

56.3.7 The Contractor shall remove and dispose of all 40 cables (2TW PR SC #16) as shown in reference drawings attached. Total cable removal totals 400 meters. For the purpose of adjustment, contractor shall provide a unit cost per meter of removal.

56.3.8 Contractor shall be responsible to ensure that all areas have been thoroughly cleaned and free of any debris resulting from the performance of this specification item.

56.3.9 Prior to the commencement of any electrical work, the contractor shall ensure that all electrical supplies feeding the systems have been isolated at the source following an established lockout / tagout procedure. Copies of Lagout documents are to be presented to the Chief Engineer prior to start of work.

56.3.10 Upon final installation, testing shall be carried out as per Section 56.4.2 of this specification.

56.3.11 Contractor shall remove Master clock in the electronics equipment room rack #22. Contractor shall isolate remove the supply circuit EP-101-3 from this rack to electrical panel in the same room. This is circuit will be used in the Inmarsat Replacement spec.

56.3.12 Contractor shall remove five (5) junction boxes as shown in reference drawings.

56.3.13 The contractor shall remove 34 clocks as shown in reference drawings.

56.3.14 Contractor shall supply and install 700 meters of Cat5e (1300SB Multi-Conductor – Category 5e ScTP Shipboard ABS Type Approved). For the purpose of adjustment contractor shall provide a unit cost for the supply and install of 10 meters of this type cable.

56.3.15 Contractor shall supply and install (15) Cat5e (1300SB Multi-Conductor – Category 5e ScTP Shipboard ABS Type Approved) from the Radio Room rack to the locations shown on the reference drawings were old clocks were removed. Cable terminations at the clock locations shall be done using the following;

- PanCJ5E88TBU (CJ5E88TBU Modular Jack Cat5e)
- PanCFP1WH (CFP1WH 1 Port Face Plate)

Connection from termination point to clock will be made via a short Cat5e patch cord. CCG Production Techs shall be responsible for all terminations. Contractor shall be responsible for mounting the clocks in the space vacated by the old. The new clock diameter shall match existing diameters or the contractor shall mount backing plates to cover the difference.

56.3.16 Contractor supply and install (6) Cat5e (1300SB Multi-Conductor – Category 5e ScTP Shipboard ABS Type Approved) from the crews lounge to the locations shown on reference drawings where old clocks were removed. Cable terminations at the clock locations shall be done using the following;

- PanCJ5E88TBU (CJ5E88TBU Modular Jack Cat5e)
- PanCFP1WH (CFP1WH 1 Port Face Plate)

Contractor shall supply and install 32 of each item above for each clock location.

Connection from termination point to clock will be made via a short Cat5e patch cord. CCG Production Techs shall be responsible for all terminations. Contractor shall be responsible for mounting the clocks in the space vacated by the old. . The new clock diameter shall match existing diameters or the contractor shall mount backing plates to cover the difference.

56.3.17 Contractor shall supply and install an additional (4) Cat5e (1300SB Multi-Conductor – Category 5e ScTP Shipboard ABS Type Approved) two (2) from the crew's lounge on Main Deck to the midpoint in each hallway on that deck, and (2) from the engineers office Lan Cabinet to the midpoint in each hallway on that deck.

56.3.18 Contractor supply and install belden 9913 coax cable (supplied with equipment) from radio room rack frame 122 to frame 120 on wheelhouse top port side railing for connection to GPS antenna that is used as a source of timing for the master clock. CCG technical representative will identify the exact location on antenna.

56.3.19 Contractor shall supply and install a finished wooden frame to match the color scheme on bulkhead in the crews lounge forward in the space occupied by the old clock to incorporate new clock and owner supplied PoE 8 port HP Switch. The frame shall be hinged to open down for access to PoE switch.

56.3.20 Contractor shall supply and install one ¾" kickpipe 12" high below antenna location frame 122 with water tight gland for antenna cable.

56.3.21 Coast Guard Technicians shall be responsible for cable terminations.

56.4 Proof of Performance

56.4.1 Inspection

56.4.1.1 All work shall be subject to witness by chief engineer of delegate and the attending TCMS surveyor.

56.4.2 Testing/Trials

56.4.2.1 All cables are to be checked for continuity after installation to ensure operational capability. Should any cable run fail to pass testing, the cable shall be replaced at the contractor's expense.

56.4.2.2 All cable testing shall be verified by a Coast Guard Technician.

56.4.2.3 New AC/DC circuits shall be proven operational.

56.4.2.4 Contractor shall follow the Standard Technical Architecture for Shipboard Computer Systems (section 5.2 Cable Testing Requirements) to perform tests and provide results as per Annex H and Annex I of this standard, on all new Category 5e and Fiber Optic Cable installed.

56.4.3 Certification

56.4.3.1 N/A.

56.5 Deliverables

56.5.1 Drawings/Reports/Manuals

56.5.1.1 Contractor shall provide the Chief Engineer with a written report of the contractors work in both electronic and hardcopy formats outlining the details of the inspections and any alterations / repairs to the acceptance of this item.

56.5.1.2 The Contractor shall ensure that all operation, maintenance, and installation Manuals/CD's that are supplied with new equipment are submitted to the Owner prior to the acceptance of this item.

56.5.2 Spares

56.5.2.1 All owner supplied cable which has not been used shall be returned to the owner prior to the acceptance of this item.

56.5.3 Training

56.5.3.1 N/A.

57.0 IMIC3 INSTALLATION

57.1 Identification (Refit)

57.1.1 The contractor shall supply and install all cables and material as specified in this document for the installation of an IMIC3 system.

57.2 References

57.2.1 Equipment Data

57.2.1.1 The contractor shall supply all materials, equipment, and parts required to perform the specified work unless otherwise stated.

57.2.1.2 Frame, 112 to 140

57.2.1.3 Contractor is responsible for the identification of interference items, their temporary removal storage and refitting to vessel.

57.2.2 Drawings

Drawing # 13-0069-01 Antenna Layout
Drawing # 13-0073-01 General Arrangement Navigation Bridge Deck
Drawing # 13-0074-01 General Arrangement Officers Deck
Drawing # 13-0075-01 General Arrangement Flight/Boat and Forecastle
Drawing # 13-0076-01 General Arrangement Upper Deck

57.2.3 Standards

57.2.3.1 All work performed on DFO ships, by contractors, shall be in compliance with the safety standards as indicated by the Fleet Safety Manual DFO/5737. Particular attention should be paid to sections:
7. B.2 - Fall Protection.
7. D.9 - Entry into Enclosed Spaces.
7. D.11 - Hot Work.
7. D.19 - Lockout Tag Out

57.2.4 Regulations

57.2.4.1 Cables shall be installed in accordance with marine standards cable installations TP 127E Specifications for Installation of Shipboard Equipment, Part 1.13 Construction of Cables and Part 1.14 Installation of Cables.

57.3 Technical

57.3.1 Contractor shall install the cables as specified in the following table:

- All cables shipyard supplied unless otherwise specified (CCG Supplied)
- All cables to be screened unless otherwise specified

Cable Name	Cable Type	Approximate cable Length in Ft	From (see picture 2 for Bridge Desk)	To
Network	Cat5e	100	Bridge Desk	Captain's Cabin Desk
Sensor	CCG Supplied	120	Bridge Desk	Antenna (see picture 1)
AIS	Belden 9322 or equivalent	60	Bridge Desk	Bridge FWD console port side (see picture 5)
Arpa X	Belden 9322 or equivalent	40	Bridge Desk	X Rader Bridge center Bridge (see picture 3)
Arpa S	Belden 9322 or equivalent	60	Bridge Desk	S Radar Bridge STBD Bridge (see picture 4)
DGPS	Belden 9322 or equivalent	60	Bridge Desk	Bridge DD20 splitters center console STBD side (see picture 6)
Ant	Cat5 (CCG Supplied)	120	Bridge Desk	Antenna (see picture 1)
AC #1 (receptacle)	2X14AWG	60	Bridge Desk	Bridge Deck EL 102 BKR 18
AC #2 Ant Heat	2X14AWG	60	Bridge Desk	Bridge Deck P106 BKR 7
AC #3 (receptacle)	2X14AWG	100	Captain's Cabin Desk	Bridge deck EL 102 BKR 17 (Breaker Required)
AC #4 Ant Heat	2X14AWG	120	Bridge Desk	Antenna (see picture 1)

57.3.2 Contractor shall cut 2 inch hole and weld a 2 inch gooseneck pipe, CCG supplied, on Monkeys Island as indicated in picture 1.

57.3.3 Contractor shall remove deckheads, bulkheads and any other panels for access to cable raceway to install new cables.

57.3.4 Contractor shall reinstall deckheads, bulkheads and any other panels that were removed for this project when installations of cables and gooseneck pipe are completed.

57.3.5 Contractor is responsible for any penetrations and the installation of feed thru glands, marine water tight and fire proof, to preform cable installations.

57.3.6 Contractor is responsible to run cables in existing cable trays (cables must be supported) and strap cables to cable trays every 2 feet with electrical cable ties.

57.3.7 Contractor shall replace the full length of cable if for some reason a cable obtains damaged during the installation.

57.3.8 Any surfaces affected by the removal of panels and the running of new cables are to be re-finished to match existing.

57.3.9 All new and disturbed metal if applicable are to be primed and painted to match existing including the CCG supplied gooseneck pipe with marine grade coatings.

57.4 Proof of Performance

57.4.1 Inspection

57.4.1.1 All work shall be completed to the satisfaction of the Chief Engineer.

57.4.1.2 All work shall be subject to witness by chief engineer of delegate and the attending TCMS surveyor.

57.4.2 Testing/Trials

57.4.2.1 TEW (CCG) Technician shall perform continuity tests and confirm acceptance of cables.

57.4.3 Certification

57.4.3.1 N/A.

57.5 Deliverables

57.5.1 Drawings/Reports/Manuals

57.5.1.1 Contractor shall provide to the Chief Engineer a notice of completion report in MS Word 2010 or later.

57.5.2 Spares

57.5.2.1 N/A.

57.5.3 Training

57.5.3.1 N/A.

57.5.5 Pictures

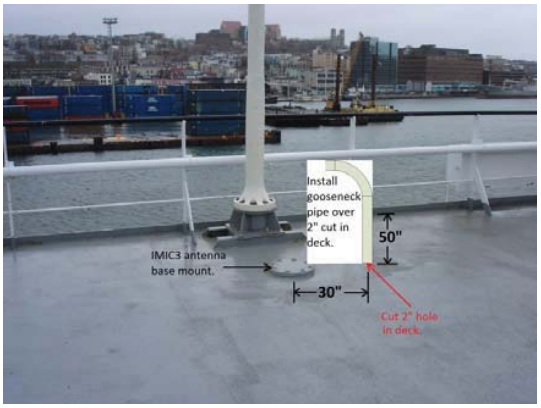

Picture 1: 2” hole and welding location for gooseneck

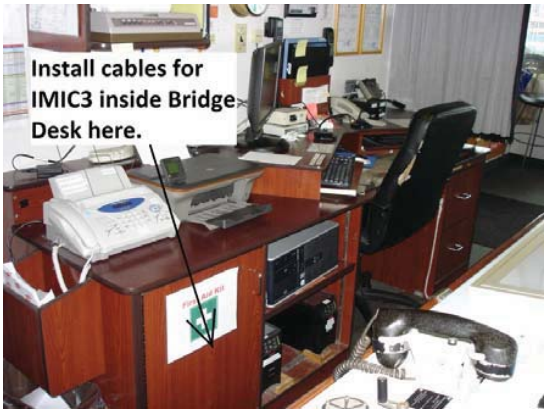

Picture 2: Bridge Desk Location for Cable installation

Picture 3: X Band Radar Location for cable run

Picture 4: S Band Radar Location for cable run

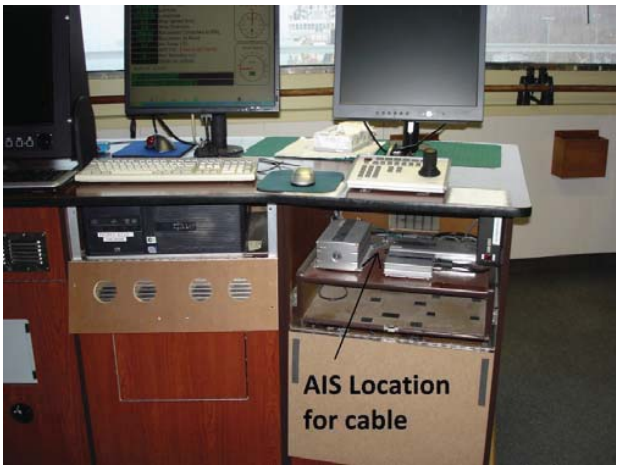

Picture 5: AIS Location for cable run

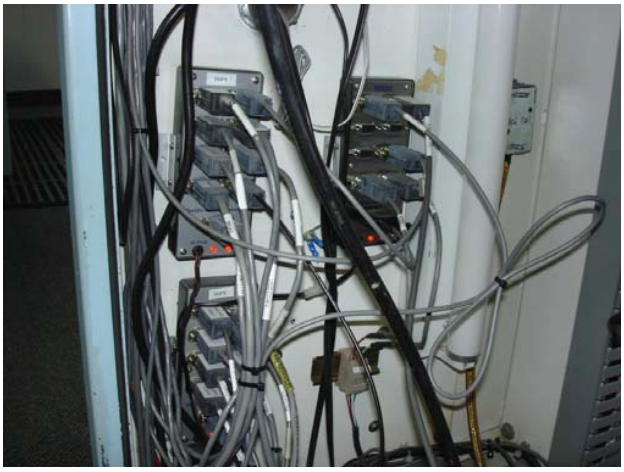
Picture 6: DGPS Location for cable (STBD Console)

58.0 DUAL GPS/DGPS INSTALLATION (REFIT)

58.1 Identification

58.1.1 The intent of this specification is to remove the existing Northstar 941X GPD/DGPS system and install a new Dual Furuno GP-150D GPS/DGPS system.

58.1.2 This work shall be carried out in Conjunction with the following specifications, Doppler Speed Log, Navtex Replacement, and VHF-FM Replacement. All refit specification items shall be updated by the contractor prior to all production meetings.

58.1.3 Owner supplied equipment only required for this specification item.

58.1.4 Contractor shall supply all materials, and parts required to perform the specified work unless otherwise stated.

58.2 References

58.2.1 Equipment Data

58.2.1.1 Dual Furuno GP-150D GPS/DGPS system

58.2.1.2 See Appendix "L" for detail.

58.2.2 Drawings

Drawing Number	Description	Electronic Number
13-0069-01	CCGS Henry Larsen Antenna Arrangement	
Preliminary	CCGS Henry Larsen Dual Furuno GP-150D System Block Diagram	
13-0073-01	General Arrangement Navigation Bridge Deck & Wheelhouse	
	CCGS Henry Larsen Navigation Console Layout Block	
MM654-012-DE	CCGS Henry Larsen Navigation Console Layout	
Manual Supplied with Equipment	Furuno GP150 Installation Manual	
Manual Supplied with Equipment	Furuno GP150 Operators Manual	
Manual Supplied with Equipment	Furuno IF-2500 Operators Manual	

65410601	CCGS Henry Larsen GPS Systems Block Diagram	

58.2.3 Standards

58.2.3.1 Fleet Safety and Security Manual (DFO/5737).

58.2.3.2 TP127E – Ships Electrical Standards.

58.2.3.3 IEEE 45:2002 – Recommended Practice for Electrical Installations on Ships.

58.2.3.4 Specification for the Installation of Shipboard Electronic Equipment (70-000-000-EU-JA-001).

58.2.3.5 General Information for the Rules and Regulations for the Classification of Ships.

58.2.3.6 CWB, Welding Procedures.

58.2.4 Regulations

58.2.4.1 Canada Shipping Act, 2001.

58.3 Technical

58.3.1 The contractor shall supply all equipment, enclosures, ventilation, staging, chain falls, carnage, slings, and shackles necessary to perform the work. All lifting equipment shall be appropriate for the expected duties, and be accompanied by current certification indicating, or be permanently marked as to being, or a safe working load for the expected duties.

58.3.2 Prior to any hotwork taking place, the contractor shall ensure that the area of work and all equipment, wiring, transits, etc. have been sufficiently protected from any sparks or metal filings.

58.3.3 All cabling, once installed, shall be marked with a stamped metal tag securely affixed to the cable at each end with the designation for each cable as provided in this specification.

58.3.4 All cabling shall follow existing cable trays throughout the vessel where fitted. Once installed, all cabling shall be secured as per TP127.

58.3.5 All cabling which has been deemed redundant as a result of this specification item shall be disposed of at the contractor's expense.

58.3.6 The contractor shall be responsible to ensure that all areas have been cleaned and free of any debris resulting from the performance of this specification item.

58.3.7 Prior to the commencement of any electrical work, the contractor shall ensure that all electrical supplies feeding the systems have been isolated at the source following an established lockout/tagout procedure. Copy of all Lock Out documents are to be presented to the Chie Engineer prior to start of work.

58.3.8 Upon final installation, testing shall be carried out as per Section 58. 4.2 of this specification item.

58.3.9 Contractor shall remove the following equipment:

- Northstar 941X Display unit from Navigation Chart Console.
- Northstar Antenna located on the wheelhouse top starboard side. Contractor shall reference the antenna arrangement drawing for antenna location.
- Battery unit located behind Northstar 941X display labeled GPS #2.
- GPS Selector switch located on port side of navigation chart console.
- Antenna splitter located behind the Northstar 941X display.
- Contractor shall reference drawing GPS Systems Block Diagram drawing # 65410601.

58.3.10 Contractor shall remove the following cabling:

- Coaxial cable from Northstar 941X display unit to antenna.
- All cabling from Northstar 941X display unit to interconnect equipment. This includes cable to GPS selector switch located on port side of navigation chart console and to GPS distribution units DD20 located on starboard side of navigation chart console.
- Cables from antenna splitter to Northstar display unit.
- Power cable from Northstar display unit to battery unit.

58.3.11 Contractor shall be responsible for mounting the following equipment:

- Owner supplied Furuno GP-150D (x2) display units. Contractor shall flush mount both units as referenced in the CCGS Henry Larsen Wheelhouse Navigation Chart Console Layout. Contractor shall provide all the necessary mounting hardware for flush mounting.
- Owner supplied Furuno GPS/DGPS antenna (x2) and owner supplied mounting antenna hardware on wheelhouse top. Location to be determined prior to installation.
- Owner supplied Furuno PR-62 rectifer's (x2) located in the wheelhouse navigation chart console starboard. Location to be determined prior to installation. Contractor shall supply and install all hardware and fabricate any mounting plates for the purpose of mounting the rectifier's.
- Owner supplied Furuno IF-2500 Interface Unit (x1) located where existing Navtex power supply in the navigation chart console. Contractor shall provide all mounting hardware for the purpose of mounting the interface unit. Location to be determined prior to installation.

58.3.12 Contractor shall run the following cables;

- Contractor shall supply and install Belden 9328 cable to be run from the Furuno IF-2500 Interface Unit to the following locations:
- One (1) cable run to GPS Distribution DD20 units located on starboard side of navigation chart console.
- One (1) cable run to X-Band radar processor located on the port side next to the navigation chart console.
- One (1) cable run to S-Band radar processor located on the port side of wheelhouse forward console.
- One (1) cable run to Naviknot 450 D Doppler Speed Log Electronics Unit located in the center of the void crawl space under the Navigation Bridge.
- Two (2) cable runs to Electronics Equipment Room in the area of the Fiber Optic Gyro Compass Interface and Power Supply Units.

- Contractor shall supply and install Belden 9314 cable to be run from the following:
- Two (2) runs from Furuno PR-62 #1 to Furuno GP150D #1
- Two (2) runs from Furuno PR-62 #2 to Furuno GP150D #2

- Contractor shall supply, install, and terminate a marine approved 3C 14 AWG AC cable for the following:
- From power panel P-108A breaker # 8 navigation bridge chart console to Furuno Rectifier PR-62 #1
- From power panel P-108A breaker #20 navigation bridge chart console to Furuno Rectifier PR-62 #2
- Contractor shall follow proper lock-out/tag-out procedures to isolate the source of power for each system.

- Contractor shall supply and install LMR-240 coaxial cable for the following:
- One (1) run from Furuno GP150D #1 to Furuno GPA-018 antenna #1 starboard side of wheelhouse top where existing antenna is located.
- One (1) run from Furuno GP150D #2 to Furuno GPA-018 antenna starboard side of wheelhouse top where existing antenna is located.

58.3.13 For the purpose of adjustments, the contractor shall include a unit cost for the supply and install 10 meters of each type of cable used.

58.3.14 Contractor shall label all cabling as outlined in reference drawing CCGS Henry Larsen CCGS Henry Larsen Dual Furuno GP150D System Block Diagram with metal tags at both ends of the cable as well as on both sides of any bulkhead/deck penetration it passes through.

58.3.15 All equipment terminations shall be completed by Coast Guard Technicians.

58.3.16 Contractor is responsible for the identification of interference items, their temporary removal, storage, and refitting to vessel.

58.3.17 Locations:

- Navigating Bridge Deck

- Wheelhouse Top
- Void Crawl Space
- Wheelhouse Void Crawl Space
- Electronics Equipment Room Bridge Deck

58.4 Proof of Performance

58.4.1 Inspection

58.4.1.1 All work shall be subject to witness by the Chief Engineer of delegate and the attending surveyor.

58.4.2 Testing/Trials

58.4.2.1 All cables are to be checked for continuity after installation to ensure operational capability. Should any cable run fail to pass testing, the cable shall be replaced at the contractor's expense.

58.4.2.2 All cable testing shall be verified by a Coast Guard Technician.

58.4.2.3 New AC/DC circuits shall be proven operational.

58.4.2.4 Electronic equipment which has been removed in section 58.3.9 for the performance of this specification item shall be returned in operational condition as it will be used as spares for similar equipment used in CCG fleet.

58.4.3 Certification

58.4.3.1 All original Class approval certificates for all system components shall be submitted to the owner prior to acceptance of this item.

58.5 Deliverables

58.5.1 Drawings/Reports/Manuals

58.5.1.1 The contractor shall provide the Chief Engineer with a type written report of the contractors work in both electronic and hardcopy formats outlining the details of the inspections and any alterations / repairs to the acceptance of this item.

58.5.2 Spares

58.5.2.1 All owner supplied cable which has not been used shall be returned to the owner prior to the acceptance of the item.

58.5.3 Training

58.5.3.1 N/A.

59.0 LIFERAFT SERVICING

59.1 Identification

59.1.1 The intent of this item is to arrange the vessel's eight liferafts for annual servicing.

59.1.2 Contractor is to utilise OEM Authorised Service provider only.

59.1.3 Contractor is to arrange for servicing to coincide as closely as possible with the completion of the refit period.

59.2 Equipment Data

59.2.1 Equipment Data

59.2.1 There are eight liferafts onboard to be sent for servicing as follows:

I. 10 Person Serial # B10=1999
II. 10 Person Serial # B10=1618
III. 25 Person Serial # XDC5EN02A808
IV. 25 Person Serial # XDC5EN01A808
V. 25 Person Serial # XDC5EV41B909
VI. 25 Person Serial # XDC9EJ12C707
VII. 25 Person Serial # XDCEK06C707
VIII. 25 Person Serial # XDCOEK12C707

59.2.2 Drawings

59.2.2.1 N/A.

59.2.3 Regulations

59.2.3.1 All work performed and any modifications made, must be compliant with the latest Canada Shipping Act Regulations and in particular to the Marine Machinery Regulations. All work shall meet Transport Canada approved class regulations.

59.2.4 Standards

59.2.4.1 N/A.

59.2.5 Quality Assurance Standards

59.2.5.1 AS per the Contractors QA program.

59.3 Technical

59.3.1 The Contractor is to remove and transport the ship's eighth liferafts to and from an authorized service center, for servicing.

59.3.2 The Contractor is responsible for all costs incurred to remove, transport, and the reinstallation of the liferafts.

59.3.3 All costs of standard annual servicing will be included in the Contractors bid.

59.4 Proof of Performance

59.4.1 Inspections

59.4.1.1 Inspection by TCMS Surveyor is to be arranged by OEM sub.

59.4.2 Testing/Trials

59.4.2.1 Testing as required by OEM and TCMS.

59.4.3 Certification

59.4.3.1 Contractor is to provide OEM authorization documentation from subcontractor to the Chief Engineer.

59.5 Deliverables

59.5.1 Documentation (Reports/Drawings/Manuals)

59.5.1.1 The contractor to supply original inspection certificates to be given to the Chief Engineer.

59.5.1.2 The contractor is to supply priced invoices for all liferafts, with an itemized list of all service and parts used to the Chief Engineer and Contracting Officer.

59.5.2 Spares

59.5.2.1 N/A.

59.5.3 Training

59.5.3.1 N/A.

60.0 RELIEF VALVE CERTIFICATION

60.1 Identification

60.1.1 There are 17 air, and heating fluid safety relief valves which require recertification for TC/MS. The Contractor is to remove these valves and transport them to a recognized facility for testing and recertification.

60.2 References

60.2.1 Equipment Data

60.2.1.1

VALVE	LOCATION	S/N	TYPE	SET POINT	SIZE
#1 Thermal Heating Unit	Heating Space	L85	Kunkle 910 J 122	100 PSI	2”X 3””
#2 Thermal Heating Unit	Heating Space	L85	Kunkle 910 J 122	100 PSI	2”X 3””
Emergency Air Receiver	Emergency D/G Rm	TH02745	Consolidated 1990C-1	3200 kpa	1”
Main Air Receiver (Fwd)	Upper Engine Room (S)	NV 3921	Kunkle 264	465 PSI	1”
Main Air Receiver (Aft)	Upper Engine Room (S)	NV 3924	Kunkle 264-1	465 PSI	1”
Ship Service Starting Air	Upper Engine Room (S)	N/V 3920	Kunkle 6010EEM01-KM	140 PSI	1”
Whistle Air Tank	Stack	N/V 3690	Kunkle 6010FFM01-KM	140 PSI	1 ¼ ”
Main Starting Air Comp (Fwd)	Upper Engine Room (S)	630312	Hamworthy 40409	37 Bar	¾”Bsp
Main Starting Air Comp (Fwd)	Upper Engine Room (S)	93945	Hamworthy 40410	7 Bar	1 ¼ ” Bsp
Main Starting Air Comp (Aft)	Upper Engine Room (S)	31862113	Hamworthy 40409	33 Bar	¾” Bsp
Main Starting Air Comp (Aft)	Upper Engine Room (S)	31852148	Hamworthy 40410	7 Bar	1 ¼” Bsp
Service Air Comp #1	Upper Engine Room (S)	09/07-00492	Lorch 2124	7.5 Bar	½” Bsp
Service Air Comp #1	Upper Engine Room (S)	92396	Hamworthy 40410	4.8 Bar	1” Bsp
Service Air Comp #2	Upper Engine Room (S)	90798	Hamworthy 40408	7.6 Bar	½” Bsp
Service Air Comp #2	Upper Engine Room (S)	31862154	Hamworthy 40410	6 Bar	1” Bsp

Service Air Reducing Station	Upper Engine Room (S)	NV1169	6010EDM01-AM	50 PSI	¾”
Reducing Station to Service Air	Upper Engine Room (S)		6010EEM01-AM	140 PSI	1”

60.2.2 Drawings

60.2.2.1 N/A.

60.2.3 Regulations

60.2.3.1 All work performed and any modifications made, must be compliant with the latest Canada Shipping Act Regulations and in particular to the Marine Machinery Regulations. All work shall meet Transport Canada approved class regulations.

60.2.4 Standards

60.2.4.1 As per TCMS.

60.2.5 Quality Assurance Standards

60.2.5.1 As per the Contractors QA Program.

60.3 Technical

60.3.1 The Contractor shall be responsible for all inspections and is to consult with TC/MS, prior to commencement of work, to determine an inspection schedule; at each inspection point, the Contractor is to advise the Technical Authority, in advance, to allow his/her attendance.

60.3.2 Lock-out of air inlet valves shall be on a case-by-case basis by ship’s personnel, with TFHU’s being isolated at the respective circuit breaker/MCC by the ship’s Electrical Officer.

60.3.3 Air relief valves shall be removed in such a way as to allow ship service air to the vessel to remain uninterrupted as much as possible; the Contractor is to provide 24 hours notice of any interruption of ship service air supply to allow ship’s personnel to make alternative arrangements, if required.

60.3.4 Suitable blanks/plugs are to be installed in the piping/receivers while the safety valves are removed; the Technical Authority (or designate) are to witness the removal of the blanks/plugs upon reinstallation of the relief valves.

60.3.5 Contractor-supplied thread sealant or new gasket material is to be used on re-installation; connections are to be proven leak-free, using the medium normally contained in the receiver/piping at operating pressure.

60.3.6 The Contractor is to allow for any adjustments required as a result of the above recertification procedures.

60.3.7 Any repairs required over and above cleanup, adjustment and recertification will be adjusted by 1379 action.

60.4 Proof of Performance

60.4.1 Inspections

60.4.1.1 All relief valve testing will be witnessed by the Chief Engineer and TCMS Surveyor as required.

60.4.2 Testing/Trials

60.4.2.1 All Test procedures are to be to the requirements of TCMS.

60.4.2.2 The Contractor is responsible to arrange for inspection.

60.4.2.3 All test certificates are to be issued as closely as possible to the end of the VLE/Refit period.

60.4.3 Certification

60.4.3.1 Original test certificates are to be supplied to the Technical Authority within three working days of the completion of all work.

60.5 Deliverables

60.5.1 Documentation (Reports/Manuals/Drawings)

60.5.1.1 Two hard copies and 1 electronic copy of all readings will be given to the Chief Engineer.

60.5.2 Spares

60.5.2.1 N/A.

60.5.3 Training

60.5.3.1 N/A.

61.0 FM 200 AND CO 2 SYSTEMS

61.1 Identification

61.1.1 The intent of this specification is to carry out the annual safety inspection of the FM-200 Fixed Fire Suppressant System(s) and CO 2 systems fitted to the vessel. All systems shall be surveyed by TCMS. Contractor shall be responsible for scheduling the TCMS surveyor.

61.1.2 The systems shall be thoroughly examined and serviced by an Authorized Kidde distributor manufacturer's qualified technician. Annual maintenance is to comply with applicable National Fire Protection Association standards. Inspection certificates, satisfactory to TCMS's shall be provided for all systems.

61.1.3 The Contractor is to use a certified Kidde FSR to service the vessel's FM200 and CO2 system and certified Notifier FSR to test and certify the interconnection to the Notifier Fire Alarm System.

61.1.4 Prior to starting this specification the Contractor is to provide proof of Certifications.

61.2 References

61.2.1 Equipment Data

61.2.1.1

Serial Number	Tare Weight	Gross Weight	Net Weight	Last H-Test Date
2 x FM-200 - 675 lb Cylinder ADS - Propulsion Motor Rm Upper				
288092 54	380.4	919.8	539.4	
288089 54	380.2	918	537.8	
Serial Number	Tare Weight	Gross Weight	Net Weight	Last H-Test Date
1 x FM200 Fireboy - Barge				
79304	0	0	15	

Serial Number	Tare Weight	Gross Weight	Net Weight	Last H-Test Date
1 x 1 lb CO2 Remote Pull - Cargo Hold				
515896	3.31	5.51	2	2009
Serial Number	Tare Weight	Gross Weight	Net Weight	Last H-Test Date
1 x 15 lb CO2 System - Paint Locker Upper Deck				
2005497	18	33	15	2014
Serial Number	Tare Weight	Gross Weight	Net Weight	Last H-Test Date
1 x 2.5 gallon Range Guard System - Galley				
65092			2.5	2011
Serial Number	Tare Weight	Gross Weight	Net Weight	Last H-Test Date
8 x 45 kg. CO2 System Ginge-Kerr - Cargo Hold				
379404	72.7	117.7	45	2009
379253	73.7	118.7	45	2009
379252	71.8	116.8	45	2009
379271	70.6	115.6	45	2009
379349	72.5	117.5	45	2009
379234	71.5	116.5	45	2009
379213	72.1	117.1	45	2009
379393	72.7	117.7	45	2009
Serial Number	Tare Weight	Gross Weight	Net Weight	Last H-Test Date
1 x 45 kg. CO2 System Ginge-Kerr - Main Engine Centre				
379390	71.9	116.9	45	2009
Serial Number	Tare Weight	Gross Weight	Net Weight	Last H-Test Date
1 x 45 kg. CO2 System Ginge-Kerr - Main Engine Port				
379411	75.8	120.8	45	2009
Serial Number	Tare Weight	Gross Weight	Net Weight	Last H-Test Date
1 x 45 kg. CO2 System Ginge-Kerr - Main Engine STBD				
379386	73.1	118.1	45	2009
Serial Number	Tare Weight	Gross Weight	Net Weight	Last H-Test Date
1 x 45 kg. CO2 System Ginge-Kerr - Propulsion Motor Port				
379201	72.4	117.4	45	2009
Serial Number	Tare Weight	Gross Weight	Net Weight	Last H-Test Date
1 x 45 kg. CO2 System Ginge-Kerr - Propulsion Motor STBD				
379256	70.6	115.6	45	2009
Serial Number	Tare Weight	Gross Weight	Net Weight	Last H-Test Date
1 x FM 200 - 125 lb. Cylinder ECS - Electronics Room				
290515	91.2	162.2	71	

Serial Number	Tare Weight	Gross Weight	Net Weight	Last H-Test Date
1 x FM 200 - 125 lb. Cylinder ECS - Fan Room 222				
290529 20	91.2	168	76.8	
Serial Number	Tare Weight	Gross Weight	Net Weight	Last H-Test Date
1 x FM 200 - 20 lb. Cylinder ECS - Battery Locker				
286917	28.2	40.2	12	
Serial Number	Tare Weight	Gross Weight	Net Weight	Last H-Test Date
1 x FM 200 - 200 lb. Cylinder ECS - AC Chiller Room				
288630 37.5 cm	127.8	264.2	136.4	
Serial Number	Tare Weight	Gross Weight	Net Weight	Last H-Test Date
1 x FM 200 - 200 lb. Cylinder ECS - Central Stores				
288644 50	127.4	291.4	164	
Serial Number	Tare Weight	Gross Weight	Net Weight	Last H-Test Date
1 x FM 200 - 200 lb. Cylinder ECS - Emergency Generator Room				
288633 50	127.2	282.4	155.2	
Serial Number	Tare Weight	Gross Weight	Net Weight	Last H-Test Date
1 x FM 200 - 200 lb. Cylinder ECS - Fan Room #2/4				
288640 45	127.8	280.6	152.8	
Serial Number	Tare Weight	Gross Weight	Net Weight	Last H-Test Date
1 x FM 200 - 200 lb. Cylinder ECS - Scientific Room / Chart Room				
288628 27.5 cm	127.8	239.4	111.6	
Serial Number	Tare Weight	Gross Weight	Net Weight	Last H-Test Date
1 x FM 200 - 350 lb. Cylinder ECS - Bubbler Room				
282084 62	195.8	536.2	340.4	
Serial Number	Tare Weight	Gross Weight	Net Weight	Last H-Test Date
1 x FM 200 - 350 lb. Cylinder ECS - Heli-Fuel Coffer Dam				
284123 29.5 cm	199.8	429	229.2	
Serial Number	Tare Weight	Gross Weight	Net Weight	Last H-Test Date
1 x FM 200 - 350 lb. Cylinder ECS - Incinerator Room				
300042 62	127.8	315	187.2	
Serial Number	Tare Weight	Gross Weight	Net Weight	Last H-Test Date
1 x FM 200 - 350 lb. Cylinder ECS - Thermal Fluid Expansion				
281978 29	196.2	410.8	214.6	
Serial Number	Tare Weight	Gross Weight	Net Weight	Last H-Test Date
1 x FM 200 - 40 lb. Cylinder ECS - Fan Room #1				
290978	37.6	66.6	29	

Serial Number	Tare Weight	Gross Weight	Net Weight	Last H-Test Date
1 x FM 200 - 40 lb. Cylinder ECS - ICS Room				
290992	37.2	65.6	28.4	
Serial Number	Tare Weight	Gross Weight	Net Weight	Last H-Test Date
1 x FM 200 - 600 lb. Cylinder ECS - Bosun's Stores				
288107 32	377.2	750.6	373.4	
Serial Number	Tare Weight	Gross Weight	Net Weight	Last H-Test Date
1 x FM 200 - 600 lb. Cylinder ECS - Engine Control Room				
288091 54	377.4	911	533.6	
Serial Number	Tare Weight	Gross Weight	Net Weight	Last H-Test Date
1 x FM 200 - 600 lb. Cylinder ECS - Steering Gear				
288113 48	378.8	878.4	499.6	
Serial Number	Tare Weight	Gross Weight	Net Weight	Last H-Test Date
1 x FM 200 - 70 lb. Cylinder ECS - Fan Room 189				
288537 50.5 cm	51.2	95.2	44	
Serial Number	Tare Weight	Gross Weight	Net Weight	Last H-Test Date
1 x FM 200 - 70 lb. Cylinder ECS - Helicopter Workshop				
288952	61.2	102.2	41	
Serial Number	Tare Weight	Gross Weight	Net Weight	Last H-Test Date
1 x FM 200 - 70 lb. Cylinder ECS - Heli-Fuel Pump Room				
288564	51.4	101.2	49.8	
Serial Number	Tare Weight	Gross Weight	Net Weight	Last H-Test Date
1 x FM 200 - 70 lb. Cylinder ECS - Hobby Room				
288542	51	97	46	
Serial Number	Tare Weight	Gross Weight	Net Weight	Last H-Test Date
1 x FM 200 - 70 lb. Cylinder ECS - Paint Locker FWD				
288571	51.2	96.8	45.6	
Serial Number	Tare Weight	Gross Weight	Net Weight	Last H-Test Date
1 x FM 200 - 70 lb. Cylinder ECS - Radio Room				
288589	51.4	109.2	57.8	
Serial Number	Tare Weight	Gross Weight	Net Weight	Last H-Test Date
1 x FM 200 - 70 lb. Cylinder ECS - Salvage Diving Room				
288591 54	69.1	109.2	40.1	
Serial Number	Tare Weight	Gross Weight	Net Weight	Last H-Test Date
1 x FM-200 - 1010lb Cylinder ADS - Casing Lower				
288136 60	509.8	1316	806.2	

Serial Number	Tare Weight	Gross Weight	Net Weight	Last H-Test Date
1 x FM-200 - 1010lb Cylinder ADS - Casing Upper				
288139 55.5 cm	510	1279.6	769.6	
Serial Number	Tare Weight	Gross Weight	Net Weight	Last H-Test Date
1 x FM-200 - 225 lb Cylinder ADS - Generator Flat Bilge Port				
268820 67	137.8	343.2	205.4	
Serial Number	Tare Weight	Gross Weight	Net Weight	Last H-Test Date
1 x FM-200 - 225 lb Cylinder ADS - Generator Flat Bilge STBD				
268819 67	137.6	343	205.4	
Serial Number	Tare Weight	Gross Weight	Net Weight	Last H-Test Date
1 x FM-200 - 225 lb Cylinder ADS - Propulsion Motor Rm Bilge Pt				
176928 40	135	275.6	140.6	
Serial Number	Tare Weight	Gross Weight	Net Weight	Last H-Test Date
1 x FM-200 - 225 lb Cylinder ADS - Propulsion Motor Rm STBD				
268821 40	138	279	141	
Serial Number	Tare Weight	Gross Weight	Net Weight	Last H-Test Date
1 x FM-200 - 395 lb Cylinder ADS - Main Engine Rm Bilge Port				
290226 47.5 cm	230.6	527.6	297	
Serial Number	Tare Weight	Gross Weight	Net Weight	Last H-Test Date
1 x FM-200 - 395 lb Cylinder ADS - Main Engine Rm Bilge STBD				
290228 41.5 cm	230.6	526.8	296.2	
Serial Number	Tare Weight	Gross Weight	Net Weight	Last H-Test Date
2 x FM-200 - 675 lb Cylinder ADS - Generator Flat & Heating				
278092 69.5 cm	367.6	1009.4	641.8	
278088 69.5 cm	366.8	1006.6	639.8	
Serial Number	Tare Weight	Gross Weight	Net Weight	Last H-Test Date
2 x FM-200 - 675 lb Cylinder ADS - Main Engine Room Lower				
298833 56	380.4	926.6	546.2	
278094 56	367	914.2	547.2	
Serial Number	Tare Weight	Gross Weight	Net Weight	Last H-Test Date
2 x FM-200 - 675 lb Cylinder ADS - Main Engine Room Upper				
288589 71	380.2	1036.8	656.6	
283550 71	379.6	1034.6	655	
Serial Number	Tare Weight	Gross Weight	Net Weight	Last H-Test Date
2 x FM-200 - 675 lb Cylinder ADS - Propulsion Motor Rm Lower				
283547 54	381.2	921	539.8	
283578 54	383.4	923.2	539.8	

61.2.2 Drawings

61.2.2.1 N/A.

61.2.3 Regulations

61.2.3.1 All work performed and any modifications made, must be compliant with the latest Canada Shipping Act Regulations and in particular to the Marine Machinery Regulations. All work shall meet Transport Canada approved class regulations.

61.2.3 Standards

61.2.3.1 National Fire Protection Association standards.

61.2.4 Quality Assurance Standards

61.2.4.1 As per the Contractors QA Program.

61.3 Technical

61.3.1 The contractor prior to starting any work must notify the Chief Engineer.

61.3.2 Contractor, to supply certified Kidde FSR to service the vessel's FM200 and CO2 system.

61.3.3 The following servicing shall be carried out on all FM-200 Fixed Fire Suppressant Systems.

61.3.4 All levers, valves, remote activations, wires, wire junction boxes, pressure operated sirens and pressure operated switches shall be checked. Delay mechanism shall be checked for proper operation.

61.3.5 Contractor shall inspect all associated fire dampers to check if they have released during the testing of all systems. Contractor shall reset all fire dampers. Any deficiencies shall be rectified through the PWGSC work arising procedures.

61.3.6 Piping shall be disconnected from cylinders and blown through with Nitrogen gas. All multi jet nozzles shall be proven clear.

61.3.7 FM-200 cylinders shall be measured using an approved method to determine the existing quantities of FM-200 agent in each cylinder. The weights shall be recorded and the cylinders tagged and dated. Individual pressures shall be recorded for each cylinder.

61.3.8 The entire system shall be properly reassembled, inspected and proven serviceable.

61.3.9 Remote release stations, fan shut downs as part of system alarm activated, etc., shall be reset and proven operational.

61.3.10 Three (3) copies of weight and inspection records with inspection certificates shall be prepared by the Contractor for the Inspection Authority. One additional copy shall be forwarded to TCMS.

61.3.11 Contractor to supply three copies of test reports and three copies of the test Certifies.

61.3.12 All work carried out in this specification shall be inspected by TCMS Surveyor and Chief Engineer.

61.3.13 All work shall be carried out to the satisfaction of the Chief Engineer.

61.4 Proof of Performance

61.4.1 Inspections

61.4.1.1 The Contractor is responsible for arranging TCMS Inspection.

61.4.1.2 All work carried out in this specification shall be inspected by TCMS Surveyor and Chief Engineer.

61.4.2 Testing/Trials

61.4.2.1 As required by TCMS.

61.4.3 Certification

61.4.3.1 Copy of Kidde Certification is to be given to the Chief Engineer prior to the commencement of work.

65.5 Deliverables

65.5.1 Documentation (Reports/Drawings/Manuals)

65.5.1.1 Two hard copies and 1 electronic copy of all readings and service report shall be given to the Chief Engineer.

65.5.2 Spares

65.5.2.1 N/A.

65.5.3 Training

65.5.3.1 N/A.

62.0 FIRE DETECTION SYSTEMS

62.1 Identification

62.1.1 The intent of this specification is to carry out an annual inspection of the Notifier Fire Detection System and to obtain an inspection certificate to satisfy TCMS requirements.

62.1.2 All work shall be performed by authorized qualified technicians.

62.1.3 All work in this specification shall be inspected by the Chief Engineer and TCMS Surveyor.

62.1.4 Fire Detection system servicing should be completed after deckheads are reinstalled after Asbestos Removals are completed. Contractor is to note that the system is fully functional prior to disturbance and it is the Contractors responsibility to return it to the preexisting condition after completion of work.

62.2 References

62.2.1 Equipment Data

62.2.2 Detector & Module Test-Blank.pdf

62.2.2 Drawings

Drawing Number	Description	Electronic Number
NMF-0001-A.pdf	Navigation and Bridge deck layout	
NMF-0001-B.pdf	Void space Below Wheelhouse	
NMF-0001-C.pdf	Officers Deck	
NMF-0001-D.pdf	Boat Deck, Flight Deck and Foc'sle	
NMF-0001-E.pdf	Upper Deck	
NMF-0001-F.pdf	Main Deck	
NMF-0001-G.pdf	Lower Deck	
NMF-0001-H.pdf	Tank Top	

62.2.3 Regulations

62.2.3.1 All work performed and any modifications made, must be compliant with the latest Canada Shipping Act Regulations and in particular to the Marine Machinery Regulations. All work shall meet Transport Canada approved class regulations.

62.2.4 Standards

62.2.4.1 All work shall be completed in accordance with Canadian Coast Guard's Ship's ISM Fleet Safety and Security Manual. Contractor to supply certified personnel for the performance of work package and must be able to produce certification for the attending TCMS inspector.

62.2.5 Quality Assurance Standards

62.2.5.1 As per the Contractors QA Program.

62.3 Technical

62.3.1 Contractor to test all smoke detectors, heat detectors, fire pulls, mimics (including door switches) and alarms/lights for correct operation as per Notifier recommended test procedures. All defects to be noted and repaired by 1379 action.

62.3.2 The contractor shall supply all materials, equipment, and parts required to perform the specified work unless otherwise stated.

62.3.3 Contractor is responsible for the identification of interference items, their temporary removal, and storage and refitting to vessel.

62.4 Proof of Performance

62.4.1 Inspection

62.4.1.1 All work shall be inspected by the Chief Engineer.

62.4.1.2 All work shall be completed to the satisfaction of the Chief Engineer.

62.4.2 Testing/Trials

62.4.2.1 All testing as per recommended Notifier test procedures. Where non Notifier equipment is used, that manufacturer's instructions to be used.

62.4.2.2 All testing shall be to the satisfaction of TCMS Surveyor.

62.4.2.3 100% of all devices are to be function tested.

62.4.3 Certification

62.4.3.1 All personnel to perform testing to be certified to work on Notifier fire detection systems.

62.5 Deliverables

62.5.1 Documentation (Reports/Drawings/Manuals)

62.5.1.1 The Contractor is to provide 3 hard copies of a written report and 1 electronic pdf format to the Chief Engineer detailing the as found condition, and any corrective action taken or recommended.

62.5.2 Spares

62.5.2.1 N/A.

62.5.3 Training

62.5.3.1 N/A.

63.0 NAVIGATION LIGHTS

63.1 Identification

63.1.1 The intent of this specification shall be to remove the existing PMC navigation lights and control panel and replace with new, Contractor supplied complete set of TCMS or equivalent Class approved LED Glamox/Aqua Signal 65 LED Navigation Lighting fixtures or equivalent complete with compatible control panel as detailed below.

63.2 References

63.2.1 Equipment Data

63.2.1.1 PMC navigation panel and associated lighting

63.2.1.2 This item shall be completed in conjunction with the following:

63.2.1.3 Specification #16 VLE CI #39 Asbestos Remediation

63.2.1.4 Specification #39 & 40 VLE CI #29 Superstructure & Mast Coatings

63.2.2 Drawings

Drawing Number	Description	Electronic Number
32-0880-07	Navigation Lighting Panels	
33-0881-01	Navigation and Floodlight System	
B-20-1578	PMC connection Diagram.pdf	
B-2-1578	PMC External arrangement.pdf	
D-30-1578	PMC external arrangement.pdf	

63.2.3 Regulations

63.2.3.1 Canada Shipping Act, 2001 – Collision Regulations.

63.2.3.2 International Regulations for Preventing Collisions at Sea, 1972 (IMO)

63.2.3.3 International Convention for the Safety of Life at Sea (SOLAS), 1974 (IMO)

63.2.4 Standards

63.2.4.1 Standards for Navigation Lights, Shapes, Sound Signal Appliances and Radar Reflectors – TP1861

63.2.4.2 Ship's Electrical Standards – TP127E

63.2.4.3 IEEE45

63.2.4.4 Fleet Safety and Security Manual (DFO/5737)

63.2.5 Quality Assurance Standards

63.2.5.1 As per the Contractors QA program.

63.3 Technical

63.3.1 The Contractor is to supply of sixteen (16) Glamox/Aqua Signal 65 LED Navigation Lighting fixtures or equivalent as per Table 1.

Table 1

Quantity	Light Description	Lens Colour	Lighting Arc (°)	Visibility (N.M.)
1	Masthead IMO Fwd	White	225	6
1	Masthead IMO Aft	White	225	6
1	Towing Fwd Upper	White	360	3
1	Towing Fwd Lower	White	360	3
1	Port Sidelight	Red	112.5	3
1	Stbd Sidelight	Green	112.5	3
1	Anchor Fwd	White	360	3
1	Anchor Aft	White	360	3
1	Towing Aft	White	360	3
1	Stern Light	White	135	3
1	NUC Stbd Upper	Red	360	3
1	NUC Port Upper	Red	360	3
1	Restricted Stbd	White	360	3
1	Restricted Port	White	360	3
1	NUC Stbd Lower	Red	360	3
1	NUC Port Lower	Red	360	3

63.3.2 All fixtures shall have an ingress protection rating of IP67 or greater.

63.3.3 All fixtures to be constructed of fibre-reinforced polycarbonate material which is matte black in finish.

63.3.4 All fixtures shall contain a main and standby LED lighting element with a combined life expectancy greater than (>) 105,000 hours per individual light with standby light capable of an additional 105,000 hours at 25 degrees Celsius.

63.3.5 All fixtures shall be rated for use on vessels greater than (>) 50 metres in length.

63.3.6 All lighting elements must operate on 115VAC / 60 Hz supply.

63.3.7 To facilitate retrofit of lighting fixtures, new lights to fit existing mounting arrangement and bolt pattern . Current arrangement is a square, four bolt arrangement with 155.5 mm bolt-to-bolt spacing.

63.3.8 Should the proposed fixtures not fit the desired mounting arrangement, Contractor shall submit proposal for adaptive mounting and include cost for supply of such.

63.3.9 The control panel shall be capable of controlling sixteen (16) main and sixteen (16) standby lights.

63.3.10 Supply Control Panel

63.3.11 The Aqua Signal control panel or equivalent shall be capable of controlling sixteen (16) main and sixteen (16) standby lights.

63.3.12 The control panel shall be capable of operating on 115VAC / 60 Hz supply and shall have means for two (2) independent supplies.

63.3.13 The control panel shall have indication lighting showing functionality of the ships lights.

63.3.14 The control panel shall be fitted with audible and visual alarms indicating failure of a power supply or of any of the ships lights.

63.3.15 Installation

63.3.16 Contractor shall supply all equipment, enclosures, ventilation, staging, chain falls, craneage, slings, and shackles necessary to perform the work. All lifting equipment shall be appropriate for the expected duties, and be accompanied by current certification indicating, or be permanently marked as to being, of a safe working load for the expected duties.

63.3.17 The Contractor shall be responsible to arrange for TCMS survey when completing this specification item.

63.3.18 Prior to any steel work taking place, the Contractor shall ensure that the area of work and all equipment, wiring, transits, etc. have been sufficiently protected from any sparks or metal filings.

63.3.19 The Contractor shall be responsible to ensure that all areas have been thoroughly cleaned and free of any debris resulting from the performance of this specification item.

63.3.20 The Contractor shall disconnect the wiring from the sixteen (16) existing light fixtures, dismount the fixtures, and install new Contractor supplied fixtures of the same configuration. Existing wiring is to be reused. The fixtures to be supplied are identified in the following table:

Table 1

Quantity	Light Description	Lens Colour	Lighting Arc (°)	Visibility (N.M.)
1	Masthead IMO Fwd	White	225	6
1	Masthead IMO Aft	White	225	6

1	Towing Fwd Upper	White	360	3
1	Towing Fwd Lower	White	360	3
1	Port Sidelight	Red	112.5	3
1	Stbd Sidelight	Green	112.5	3
1	Anchor Fwd	White	360	3
1	Anchor Aft	White	360	3
1	Towing Aft	White	360	3
1	Stern Light	White	135	3
1	NUC Stbd Upper	Red	360	3
1	NUC Port Upper	Red	360	3
1	Restricted Stbd	White	360	3
1	Restricted Port	White	360	3
1	NUC Stbd Lower	Red	360	3
1	NUC Port Lower	Red	360	3

63.3.21 The Contractor shall mount the new fixtures with new, Contractor supplied, stainless steel bolts complete with washers and self-locking nuts. A total of four (4) bolts are required for the mounting of each fixture.

63.3.22 The Contractor shall remove the current Navigation Lighting Control Panel as fitted in the in the Wheelhouse and replace with the Contractor supplied control panel. The Contractor shall be responsible to fabricate a covering plate for the hole where the existing panel was removed and modify to suit the installation of the new panel. This new panel shall be painted flat black to limit the reflection of any light incident upon the surface.

63.3.22 The Contractor shall mount the new switching unit inside the information console in a in the same location as the existing unit. In the event that the current wiring will not reach the proposed location, the Contractor will be required to terminate the wiring at a Contractor supplied terminal strip, suitable to the purpose, which will be mounted inside the console. Connection to the switching unit will then be made from this point.

63.3.23 The Contractor shall ensure that all wiring has been identified prior to disconnecting from the control panel and shall be reconnected as per the supplied drawings.

63.3.24 Upon final installation, testing shall be carried out as per Section 63.4.2 of this specification item.

63.3.25 The contractor is to meggar all circuits as per accepted TCMS guidelines. Any defects in wiring not a result of the installation shall be covered under PWGSC 1379 action.

63.4 Proof of Performance

63.4.1 Inspection

63.4.1.1 Contractor to arrange for TCMS inspection as required for installation and operational tests as required.

63.4.2 Testing/Trials

63.4.2.1 All light fixtures shall be checked for operation on both the main and standby lamps, for both the main and standby supplies.

63.4.2 The automatic switching of the control panel from main to standby supply shall be verified.

63.4.3 Each fixture shall be tested for operation of the alarm circuit.

63.4.4 All testing shall be completed in the presence of the Chief Engineer or delegate and the attending TCMS Surveyor.

63.4.3 Certification

63.4.3.1 The lighting fixtures and control panel shall be supplied with TCMS or equivalent Class acceptance for use as a navigation lighting appliance.

63.5 Deliverables

63.5.1 Documentation (Reports/Drawings/Manuals)

63.5.1.1 Dimensioned drawings for the fixtures to be supplied with bid showing compatibility with current mounting arrangement .

63.5.1.2 The Contractor shall provide the Chief Engineer with a report of the Contractors work in both electronic and hardcopy formats outlining the details of the inspection and any alterations / repairs made prior to the acceptance of this item.

63.5.1.3 The Contractor shall ensure that all manuals supplied with the navigation lights and control panel are submitted to the Owner prior to the acceptance of this item.

63.5.2 Spares

63.5.2.1 The Contractor shall include a list of all recommended spares for the lighting system for duration of two (2) years and shall include the supply of these items on the total bid submission.

63.5.3 Training

63.5.3.1 The Contractor is to arrange during the performance of the final phases of the refit, once vessel's crew returns, to provide training sufficient to demonstrate the operation of the navigation lighting system to the Chief Officer or delegate.

64.0 FOREDECK COATING RENEWAL

64.1 Identification

64.1.1 The intent of this item is to properly prepare the Fore Deak bulkhead, the windlass bases and the foc'sle deck surface in way of the windlasses, and the Fore Deck bulwarks, stanchions, vents, vent covers, piping, stairs, and other fittings from frame 145 to the bow, and coat them. The total surface area of this item is approximately 200 m2; 15 m2 for the windlass bases and 185 m2 for the remaining surfaces.

64.2 References

64.2.1 Equipment Data

64.2.1.1 Foc'sle Deck,

64.2.2 Drawings

Drawing Number	Description	Electronic Number

64.2.3 Regulations

64.2.3.1 N/A.

64.2.4 Standards

64.2.4.1 Contractor is to follow the recommendations of on-site NACE Inspector and to stay within the guidelines of the coating manufacture recommended application procedures.

64.2.4.2 Application shall be in accordance with the principles of good workmanship as described in SSPC-PA1.

64.2.4 Quality Assurance Standards

64.2.4.1 As per the Contractor's QAS Program.

64.3 Technical

64.3.1 Coast Guard will be retaining the services of an independent NACE consultant to verify that the surface preparation and coating; storage, preparation, and application are as per the specification.

64.3.2 Payment for the consultant will be directly by Coast Guard outside of this contract.

64.3.3 All electrical fixtures and fittings are to be protected against damage during surface preparation and are to be cleaned of any paint upon completion of the work.

64.3.4 The contractor is to quote on Ultra High Pressure Blasting (minimum 40,000 psi) or Grit Blasting of 20% (40 m²) of the area identified by this item to minimum SSPC-SP-10 (Sa 2-1/2) or SSPC-WJ-1 with the edges feathered back to a firm edge. If oxidation occurs between blasting and application of Amerlock 400, the surface must be re-blasted to the specified visual standard prior to application of Amerlock 400. The Contractor is to quote a unit cost per square metre for surface preparation to be adjusted by PWGSC 1379 action.

64.3.5 Prior to the application of any coating, the Contractor is to remove from the vessel all traces of dirt and debris created by the surface preparation. The Contractor shall be responsible for ensuring that all surfaces to be painted are clear and clean, prior to, during and immediately after the application of the coatings.

64.3.6 Contractor is to quote on applying two coats of Contractor supplied Amerlock 400 and two coats of Contractor supplied Matchless 700 White or Matchless 708 Black as required. The first coat, Amerlock 400 Grey, shall be applied at 6-8 mils D.F.T. to cover prepared areas of bare steel (approximately 40 m2). The Contractor is to quote a unit cost per square metre for the application of the two coats to be adjusted by PWGSC 1379 action.

64.3.7 For the windlass bases, the second coat shall be Amerlock 400 Black and shall be applied at 6-8 mils D.F.T. to cover the Amerlock 400 Grey (approximately 10 m2). The first coat of Matchless 708 Black shall be applied to cover the Amerlock 400 Black (approximately 10 m2) and the second coat is to be applied to the total area (approximately 15 m2). The Contractor is to quote a unit cost per square metre for the application of the two coats to be adjusted by PWGSC 1379 action.

64.3.8 For all other surfaces, the second coat shall be Amerlock 400 White and shall be applied at 6-8 mils D.F.T. to cover the Amerlock 400 Grey (approximately 30 m2). The first coat of Matchless 700 White shall be applied to cover the Amerlock 400 White (approximately 30 m2) and the second coat is to be applied to the total area (approximately 185 m2).

64.3.9 The Contractor is to quote a unit cost per square metre for the application of the two coats of Amerlock 400 and the first coat of Matchless 700 White or Matchless 708 Black as required.

64.3.10 All signs and tags affixed to structures to be coated must be protected so that paint does not get on them.

64.4 Proof of Performance

64.4.1 Inspection

64.4.1.1 In consultation with the NACE Inspector, the Contractor shall develop hold points to allow for random sample readings to verify surface preparation, environmental conditions and coating specification goals have been met.

64.4.1.2 NACE inspector will be required to inspect the preparation of and each of the applications of each component of the coating system. It is the contractors responsibility to arrange for the NACE inspector to be present at the required times to inspect the preparation and applications. Coating at each stage will also be to the satisfaction of the chief engineer or designate.

64.4.2 Testing/Trials

64.4.2.1 The Contractor shall test surface cleanliness, surface preparation profile, environmental conditions and DFT at each stage of this specification.

64.4.3 Certification

64.4.3.1 Surface preparation and coating application operators are to be certified to ASTM Standards D4227 and 4228 or latest equivalent.

64.4 Deliverables

64.4.1 Documentation (Reports/Drawings/Manuals)

64.4.4.1 The contractor shall supply copies of all Paint coating MSDS and technical data sheets.

64.4.4.2 The Contractor shall provide to the Chief Engineer and NACE inspector, before the coating is applied, the following information sheets regarding the coating used:

- Working procedures sheets
- Product data sheets
- Material Safety Data Sheets

64.4.4.3 The Contractor shall record all readings taken during the preparation and application processes. The Contractor shall provide the Chief Engineer with a report of the Contractors work in both electronic and hardcopy formats outlining the details of the work prior to the acceptance of this item.

63.4.4 Spares

64.4.4.1 N/A.

64.4.5 Training

64.4.5.1 N/A.

65.0 FPE VACUMATIC CONTACTORS

65.1 Identification

65.1.1 The intent of this specification is to remove the 3 Schneider/FPE VC5 vacuum contactors for servicing and recertification.

65.2 References

65.2.1 Equipment Data

65.2.1.1 Schneider/FPE VC-5 Vacumatic motor controllers.

- Port Vital MCC feeder (Medium voltage switchboard, MCR)P-4003
- Stbd Vital MCC feeder (Medium voltage switchboard, MCR) P-4004
- Ship Service Transformer (Medium voltage switchboard, MCR) P-4005

65.2.1.2 Contactor bus voltage 4160 Volt, 3 phase, 60 HZ . 400 amp. Control voltage is 120volt AC through an integrated step down transformer. All contactors identical with the exception of bus fusing at top of contactors.

65.2.2 Drawings

Drawing Number	Description	Electronic Number
W5339C2141-2	VACUUM CONTACTOR-CONTROL SCHEMATIC	
W5339C2141-2A	VACUUM CONTACTOR-CONTROL SCHEMATIC	

65.2.3 Regulations

65.2.3.1 All work performed and any modifications made, must be compliant with the latest Canada Shipping Act Regulations and in particular to the Marine Machinery Regulations. All work shall meet Transport Canada approved class regulations.

65.2.4 Standards

65.2.4.1 TP 127E Transport Canada, Marine Safety, Ship Electrical Standards, Current Edition.

65.2.4.2 IEEE Std 45Recommended Practice for Electrical Installations on board ships.

65.2.5 Quality Assurance Standards

65.2.5.1 All inspections and repairs to the satisfaction of the Chief Engineer and attending TCMS inspector.

65.3 Technical

65.3.1 The contractor will engage the services of a Schneider/FPE FSR to service the 3 FPE Vacumatic vacuum contactors located in the main control room.

65.3.2 The contractor will remove the 3 contactors from the vessel, crate and ship to the authorized service facility. The contractor is responsible for fabrication of any boxes and shipping and any damage during shipment. The approximate value of each contactor is $30,000.

65.3.3 The contractor will be allowed to perform the service on the vessel if the testing and servicing can be done to the satisfaction of the FSR and chief engineer. Due to the size of Hi-Pot tester, this may not be possible. The bus voltage for the contactors is 4160Volt.

65.3.4 Schneider/FPE FSR is to perform the follow service as a minimum as outlined in the included operational service manual:

- General inspection for damage
- Operational test with voltage applied
- Check resistance of all contacts
- Hi-Pot test as outlined in manual
- Lubrication of all moving parts
- General cleaning
- Adjustment checks as outlined in manual
- Door interlock check
- Functional test before and after service
- Clean all contacts

65.4 Proof of Performance

65.4.1 Inspections

65.4.1.1 All installations will be to the satisfaction of the Chief Engineer and attending TCMS inspector.

65.4.2 Testing/Trials

65.4.2.1 Contractor is to prove contactors are fully functional to the satisfaction of the Chief Engineer and TCMS Inspector.

65.4.3 Certification

65.4.3.1 Contractor to provide proof of Schneider/FPE certification as well as current calibration certificates for any test gear used during servicing.
(IE: Hi-Pot tester, Micro-Ohm meter, meggar).

65.5 Deliverables

65.5.1 Documentation (Reports/Drawings/Manuals)

65.5.1.1 The Contactor is to deliver 3 hard copies and 1 electronic pdf copy of the following:

- Current calibration certificates for any test gear used by FSR.
- Test report of contactors including any recommendations.

65.5.2 Spares

65.5.2.1 N/A.

65.5.3 Training

65.5.4 N/A.

66.0 GALLEY RANGEHOOD AND EXHAUST TRUNK CLEANING

66.1 Identification

66.1.1 The intent of this item is to open up, clean, disinfect and close up in good order the Galley range hood and exhaust fan trunking.

66.2 References

66.2.1 Equipment Data

66.2.1.1 Galley range hood (Gaylord model BDL-DS).

66.2.2 Drawings

Drawing Number	Description	Electronic Number

66.2.3 Regulations

66.2.3.1 All work performed and any modifications made, must be compliant with the latest Canada Shipping Act Regulations and in particular to the Marine Machinery Regulations. All work shall meet Transport Canada approved class regulations.

66.2.3 Standards

66.2.3.1 TP 127E Transport Canada, Marine Safety, Ship Electrical Standards, Current Edition.

66.2.3.2 IEEE Std 45-2014 Recommended Practice for Electrical Installations on board ships.

66.2.4 Quality Assurance Standards

66.2.4.1 As per the Contractors QA Program.

66.3 Technical

66.3.1 The Galley range hood shall be opened up for thorough cleaning and degreasing. The existing exhaust fan trunking run from the Galley Range hood to the Exhaust fan outlet at Upper Deck, port side Frame 30, shall be internally degreased and cleaned.

66.3.2 The contractor shall co-ordinate the work with the Chief Engineer to minimize disruptions to ship's routine. Contractor to include in bid, his and any sub-

contractor's cost for premium time for evenings, weekends and/or holidays worked.

66.3.3 With the ship's Electrical Officer the contractor is to ensure the Lockout/Tagout is in place. The contractor is to supply his/her own locks and tags but complete the vessel's Lockout/Tagout procedure.

66.3.4 All chemicals used in cleaning the range hood and galley exhaust fan trunking shall be non-toxic and safe for use in food preparation and handling areas. Contractor to provide 2 copies of product Material Safety data Sheet information corresponding to the cleaning agents which will be used in the cleaning process.

66.3.5 Prior to the commencement of work, qualified personnel shall release all range hood mechanical and electrical components, including suppression system piping, controls and lighting. All fittings liable to interfere with cleaning of the range hood are to be temporarily relocated and protected.

66.3.6 The range hood filter screens to be removed and steam cleaned. All range hood drains and grease traps shall be proven clear. Fire dampers to be cleaned and demonstrated in good working order.

66.3.7 The contractor shall remove all debris and soiled materials from the vessel and dispose ashore daily.

66.3.8 Upon completion of work, the contractor shall return all disturbed range hood components as per original. Range hood wash-down system shall be tested and proven operational.

66.3.9 The contractor shall access the exhaust trunking by removing the following:
in deck cross alleyway and Galley ceiling panels in way of the trunking run.
Main deck flanged exhaust trunking fire damper. Unit flanged and bolted in situ.
Inline exhaust fan, located Upper Deck Fan Room. Unit flanged and bolted in situ.
Two- 12"x12" sheet metal trunking access panels Upper Deck fan room. Screwed in situ.
Port side Upper Deck exhaust trunking outlet louver. Bolted in situ.

66.3.10 The Galley Exhaust Fan to be removed to allow for cleaning of trunking on either side. Fan and motor units to be completely degreased.

66.3.11 The exhaust trunking outlet louver shall be removed. Fine mesh screen to be removed and cleaned. Remainder of louver, including cover, to be sandblasted to white metal and painted with two coats of primer and one coat of white paint. Hinge pins to be freed up and greased. Louver door rubber seal to be removed during sandblasting and painting, then reinstalled with proper adhesive. New gasket to be supplied when louver bolted in place.

66.3.12 All disturbed exhaust trunking access points shall be reinstalled using fire rated materials.

66.3.13 Prior to reinstallation of the main deck ceiling panels, the fire damper shall be tested to the satisfaction of the Chief Engineer for correct operation.

66.4 Proof of Performance

66.4.1 Inspection

66.4.1.1 Upon completion of work, the Air Handling Units shall be run up and ductwork proven free and clear.

66.4.1.2 All work to be completed to the satisfaction of the Chief Engineer.

66.4.2 Testing/Trials

66.4.2.1 N/A.

66.4.3 Certification

66.4.3.1 N/A.

66.5 Deliverables

66.5.1 Documentation (Reports/Drawings/Manuals)

66.5.1.1 The Contractor is to provide a Service Report including at a minimum; the as found condition, work performed, and any parts used. Two hard copies and 1 electronic copy will be given to the Chief Engineer.

66.5.2 Spares

66.5.2.1 N/A.

66.5.3 Training

66.5.3.1 N/A.

67.0 HELICOPTER FUEL SYSTEM SERVICING

67.1 Identification

67.1.1 The intent of this item is to carry out annual inspection, maintenance and certification of the ship's Helicopter Refueling system. The Contractor shall supply the services of a qualified service representative to complete the work in this specification.

67.2 References

67.2.1 Equipment Data

67.2.1.1 Tank	Capacity (m3)	Location	Field #
Helo Fuel Tank Cofferdam	132	Fr 4-12	3L007
Helo Fuel Tank	27	Fr 5-11	3L006

67.2.1.2 The control for the aviation fuel quick closing valves is located inboard of the dispensing unit.

67.2.1.3 Contractor is responsible for the identification of interference items, their temporary removal, storage and refitting to vessel.

67.2.2 Drawings

Drawing Number	Description	Electronic Number
	Flow Diagram – Helicopter Fuelling Package (New-Mar Oil Services)	

67.2.3 Regulations

67.2.3.1 All work performed and any modifications made, must be compliant with the latest Canada Shipping Act Regulations and in particular to the Marine Machinery Regulations. All work shall meet Transport Canada approved class regulations.

67.2.4 Standards

67.2.4.1 Helicopter Fuel Standard – Canada CGSB 3.23-02

67.2.5 Quality Assurance Standards

67.2.5.1 As per the Contractors Quality Assurance Program.

67.3 Technical

67.3.1 Helicopter fuel tank cofferdam is to be opened to allow required work. The manhole cover is to be removed and the space certified gas free for entry. The gas free certificate is to be maintained for the duration of necessary work.

67.3.2 The contractor is to clean the cofferdam of any debris and water.

67.3.3 Upon completion of work the cofferdam area is to subject to a final inspection by Owner's representative and then immediately closed up using new packing on the installed manhole cover.

67.3.4 Contractor shall remove the following safety valves from tank/system and transport them to a certified testing facility:
1 x 1.5" vacuum relief valve (15017)
1 x 1.5" 'UNIACT' pressure relief valve (15009SP)
1 x 8" fire engulfment valve (6R8/411422/C)
Blanks are to be fitted to exposed flanges to prevent ingress of foreign materials into tank. Silica Gel is to be fitted to tank to absorb any moisture from ingress of air into the tank. Removed safety valves shall be thoroughly inspected, cleaned as necessary and certified for proper operation. A condition assessment will be carried out at that time. Upon completion of inspection all valves shall be boxed up, tested, reset and recertified as indicated. Contractor shall return valves to the vessel and refit them in their original locations in good order.

67.3.5 The Contractor shall supply and install new gaskets on each of the 1.5" vacuum relief valve and 1.5" pressure relief valve and 8" flame engulfment valve. The gasket material used is to be intended by the manufacturer for use with Jet A helicopter fuel. The Contractor must supply proof that the gasket material is so intended.

67.3.6 Contractor shall make arrangements to have the 1 ½:" diameter helicopter fueling hose removed from the ship and shipped to a recognized test facility test for annual certification, This certification will require the hose be pressure tested to 150 psi.. A contractor supplied stamped metal tag showing test dates and pressures shall be affixed to the hose. Contractor shall return the hose to the ship and re-install it on the hose reel on the Stbd side flight deck upon completion of testing. A test certificate shall be issued to Chief Engineer. Nozzle and all associated fittings to be inspected.

67.3.7 Dispensing meter calibration is to be verified. The meter is a positive displacement flow-meter, Bopp & Reuther 0150M5F5, calibrated for use with JET A1.

67.3.8 The Contractor is to verify the electrical continuity of all the piping associated with the system.

67.3.9 Associated Armstrong gas monitors (AMC 2011) in the following areas are to be tested and certified in good working condition by a recognized Armstrong service representative.
Pump Room
Cofferdam Port

Cofferdam Starboard
Emergency Resupply Hold

67.3.10 Monitor elements to be replaced. (Owner supply).

67.3.11 Filter/water Separator expendable cartridges to be replaced. (Owner supply).
67.3.12 Silica Gel in tank vent to be renewed (Owner supply).

67.3.13 A minimum 2.5 litre sample is to be taken from the helicopter fuel pumped from the vessel into the holding facilities for laboratory analysis. This testing and re-certification is to be completed prior to the fuel being returned to the vessel. Laboratory testing of the fuel is to include but not necessarily limited to:
1. Appearance / Colour
2. Water / Contaminants
3. Flash Point
4. Freezing Point
5. Distillation
6. Density
7. Copper
8. Corrosion
9. Existent of Gum
10. Water Reaction

67.3.14 Contractor to dispose of used cartridges, elements and the used Silica Gel ashore as per Provincial regulations.

67.3.15 Contractor to supply all materials unless specified otherwise.

67.4 Proof of Performance

67.4.1 Inspection

67.4.1.1 The Contractor is to be responsible for all inspections and is to consult with TCMS, prior to commencement of work, to determine an inspection schedule; at each inspection point, the Contractor is to advise the Owner's representative, in advance, to allow his/her attendance.

67.4.1.2 All work to be completed to the satisfaction of the Chief Engineer.

67.4.2 Testing/Trials

67.4.2.1 Upon completion of work, system is to be run up and proven fully operational to satisfaction of the Chief Engineer or delegate.

67.4.3 Certification

67.4.3.1 Service personnel are to be fully certified to service fuel equipment.

67.5 Deliverables

67.5.1 Documentation (Reports/Drawings/Manuals)

67.5.1.1 The Contractor is to provide a Service Report including at a minimum; the as found condition, work performed, and any parts used. Two hard copies and one electronic copy will be given to the Chief Engineer.

67.5.1.2 Gas free certificates for subject spaces.

67.5.1.3 Testing reports and certificates for fuel, fuel hose, valves, gas monitors, and gauges.

67.5.2 Spares

67.4.2.1 N/A.

67.5.3 Training

67.5.3.1 N/A.

68.0 INVERTER REPLACEMENT

68.1 Identification

68.1.1 The intent of this spec is to replace the obsolete Abacus controls inverter with a new contractor supplied unit.

68.2 References

68.2.1 Equipment Data

68.2.1.1

Manufacturer	Abacus Controls Inc Somerville, N.J. USA
Model number	419-4-125M1
Serial number	13035-01
Input	125VDC +/- 20% and 115VAC, 60Hz, 3PH Delta
Output	115VAC, 60Hz, 3PH Delta 10 KVA

68.2.2 Drawings

Drawing Number	Description	Electronic Number
13-0074-01	General Arrangement Officers Deck.TIF	

68.2.3 Regulations

68.2.3.1 All work performed and any modifications made, must be compliant with the latest Canada Shipping Act Regulations and in particular to the Marine Machinery Regulations. All work shall meet Transport Canada approved class regulations.

68.2.4 Standards

68.2.4.1 TP 127E Transport Canada, Marine Safety, Ship Electrical Standards, Current Edition.

68.2.4.2 IEEE Std 45-2014 Recommended Practice for Electrical Installations on board ships.

68.2.5 Quality Assurance Standards

68.2.5.1 As per the Contractors QA Program.

68.3 Technical

68.3.1 The current 3 phase inverter located in the Inverter room located on the Officers deck is to be replaced with a new contractor supplied unit.

68.3.2 The current mounting arrangement of the old inverter is as follows:

- 30”W x 36”H x 17”D (3” Space Aft of unit for air circulation)
- Four support legs with a ¼” plate measures 24” from the deck.

- There are four resilient mounts for vibration suppression between the ¼" plate and the Inverter Casing. This measurement is 2.5"
- Total measurement from the deck to the top of the Inverter cabinet is 63"

68.3.3 The existing Cabling is as follows:

From Emerg. Swbd. To Charger EP511 3 Cond #6 AWG
From Batteries to Disconnect Switch EP111-DC2 2 Cond #2 AWG
From Disconnect Switch to Charger Output EP111-DC3 2 Cond #2 AWG
From Charger Output to Inverter Input EP111-DC1 2 Cond #2 AWG

AC Input from Emerg. Swbd EP107 3 Cond #4 AWG
AC Output from Inverter to TEP-101 3 Cond #4 AWG

Engine Room Console to Inverter 8 Cond #14 AWG
Alarm System Inverter Fault 2 Cond #14 AWG

68.3.4 The External Inverter Bypass switch is as follows:

- Inverter By-Pass Switch -Break Before Make Disconnect Switch
- Manufacturer HE Cat # SA5736DU Rating - 3 Pole 60 Amp 600 V

68.3.5 The new inverter will be capable of 24/7 operation while on ships propulsion. Currently to maintain clean power to sensitive ships electronics, the inverter is in Inverter mode by automatic disconnection of the incoming 120Volt AC feed by way of an external contactor. The battery bank is continually charged to maintain both the battery bank and inverter operation.

68.3.6 The new Inverter will be capable of operating in normal or bypass mode and not be affected by power bumps or large load changes. All tripping and safeties on the new inverter will have user adjustable time delays and set point to ensure false transfers.

68.3.7 The new inverter will have the following minimum specification:

68.3.8 Output Power: 10KVA / 8KW @ 0.8 PF

68.3.9 Nominal bypass voltage: 120VAC,3 Phase, 60Hz, delta ±10%

68.3.10 Nominal output voltage: 120VAC, 3P, 60Hz, delta ± 1%

68.3.11 Nominal DC bus voltage: 125 VDC (105V-147V)

68.3.12 Inverter input DC Circuit Breaker: 125Vdc-100A-10kA-2Pole

68.3.13 Inverter o/p AC Circuit Breaker: 120V-100A-10kA-3Pole

68.3.14 Bypass line input AC Circuit Breaker: 120V-100A-10kA-3Pole

68.3.15 All automatic shutdowns (inverter fluctuations, voltage current/temperature) with the exception of instantaneous and long-time overcurrent will have the ability to be

disabled by user to prevent inadvertent trips. The automatic shutdowns will result in alarm condition only to give ships staff time to bypass unit

68.3.16 Solid state static switch for less than 4ms transfer time.

68.3.17 Operating temperature range: -40ºC to 85ºC.

68.3.18 Operating humidity: Up to 95%.

68.3.19 All terminal blocks and cable entry at lower side of cabinet.

68.3.20 Output ground leakage alarm and light on each phase.

68.3.21 Manual bypass switch.

68.3.22 The new inverter will be class certified as recognized by TCMS under the DSIP program.

68.3.23 The new inverter will have an integrated drip tray.

68.3.24 RS232 or USB communication port for diagnostics including full copy of software for troubleshooting.

68.3.25 The new inverter will have an LCD display to access all controls, status and alarms as detailed below

- Phase-phase o/p voltage
- Phase-neutral o/p voltage
- O/p current
- Inside temperature
- Load percentage
- Battery Input Voltage
- Battery Link DC voltage
- DC current Battery
- Battery Current
- Phase-phase o/p voltage
- Link DC voltage
- Link DC current
- Frequency
- Bypass Voltage
- Bypass Frequency

68.3.26 The inverter will have at minimum 9 external connections consisting of N/O , N/C contacts that are user customizable for different alarm points as per the original unit. This will include the following. The ships Electrical Officer will determine which alarms are to be connected in conjunction with the inverter FSR All alarms will have adjustable set points and time delay.

- Common alarm fault relay for all faults
- High temperature
- Bypass line ON

- Inverter started
- De-saturation
- Load on bypass line
- Low DC volts
- Load on inverter
- Greater than 125% load

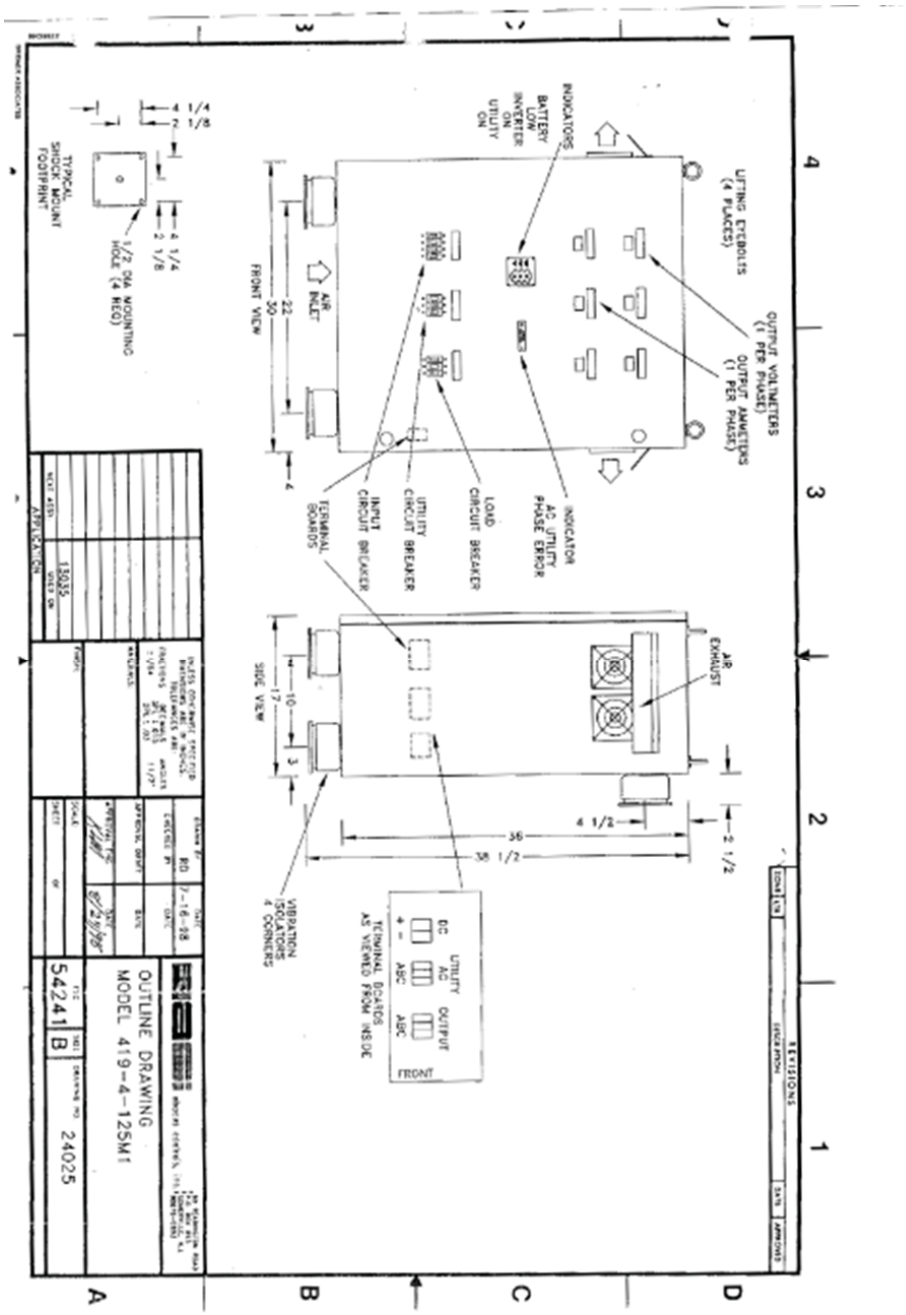

Inverter Dimensions

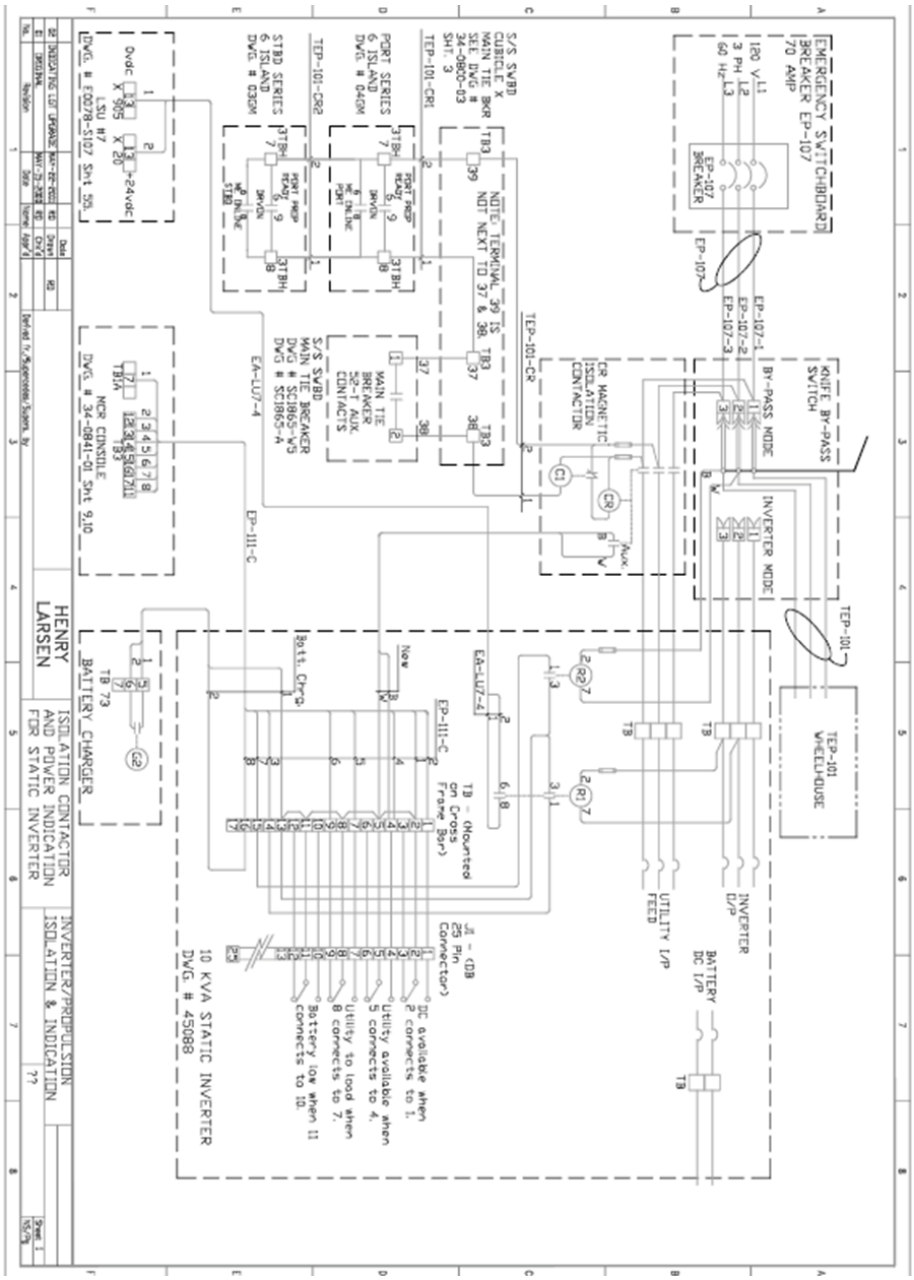
EMERGENCY SWITCHBOARD BREAKER EP-107 70 AMP
120 V
3 PH
60 Hz
L1
L2
L3
EP-107 BREAKER
EP-107
EP-107-1
EP-107-2
EP-107-3
BY-PASS MODE
KNIFE BY-PASS SWITCH
INVERTER MODE
TEP-101
TEP-101 WHELHOUSE
S/S SVBD CUBICLE X MAIN TIE BKR SEE DWG # 34-0800-03 SHT. 3
TEP-101-CR1
NOTE: TERMINAL 39 IS NOT NEXT TO 37 & 38
TB3
39
37
38
PORT SERIES 6 ISLAND DWG. # 040GM
TEP-101-CR2
STBD SERIES 6 ISLAND DWG. # 030GM
PORT PROP READY
DRIVEN
PORT
STBD
STBD PROP READY
TEP-101-CR
CR MAGNETIC ISOLATION CONTACTOR
C1
CR
Aux
S/S SVBD MAIN TIE BREAKER DWG # SC1865-W5 DWG # SC1865-A
MAIN TIE BREAKER 52-T AUX CONTACTS
EA-LU7-4
EP-111-C
R2
R1
TB
UTILITY FEED
INVERTER I/P
BATTERY DC I/P
TB - (Mounted on Cross Frame Bar)
J1 - (DB 25 Pin Connector)
New
Batt. Chrg
DC available when 2 connects to 1.
Utility available when 5 connects to 4.
Utility to load when 8 connects to 7.
Battery low when 11 connects to 10.
10 KVA STATIC INVERTER DWG. # 45088
Dvdc
X 905
X 20
+24vdc
LSU #7
DWG. # F0278-S107 Sht 5,6
MCR CONSOLE
DWG. # 34-0841-01 Sht 9,10
BATTERY CHARGER
TB 73
G2
HENRY LARSEN
ISOLATION CONTACTOR AND POWER INDICATION FOR STATIC INVERTER
INVERTER/PROPULSION ISOLATION & INDICATION
??

68.3.26 The inverter will have a minimum of 4 sets of dry N/C and N/O contacts for connection to the vessels alarm and monitoring system.

68.3.27 The contractor will remove the inverter after it has been isolated and locked out from its source and from the individual battery bank located in the battery locker.

68.3.28 The Contractor will mount the new inverter in the space allotted for the old inverter ensuring that proper space is allowed for the opening of the cabinet for servicing.

68.3.29 The Contractor is responsible for the identification of all interference items, their removal, safe storage and replacement after installation of the inverter.

68.3.30 The Contractor is responsible for the transportation and storage of the new inverter to the new as identified location.

68.3.31 The old Inverter shall be returned to CCG for disposal.

68.3.32 The Contractor is responsible for all welding/cutting, insulation removal and replacement as a result of new mounting arrangements if the new inverter does not fit existing mounting arrangement. The contractor is to follow the recommended manufactures instruction for mounting. All disturbed steel will receive a minimum of 2 coats of marine grade prior to installation.

68.3.33 The Contractor is responsible for disconnecting all wiring and returning all wiring to good order after the new inverter is put in place. Any cabling damaged during the removals or installations will be the contractor's responsibility.

68.3.34 The intent is to re-use the existing cabling. In the event that cabling is not long enough due to placement of terminal strips/connection points, cables will be replaced if practical to the nearest junction box in the same compartment. Cables will be of identical construction and ratings as per the original cabling.

68.3.35 Where cabling is not of sufficient length and no connection/terminal boxes exist in the space, a suitable junction box may be placed adjacent to the new inverter. New cables will be of identical construction and ratings as per the original cabling.

68.3.36 All cables as they enter or exit panels or junction boxes if not already existent will have non-corrosive metal identification tags affixed detailing cable designations as per existing scheme.

68.3.37 A suggested supplier for the above inverter equipment that meets all of the requirements as identified above is:
Stephen Monk
Western Sales Manager
Primax Technologies Inc.
65 Hymus Blvd., Pointe Claire, Quebec, Canada, H9R 1E2
Tel: (514) 459-9990 (ext: 2024) Fax : (514) 459-9991 Cell : (514) 945-3630
Email: smonk@primax-e.com Web: www.primax-e.com

68.4 Proof of Performance

68.4.1 Inspection

68.4.1.1 All installations will be to the satisfaction of the Chief Engineer and attending TCMS inspector.

68.4.2 Testing/Trials

68.4.2.1 Contractor is to supply the services of OEM FSR for the inverter to correctly configure it for correct operation. This will include all modes of operation. Ships hotel generators and on ships propulsion bus while maneuvering.

68.4.3 Certification

68.4.3.1 Class Approval.

68.5 Deliverables

68.5.1 Documentation (Reports/Drawings/Manuals)

68.5.1.1 The contactor is to deliver 3 hard copies and 1 electronic pdf copy of the following:

68.5.1.2 Inverter operation and maintenance manual.
68.5.1.3 Full spare parts list with contact info.
68.5.1.4 All manufactures test certificates as well as class certificates.

68.5.1.2 Contractor is to supply complete listing of spares with contact info for ordering spares.

68.5.2 Spares

68.5.2.1 Contractor is to supply 1 full year of recommended spares as identified by the inverter supplier. Parts shall come complete with part numbers, lead times and cost.

68.5.3 Training

68.5.3.1 Contractor is to supply the services of OEM FSR for the inverter to correctly maintain and operate it. This will include all modes of operation, trouble shooting, and frontline maintenance. The Contractor shall allow for 4 hours training.

69.0 MCR FLOORING REPAIR

69.1 Identification

69.1.1 The intent of this specification shall be to remove the damaged sections of the existing A60 rated floating floor in the Motor Control Room, prepare the metal decking below, and apply Dex O Tex subfloor to current A60 regulations on top, level and flush with remaining flooring.

69.2 References

69.2.1 Equipment Data

69.2.1.1 N/A.

69.2.2 Drawings

Drawing Number	Description	Electronic Number
15-0252	Deck Covering Plan	
15-0401-01	Joiner and Insulation Details Sheet 30 details C	
15-0401-02	Insulation Plan concerning the General Notes on the Fire Insulation	
15-0401-03	Insulation Plan	

69.2.3 Regulations

69.2.3.1 All work performed and any modifications made, must be compliant with the latest Canada Shipping Act Regulations and in particular to the Marine Machinery Regulations. All work shall meet Transport Canada approved class regulations.

69.2.3.2 All products and procedures used must be authorized by TC and subjected to the inspection and approval of the attending Transport Canada Marine Surveyor. If there are any questions or dispute with the owner, the Contractor shall involve TC to make the final determination.

69.2.4 Standards

69.2.4.1 Once repaired, the new decking shall be firm and flush with the existing material on the deck in the MCR.

69.2.4.2 The insulation used on the steel deck must be approved by Transport Canada Marine Safety and maintain the current rating of A60 in regards to preventing the spread of fire.

69.2.5 Quality Assurance Standards

69.2.5.1 As per the Contractors QA Program.

69.3 Technical

69.3.1 The contractor shall supply all materials, equipment, and parts required to perform the specified work unless otherwise stated.

69.3.2 The contractor shall protect all sensitive and electrical equipment in the MCR prior to disturbing the damaged flooring by covering with drop cloths and securing in a manner where by it doesn't fall off.

69.3.3 The contractor shall remove the rubber matting and store in a safe place to be re-installed once flooring has cured.

69.3.4 The contractor shall remove the existing damaged floating flooring on the starboard side of the desk, forward to the control console and then port to the port console. The starboard side measures 6'x6', and the front of the desk measures 12'x4'. The contractor shall quote on 84 square feet of repair.

69.3.5 The contractor shall cut existing panels in a location to where sound decking is observed. This can be determined in conjunction with the Chief Engineer. The contractor shall provide a cost per square foot to be adjusted by 1379.

69.3.6 The contractor shall remove all damaged panels and transport to garbage bins ashore.

69.3.7 Once the demolition is complete, the contractor shall clean the steel decking underneath and apply the following Dex O tex products in sequence.

1. Dex O Tex Amerlock 2 Epoxy applied to bare steel
2. Dex O Tex Decklite A60 Fire rated underlayment, equivalent to A60 minimum
3. Dex O Tex VLW Epoxy Underlayment top coat to desired height of existing floor

69.3.8 The total thickness of the insulation and Dex O Tex shall be at a height flush to existing coatings and shall be considered to be around 77 mm for bidding purposes. All Dex O Tex manufactures application instructions will be followed with a copy of relevant instructions and MSDS sheets given to the chief engineer.

69.3.9 Fairing and transition from the new to the old decking must be neat and even, and no abrupt profiles.

69.3.10 The contractor shall re-install the rubber matting once all is cured.

69.4 Proof of Performance

69.4.1 Inspections

69.4.1.1 The Contractor shall notify the Chief Engineer or his delegate after each stage of the refurbishment process for inspection purposes.

69.4.1.2 All work to be to the satisfaction of the Chief Engineer.

69.4.2 Testing/Trials

69.4.2.1 N/A.

69.4.3 Certification

69.4.3.1 The Contractor shall provide insulation product fire rating or TCMS/Class certification.

69.5 Deliverables

69.5.1 Documentation (Reports/Drawings/Manuals)

69.5.1.1 The contractor shall supply the owner with brochures and MSDS sheets for the products used to repair the flooring.

69.5.2 Spares

69.5.2.1 N/A.

69.5.3 Training

69.5.3.1 N/A.

70.0 MEGGER TESTING

70.1 Identification

70.1.1 The intent of this specification shall be for the Contractor to test the insulation resistance of all the electrical distribution systems and circuits onboard, to satisfy the annual requirements of TCMS Surveyor. Care is to be taken not to test circuits while electronics (including voltage regulators), which may be damaged by high voltages, are connected. The contractor shall ensure all electronics are unplugged (TV's, DVD's, radios etc.) in cabins, lounges and other common areas before conducting insulation testing.

70.2 References

70.2.1 Equipment Data

70.2.1.1 Henry Larsen Meggar blank listing.pdf is contained in the Drawing package which contains listing of all the vessels circuits.

70.2.2 Drawings

Drawing Number	Description	Electronic Number

70.2.3 Regulations

70.2.3.1 All work performed and any modifications made, must be compliant with the latest Canada Shipping Act Regulations and in particular to the Marine Machinery Regulations. All work shall meet Transport Canada approved class regulations.

70.2.4 Standards

70.2.4.1 All work shall be completed in accordance with Canadian Coast Guard's Ship's ISM Fleet Safety and Security Manual. Contractor to supply certified personnel for the performance of work package and must be able to produce certification for the attending TCMS inspector.

70.2.4.2 TP127E Transport Canada Electrical Standards.

70.2.5 Quality Assurance Standards

70.2.5.1 All test equipment used to have current calibration certificates.

70.3 Technical

70.3.1 The Following Circuits shall be tested. 1000 VDC for alternators (Current transformers to be shorted for protection and field disconnected from electronic regulators) and 500 VDC for all remaining circuits listed.

70.3.2 The Contractor shall megger test all essential and non-essential wiring circuits of vessel's power distribution system, and test all connections of ground cable as outlined in Henry Larsen Meggar blank listing.pdf. A copy of the excel spread sheet will be given to the Contractor to record test results in the supplied Drawings & Manuals Folder. For estimation purposes a total of 61 distribution panels with approximately 1050 circuits. The contractor is to include also 6 generators, 2 propulsion motors and 4 propulsion transformers.

70.3.3 Contractor is to take special care with the meggaring of propulsion generators, transformers and motors. Testing routine to be vetted through Senior Electrical Officer or designate.

70.3.4 The Contractor shall notify the Technical Authority of deficiencies and conduct repairs as agreed which will be covered with 1379 action.

70.3.5 Contractor to note any differences in panel listing and official meggar listing.

70.3.6 All equipment opened shall be properly reconnected and tightly closed.

70.3.7 The contractor shall ensure equipment is safe to de-energize and re-energize after work is completed.

70.3.8 List of panels attached in Drawing Attachment " Henry Larsen Meggar blank listing.pdf".

70.3.9 Contractor is to megger all electrical systems found onboard the vessel. These readings are to be recorded and three (3) hard copies and one electronic pdf copy to be forwarded to the chief engineer. Any Grounds or shorts found in any circuit are to be identified and appropriate action taken to correct. Minimum acceptable value is 100,000 ohms.

70.3.10 Contractor is responsible for the identification of interference items, their temporary removal, storage and refitting to vessel.

70.4 Proof of Performance

70.4.1 Inspections

70.4.1.1 All work shall be inspected by the Chief Engineer or designate.

70.4.1.2 All work shall be completed to the satisfaction of the Chief Engineer.

70.4.2 Testing/Trials

70.4.2.1 All testing as per recommended TCMS recommended practices and to the satisfaction of the Chief Engineer or designate.

70.4.3 Certification

70.4.3.1 All test equipment used to have current calibration certificates. The Contractor shall supply copies of test equipment certification.

70.5 Deliverables

70.5.1 Documentation (Reports/Drawings/Manuals)

70.5.1.1 The Contractor is to provide 3 hard copies of a written report and 1 electronic pdf format to the Chief Engineer detailing as a minimum the as found condition, and any corrective action taken or recommended.

70.5.2 Spares

70.5.2.1 N/A.

70.5.3 Training

70.5.3.1 N/A.

71.0 PORTABLE FIRE EXTINGUISHERS

71.1 Identification

71.1.1 The intent of this specification is to carry out the annual safety inspection of all portable fire extinguishers.

71.2 References

71.2.1 Equipment Data

71.2.1.1 Listing of Extinguishers.

Bridge Deck									
	#	Type		Location	Serial #	Hydro Due	6 Year Due	Man. Date	Comments
	1	5 lb Dry Chem.	Stored Pressure	Wheelhouse Stbd.	838513	06-2022	06-2016	2010	
	2	5 lb Dry Chem.	Stored Pressure	Wheelhouse Port	780375	06-2016	06-2016	2004	
	3	20 lb Dry Chem.	Stored Pressure	Wheelhouse Lobby	947074	05-2026	05-2020	2014	
	4	5 lb CO_2	Compressed Gas	Electronics Equipment Room	316570	05-2017		1997	
	5	5 lb CO_2	Compressed Gas	Radio Room	316561	05-2017		1997	
	6	5 lb CO_2	Compressed Gas	Special Navigation Chart Room	763455	05-2017		2012	
	7	5 lb CO_2	Compressed Gas	Battery Charging Compartment	316589	05-2018		1997	
	7A	10 lb Dry Chem.	Stored Pressure	(AG2) Auxiliary Generating Room	487812	05-2023	06-2017	2011	
	7B	15 lb CO_2	Compressed Gas	(AG2) Auxiliary Generating Room	3475	05-2019		2009	

Officer's Deck									
	#	Type		Location	Serial #	Hydro Due	6 Year Due	Man. Date	Comments
	8	5 lb Dry Chem.	Stored Pressure	Fire Station #1, Cross Alleyway	780380	06-2016	06-2016	2004	
	9	5 lb Dry Chem.	Stored Pressure	Outside Launderette	780377	06-2016	06-2016	2004	
	10	10 lb CO_2	Compressed Gas	Static Inverter Room	406611	05-2017		1997	
	11	5 lb Dry Chem.	Stored Pressure	Emergency Generator Room	11972	06-2015	06-2015	2003	
	HL	10 lb CO_2	Compressed Gas	FM 200 Locker	494245	05-2018		2008	

Boats									
	#	Type		Location	Serial #	Hydro Due	6 Year Due	Man. Date	Comments
	L/B P1	2 ½ lb Dry Chem.	Stored Pressure	Port Lifeboat	353875	05-2024	05-2018	2012	
	L/B P2	2 ½ lb Dry Chem.	Stored Pressure	Port LIfeboat	766068	06-2018	05-2018	2006	
	L/B S1	2 ½ lb Dry Chem.	Stored Pressure	Starboard Lifeboat	765167	06-2018	05-2018	2006	
	L/B S2	2 ½ lb Dry Chem.	Stored Pressure	Starboard Lifeboat	765195	06-2018	05-2018	2006	
	FRC 1	5 lb Dry Chem.	Stored Pressure	FRC CG 241	88627	06-2019	04-2018	1995	
	FRC 2	5 lb Dry Chem.	Stored Pressure	FRC CG 241	661025	05-2024	05-2018	2012	
	B3	10 lb Dry Chem.	Stored Pressure	Barge Wheelhouse	998639	01-2023	06-2017	2011	
	B4	10 lb Dry Chem.	Stored Pressure	Barge Eng. Room Stbd.	45015	05-2025	05-2019	2001	
	B5	10 lb Dry Chem.	Stored Pressure	Barge Eng. Room Port	45026	05-2025	05-2019	2001	

Boat Deck									
	#	Type		Location	Serial #	Hydro Due	6 Year Due	Man. Date	Comments
	12	5 lb Dry Chem.	Stored Pressure	Fire Station #2, Fwd Cross Alleyway	780385	06-2016	06-2016	2004	
	13	5 lb Dry Chem.	Stored Pressure	Aft Cross Alleyway	760790	06-2015	06-2015	2003	
	14	5 lb Dry Chem.	Stored Pressure	Fan Room (S) - Air Handling Unit #2 & #4	780381	06-2016	06-2016	2004	
	15	5 lb Dry Chem.	Stored Pressure	A/C Chiller Room (jS)	195423	06-2016	06-2016	2004	
	16	10 lb Dry Chem.	Stored Pressure	Helicopter Workshop	139991	06-2022	06-2016	2010	
	17	20 lb BC/PK	Stored Pressure	Helicopter Hangar, Forward	000167 C	06-2016	06-2016	2004	
	18	15 lb CO_2	Compressed Gas	Helicopter Hangar (P)	100283	05-2019		1989	
	19	20 lb BC/PK	Stored Pressure	Helicopter Hangar (P)	000174 C	06-2016	06-2016	2004	
	20	20 lb BC/PK	Stored Pressure	Helicopter Hangar (S)	000179 C	05-2019	06-2016	2002	
	21	10 lb Dry Chem.	Stored Pressure	Helicopter Hangar (S)	664000	06-2021	06-2015	1997	
	22	10 lb Dry Chem.	Stored Pressure	Helicopter Hangar (S)	663782	06-2021	06-2015	1997	
	23	10 lb Dry Chem.	Stored Pressure	Helicopter Hangar (P)	663996	06-2021	06-2015	1997	
	24	10 lb Dry Chem.	Stored Pressure	Helicopter Hangar (P)	663498	06-2021	06-2015	1997	
	25	50 lb Purple K	Stored Pressure	Helicopter Hangar (Centre)	176238	06-2022	06-2016	?	
	26	50 lb Purple	Stored Pressur	Helicopter Hangar	176235	06-2022	06-2016	?	

		K	e	(Centre)					
	27	10 lb Dry Chem.	Stored Pressure	Fire Station #19, Starboard Crane	487810	06-2023	06-2017	2011	

Upper Deck									
	#	**Type**		**Location**	**Serial #**	**Hydro Due**	**6 Year Due**	**Man. Date**	**Comments**
	28	5 lb Dry Chem.	Stored Pressure	Fire Station #3, Fwd. Cross Alleyway	316091	06-2015	06-2015	2003	
	29	5 lb Dry Chem.	Stored Pressure	Fire Station #4, Port Alleyway	780347	06-2016	06-2016	2004	
	30	5 lb Dry Chem.	Stored Pressure	Fire Station #5, Stbd Alleyway	839996	06-2022	06-2016	2010	
	31	5 lb Dry Chem.	Stored Pressure	Engine Room Casing Entrance	196045	06-2016	06-2016	2004	
	32	5 lb Dry Chem.	Stored Pressure	Fire Station #6, Aft Cross Alleyway	838518	06-2022	06-2016	2010	
	33	5 lb Dry Chem.	Stored Pressure	Officer's Dining Room	838502	06-2022	06-2016	2010	
	34	5 lb Dry Chem.	Stored Pressure	Officer's Lounge	760809	06-2015	06-2015	2003	
	35	5 lb Dry Chem.	Stored Pressure	Fan Room Aft	357586	05-2024	05-2018	2012	
	36	5 lb Dry Chem.	Stored Pressure	Salvage and Towing Equip. Room, Aft	87132	06-2022	06-2016	2010	
	37	10 lb Dry Chem.	Stored Pressure	Outside Paint Locker	H-869384	06-2021	06-2015	2009	

Spares									
	#	Type		Location	Serial #	Hydro Due	6 Year Due	Man. Date	Comments
	S1	10 lb Dry Chem.	Stored Pressure	F/F Spares Locker #257 Upper Deck	139985	06-2022	06-2016	2010	
	S2	10 lb CO_2	Compressed Gas	F/F Spares Locker #257 Upper Deck	75948	06-2016		1986	
	S3	5 lb Dry Chem.	Stored Pressure	F/F Spares Locker #257 Upper Deck	780379	06-2015	06-2015	2004	
	S4	5 lb Dry Chem.	Stored Pressure	F/F Spares Locker #257 Upper Deck	838541	06-2022	06-2016	2010	
	S5	10 lb Dry Chem.	Stored Pressure	F/F Spares Locker #257 Upper Deck	289231	06-2016	06-2016	2004	
	S6	5 lb CO_2	Compressed Gas	F/F Spares Locker #257 Upper Deck	290366	06-2016		1997	Behind Hoses
	S7	10 lb Dry Chem.	Stored Pressure	F/F Spares Locker #257 Upper Deck	140353	06-2022	06-2016	2010	
	S8	5 lb Dry Chem.	Stored Pressure	F/F Spares Locker #257 Upper Deck	269853	06-2022	06-2016	1998	
	S9	10 lb Dry chem.	Stored Pressure	F/F Spares Locker #257 Upper Deck	H-868720	06-2020	05-2020	2008	
	S10	10 lb CO_2	Compressed Gas	F/F Spares Locker #257 Upper Deck	316527	05-2017		1997	
	S11	5 lb Dry Chem.	Stored Pressure	F/F Spares Locker #257 Upper Deck	838554	06-2022	06-2016	2010	
	S12	5 lb Dry Chem.	Stored Pressure	F/F Spares Locker #257 Upper Deck	780386	06-2022	06-2016	2004	
	S13	10 lb Dry Chem.	Stored Pressure	F/F Spares Locker #257 Upper Deck	312160	05-2026	05-2020	2014	
	S14	5 lb Dry	Stored Pressur	F/F Spares Locker #257	838530	06-2022	06-2016	2010	

		Chem.	e	Upper Deck					
	S15	5 lb Dry Chem.	Stored Pressure	F/F Spares Locker #257 Upper Deck	661011	05-2024	05-2018	2012	
	LBP1A	2 ½ lb Dry Chem.	Stored Pressure	F/F Spares Locker #257 Upper Deck	272839	05-2026	05-2020	1988	
	LBP1	2 ½ lb Dry Chem.	Stored Pressure	F/F Spares Locker #257 Upper Deck	766072	06-2018	05-2018	2006	
	S16								

Main Deck									
	#	Type		Location	Serial #	Hydro Due	6 Year Due	Man. Date	Comments
	38	20 lb Dry Chem.	Stored Pressure	Fire Station #37, Bubbler Compartment	W443840	06-2022	06-2016	2010	
	39	5 lb Dry Chem.	Stored Pressure	Fire Station #37, Bubbler Compartment	780372	06-2016	06-2016	2004	
	40	5 lb Dry Chem.	Stored Pressure	Laundry Room (S)	682918	06-2021	06-2015	2009	
	40A	20 lb Dry Chem.	Stored Pressure	Central Stores	ZT-581921	05-2020	05-2020	2008	
	40B	5 lb Dry Chem.	Stored Pressure	Adjacent to Carpenter Shop	780346	06-2016	06-2016	2004	
	41	5 lb Dry Chem.	Stored Pressure	Gym	780364	06-2016	06-2016	2004	
	42	5 lb Dry Chem.	Stored Pressure	Fire Station #7, Fwd Cross Alleyway	195412	06-2016	06-2016	2004	
	43	5 lb Dry Chem.	Stored Pressure	Fan Room by Central Stores	838512	06-2022	06-2016	2010	
	43	5 lb	Compr	Electricians	93529	11-		2009	

	A	CO2	essed Gas	Workshop		2017			
	44	5 lb Dry Chem.	Stored Pressure	Fire Station #8, Port Alleyway	780387	06-2016	06-2016	2004	
	45	5 lb Dry Chem.	Stored Pressure	Fire Station #9, Starboard Alleyway	780363	06-2016	06-2016	2004	
	46	5 lb Dry Chem.	Stored Pressure	Incinerator Room	195388	06-2016	06-2016	2004	
	47	5 lb Dry Chem.	Stored Pressure	Engine Room Casing Entrance	780368	06-2016	06-2016	2004	
	48	5 lb Dry Chem.	Stored Pressure	Fire Station #10, Cross Alleyway by Lounge	780354	06-2016	06-2016	2004	
	49	5 lb Dry Chem.	Stored Pressure	Crew's Lounge	838519	06-2022	06-2016	2010	
	50	5 lb Dry Chem.	Stored Pressure	Crew's Mess	780348	06-2016	06-2016	2004	
	51	6 lt. Wet Chem.	Type K	Galley	AA801 065	06-2022	06-2016	2005	
	51 B	Wet Chem.	Stored Pressure	Galley	65092	04-2023	04-2017	2011	
	52 A	5 lb Dry Chem.	Stored Pressure	Galley	780362	06-2016	06-2016	2004	
	53	5 lb Dry Chem.	Stored Pressure	Fire Station #11, Aft Cross Alleyway	760782	06-2015	06-2016	2003	
	54	10 lb Dry Chem.	Stored Pressure	Cargo Hold	142551	06-2022	06-2016	2010	
	55	20 lb Dry Chem.	Stored Pressure	Fire Station #35, Steering Flat	442809	06-2022	06-2016	2010	
	56	5 lb Dry Chem.	Stored Pressure	Fire Station #35, Steering Flat	780350	06-2016	06-2016	2004	

Engine Room									
	#	Type		Location	Serial #	Hydro Due	6 Year Due	Man. Date	Comments
	57A	5 lb Dry Chem.	Stored Pressure	Engineers Workshop	195419	06-2016	06-2016	2004	
	57B	10 lb CO2	Compressed Gas	Engineers Workshop	461439	06-2016		2007	
	57C	15 lb CO2	Compressed Gas	Engineers Workshop for Hot Work	626219	05-2018		2008	
	HW1	10 lb CO2	Compressed Gas	Engineers Workshop for Hot Work	437755	05-2019		1997	
	HW2	20 lb CO2	Compressed Gas	Engineers Workshop for Hot Work	880733	05-2019		1989	
	HW3	15 lb CO2	Compressed Gas	Main Gen. Room, Upper Deck, Forward (P)	611466	05-2017		2007	
		10 lb CO2	Compressed Gas	Engineers Workshop for Hot Work	6255	05-2017		2008	
	58	5 lb CO2	Compressed Gas	Electricians Workshop	316615	05-2017		1997	
	59	10 lb CO2	Compressed Gas	Main Gen. Room, Upper Deck, Port	406653	05-2017		1997	
	59B	15 lb CO2	Compressed Gas	Fire Stn #34 Main Gen Rm Up Dk Fwd (P)	69898	05-2017		1987	
	59C	15 lb CO2	Compressed Gas	Fire Stn #34 Main Gen Rm Up Dk Fwd (P)	100280	05-2019		1989	
	60	5 lb Dry Chem.	Stored Pressure	Main Generator Room, Upper Deck, Forward (S)	87122	06-2022	06-2016	2010	
	61	5 lb Dry Chem.	Stored Pressure	Main Generator Room, Upper Deck, Aft (S)	838510	06-2022	06-2016	2010	
	62	5 lb	Stored	Heating	195390	06-	06-	2004	

		Dry Chem.	Pressure	Compartment, Forward (S)		2016	2016		
	63	5 lb Dry Chem.	Stored Pressure	Heating Compartment, Aft (S)	780339	06-2016	06-2016	2004	
	64	20 lb Dry Chem.	Stored Pressure	Heating Compartment, Aft (S)	442810	06-2022	06-2016	2010	
	65	5 lb Dry Chem.	Stored Pressure	Control Room, Forward	780340	06-2016	06-2016	2004	
	66	5 lb Dry Chem.	Stored Pressure	Control Room, Aft	780341	06-2016	06-2016	2004	
	67	10 lb CO2	Compressed Gas	Control Room, Forward	407463	05-2017		1997	
	68	5 lb Dry Chem.	Stored Pressure	Propulsion Motor Room, Upper Deck (S)	780369	06-2016	06-2016	2004	
	69	5 lb Dry Chem.	Stored Pressure	Propulsion Motor Room, Upper Deck (Center)	780309	06-2016	06-2016	2004	
	70	10 lb Dry Chem.	Stored Pressure	Helicopter Fuel Pump Room	H-869376	06-2021	06-2015	2009	
	71	5 lb Dry Chem.	Stored Pressure	Main Generator Room, Tank Top (P)	780361	06-2016	06-2016	2004	
	72	10 lb CO2	Compressed Gas	Main Generator Room, Tank Top, Fwd. (S)	73720	05-2018		1986	
	73	20 lb Dry Chem.	Stored Pressure	Main Generator Room, Tank Top, Aft (S)	W443841	06-2022	06-2016	2010	
	74	5 lb Dry Chem.	Stored Pressure	Main Gen. Room, Tank Top, Between M/E's 1 & 2	780365	06-2016	06-2016	2004	
	75	5 lb Dry Chem.	Stored Pressure	Main Gen. Room, Tank Top, Between M/E's 2 & 3	48864	06-2016	06-2016	2003	
	76	5 lb	Stored	Auxiliary	780382	06-	06-	2004	

		Dry Chem.	Pressure	Machinery Room, By Ladder		2016	2016		
	77	20 lb Dry Chem.	Stored Pressure	Auxiliary Machinery Room, By Ladder	443842	06-2022	06-2016	2010	
	78	5 lb Dry Chem.	Stored Pressure	Auxiliary Machinery Room, Aft	780342	06-2016	06-2016	2004	
	79	5 lb Dry Chem.	Stored Pressure	Prop. Mtr. Rm. Tank Top Fwd. (P)	838532	06-2022	06-2016	2010	
	80	5 lb Dry Chem.	Stored Pressure	Fire Stn #27, Prop. Mtr. Rm. Tank Top	780367	06-2016	06-2016	2004	
	81	20 lb Dry Chem.	Stored Pressure	Fire Stn #27, Prop. Mtr. Rm. Tank Top	443847	06-2022	06-2016	2010	

Note: The CO2 extinguishers have to be hydro tested every 5 years and the dry chemical extinguishers have to be hydro tested every 12 years.

71.2.2 Drawings

Drawing Number	Description	Electronic Number

71.2.3 Regulations

71.2.3.1 All work performed and any modifications made, must be compliant with the latest Canada Shipping Act Regulations and in particular to the Marine Machinery Regulations. All work shall meet Transport Canada approved class regulations.

71.2.4 Standards

71.2.4.1 All maintenance is to comply with applicable National Fire Protection Association standards.

71.2.5 Quality Assurance Program

71.2.5.1 As per the Contractors QA Program.

71.3 Technical

71.3.1 The Contractor shall remove the ship's portable fire extinguishers transport them to an authorized certified fire protection service company centre for annual servicing and testing and replace the extinguishers back on board in the correct location.

71.3.2 Hydro test and 6 year inspections will be performed on extinguishers as detailed in the tables above. Any extinguishers that are deemed not safe for re-use will be replaced by the contractor. The cost of replacements will be covered by 1379 action.

71.3.3 The Contractor shall verify that a sufficient number and type of extinguishers are on board to maintain the vessel's firefighting capability. The contractor shall present the findings to the Chief Engineer stating which regulations were used; include compliance with the Canada Shipping Act - Fire Detection Extinguishing Equipment Regulations. Recommendations for additional fire extinguishers shall be backed up by applicable regulations.

71.3.4 During the course of inspection any extinguisher repairs deemed necessary, shall be quoted for repairs and replacement by an equivalent extinguisher of type and size.

71.3.5 Each extinguisher shall be properly tagged to show the recent inspection date.

71.3.6 Upon completion of servicing ashore, the Contractor shall transport all extinguishers back onboard the ship and shall install them in their original positions to the satisfaction of the Chief Engineer. Each extinguisher shall be verified as being securely mounted.

71.4 Proof of Performance

71.4.1 Inspection

71.4.1.1 The Contractor shall notify the Chief Engineer of re-installation of timelines and arrange a walkthrough inspection of each mounting.

71.4.2 Testing/Trials

71.4.2.1 As required.

71.4.3 Certification

71.4.3.1 The Contractor is to provide a copy of required certification of the sub-contractor and technicians servicing the extinguishers.

71.4.3.2 Certification shall be on a date as close as practicable to the completion of refit.

71.5 Deliverables

71.5.1 Documentation (Reports/Drawings/Manuals)

71.5.1.1 The Contractor shall obtain two copies of all test certificates from the authorized fire protection service company centre and forward them to the Chief Engineer. The contractor shall provide a report (two written and one electronic) which outlines any repairs carried out to the extinguishers.

71.5.2 Spares

71.5.2.1 N/A.

71.5.3.1 Training

71.5.3.1 N/A.

72.0 STBD SHAFT SURVEY

72.1 Identification

72.1.1 The intent of this item is to remove the stbd tailshaft for survey by TC/MS.

72.1.2 This item shall be completed in conjunction with the following:
Specification # 15 VLE CI #26 Hull Coatings.

72.2 References

72.2.1 Equipment Data

72.2.1.1 Component Weights:
COUPLING = 3,252 KG;
PROPELLER = 14, 870 KG;
TAILSHAFT = 41,829 KG, 15.2 METERS LONG;
INTERMEDIATE SHAFT = 3,995 KG, 2 METERS LONG.

72.2.2 Drawings

Drawing Number	Description	Electronic Number
	Shaft Removal Cone 2 Pages attached	

72.2.3 Regulations

72.2.3.1 All work performed and any modifications made, must be compliant with the latest Canada Shipping Act Regulations and in particular to the Marine Machinery Regulations. All work shall meet Transport Canada approved class regulations.

72.2.4 Standards

72.2.4.1 Fleet Safety and Security Manual (DFO/5737)

72.2.4.2 Quality Assurance Standards

72.2.4.1 As per the Contractors QA program.

72.3 Technical

72.3.1 Contractor shall supply all equipment, enclosures, ventilation, staging, chain falls, craneage, slings, and shackles necessary to perform the work. All lifting equipment shall be appropriate for the expected duties, and be accompanied by current certification indicating, or be permanently marked as to being, of a safe working load for the expected duties.

72.3.2 The Contractor shall be responsible to arrange for TCMS survey when completing this specification item.

72.3.3 Due to the easily damaged nature of the tailshaft coating between liners, it is necessary to take special precautions during the removal and installation of the tailshaft to avoid contact between the coating and the ship's structure or lifting devices.

72.3.4 Whether supported on skids or slings, the weight of the tailshaft has to be carried in way of the bronze bearing surfaces only. Soft fabric slings or soft wood blocks are to be used.

72.3.5 A special skid is required to support the forward end of the shaft, and an end support piece with roller is bolted to the forward end of the tailshaft. Hardwood blocks, contractor supplied, are also required during removal operations to protect the shaft bearing staves.

72.3.6 A tailshaft extension cone has been fabricated to facilitate the removal and installation process. The contractor shall check this extension piece and be responsible for its safe usage and transportation from the Boat Deck to and from the Motor Room. (see attached sketches).

72.3.7 If the tailshaft needs to be turned over during this time, the contractor is to inform the Chief Engineer so that the lubricating water can be turned on. The turning gear is to be operated by ship's staff only.

72.3.8 Contractor is to note that the tailshaft cannot be removed from the sterntube using the lifting lugs on the ship. Separate lifting and support equipment is required.

72.3.9 It will be necessary to remove a section of an 8" support stanchion in way of the tailshaft coupling. While removed, the piece is to be made removable by welding flanges on each end of the removed section and also on the stanchions on the ship’s structure, such that the section of stanchion can be bolted back in place. The removed section of stanchion is to be reinstalled after all work on the tailshaft/coupling using new contractor supplied grade 8 hex head capscrews c/w flat washers, lock washers and hex head nuts.

72.3.10 Any hull mounted lifting lugs required for removals are to be provided and installed by contractor. The contractor is responsible for testing and certification of such lugs. Upon completion of work lugs are to be cut off, ground flush, and coated as per Specification VLE CI #26 Hull Coating.

72.3.11 Contractor to note that no high voltage cable supports or high voltage cables are to be let go, moved, etc., until the Chief Engineer has concurred. In addition, Contractor to ensure that no chain falls, slings, etc., bear against cables or piping in the area during lifting, moving or support operations.

72.3.12 The Wartsila mechanical stern tube seal shall be disassembled prior to removal of the shaft to prevent damage to the seal components. A Wartsila FSR shall be

present during the removal, disassembly, inspection, reassembly of the shaft seal. All components shall be cleaned, checked for wear and defects as per manufacturer's recommendations, and laid out for inspection. Any components found to be defective to be replaced with Owner supplied parts. The contractor is to include an allowance of $10,000 for the Wartsila FSR.

72.3.13 Weardown readings are to be taken on inside of sterntube after mechanical seal is removed and before tailshaft is uncoupled. Readings to be given to Chief Engineer.

72.3.14 Complete area forward of the forward sterntube bush is to be thoroughly scraped and wire brushed clean for application of Belzona metal compound. All holes and pitted areas to be properly prepared and filled with Belzona metal compound as per manufacturer's instructions. Surface preparation is to be to Power Tool Clean Standard SSPC-SP11.

72.3.15 After metal compound has completely cured, the Contractor is to apply two (2)coats of Interguard ENA 377, as per manufacturer's instructions - minimum thickness per coat = 6 mils dry.

72.3.16 Remove rope guard, propeller cone, and propeller. The propeller removal and fitting gear may be supplied by the Canadian Coast Guard and consists of hydraulic pump and fittings, pilgrim nut, special backing plate and other removal tools. Contractor shall be responsible for moving all tools from the ship to the drydock and returning and securing tools back on the ship after the work is completed. Propeller is removed with pilgrim nut, special backing plate, and ship supplied removal tools. All work is to be to as per manufacturer's instructions. Contractor is to note that lifting eyes in propeller bossing are for vertical lifts only and must not be used for pulls in any other directions. Any turning of the shaft required during this work is to be done by ship's personnel. Contractor to supply lubricating water for shaft if required.

72.3.17 Remove intermediate shaft/coupling bolts and motor/intermediate shaft bolts, supporting weight of intermediate shaft with slings. Morgrip bolts to be removed as per manufacturer's instructions with removal gear that may be supplied by the ship. Morgrip bolts are to be marked and reinstalled in their original holes. Morgrip bolts to be identified and put in a lathe and checked for trueness and bolt diameters measured. Both intermediate shaft flange face bolt holes to be checked for roundness and readings recorded. One typewritten copy of all readings to be given to Chief Engineer. Bolts are to be stowed in a traffic-free area.

72.3.18 Shaft brake disc to be unbolted and stowed if required. NOTE: Shaft brake chock fast to be renewed when brake reinstalled and proper alignment of brake maintained.

72.3.19 Withdraw tailshaft outboard sufficiently to install first lifting clamp on aft end of aft liner. Move intermediate shaft, complete with turning gear ring, to one side and secure. Turning gear unit may be unbolted at this time if required.

72.3.20 Coupling to be removed with Pilgrim nut and ship supplied tools. Chief Engineer to be in attendance at this time. It will be necessary to heat the coupling during removal operations. Coupling shall be heated from outside diameter; inside bore of coupling temperature range 144ºC to 196ºC maximum by electric heating blanket (Contractor Supply). Contractor to ensure this heating procedure does not damage or endanger any surrounding equipment or personnel. Flame heat is not to be used.

NOTE: Maximum pressure to pump off nut = 1380 kg/cm² (2000 psi), this pressure is NOT to be exceeded.

72.3.21 Install skid support. Withdraw tailshaft outboard until coupling taper is over forward end of skid and install end support piece on shaft. (to trial the new extension support cone (see attached sketches).

72.3.22 Roller on shaft support piece to be adjusted to allow roller to roll on forward bush staves.

NOTE: Hydraulic jack should be used to support forward end of shaft when adjusting height of roller. (roller will not be required if support cone is used).

72.3.23 Withdraw tailshaft until forward end of coupling taper is at bulkhead 34. Install second lifting clamp on forward end of aft liner.

72.3.24 Remove tailshaft aft until shaft support piece is at the end of the forward bush. Install shaped hardwood blocks (Contractor supplied) on bottom radius of sterntube to allow tailshaft to continue to move out on roller. Alternate blocks as required.

72.3.25 During this stage, the aft liner will clear the aft bearing. Special care must be taken to maintain the shaft alignment to prevent damage to the shaft coating between the liners.

72.3.26 Withdraw tailshaft until it is clear of forward bearing. Check alignment to ensure the forward liner will enter the after bearing and continue to withdraw. When the end support piece is at the forward end of the aft liner, check alignment and move carefully onto aft bearing surface. Continue to withdraw until approximately one meter of forward liner is clear of aft bearing and install third lifting clamp on forward liner. The weight and alignment of the tailshaft should now be controlled by the shipyard lifting gear. The tailshaft is now completely withdrawn.

72.3.27 Tailshaft to be stowed in a suitable Contractor supplied cradle to allow for inspection by TCMS. Cradle supports on shaft to be in way of bronze liners only. If sandblasting or any other potentially damaging work is being done in the vicinity of the withdrawn tailshaft, Contractor to supply and install protective covering over shaft.

72.3.28 Contractor to supply and schedule a certified technician to perform non-destructive testing on the following: Propeller key, Shaft and propeller keyways, Interior propeller taper, Forward and aft tailshaft shaft tapers.

72.3.29 Key and keyways to be measured with micrometers, measurements recorded and clearances shown.

72.3.30 Weardown readings, measured with inside and outside micrometers, to be taken between fwd and aft sterntube bearings and bronze liners on tailshaft and recorded. Three copies of the NDT test reports and micrometer readings shall to be given to the Chief Engineer within 2 calendar days of the testing.

72.3.31 While the tailshaft is removed the stern tube internals are to be inspected for defects. Particular attention is to be paid to inspecting the stern tube for'd end immediately aft of the seal. All sterntube and sterntube seal lubrication/cooling lines are to be proven clear and free from any obstructions.

72.3.32 Complete area in the stern tube between the forward and aft bushings (approximately 5m long x .75m dia.)to be thoroughly scraped and wire brushed clean to meet paint manufacturer's specifications. All debris to be completely removed ashore. All holes and pitted areas deeper than three millimeters (3mm) are to be properly prepared and filled with Belzona metal compound as per manufacturer's instructions. Surface preparation is to be to Power Tool Clean Standard SSPC-SP11.

72.3.33 After metal compound has completely cured, Contractor to apply two (2) coats of Intershield ENA 300, as per manufacturer's instructions - minimum thickness per coat = 6 mils dry.

72.3.34 All areas in sterntube fwd. flange face where metal has wasted to be cleaned as described above and filled with metal using approved electric arc welding procedures. Contractor to supply a copy of welding procedure used to Chief Engineer. Upon completion sterntube flange face to be ground smooth and level to accept new bulkhead gasket and to ensure no leaks exist between sterntube seal flange and bulkhead when the ship is re-floated.

72.3.35 Intershield ENA300 is to be applied to stern tube flange face and corresponding bulkhead area as per manufacturer's recommendations in two coats (minimum thickness per coating is 6 mils dry). Mechanical means of ventilation shall be provided for complete drying of the paint before reinstallation of the tailshaft.

72.3.36 Contractor to supply and schedule the services of a certified technician to perform a spark test on the coated sections of tailshaft with TCMS inspector and Chief Engineer in attendance. Should it be required to replace the existing tailshaft coating, as determined by spark test, Bidder to quote separately for this work, as specified under the following;
Existing coating to be removed in its entirety with tailshaft in support cradle.
Before any sandblasting to bring coated area to bare steel, ensure the following areas are protected: Stbd tailshaft stern tube opening to be completely sealed, bronze liners wrapped on Stbd shaft, and Port stern tube sealed in way of outer seal.
Sandblast steel between liners to quality recommended by tailshaft coating manufacturer, see attached information sheets.

The contractor is then to build a structure over the tailshaft such that the temperature and humidity within can be controlled and such that the temperature of the shaft can be brought up to that required for the application of the new protective coating.
New semi-transparent, glass-reinforced, epoxy-laminated shaft wrapping, Philadelphia Resins Phillyclad 1775/620TS, is to be supplied and applied in way of the previously covered areas.
New shaft wrapping to be applied according to Manufacturer's instructions under the direction of an authorized Service Representative, services who is the responsibility of the contractor. Allow $8000.00 for FSR travel expenses, to be adjusted by 1379 action upon proof of invoices.
Allow sufficient time for coating to cure before installing shaft. It is important to ensure the integrity of the coating between the liner/shaft interface to prevent the ingress of sea water under the bronze liners.

72.3.37 Inspection on the tailshaft will be carried out by the contractor and witnessed by the Chief Engineer and TC Marine safety with particular attention being paid to the following areas:
Forward and aft keys and keyways on the shaft tapers
Forward and aft shaft tapers
The forward and aft ends of the aft liner where it meets the tailshaft.
The forward and aft ends of the forward liner where it meets the tailshaft.
Forward and aft "Pilgrim" nut threads
Fwd and aft liners in way of bearing surfaces.
Fwd liner in way of the crane seal & liner extension.
NOTE:Forward and aft bearing staves are to be lubricated with liquid soap, Contractor supplied, sufficient to provide lubrication during shaft installation but not block water cooling passages. All tailshaft bearing surfaces are to be wiped completely clean of any dirt, sand, etc., before tailshaft is installed. No sand or grit blasting to be carried out until tailshaft installation is complete.

72.3.38 Reverse procedure to be used to install shaft. Care to be exercised to ensure shaft is correctly aligned with sterntube and epoxy liner and staves are not damaged during installation.

72.3.39 Taper end of tailshaft and coupling bore to be thoroughly cleaned and degreased using electrolytic cleaner. Key to be installed and proven true.

72.3.40 Coupling to be heated from outside diameter by electric heating blanket (Contractor Supply). Inside bore of coupling to be heated to 144ºC to 196ºC maximum. NOTE: Heat blanket shall be left on during push up. Contractor to ensure this heating procedure does not damage or endanger any surrounding equipment or personnel. Ensure tire on Pilgrim nut has been fully compressed.

72.3.41 Coupling to be located over tailshaft and moved up the taper using the Pilgrim nut to the datum mark - maximum travel is 4mm, minimum is 3.8mm. Contractor to take care clearance is maintained on either side of keyway.

72.3.42 With pressure left on Pilgrim nut, allow coupling to cool to ambient temperature. Check and record keyway clearances. Secure Pilgrim nut as per manufacturer's instructions.

72.3.43 Install shaft disc brake ring if required at this point. Intermediate shaft to be installed and bolted to propulsion motor. If turning gear unit was removed, Contractor to reinstall using new chockfast and taking care to correctly alignment of the gearing.

72.3.44 Final alignment check and bolting up of intermediate shaft to coupling flange not to be completed until the ship has been afloat for a minimum of 24 hours.

72.3.45 Original propeller to be installed as per manufacturer’s instructions.

72.3.36 Contractor to supply and install 2 new propeller 'O'-rings. 'O'-ring material to be 21mm DIA. nitrile rubber (hardness of 55/60). Shaft diameter in 'O'-ring location is approximately 754mm.

72.3.37 The propeller removal and fitting gear, which may be supplied by the Canadian Coast Guard consists of hydraulic pump and fittings, pilgrim nut, special backing plate and other removal tools. Contractor responsible for moving all tools from the ship to the drydock and returning and securing tools back on the ship after the work is completed.

72.3.38 Contractor to fit propeller to tailshaft. Contractor to quote on three fits plus price per fit for adjustment purposes. Fit between propeller and tail shaft to be to the satisfaction of attending TC/MS inspector and Chief Engineer.

72.3.39 For all fits except the last fit, propeller to be pushed up a maximum of 2mm travel. Start point load pressure on the hydraulic pump to measure the push up distance is 220 kN. Final push up distance and pressure to be as per ship supplied push up diagram.

72.3.40 After the propeller fit has been approved by TC/MS and the Chief Engineer the propeller and tailshaft mating surfaces are to be thoroughly degreased, tailshaft threads liberally coated with anti-seize compound and propellers pushed up on shafts with pilgrim nuts to required distance, as per Pilgrim Moorside recommendations and witnessed by the Chief Engineer. Final push up distances, pressures and key clearances (top & sides) to be recorded and given to Chief Engineer in three type written copies.

72.3.55 Pilgrim nut to be locked in place and grease pumped in circumferential grease fittings. Propeller cone to be installed and filled with tallow. Bolt holes to be cemented after bolts secured with stainless steel locking wire.

72.3.56 All welded lugs are to be removed and welding ground flush. Areas to be painted in conjunction with Hull Painting item- VLE CI #15 Hull Coatings.

72.3.57 After the ship has been afloat for a minimum of 24 hours, the final alignment readings between the intermediate shaft aft flange and the coupling flange are to be recorded. (See GAP and SAG graph supplied by Chief Engineer.) Coupling bolts to be installed.

72.3.58 All removals required for this work to be re-installed in good order and proven in working condition. All tools provided by CCG to be cleaned and returned to storage areas and secured under supervision of a Ship's Officer.

72.4 Proof of Performance

72.4.1 Inspection

72.4.1.1 The Contractor in conjunction with the Chief Engineer and TCMS Surveyor shall develop a list of hold points for inspection prior to the start of work. The Contractor shall supply as much notice as possible that hold points are about to be reached.

72.4.1.2 It shall be the responsibility of the Contractor to arrange all inspection requirements to satisfy TCMS.

72.4.2 Testing/Trials

72.4.2.1 The completed installation shall be functionally tested at varying speeds and loads during sea trials to the satisfaction of the Chief Engineer and attending TCMS Surveyor. All work is to be completed to the satisfaction of the Chief Engineer and attending TC Marine Safety Surveyor.

72.4.3 Certification

72.4.3.1 Only certified trades persons shall complete the work as detailed in this specification.

72.4.3.2 All lifting appliances and accessories shall be certified to at least 1.5 times the actual weight of components lifted or as required by local regulations.

72.5 Deliverables

72.5.1 Documentation (Reports/Drawings/Manuals)

72.5.1.1 The Contractor shall supply readings as specified two hard copies and one electronic copy are to be delivered to the Chief Engineer.

72.5.2 Spares

72.5.2.1 N/A.

72.5.3 Training

72.5.3 N/A.

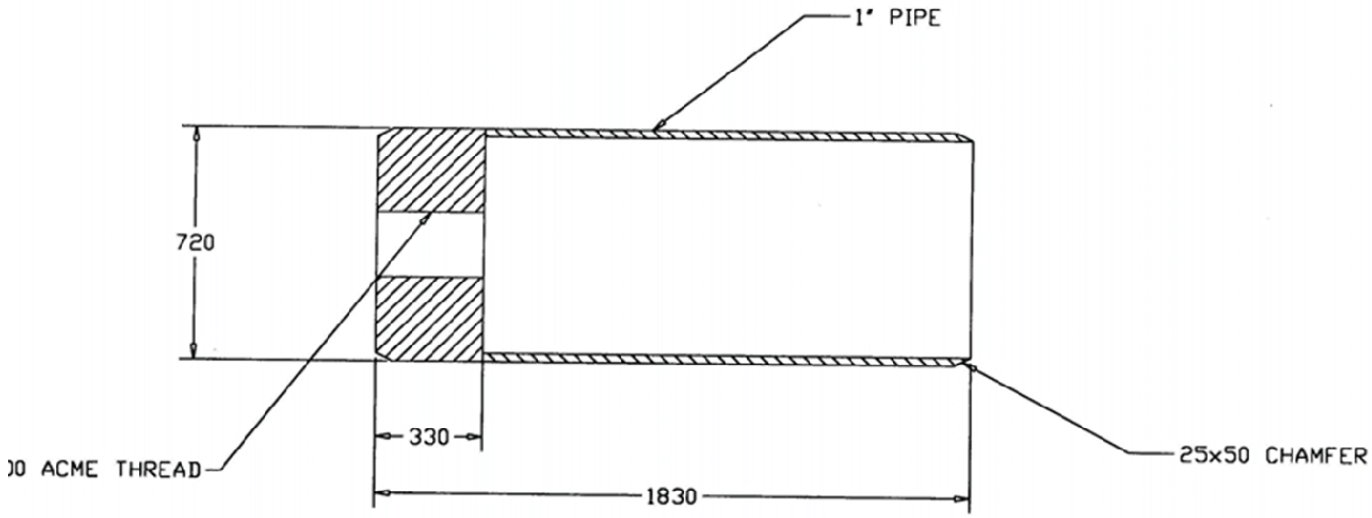

HENRY LARSEN
SHAFT REMOVAL CONE

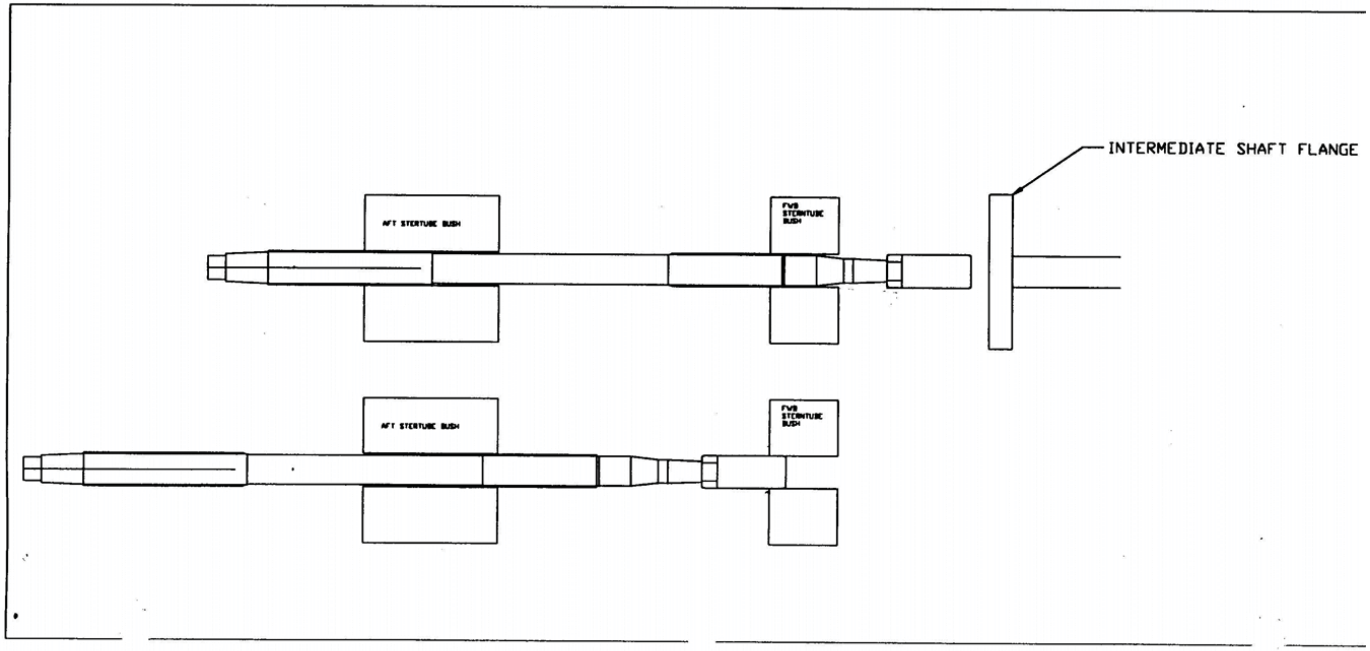
INTERMEDIATE SHAFT FLANGE
AFT STERTUBE BUSH
FVS STERNTUBE BUSH
AFT STERTUBE BUSH
FVS STERNTUBE BUSH

73.0 STBD STERNSEAL

73.1 Identification

73.1.1 The intent of this item is to unship the stbd shaft stern seal to facilitate removal of the stbd tailshaft, service the stbd stern seal, and obtain TCMS credit for the stern seal.

73.2 References

73.2.1 Equipment Data

73.2.1.1 John Crane Marine Seal 750 Mod 720 Type MB Seal
Wartsila TM-MB-01 Issue D manual.

73.2.2 Drawings

Drawing Number	Description	Electronic Number
H76738-02 Rev 4	GA of 750 Mod 720 Type MB Seal	

73.2.3 Regulations

73.2.3.1 All work performed and any modifications made, must be compliant with the latest Canada Shipping Act Regulations and in particular to the Marine Machinery Regulations. All work shall meet Transport Canada approved class regulations.

73.2.4 Standards

73.2.4.1 Fleet Safety and Security Manual (DFO/5737)

73.2.5 Quality Assurance Standards

73.2.5.1 As per the Contractors QA program.

73.2.5.2 Seal compression readings as per Sect 13.8.7 of the manual.

73.2.5.3 Seal test results within manufacturer's specifications.

73.3 Technical

73.3.1 The contractor is required to provide the services of an authorized John Crane Marine Seal FSR during the disassembly and reassembly of the seal. Contact: Barry Brodrick: Phone; (709) 747-4600 email: barry.broderick@wartsila.com.

73.3.2 Contractor to ensure that no damage occurs to ship's equipment and fittings as a result of this work.

73.3.3 Contractor to check free length of seal as per Sect 7.2.3 of the manual.

73.3.4 Disassemble necessary sea water and service air piping.

73.3.5 Disassemble seal as per Sect 13.6 of manual.

73.3.6 Refurbish seat as per Sect 13.7 of manual.

73.3.7 Ensure a new inflatable seal is installed if required.

74.3.8 Reassemble the seal as per Sect 13.8 of the manual.

74.3.9 Restoration, cleanup, Lubrication.

74.3.10 All debris to be carried ashore, area to be left in good order.

74.4 Proof of Performance

74.4.1 Inspection

74.4.1.1 Test the seal installation as per Sect 13.8.12 of the manual and record findings.

74.4.2 Tests/Trials

74.4.2.1 Test the seal installation as per Sect 13.8.12 of the manual and record findings.

74.4.3 Certification

74.4.3.1 The Contractor is responsible to ensure that only Certified Factory Trained technician work on this seal.

74.5 Deliverables

74.5.1 Documentation (Reports/Drawings/Manuals)

74.5.1.1 Seal Test results from paragraph 9 of manual.

74.5.1.2 Seal compression readings as per paragraph 10 of manual.

74.5.2 Spares

74.5.2.1 N/A.

74.5.3 Training

74.5.3.1 N/A.

74.0 TAILSHAFT WEARDOWN

74.1 Identification

74.1.1 The intent of this specification is to take both tailshaft bearing clearances at the stern tube rope guards.

74.1.2 This item shall be completed in conjunction with the following:
Specification # 72 VLE Stbd Tail Shaft Survey.

74.2 References

74.2.1 Equipment Data

74.2.1 N/A.

74.2.2 Drawings

Drawing Number	Description	Electronic Number

74.2.3 Regulations

74.2.3.1 All work performed and any modifications made, must be compliant with the latest Canada Shipping Act Regulations and in particular to the Marine Machinery Regulations. All work shall meet Transport Canada approved class regulations.

74.2.4 Standards

74.2.4.1 Fleet Safety and Security Manual (DFO/5737).

74.2.5 Quality Assurance Standards

74.2.5.1 As per the Contractors QA Program.

74.3 Technical

74.3.1 Contractor shall supply all equipment, enclosures, ventilation, staging, chain falls, craneage, slings, and shackles necessary to perform the work. All lifting equipment shall be appropriate for the expected duties, and be accompanied by current certification indicating, or be permanently marked as to being, of a safe working load for the expected duties.

74.3.2 The contractor is to take and record within eight hours of docking the ship the wear-down of the port and starboard tailshaft bearings with feeler gauges.

74.3.3 The port and stbd rope guards are to be removed in half sections and lowered to the dock bottom.

74.3.4 Upon completion and in conjunction with items the rope guards are to be reinstalled in good order.

74.4 Proof of Performance

74.4.1 Inspection

74.4.1.1 The Contractor is to notify Chief Engineer that readings are ready to be taken.

74.4.1.2 All work is to be completed to the satisfaction of the Chief Engineer.

74.4.2 Testing/Trials

74.4.2.1 The completed installation is to be functionally tested during sea trials to the satisfaction of the Chief Engineer and attending TCMS Surveyor. All work is to be completed to the satisfaction of the Chief Engineer and attending TC Marine Safety Surveyor.

74.4.3 Certification

74.4.3.1 Only certified trades persons shall complete the work as detailed in this specification.

74.5 Deliverables

74.5.1 Documentation (Reports/Drawings/Manuals)

74.5.1.1 A hardcopy and an electronic copy (pdf) of the readings obtained shall be passed to the Chief Engineer within 2 calendar days of being taken.

74.5.2 Spares

74.5.2.1 N/A.

74.5.3 Training

74.5.3.1 N/A.

75.0 THERMAL SCAN

75.1 Identification

75.1.1 The intent of this specification shall be to conduct an annual IR Thermal Scan of the vessels electrical distribution system including the 4160 Vac Main and 600 Vac Auxiliary Switchboard breakers and each associated switchboard connections as a TCMS requirement (TP127E). This scan may only be done with the vessel under maximum obtainable electrical load which will require testing during sea trials.

75.2 References

75.2.1 Equipment Data

75.2.1.1

Control Room		
Description	Location	Comment
P-4002 STBD Air Bubbler	Control Room	IR Window
P-4003 STBD Main Generator cell 2	Control Room	IR Window
P-4003 STBD Main Generator cell 3	Control Room	IR Window
PP-4004 STBD Propulsion Excitation	Control Room	IR Window
PP-4002-1 STBD Propulsion XFMR T3	Control Room	IR Window
PP-4002-2 STBD Propulsion XFMR T4	Control Room	IR Window
P-04002 Center Main Generator cell 7	Control Room	IR Window
P-04002 Center Main Generator cell 8	Control Room	IR Window
PP-4001-2 PORT Propulsion XFMR T2	Control Room	IR Window
PP-4001-2 PORT Propulsion XFMR T1	Control Room	IR Window
PP-4003 PORT Propulsion Excitation	Control Room	IR Window
PP-4001 PORT Main Generator	Control Room	IR Window
PP-4001 PORT Main Generator	Control Room	IR Window
P-4001 PORT Air Bubbler	Control Room	IR Window
1A 575 Volt Breakers	Control Room	Removable Bolted Panel
1B 575 Volt Breakers	Control Room	Removable Bolted Panel
2A Meters	Control Room	Removable Bolted Panel
2B Shore Power Supply	Control Room	Removable Bolted Panel
2C Phase Sequence Switch	Control Room	Removable Bolted Panel
3A Meters	Control Room	Removable Bolted Panel
3B Aux Generator #1 Breaker	Control Room	Removable Bolted Panel
3C Aux Generator #1 Voltage regulator	Control Room	Removable Bolted Panel
4A Metering & Controls	Control Room	Removable Bolted Panel
4B Main tie Breaker	Control Room	Removable Bolted Panel

4C Ventilation & Fan XFMR	Control Room	Removable Bolted Panel
5A Controls & Metering	Control Room	Removable Bolted Panel
5B Emerg Tie Breaker	Control Room	Removable Bolted Panel
5C PT-B Transformer	Control Room	Removable Bolted Panel
6A 575 Volt Breakers	Control Room	Removable Bolted Panel
6B 575 Volt Breakers	Control Room	Removable Bolted Panel
7A Volt Metering & Controls	Control Room	Removable Bolted Panel
7B 230 Volt Breakers	Control Room	Removable Bolted Panel
BA 11O Volt Breakers	Control Room	Removable Bolted Panel
BB 11O Volt Breakers	Control Room	Removable Bolted Panel
9A Aux. Generator #2 Metering	Control Room	Removable Bolted Panel
9B Aux. Generator #2 Breaker	Control Room	Removable Bolted Panel
1A Metering	Emergency Generator Rm	Removable Bolted Panel
1B 575 Volt Breakers	Emergency Generator Rm	Removable Bolted Panel
1C 575 Volt Breakers	Emergency Generator Rm	Removable Bolted Panel
2A Tie Breaker Metering	Emergency Generator Rm	Removable Bolted Panel
2B Emergency Tie Breaker	Emergency Generator Rm	Removable Bolted Panel
3A Emergency Generator Metering	Emergency Generator Rm	Removable Bolted Panel
3B Emergency Generator Breaker	Emergency Generator Rm	Removable Bolted Panel
4A 120 Volts Metering	Emergency Generator Rm	Removable Bolted Panel
4A 120 Volts Breakers	Emergency Generator Rm	Removable Bolted Panel
Propulsion Motor Starboard	Propulsion motor room	Removable Bolted Panel
Propulsion Motor Port	Propulsion motor room	Removable Bolted Panel
Shore Power XFMR	Diving Locker Main deck	Removable Bolted Panel
Starboard Main Generator	Main engine rm	IR Window
Centre Main Generator	Main engine rm	IR Window
Port Main Generator	Main engine rm	IR Window
Auxiliary Generator #1	Aux machinery space	IR Window

Auxiliary Generator #2	AG2 compartment	IR Window
Emergency Generator	Emergency Gen compartment	Removable Bolted Panel
Emergency Power XFMR	Emergency Gen compartment	Removable Bolted Panel
STBD Vital MCC XFMR	Propulsion Mtr rm	IR Window
Buss Tie Feeder XFMR	Propulsion Mtr rm	IR Window
Port Vital MCC XFMR	Propulsion Mtr rm	IR Window
Port Prop. Excitation XFMR	Propulsion Mtr rm	Hinged Panel
Starboard Prop. Excitation XFMR	Propulsion Mtr rm	Hinged Panel
Propulsion XFMR. # 1	Propulsion Mtr rm	Louvered door
Propulsion XFMR. # 2	Propulsion Mtr rm	Louvered door
Propulsion XFMR. # 3	Propulsion Mtr rm	Louvered door
Propulsion XFMR. # 4	Propulsion Mtr rm	Louvered door
XFMR. 3x100KVA 575/230Volt	Control Room	Removable Bolted Panel
XFMR. 3x100KVA 575/120Volt	Control room	Removable Bolted Panel
XFMR. Laundry/Galley		

75.2.2 Drawings

Drawing Number	Description	Electronic Number

75.2.3 Regulations

75.2.3.1 All work performed and any modifications made, must be compliant with the latest Canada Shipping Act Regulations and in particular to the Marine Machinery Regulations. All work shall meet Transport Canada approved class regulations.

75.2.4 Standards

75.2.4.1 TP-127E Electrical Rules/Regulations, and Canadian Electrical Code.

75.2.4.2 TCMS survey requirements for electrical machinery.

75.2.4 Quality Assurance Standards

75.2.4.1 Fleet Safety and Security Manual (DFO/5737).

75.3 Technical

75.3.1 The Contractor and Electrical Officer shall inspect the MCC's and determine the order in which they will be tested.

75.3.2 The Contractor shall provide the services of certified Infrared Thermographer who will, survey the 4160 Vac Main and 600 Vac Auxiliary Switchboard breakers and each associated switchboard connections, and the required transformers. All surveys shall be done at Vessel's peak operating loads to the satisfaction of the Chief Engineer.

75.3.3 The contractor is to record the current and allow a minimum of 20 minutes for temperature to stabilize for each load before test performed.

75.3.4 The Contractor will prepare a written report, detailing any defects or deficiencies discovered and the proposed corrective action to the attending) TCMS Inspector and Chief Engineer.

75.3.5 Any defects to be brought to the attention of the Chief Engineer and will be repaired by 1379 action.

75.4 Proof of Performance

75.4.1 Inspection

75.4.1.1 This specification is to be carried out in order to obtain TCMS survey credit.

75.4.2 Test/Trials

75.4.2.1 As above.

75.4.3 Certification

75.4.3.1 The Contractor performing the survey is to be at least a Level 2 Thermographer.

75.5 Deliverables

75.5.1 Documentation (Reports/Drawings/Manuals)

75.5.1.1 The Contractor shall produce three bound copies and one electronic copies of the reports of readings and digital images of deficiencies identified to be given to Chief Engineer. The contractor shall include an IR image and normal photographic views of each deficiency.

75.5.2 Spares

75.5.2.1 N/A.

75.5.3 Training

75.5.3.1 N/A.

76.0 ACCOMMODATION DUCT CLEANING

76.1 Identification

76.1.1 The intent of this item is to clean all Supply and Re-circulating ducting associated with HVAC systems on the Officers Deck, Boat Deck, Upper Deck and Main Deck areas.

76.1.2 This specification shall not be done till all work has been completed in the vessels interior, particularly Specification #16 Asbestos Removal.

76.2 References

76.2.1 Equipment Data

76.2.1.1 N/A.

76.2.2 Drawings

Drawing Number	Description	Electronic Number
DWG No. 15-0311-01	Ventilation & A/C Main Deck	
DWG No. 15-0311-02	Ventilation & A/C Upper Deck	
DWG No. 15-0311-03	Ventilation & A/C Boat Deck	
DWG No. 15-0311-04	Ventilation & A/C Officers Deck	

76.2.3 Regulations

76.2.3.1 All work performed and any modifications made, must be compliant with the latest Canada Shipping Act Regulations and in particular to the Marine Machinery Regulations. All work shall meet Transport Canada approved class regulations.

76.2.4 Standards

76.2.4.1

76.2.5 Quality Assurance Standards

76.2.5.1 As per the Contractors QA program.

76.3 Technical

76.3.1 The contractor shall provide the labour and materials to internally clean the ducting associated with Air Handling Units #1,2, 3, 4 and #5.

76.3.2 The contractor shall schedule the work in a manner that will ensure minimal disruptions to the ships personnel. The work schedule shall be agreed upon by both the Chief Engineer and the contractor.

76.3.3 With the ship's Electrical Officer the contractor is to ensure the Lockout/Tagout is in place. The contractor is to supply his/her own locks and tags but complete the vessel's Lockout/Tagout procedure.

76.3.4 The following locations are supplied air from Air Handling Unit #2:

76.3.5 Officers' Deck 378, 381, 381 Night Cabin, 383, 389, 389 Night Cabin, 385, and 367.

76.3.6 Boat Deck Room 339, 341, 343, 352, 350, 350 Night Cabin, and 345.

76.3.7 The following locations are supplied with air from Air Handling Unit #4:

76.3.8 Upper Deck Room 262, 260, 242, 244, 277, & 279.

76.3.9 Main Deck Room 130, 131, 132, & 133, Room 151, 162, 161, 160, 159, 158, & 157, 168, 167, 166, 165, 169, & 163.

76.3.10 Contractor shall clean out and disinfect the ducting. Care shall be taken to minimize the ingress of dirt, dust or debris into the connected spaces.

76.3.11 Access to the ducting will involve the removal of the deckhead diffusers in each space and opening the casing at the supply fan. The deckheads and diffusers will be removed for Asbestos Removal Specification Specification # 16.

76.3.12 Prior to reinstallation, all disturbed deckhead diffusers shall be washed with a degreaser.

76.3.13 Upon completion of work, all disturbed deckhead diffusers, deckhead panels, grids and casings, shall be restored to the original as found condition.

76.4 Proof of Performance

76.4.1 Inspections

76.4.1.1 The Contractor shall take digital HD colour photos prior to closing up labelled with locations, demonstrating cleanliness at various points throughout the duct work.

76.4.1.2 All work to be completed to the satisfaction of the Chief Engineer.

76.4.2 Testing/Trials

76.4.2.1 Upon completion of work, the Air Handling Units shall be run up and ductwork proven free and clear.

76.4.3 Certification

76.4.3.1 The Contractor shall provide MSDS sheets for all products used in the cleaning and disinfection of these systems.

76.5 Deliverables

76.5.1 Documentation (Reports/Drawings/Manuals)

76.5.1.1 The Contractor is to provide a written report in electronic pdf format to the Chief Engineer detailing as a minimum the as found condition, work performed, and digital images showing the before and after condition of the ducting.

76.5.2 Spares

76.5.2.1 N/A.

76.5.3 Training

76.5.3.1 N/A.

77.0 ACCOMMODATION LAUNDRY DRYER EXHAUST DUCT CLEANING

77.1 Identification

77.1.1 The intent of this item is to clean the clothes dryer(s) exhaust ductwork on the Officers Deck, Boat Deck, Upper Deck and Main Deck to remove any accumulation of lint and or debris.

77.2 References

77.2.1 Equipment Data

77.2.1.1 N/A.

77.2.2 Drawings

Drawing Number	Description	Electronic Number
	Laundry, Launderette, And Change room – Main Deck	
	Launderette Arrgts. Upper Dk. Boat & Officers Dk.	

77.2.3 Regulations

77.2.3.1 All work performed and any modifications made, must be compliant with the latest Canada Shipping Act Regulations and in particular to the Marine Machinery Regulations. All work shall meet Transport Canada approved class regulations.

77.2.3.2 As per OSH Regulations.

77.2.4 Standards

77.2.4.1 Fleet Safety and Security Manual (DFO/5737).

77.2.5 Quality Assurance Standards

77.2.5.1 As per the Contractors QA program.

77.3 Technical

77.3.1 The contractor shall schedule the work in a manner that will ensure minimal disruptions to the ships personnel. Both the Chief Engineer and the contractor shall agree upon the work schedule.

77.3.2 The Contractor in consultation with the vessel's Electrical Officer will lockout the power supply(s) to the dryers. The Contractor is to supply their own locks and tags and complete the vessel's Lockout/tagout procedure.

77.3.3 The contractor shall provide the labor and materials to internally clean the dryer exhaust ducting associated with the as fitted laundry dryers in the following spaces:

- Main Deck Laundry Room, Main Deck Room 200, at Fr.167
- Main Deck Launderette, Main Deck, Room 153, at Fr.116
- Oilers Change room, Main Deck, Room 152 at Fr. 16
- Upper Deck Launderette, Upper Deck Room 252, at Fr.122
- Boat Deck launderette, Boat Deck, Room 334, at Fr.122
- Officers Deck Launderette, Officers Deck Room 365, at Fr.112

77.3.4 The dryer exhaust ducting is to be cleaned from the dryer to the vent head on the vessel's exterior.

77.3.5 The Contractor shall clean out the dryer exhaust ducting by the application of suction at the supply and discharge ends. Care shall be taken to minimize the ingress of dirt, dust or debris into the spaces. Any ingress of dirt, dust or debris is to be cleaned up.

77.3.6 Any openings made in the ductwork are to be sealed using approved seals such that there are no leaks at the openings.

77.3.7 Upon completion of work, all disturbed ducting and associated fittings shall be restored to their as found condition.

77.3.8 The Chief Engineer will inspect disturbed ductwork before ceiling panels are reinstalled.

77.4 Proof of Performance

77.4.1 Inspection

77.4.1.1 All work to be completed to the satisfaction of the Chief Engineer.

77.4.2 Testing/Trials

77.4.2.1 Upon completion of work, the dryers shall be run up and ductwork proven free and clear.

77.4.3 Certification

77.4.3.1 The Contractor shall provide MSDS sheets for all products used in the cleaning and disinfection of these systems.

77.5 Deliverables

77.5.1 Documentation (Reports/Drawings/Manuals)

77.5.1.1 The Contractor is to provide a written report in electronic pdf format to the Chief Engineer detailing as a minimum the as found condition, work performed, and digital images showing the before and after condition of the ducting.

77.5.2 Spares

77.5.2.1 N/A.

77.5.3 Training

77.5.3.1 N/A.

78.0 ANCHORS & CHAINS

78.1 Identification

78.1.1 The intent of this specification is to perform a TC/MS survey on the anchors and chains and clean and paint the anchors and chains. This specification will be carried out in conjunction with Chain locker specification.

78.2 References

78.2.1 Equipment Data

78.2.1.1

Item	TCMS Field Numbers
Anchors	3LL120
Anchor Chain	3LL140

78.2.2 Drawings

Drawing Number	Description	Electronic Number

78.2.3 Regulations

78.2.3.1 All work performed and any modifications made, must be compliant with the latest Canada Shipping Act Regulations and in particular to the Marine Machinery Regulations. All work shall meet Transport Canada approved class regulations.

78.2.4 Standards

78.2.4.1 Blast Standard SSPC-SP6

78.2.5 Quality Assurance Standards

78.2.5.1 Fleet Safety and Security Manual (DFO/5737).

78.2.5.2 As per the Contractors QA program.

78.3 Technical

78.3.1 Contractor shall supply all equipment, enclosures, ventilation, staging, chain falls, craneage, slings, and shackles necessary to perform the work. All lifting equipment shall be appropriate for the expected duties, and be accompanied by current certification indicating, or be permanently marked as to being, of a safe working load for the expected duties.

78.3.2 The Contractor shall be responsible to arrange for TCMS survey when completing this specification item.

78.3.3 The port and starboard anchor chain bitter ends are to be released and the port and starboard anchors and anchor chains (10 shots to port, 9 shots to starboard) are to be ranged on the dock, and suitably supported for cleaning, painting and inspection by the Chief Officer and TC Marine Safety.

78.3.4 Chains are to be cleaned of all sand, mud and marine growth by high pressure fresh water cleaning, (approximately 2,000 psi). In preparation for painting, chains are to be abrasive blast cleaned to minimum SSPC-SP6 (ISO 8501-1:1988). If oxidation occurs between blasting and application of Intershield 300, the surface will be re-blasted to the specified visual standard. All grit to be blown clear prior to painting. The Contractor is to turn the chain over to accomplish this.

78.3.5 Chains are to be inspected by TC/MS Inspector prior to painting. All links are to be inspected and slack studs or missing lead pellets identified and reported. Contractor to quote on repairs to six (6) slack studs and quote unit cost per each additional stud.

78.3.6 Contractor is to measure 3 random links in each shot of chain port and stbd. All measurements are to be tabulated and a copy given to the Chief Engineer. Four measurements per link shall be taken.

78.3.7 The present first two (2) shots of chain, port and starboard, are to be disconnected and rotated to the position of last shots. Free ends to be reconnected to anchors with Babbitt pellets. Centre shackle pins to be sealed.

78.3.8 Chains to be given 1 (one) coat of Intershield 300 Bronze and (1) one coat of Interguard 345 Black. The Contractor is to turn the chain over and coat the underside .

78.3.9 Joining shackles are to be painted red with equal numbers of white painted links on either side. The number of white painted links is to correspond with the number of shots of cable paid out beginning from the anchor joining shackle. The outer end links of each white-painted set are to be marked by seizing wire close-hitched around the link stud.

78.3.10 Both anchors are to be are to be abrasive blast cleaned to minimum SSPC-SP6 (ISO 8501-1:1988). If oxidation has occurred between blasting and application of Intershield 300, the surface should be re-blasted to the specified visual standard and given (1) one coat of Intershield 300 Bronze and (1) one coat of Interguard Black.

78.3.11 Anchor shackle pins are to be removed for examination. Upon reassembly, new taper pins are to be fitted. Swivels are to be cleaned, inspected for smoothness of operation and lubricated.

78.3.12 On completion of above work, chains and anchors are to be re-shipped and secured in good order to the satisfaction of the Chief Engineer.

78.4 Proof of Performance

78.4.1 Inspection

78.4.1.1 The Contractor is to be responsible for all inspections and is to consult with TCMS, prior to commencement of work, to determine an inspection schedule; at each inspection point, the Contractor is to advise the Owner's representative, in advance, to allow his/her attendance.

78.4.1.2 All work to be completed to the satisfaction of the Chief Engineer.

78.4.2 Testing/Trials

78.4.2.1 As required by TCMS.

78.4.3 Certification

78.4.3.1 Only certified trades persons shall complete the work as detailed in this specification.

78.5 Deliverables

78.5.1 Documentation (Reports/Drawings/Manuals)

78.5.1.1 Contractor to supply 2 hard copies and 1 electronic pdf copy of all readings taken on the anchors and chains to the Chief Engineer.

78.5.2 Spares

78.5.2.1 N/A.

78.5.3 Training

78.5.3.1 N/A.

79.0 BATTERY CHARGER REPLACEMENT

79.1 Identification

79.1.1 The intent of this spec is to replace the obsolete Saft Ni-Cad battery chargers for the Alarm and Monitoring system, Switchboard controls and the Temporary Emergency Battery Bank with new contractor supplied chargers.

79.2 References

79.2.1 Equipment Data

79.2.1.1 Original Charger models and descriptions:

79.2.1.2 Temporary Emergency Battery Charger
CTS of Canada Ltd, Model 5731B17 1986 Ser 9571, Input 575 volt 3phase, 60HZ, 10 amps, Output voltage float 129 , equalize 143 Vdc, 40 amps , Battery bank is NI-CAD Saft SPH-115 NI-CAD.

79.2.1.3 Switchboard Controls Battery Charger, CTS of Canada Ltd, Model 5702A7 1986 Ser 9616, Battery bank is NI-CAD Saft SPH-170, 21 cells , voltage float 29, 90 amps max, equalize 32. Input is 3 phase, 120volt, 60HZ.

79.2.1.4 Alarm and Monitoring chargers (Qty 2) SAB NIFE Corporation, Model SCBF 600-24-250, article No. MC868B-1, Customer No 4220.2023-010, Serial No 98998, Input 575 Volt, 3 Phase, 60 HZ, 13.5 Amps, Output 24Volts Dc, 250Amp, Float voltage 28 Volts, Equalize 31.5. Battery Banks 20 Cells per bank Saft SPM-277.

79.2.2 Drawings

Drawing Number	Description	Electronic Number
35-0871-07	Equipment Layout Battery Charging Room & Battery Locker (Nav Br. Deck) Unit 731 Zone 022.tif	
13-0074-01	General Arrangement Officers Deck.TIF	
4725-65-88139-24	SAB Nife cabinet layout	

79.2.3 Regulations

79.2.3.1 All work performed and any modifications made, must be compliant with the latest Canada Shipping Act Regulations and in particular to the Marine Machinery Regulations. All work shall meet Transport Canada approved class regulations.

79.2.4 Standards

79.2.4.1 TP 127E Transport Canada, Marine Safety, Ship Electrical Standards, Current Edition.

79.2.4.2 IEEE Std 45-2014 Recommended Practice for Electrical Installations on board ships.

79.2.5 Quality Assurance Standards

79.2.5.1 Fleet Safety and Security Manual (DFO/5737).

79.2.5.2 As per the Contractors QA program.

79.3 Technical

79.3.1 The Temporary Emergency battery charger is located in the Inverter room on the officers deck. It has dimensions 20.25" wide, 31.5" High by 20.25 deep as evidenced by included picture below.

79.3.2 The minimum specifications of the replacement Temporary Emergency Battery Charger is as follows:

- Fully automatic battery charger
- Input: 575 Volts +/- 10%, 3 Phase, 60 Hertz, 9 A
- Output voltage: 125 VDC Nominal: Min VDC: 90 Max VDC: 144
- Output current: 40 Amp Nominal: Min IDC: 0 Max IDC: 40
- CABINET : Steel with Nema 1 with integrated drip shield
- VAC:575, Float: 129, Equalize: 142 user adjustable
- Ripple 100mV at batteries
- AC failure alarm, Delay: 30 sec,

- Earth leakage alarm: LCD message only: Negative, Adjustable: 5 mA, Delay: 30 sec,
- Earth leakage alarm: LCD message only: positive, Adjustable: 5 mA, Delay: 30 sec
- Manual Equalize, Time Out: 8 H
- High Volts Alarm: Battery, Adjustable, Delay: 30 sec
- High Volts Alarm: rectifier
- High Volts shutdown: min Delay: 30 sec
- Low DC Volts Alarm: battery, min Delay: 30 sec
- Low DC Volts Alarm: rectifier: 10minutes delay
- Rectifier failure alarm, Delay: 30 sec
- Class certified
- Blocking Diode
- Chargers to incorporate temperature compensation

79.3.3 The Switchboard Controls battery charger is located in the Inverter room on the Officers deck. It has dimensions 24.25" wide, 40" High by 20.25 deep as evidenced by included picture below.

79.3.4 The minimum specifications of the replacement Switchboard Controls battery charger are as follows:

- Fully automatic battery charger
- Input: 120 Volts +/- 10%, 3 Phase, 60 Hertz, 24 A
- Output voltage: 24 VDC Nominal: Min VDC: 18 Max VDC: 32
- Output current: 100 Amp Nominal: Min IDC: 0 Max IDC: 100

- Input and output circuit breaker
- CABINET : Steel with Nema 1 with integrated drip shield
- VAC:120, Float: 29.5, Equalize: 30.5 user adjustable
- AC failure alarm, Delay: 30 sec
- Manual Equalize, Time Out: 8 H
- Class Certified
- Blocking Diode

79.3.5 Chargers to incorporate temperature compensation.

79.3.6 The Alarm and Monitoring Battery Chargers are located in battery Charger room located on the bridge deck. Chargers are connected in parallel to Safe SPM 277, 20 Cells per bank. Each charger 24.25" wide, 31.5" deep and 82" high, !!Critical!! This is the maximum space available for these chargers due to other equipment, ingress/egress and servicing requirements. Space is very tight on these as seen in the picture below. Dimensional drawing below is for one charger only.

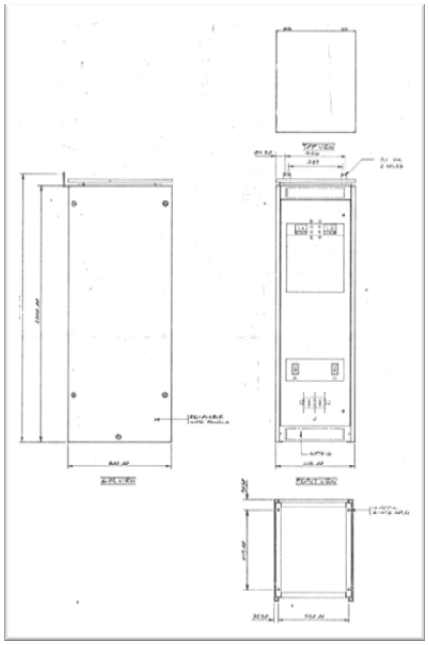

79.3.7 The minimum specifications of the two (2) replacement Alarm and Monitoring Battery Chargers is as follows:

- Fully automatic battery charger
- Input: 575 Volts +/- 10%, 3 Phase, 60 Hertz, 13 A
- Output voltage: 24 VDC Nominal: Min VDC: 18 Max VDC: 35
- Output current: 250 Amp Nominal: Min IDC: 0 Max IDC: 250
- Input and output circuit breaker

- CABINET : Steel with Nema 1 with integrated drip shield
- VAC:575, Float: 28, Equalize: 31.5 user adjustable.
- Ripple is 30mV @ batteries/NEMA PE5
- AC failure alarm, Delay: 30 sec
- Manual Equalize, Time Out: 8 H
- Class Certified
- Blocking Diode
- Chargers to incorporate temperature compensation

79.3.8 The Contractor will supply suitable replacements for the 4 chargers as mentioned above.

79.3.9 All chargers will be marine rated for Ni-Cad batteries and will be class certified as recognized by TCMS under the DSIP program.

79.3.10 All chargers will have the following standard features as a minimum:

- LCD with plain English to display all control, alarms readings and statuses c/w user friendly menu to adjust all parameters:
- 0.5%rms +/- 1 digit accuracy Digital voltmeter and ammeter (simultaneous readings).
- Automatic Current limit to 100% and voltage regulation to 0.5% RMS
- Flexible automatic equalize enabling and termination based on AC input failure, output voltage, output current, time or a combination of any of the above.
- 0-100 hours equalize time c/w 0-365 day cycles.
- Manual equalize start and termination with timer.
- Integrated input and output breaker.
- All Cable entry is to be at the bottom of all cabinets.
- Standard alarms: (includes individually adjustable time delays of minimum 30 seconds)
- High voltage DC
- Low voltage DC (up to 10 minute delay adjustable).
- AC failure
- Rectifier failure
- Positive ground fault (ability to disable)
- Negative ground fault (ability to disable)
- Other alarms that can be activated in the field (includes minimum adjustable 30 second delay).
- End of discharge (2nd low voltage level)
- High DC voltage shutdown
- Equalization on
- High ripple
- Low and high input frequency alarm and shutdown.
- High and low rectifier temperature alarm and shutdown.
- Rectifier high current
- Rectifier high voltage
- Rectifier low voltage

79.3.11 Each Charger will have dry set of N/C and N/O contacts for connection to the vessels alarm and monitoring system.

79.3.12 The contractor will remove all three battery chargers and will be isolated and locked out from their sources and from the individual battery banks.

79.3.13 The Contractor will mount the new changers in the space allotted for the old chargers.

79.3.14 The Contractor is responsible for the identification of all interference items, their removal, safe storage and replacement after installation of chargers.

79.3.15 The Contractor is responsible for the transportation and storage of the new chargers to the new as identified locations.

79.3.16 The old chargers will be held by CCG for disposal until new chargers are proven acceptable.

79.3.17 The Contractor is responsible for all welding/cutting, insulation removal and replacement as a result of new mounting arrangements if new chargers do not fit existing mounting arrangement.

79.3.18 The Contractor is responsible for disconnecting all wiring and returning all wiring to good order after new chargers are put in place. Any cabling damaged during the removals or installations will be the contractor's responsibility.

79.3.19 The intent is to re-use the existing cabling. In the event that cabling is not long enough due to placement of terminal strips/connection points, cables will be replaced if practical to the nearest junction box in the same compartment. Cables will be of identical construction and ratings as per the original cabling.

79.3.20 Where cabling is not of sufficient length and no connection/terminal boxes exist in the space, a suitable junction box may be place adjacent to the new charger. New cables will be of identical construction and ratings as per the original cabling.

79.3.21 All cables as they enter or exit panels or junction boxes if not already existant will have non-corrosive metal identification tags affixed detailing cable designations as per existing scheme.

79.3.22 A suggested supplier for the above charging equipment that meets all of the requirements as identified above is:
Stephen Monk
Western Sales Manager
Primax Technologies Inc.
65 Hymus Blvd., Pointe Claire, Quebec, Canada, H9R 1E2
Tel : (514) 459-9990 (ext: 2024) Fax : (514) 459-9991 Cell : (514) 945-3630
Email : smonk@primax-e.com Web : www.primax-e.com

79.4 Proof of Performance

79.4.1 Inspection

79.4.1.1 All installations will be to the satisfaction of the Chief Engineer and attending TCMS inspector.

79.4.2 Testing/Trials

79.4.2.1 Contractor is to supply the services of OEM FSR for charger to correctly configure charger for correct operation.

79.4.3 Certification

79.4.3.1 All chargers shall be Class certified.

79.5 Deliverables

79.5.1 Documentation (Reports/Drawings/Manuals)

79.5.1.1 The contactor is to deliver 3 hard copies and 1 electronic pdf copy of the following:

79.5.1.2 Charger operation and maintenance manual.

79.5.1.3 Full spare parts list, complete with current pricing, lead times and supplier contact information.

79.5.1.4 All manufactures test certificates as well as class certificates.

79.5.2 Spares

79.5.2.1 Contractor is to supply 1 full year of recommended spares as identified by the charger supplier.

79.5.3 Training

79.5.3.1 The Contractor shall allow in his bid for four hours training by the FSR for ship's personnel on the safe operation and frontline maintenance of chargers to be installed.

80.0 MAIN DECK COVERING RENEWALS

80.1 Identification

80.1.1 The intent of this specification is to replace the deck coverings in the alleyways in conjunction with the renewal of the grey water deck drains (Spec. #18) and replace the Main Deck coverings.. All materials to be contractor supply unless otherwise stated.

80.1.2 The following specification is to be completed in conjunction with the following specification items.

- VLE CI # 39 Spec #16 Asbestos Remediation.
- VLE CI# 18 Spec #18 Grey Water Deck Drains

80.2 References

80.2.1 Equipment Data

The following alleyways are to be refurbished.

Deck	Deck Covering	Drains	Deck approx. sq ft
Main Dk	Vinyl Tile	6	1570
Main Dk Stairs	Vinyl Tile		1.6 x 36 stairs 29 on 3 landings
Stair Tower	Vinyl Tile		1.6x63 stairs
Stair Tower Dks	Vinyl Tile	3	225

80.2.2 Drawings

Drawing Number	Description	Electronic Number
15-0252-01	Deck Covering Plan	
15-0401-01	Joiner and Insulation Details	
22-0708-01	Scuppers and interior drains	

80.2.3 Regulations

80.2.3.1 All work performed and any modifications made, must be compliant with the latest Canada Shipping Act Regulations and in particular to the Marine Machinery Regulations. All work shall meet Transport Canada approved class regulations.

80.2.4 Standards

80.2.4.1 Fire Ratings of each particular area of decking is to be maintained.

80.2.5 Quality Assurance Standards

80.2.5.1 Fleet Safety and Security Manual (DFO/5737).

80.2.5.2 As per the Contractors QA program.

80.3 Technical

80.3.1 All materials are to be contractor supply unless otherwise stated in this specification.

80.3.2 On the Main deck the tiles are over a 70 mm A-60 floating floor. The vinyl tiles on all decks and stairs are to be removed and discarded.

80.3.3 On the main deck, the areas that are still covered with the original floating floor shall have this replaced with a Dex-o-Tex decklite system or equivalent.

80.3.4 Contractor will remove approx. 600 sq ft of floating floor down to the steel deck. The areas in question are from frame 61-31 on the port side and including the after cross alleyway, the cross alleyway at frame 122 and from frame 84-141 on the stbd side, including the cabin entrances.

80.3.5 The deck is to be power tool cleaned, as required, to obtain a suitable surface for the new deck covering. After the steel has been prepared, the deck is to be primed with suitable marine grade primer.

80.3.6 The new 70mm Decklite system complete with cork soundproofing shall be installed on the bare deck.

80.3.7 The following portion of the work is covered by Specification #18, Technical Items 80.3.7 through to 80.3.11. Contractor is to disconnect all alleyway deck scuppers, as per the list above, from the drain piping. The upper decks are connected into PVC piping and the Main deck scuppers are connected to black iron pipe. All connections are 1 ½". Underlayment is to be removed as required to allow access to the deck around the scupper bell. The scupper bells are to be removed from the deck and the deck plating properly prepared for the installation of new scupper bells.

80.3.8 Contractor to supply and install 27 new scupper bells. Scupper bells are to be complete with integrated trap and brass grate cover. Bells are to be fillet welded on both sides of the deck. Scupper bells are to be located as per the original scuppers to allow for the proper thickness of deck covering. The deck scupper bells are to be attached to the existing grey water piping. All areas below the scuppers shall be protected against damage that may be caused by the removals and installations.

80.3.9 The deck around the scuppers is to be power tool cleaned, as required, to obtain a suitable surface for the new deck underlayment. After the steel has been prepared, and the new scuppers installed, the area around the scuppers is to be primed.

80.3.10 After the completion of the scupper installation, contractor is to repair the underlayment around the scuppers and tie into the existing. Contractor is to bid on repairing 40 sq ft of Dex-o-tex and 10 sq ft of Decklite underlayment in way of the scuppers. Contractor to quote on the unit cost for additional repairs.

80.3.11 The Owner's representative will select the colour for the deck covering. The contractor is to provide a sample of the available colours of the vinyl tile and the dex-o-tex for the entrance ways, to the owner's representative prior to application.

80.3.12 The eight entrance ways shall be covered in 10 mm of dex-o-tex with the edges being coved approx. 100 mm.

80.3.13 Upon completion of all scupper installations and underlayment repairs the contractor is to install the new vinyl tiles on all decks. Upon completion of the installations all decks shall be properly sealed and waxed using a high quality sealing/wax product.

80.3.14 All decks will be covered against damage after the installation of the tiles.

80.3.15 The Contractor shall be responsible to ensure that all areas have been thoroughly cleaned and free of any debris resulting from the performance of this specification item.

80.4 Proof of Performance

80.4.1 Inspection

80.4.1.1 All work to be to the satisfaction of the Chief Engineer.

80.4.2 Testing/Trials

80.4.2.1 N/A.

80.4.3 Certification

80.4.3.1 N/A.

80.5 Deliverables

80.5.1 Documentation (Reports/Drawings/Manuals)

80.5.1.1 The contractor is to provide MSDS sheets for all materials used to accomplish the work specified.

80.5.1.2 The Contractor shall develop a service report documenting before, during and after descriptions and photos. The Contractor shall include list of materials used including description, part numbers cost and suppliers.

80.5.2 Spares

80.5.3.1 The contractor is to supply a case of each type of tile utilized in the work for repair purposes.

80.5.3 Training

80.5.3.1 N/A.

81.0 UPPER & BOAT DECK COVERING RENEWALS

81.1 Identification

81.1.1 The intent of this specification is to replace the deck coverings in the alleyways in conjunction with the renewal of the grey water deck drains (Spec. #18) and replace the Upper Deck and Boat deck coverings.. All materials to be contractor supply unless otherwise stated.

81.1.2 The following specification is to be completed in conjunction with the following specification items.

- VLE CI # 39 Spec #16 Asbestos Remediation.
- VLE CI# 18 Spec #18 Grey Water Deck Drains

81.2 References

81.2.1 Equipment Data

The following alleyways are to be refurbished.

Deck	Deck Covering	Drains	Deck approx. sq ft
Boat Deck	Vinyl Tile	2	290
B. Deck Ent P	Dex-o-tex	1	25
B. Deck Ent S	Dex-o-tex	1	25
Upper Deck	Vinyl Tile	4	1044
Upper Dk Ent x4	Dex-o-tex	4	12
Engine Office	Vinyl Tile	1	76

81.2.2 Drawings

Drawing Number	Description	Electronic Number
15-0252-01	Deck Covering Plan	
15-0401-01	Joiner and Insulation Details	
22-0708-01	Scuppers and interior drains	

81.2.3 Regulations

81.2.3.1 All work performed and any modifications made, must be compliant with the latest Canada Shipping Act Regulations and in particular to the Marine Machinery Regulations. All work shall meet Transport Canada approved class regulations.

81.2.4 Standards

81.2.4.1 Fire Ratings of each particular area of decking is to be maintained.

80.2.5 Quality Assurance Standards

81.2.5.1 Fleet Safety and Security Manual (DFO/5737).

81.2.5.2 As per the Contractors QA program.

81.3 Technical

81.3.1 All materials are to be contractor supply unless otherwise stated in this specification.

81.3.2 The vinyl tiles are placed on 10mm dex-o-tex underlayment. On the Main deck the tiles are over a 70 mm A-60 floating floor. The vinyl tiles on all decks and stairs are to be removed and discarded.

81.3.3 The deck is to be power tool cleaned, as required, to obtain a suitable surface for the new deck covering. After the steel has been prepared, the deck is to be primed.

81.3.4 The new 70mm Decklite system complete with cork soundproofing shall be installed on the bare deck.

81.3.5 The six entrance areas, from the exterior decks, are to have the 10 mm dex-o-tex covering removed. Contractor will power tool clean the deck and prepare the deck for new dex-o-tex.

81.3.6 The following portion of the work is covered by Specification #18, Technical Items 80.3.6 through to 80.3.12. Contractor is to disconnect all alleyway deck scuppers, as per the list above, from the drain piping. The upper decks are connected into PVC piping and the Main deck scuppers are connected to black iron pipe. All connections are 1 ½". Underlayment is to be removed as required to allow access to the deck around the scupper bell. The scupper bells are to be removed from the deck and the deck plating properly prepared for the installation of new scupper bells.

81.3.7 Contractor to supply and install 27 new scupper bells. Scupper bells are to be complete with integrated trap and brass grate cover. Bells are to be fillet welded on both sides of the deck. Scupper bells are to be located as per the original scuppers to allow for the proper thickness of deck covering. The deck scupper bells are to be attached to the existing grey water piping. All areas below the scuppers shall be protected against damage that may be caused by the removals and installations.

81.3.8 The deck around the scuppers is to be power tool cleaned, as required, to obtain a suitable surface for the new deck underlayment. After the steel has been prepared, and the new scuppers installed, the area around the scuppers is to be primed.

81.3.9 After the completion of the scupper installation, contractor is to repair the underlayment around the scuppers and tie into the existing. Contractor is to bid on repairing 40 sq ft of Dex-o-tex and 10 sq ft of Decklite underlayment in way of the scuppers. Contractor to quote on the unit cost for additional repairs.

81.3.10 The Owner's representative will select the colour for the deck covering. The contractor is to provide a sample of the available colours of the vinyl tile and the dex-o-tex for the entrance ways, to the owner's representative prior to application.

81.3.11 The six entrance ways shall be covered in 10 mm of dex-o-tex with the edges being coved approx. 100 mm.

81.3.12 Upon completion of all scupper installations and underlayment repairs the contractor is to install the new vinyl tiles on all decks. Upon completion of the installations all decks shall be properly sealed and waxed using a high quality sealing/wax product.

81.3.13 All decks will be covered against damage after the installation of the tiles.

81.3.15 The Contractor shall be responsible to ensure that all areas have been thoroughly cleaned and free of any debris resulting from the performance of this specification item.

81.4 Proof of Performance

81.4.1 Inspection

81.4.1.1 All work to be to the satisfaction of the Chief Engineer.

81.4.2 Testing/Trials

81.4.2.1 N/A.

81.4.3 Certification

81.4.3.1 N/A.

81.5 Deliverables

81.5.1 Documentation (Reports/Drawings/Manuals)

81.5.1.1 The contractor is to provide MSDS sheets for all materials used to accomplish the work specified.

81.5.1.2 The Contractor shall develop a service report documenting before, during and after descriptions and photos. The Contractor shall include list of materials used including description, part numbers cost and suppliers.

81.5.2 Spares

81.5.3.1 The contractor is to supply a case of each type of tile utilized in the work for repair purposes.

81.5.3 Training

81.5.3.1 N/A.

82.0 BRIDGE & OFFICERS DECK RENEWAL.

82.1 Identification

82.1.1 The intent of this specification is to replace the deck coverings in the alleyways, replace the deck scuppers and replace the final section of original floating floor. All materials to be contractor supply unless otherwise stated.

82.1.2 The following specification is to be completed in conjunction with the following specification items.

- VLE CI # 39 Spec #16 Asbestos Remediation.
- VLE CI# 18 Spec #18 Grey Water Deck Drains

82.2 References

82.2.1 Equipment Data

The following alleyways are to be refurbished.

Deck	Deck Covering	Drains	Deck approx. sq ft
Bridge Deck	Vinyl Tile	1	132
Lower Bridge	Vinyl Tile	1	46
BR Deck Stairs	Vinyl Tile		1.6 x 18 stairs
BR Deck Ent P	Dex-o-tex	1	16
BR Deck Ent S	Dex-o-tex	1	16
Officers Deck	Vinyl Tile	2	195

82.2.2 Drawings

Drawing Number	Description	Electronic Number
15-0252-01	Deck Covering Plan	
15-0401-01	Joiner and Insulation Details	
22-0708-01	Scuppers and interior drains	

82.2.3 Regulations

82.2.3.1 All work performed and any modifications made, must be compliant with the latest Canada Shipping Act Regulations and in particular to the Marine Machinery Regulations. All work shall meet Transport Canada approved class regulations.

82.2.4 Standards

82.2.4.1 Fire Ratings of each particular area of decking is to be maintained.

82.2.5 Quality Assurance Standards

82.2.5.1 Fleet Safety and Security Manual (DFO/5737).

82.2.5.2 As per the Contractors QA program.

82.3 Technical

82.3.1 All materials are to be contractor supply unless otherwise stated in this specification.

82.3.2 The vinyl tiles are placed on 10mm dex-o-tex underlayment. On the Main deck the tiles are over a 70 mm A-60 floating floor. The vinyl tiles on all decks and stairs are to be removed and discarded.

82.3.3 The deck is to be power tool cleaned, as required, to obtain a suitable surface for the new deck covering. After the steel has been prepared, the deck is to be primed.

80.3.4 The new 70mm Decklite system complete with cork soundproofing shall be installed on the bare deck.

82.3.5 The four entrance areas, from the exterior decks, are to have the 10 mm dex-o-tex covering removed. Contractor will power tool clean the deck and prepare the deck for new dex-o-tex.

82.3.6 The following portion of the work is covered by Specification #17, Technical Items 80.3.6 through to 80.3.12. Contractor is to disconnect all alleyway deck scuppers, as per the list above, from the drain piping. The upper decks are connected into PVC piping and the Main deck scuppers are connected to black iron pipe. All connections are 1 ½". Underlayment is to be removed as required to allow access to the deck around the scupper bell. The scupper bells are to be removed from the deck and the deck plating properly prepared for the installation of new scupper bells.

82.3.7 Contractor to supply and install 27 new scupper bells. Scupper bells are to be complete with integrated trap and brass grate cover. Bells are to be fillet welded on both sides of the deck. Scupper bells are to be located as per the original scuppers to allow for the proper thickness of deck covering. The deck scupper bells are to be attached to the existing grey water piping. All areas below the scuppers shall be protected against damage that may be caused by the removals and installations.

82.3.8 The deck around the scuppers is to be power tool cleaned, as required, to obtain a suitable surface for the new deck underlayment. After the steel has been prepared, and the new scuppers installed, the area around the scuppers is to be primed.

82.3.9 After the completion of the scupper installation, contractor is to repair the underlayment around the scuppers and tie into the existing. Contractor is to bid on repairing 40 sq ft of Dex-o-tex and 10 sq ft of Decklite underlayment in way of the scuppers. Contractor to quote on the unit cost for additional repairs.

82.3.10 The Owner's representative will select the colour for the deck covering. The contractor is to provide a sample of the available colours of the vinyl tile and the dex-o-tex for the entrance ways, to the owner's representative prior to application.

82.3.11 The eight entrance ways shall be covered in 10 mm of dex-o-tex with the edges being coved approx. 100 mm.

82.3.12 Upon completion of all scupper installations and underlayment repairs the contractor is to install the new vinyl tiles on all decks. Upon completion of the installations all decks shall be properly sealed and waxed using a high quality sealing/wax product.

82.3.13 All decks will be covered against damage after the installation of the tiles.

82.3.14 The Contractor shall be responsible to ensure that all areas have been thoroughly cleaned and free of any debris resulting from the performance of this specification item.

82.4 Proof of Performance

82.4.1 Inspection

82.4.1.1 All work to be to the satisfaction of the Chief Engineer.

82.4.2 Testing/Trials

82.4.2.1 N/A.

82.4.3 Certification

82.4.3.1 N/A.

82.5 Deliverables

82.5.1 Documentation (Reports/Drawings/Manuals)

82.5.1.1 The contractor is to provide MSDS sheets for all materials used to accomplish the work specified.

82.5.1.2 The Contractor shall develop a service report documenting before, during and after descriptions and photos. The Contractor shall include list of materials used including description, part numbers cost and suppliers.

82.5.2 Spares

82.5.3.1 The contractor is to supply a case of each type of tile utilized in the work for repair purposes.

82.5.3 Training

82.5.3.1 N/A.

APPENDIX A Abbreviations

Definitions and Abbreviations
For the purpose of these Specifications, the following definitions and abbreviations must apply:

ABT
Automatic Bus Transfer

A/C or A.C.
Alternating Current

AFFF
Aqueous Film Forming Foam

AMS
Alarm and Monitoring System

ANSI
American National Standards Institute

Approved
Approved means Inspected and Stamped Approved from TCMS

As Fitted Drawings
A final drawing showing the “As fitted” condition of all equipment and system fittings. The “As Fitted” drawings must be the final revision of the drawing documenting the mark-up of the working drawings during installation.

A.S.M.E.
American Society of Mechanical Engineers

ASTM
American Society for Testing of Materials

Assistant Project Manager (APM)
The authorized representative of the Project Manager who will be the on-site contact for all technical related matters.

BHP
Brake Horsepower

Bi-Weekly
Where the words "bi-weekly" are used in these project Specifications, they must be understood to mean once every two (2) weeks.

B.S.I.
British Standard Institute

Btu/hr
British thermal unit per hour

CAD
Computer Aided Drafting

Calibrate
The word "calibrate" means that an instrument or piece of equipment must be mechanically, electrically disconnected and removed to a clean work place. The Contractor must clean and inspect all internal instrument movements. Calibration must be done using an instrument that is a calibration standard that has been certified by a recognized testing laboratory within a twelve month period of the date the test is carried out. Readings must be taken at six (6) equidistant points on the scale including zero and end of scale readings. Calibration seals and stickers must be affixed to instruments upon completion of calibration. Instruments are to be reinstalled and tested onboard ship. The Contractor must produce test sheets and when completed must be delivered to the Project Manager.

Canada
The Government of Canada as represented by the Canadian Coast Guard
Fisheries & Oceans Canada
50 Discovery Drive,
Dartmouth, NS.

CCGS
Canadian Coast Guard Ship

CD-ROM
Compact Disk – Read Only Memory

C.E.M.A.
Canadian Electric Manufacturer's Association

CGSB
Canadian General Specifications Board

C.I.
Cast Iron

Classification Society
Lloyd's Register of Shipping, its representatives and published Rules for the Construction and Classification of Steel Ships.

Contract Authority (CA)
An officer of the Public Works and Government Services Canada responsible for the management and administration of the Contract on behalf of Canada and the only person with authority to negotiate or effect amendments or any other variation to any provisions of the Contract.

Contractor Furnished Material (CFM)
Equipment and material furnished by the Contractor or the Sub-Contractor(s).

CP
Controllable Pitch

CPU
Central Processing Unit

CSA
Canadian Standards Association

C.S.A.
Canadian Shipping Act

cw or c/w
Complete with, or comes with – as in “c/w backsplash”

CWB
Canadian Welding Bureau

Day(s)
A working day(s) unless stated otherwise herein.

Db
Dry Bulb

dB
Decibels

dBA
A weighted system that assigns a weight related to how sensitive the human ear is to each sound frequency. The adjusted sounds are called A-weighted levels (dBA.)

dBm
Power measurement in the unit of decibels for use in telecommunications systems. The reference point, 0 dBm, is defined as 1 milliwatt of electrical power dissipated by a 600 Ω load.

deg. C (ºC)
Degree Celsius

deg. F (ºF)
Degree Fahrenheit

Dia, D or d
Diameter

Disassemble
The Contractor must provide all labour and materials to take apart, piece by piece, the equipment, machinery or system to be examined or overhauled.

Disconnect

The Contractor must provide all labour and materials to mechanically and electrically disconnect the piece of equipment from all piping, wiring, seats and other attachments with the purpose of permitting removal of the unit.

DFO
Department of Fisheries and Oceans Canada

Dock Trials
Consist of alongside acceptance trials of machinery systems and sub-systems prior to sea trials. These trials must be carried out only after all testing is complete.

DOL
Direct On Line

DVD
Digital Video Disk

ECR
Engine Control Room

EEMAC
Electrical and Electronic Manufacturer's Association of Canada.

EMI
Electromagnetic interference

Environmentally Controlled
This must be taken to mean heated, ventilated, cooled and lighted to the level required by the particular compartment. As a supplementary requirement, humidity control must also be included in cases where equipment which is sensitive to humidity must be stored.

FAT
Factory Acceptance Test

Field Service Representative (FSR)
A representative of either the Contractor or Sub-Contractor competent to supervise the installation and commissioning of machinery and equipment and to ensure satisfactory performance at all times during the specified warranty period.

FI-FO
First In – First Out

FMEA
Failure Mode Effect Analysis

fpm
Feet Per Minute

fps

Feet Per Second

FSM
Canadian Coast Guard Fleet Safety Manual

ft
Foot or Feet

g
Force exerted by gravity

GM (relating to ship stability)
Vertical distance between the Center of Gravity and the Metacentre.

GZ (relating to ship stability)
Perpendicular distance between the lines of action of the force of buoyancy and the weight of the vessel.

Government Furnished Equipment (GFE)
Equipment and material furnished by the Government and delivered to the Contractor's premises for installation or use onboard the vessel.

Guidance Drawings
Guidance drawings are provided strictly for guidance purposes only. The Contractor must physically verify all project requirements and must then develop working drawings for approval.

HMI
Human Machine Interface

Health Canada
Health Canada

HOT
Hand Held Operator Terminal

HP
Horsepower

Hz
Hertz

Inspection Authority
The Director, Inspection and Technical Services Public Works and Government Services Canada, is responsible for the inspection of the work and acceptance of the finished work under the Contract. The Inspection Authority will be represented on-site by an assigned Inspector.

Install

the word “install” means that the Contractor must provide all labour and provide the equipment to be installed, connect it mechanically, electrically, hydraulically and provide any other connections necessary to complete the installation.

Integrate
The Contractor must provide all labour and material necessary to combine systems and their features into a complete functional unit or system.

IPS
Iron pipe size

ID
Identification, as in number

IEEE
The Institute of Electrical and Electronics Engineers

IMO
International Maritime Organization

in
Inches

IO
Input/Output, as in device or list

IPS
Iron Pipe Size

JB
Junction Box

JPEG
Joint Photographic Experts Group

Lab
Laboratory

LAN
Local Area Network

lbs/hr
Pounds Per Hour

LED
Light Emitting Diode
M.B.H.
1000 British Thermal Units Per Hour

MCT's
Multiple Cable Transits

Megger Tester
The trade name for an instrument used for electrical circuitry insulation testing

MOSH
Marine Occupational Safety and Health Regulations as per Canada Shipping Act

Motor Repair/Rewind Service Center
Electrical motor repair/rewind service center with relevant experience dealing with large rotating marine electrical equipment.

m/s
Meters per second

MSDS
Material Safety Data Sheet

Mtg or mtg
Mounting – as in flush mounting

mV
Milli-volts

N.B.S.
National Bureau of Standards

N.C.
Noise Criteria

N.E.M.A.
National Electric Manufacturer's Association

N.F.P.A.
National Fire Protection Association

NFU
Non-follow-up, as in alarm

No.
Number

npt or NPT
National Pipe Thread

ODBC
Open Database Connectivity

OEM
Original Equipment Manufacturer

O.I.C
Officer In-Charge

On-Site
Within the confines of the Contractor's facility or where the repair of the vessel is to be conducted

Overhaul
The term “overhaul” as applied to any mechanical equipment, structure or system means the Contractor must incorporate into the work requirement as a minimum the following:

- Disassembly into component parts;
- Cleaning;
- Inspection of parts for defects;
- Gauging of parts for wear;
- Renewal or repair of parts worn beyond Specification limits or otherwise defective;
- Reassembly;
- Adjustment to Specification;
- Tests and functional trials.

Owner
Her Majesty, The Queen in Right of Canada as represented by the Minister of Fisheries and Oceans.

Owner Sea Trials
Additional sea trials conducted subsequent to the trials specified above the intention of which is to demonstrate the correct operation and performance of the vessel and its equipment to the owner.

O.S&Y.
Outside Screw and Yoke

PDF Format
Portable Document File format.

PAP
Project Action Plan

PC
Personal Computer

PCS
Propulsion Control System

PID
Proportional, Integral, Derivative control loop

PIT
Portable Interface Terminal

PLC
Programmable Logic Controller

PM
Preventative Maintenance

PMBoK
Project Management Body of Knowledge

PMI
Project Management Institute

PSI
Pounds per Square Inch

PSIA
Pounds per Square Inch Absolute

PSIG
Pounds per Square Inch Gauge

PWGSC
Department of Public Works and Government Services Canada

RCS
Remote Control System

Reassemble
The Contractor must provide all labour to put together, piece by piece, the equipment, machinery or system on completion of examination or overhaul.

Refurbish
The Contractor must provide all labour and materials to effect minor repairs, clean and refinish to like new condition.

Reinstall
The word “reinstall” means a piece of equipment the Contractor has removed that must be installed in its original location unless stated to relocate. The Contractor must provide all materials and labour to complete the installation.

Relocate
The Contractor must provide all labour and materials to remove the unit, piece of equipment or system and install the same unit, piece of equipment or system in a new location.

Remove
The Contractor must provide all labour and materials to remove the unit, equipment, materials or systems in its entirety. Part of the removal process must include the termination of any connected system which must remain on the vessel. As part of the removal process the Contractor must restore all disturbed surfaces such as insulation, linings, deck covering and paint coatings to their original condition.

Replace
The Contractor must provide all labour and materials to disconnect and remove existing equipment and material and supply and install new equipment and material to the extent specified in the Project Task Requirements.

RFI
Radio Frequency Interference

RIO
Remote Input/Output

RPM or rpm
Revolutions per Minute

RPU
Remote Processing Unit

RPU-TU
Remote Processing Unit for Terminal Units

SAE
Standards of Automotive Engineers

SCADA
Supervisory Control and Data Acquisition

SCR
Silicone Controlled Rectifier

Sea Trials
Consist of a full trial of all equipment and systems under operational conditions at sea. These trials must be carried out only after all dock trials are complete.

SHP or S.H.P.
Shaft Horsepower

Shop Test
Tests performed in a controlled environment ensure that the machinery has been built to Specification and is approved by TCMS before delivery.

S.N.A.M.E.

Society of Naval Architects and Marine Engineers

SOLAS
Safety of Life at Sea Convention as per IMO

SOP
Standard Operating Procedure

SP. In. WG.
Static Pressure, Inches Water Gauge

SS
Stainless Steel

T or t
Thickness, as in plate thickness

TCMS
Transport Canada Marine Safety is the final authority in the interpretation of the applicable Ship Safety Branch Standards.

Technical Authority (TA or CCG PM)
The Technical Authority must be responsible for all technical and operational aspects of the project requirements.

Tests
A test must be the verification of a component or part of a system. The test must ensure compliance with the Specification and demonstrate quality of workmanship.

TIF
Tagged Image File

TP
Transport Canada Publications

Trial
A trial must be carried out only on systems that are complete in all respects. The documentation must be complete and verified by the Technical Authority. The system must be fully marked and tagged. The trial must demonstrate the required performance of the system under all operating conditions. A trial must be carried out using normal system operating fluids.

U.L.
Underwriter's Laboratories

U.L.C.
Underwriter's Laboratories of Canada

UPS
Uninterrupted Power Supply

US gph
United States Gallon per Hour

US gpm
United States Gallon per Minute

USSG
United States Steel Gage

VAC (V A/C) or VAC
Voltage Alternating Current

VDC (V D/C) or VDC
Voltage Direct Current

TLE
Transitional Life Extension

VPI
Vacuum Pressure Impregnated

W
Watt

wb
Wet Bulb

WHMIS
Workplace Hazardous Material Information System

WSP
Working Steam Pressure

WOG
Water, Oil, Gas

Working Drawings
Detailed engineering drawings produced by the Contractor or sub-Contractors from the guidance drawings. The working drawings must be submitted for approval by TCMS where required. Working drawings must be used for field installations and must be marked-up with any corrections during field installations.

120/1/60
120VAC, Single Phase, 60 Hz

240/3/60
240VAC, 3 Phase, 60 Hz

600/3/60
600VAC, 3 Phase, 60 Hz

’
Denotes measurement in feet

”
Denotes measurement in inches

APPENDIX B Drawings

Vessel's Drawing List

Drawing Number	Rev.	Sht	Description
12-0001-01			FRAMING EXPANSION
12-0002-01	2		WEB FRAMES (18-61)
12-0003-01-02	2,1	1,2	WEB FRAMES (61-125)
12-0005-02	8	2	FORE END FRAMING
12-0006-01-02	8,6	1,2	AFT END FRAMING UNIT 607
12-0007-01	1		TANK TOP PLATING
12-0008-01	4		INNER BOTTOM STRUCTURE
12-0009-01			FLOORS, FRAMES (18-61)
12-0010-01	1		FLOORS, FRAMES (61-125)
12-0012-01	4		TRANSVERSE BULKHEADS, FRAMES 18 & 30
12-0013-01	2		TRANSVERSE BULKHEADS, FRAMES 61 & 89
12-0014-01	3		TRANSVERSE BULKHEADS, FRAMES 127& 140
12-0015-01	5		TRANSVERSE BULKHEADS, FRAMES 150 & 165
12-0016-01-02	2,2		SHELL EXPANSION, FORE & AFT & HULL BOUNDARIES
12-0017-01	3		LONGITUDINAL OIL/WATER TIGHT BHDS, TRANSVERSE BHD. FR. 34,WASH BHD FR.165-175
12-0024-01	4		PILLARS AND GIRDERS, FRAMES 13-175
13-0016-01			ERECTION AND WELDING SEQUENCE (SHELL)
13-0016-02			ERECTION AND WELDING SEQUENCE,HULL, DECKS AND SECTIONS
13-0016-03			WELDING SEQUENCE, SUPPERSTRUCTURE
13-0070-01	1		FIRE ZONE PLAN, PROFILE AND SECTIONS
13-0071-01	2		FIRE ZONE PLAN, TANK TOP, LOWER AND MAIN DECKS
13-0072-01			GENERAL ARRANGEMENT, PROFILE AND DECKS
13-0073-01			GENERAL ARRANGEMENT,NAVIGATION BRIDGE DECK AND WHEELHOUSE
13-0074-01			GENERAL ARRANGEMENT, OFFICER'S DECK
13-0075-01			GENERAL ARRANGEMENT, FLIGHT/BOAT & FORECASTLE DECKS
13-0076-01			GENERAL ARRANGEMENT, UPPER DECK
13-0077-01	1		GENERAL ARRANGEMENT, MAIN DECK
13-0078-01			DOCKING PLAN
13-0079-01	0		CAPACITY PLAN
13-0080-02	0		LAUNCHING ARRANGEMENT
13-0081-01-02			LINES PLAN, AFT & FORE BODY
14-0316-01	1		UNIT 316, TRANVERSE SECTIONS
15-0205-03			STEM CASTLE - FORE FOOT, STEM TRANSITION AND ICE KNIFE
15-0211-01	3	1	FOREMAST (UNIT 738), MAIN MAST (UNIT 734), & RADAR PLATFORM MODIFICATIONS
15-0253-01			NAVIGATION LIGHTS - ARRANGEMENT AND DETAILS
15-0311-01			VENTILATION & AC - MAIN DECK
15-0311-02			VENTILATION & AC - UPPER DECK
15-0311-03			VENTILATION & AC - BOAT DECK
15-0311-04			VENTILATION & AC - OFFICER'S DECK
15-0311-05			VENTILATION & AC - NAVIGATION BRIDGE DECK, WHEELHOUSE AND RAISED DECK
15-0311-06	5		FAN ROOM - MAIN DECK - ARRANGEMENT AND DETAILS
15-0316-05	1	1	OFFICER'S PANTRY ARRANGEMENT
15-0615-01			STEERING GEAR COMPARTMENT ARRANGEMENT
15-0615-03			RUDDER AND STERN FRAME ARRANGEMENT
15-0615-04	6		RUDDER STOCK

15-0615-05	1		RUDDER STOCK FORGING & UPPER PINTLE REMOVAL GEAR - 2 SHEETS
22-0310-01	5		DIAGRAM: VENTILATION - MACHINERY SPACE
22-0704-01-02	9,5		DIAGRAM: WATER- FRESH- DOMESTIC & SANITARY
22-0706-01	4		DIAGRAM: SEWAGE
22-0708-01	6		DIAGRAM: GREY WATER & INTERIOR DECK SCUPPERS AND DRAINS
22-0708-02	1		DIAGRAM: WEATHER DECK SCUPPERS - PROFILE AND DETAILS
22-0708-03	1		DIAGRAM: WEATHER DECK SCUPPERS - BOAT, UPPER AND FO'C'SLE DECKS
22-0708-04	1		DIAGRAM: WEATHER DECK SCUPPERS - WH TOP, NAV BRIDGE, OFFICERS DECK
22-0709-01	17		DIAGRAM: BILGE AND BALLAST
22-0709-02	7		DIAGRAM:OILY BILGE
22-0711-01	9		DIAGRAM: FIRE AND WASHDECK
22-0713-01	12		DIAGRAM: CENTRAL COOLING SYSTEM
22-0714-01	2		TRIMMING SYSTEM DIAGRAM
22-0715-01	4		HEELING / STABILIZING SYSTEM DIAGRAM
22-0716-01	6		AIR BUBBLER SYSTEM DIAGRAM
22-0719-01	5		CHILLED WATER SYSTM DIAGRAM
220720-01	7,5		LUBRICATING OIL DIAGRAM
22-0721-01	11		FUEL OIL TRANSFER DIAGRAM
22-0721-02	9		FUEL OIL SERVICE SYSTEM
22-0721-03	6		INCINERATOR DIAGRAM
22-0722-01-02-05	3,7		HYDRAULICS FOR WT DOORS, FUEL VALVES AND MISC. VALVES DIAGRAMS
22-0727-01	2		FOAM SYSTEM DIAGRAM
22-0729-01	10		THERMAL FLUID HEATING SYSTEM DIAGRAM
22-0733-01-02	15,14		VENTS AND SOUNDING DIAGRAM
22-0735-01	10		COMPRESSED AIR DIAGRAM
22-0738-01	2		HOT WATER HEATING DIAGRAM
22-0739-01			HELICOPTER FUEL DIAGRAM
22-0741-01-02	5,3		EXHAUSTS AND UPTAKES DIAGRAM
23-0209-01			EMERGENCY GENERATOR F.O.TANK
23-0209-03	2		LUBE OIL STORAGE TANK- PROPULSION MOTOR BEARING
23-0209-04	3		CENTRAL COOLING HIGH TEMPERATURE EXPANSION TANK (JW)
23-0209-05	4		CENTRAL COOLING LOW TEMPERATURE EXPANSION TANK (JW)
23-0209-06	2		HYDRAULIC OIL STORAGE TANK - STEERING GEAR
23-0209-08	3		FRESH WATER HEATING SYSTEM EXPANSION TANK
23-0209-09	3		A/C CHILLER WATER EXPANSION TANK
23-0209-11			THERMAL FLUID STORAGE TANK
23-0209-12			THERMAL FLUID FUEL OIL HEADER TANK
23-0209-16		4	HELICOPTER AVIATION GAS TANK
23-0223-03-04-05	1		FLOORPLATES AND LADDERS - ARRANGEMENT
23-0310-01	7		VENTILATION ARRANGEMENT - MAIN GENERATOR ROOM
23-0310-02	4		VENTILATION ARRANGEMENT - AULILIARY MACHINERY ROOM
23-0310-03	7,1	1,2	VENTILATION ARRANGEMENT - PROPULSION MOTOR ROOM
23-0310-04			CONTROL ROOM AIR CONDITIONING & VENTILATION ARRANGEMENT
23-0310-05	2	1	PLENUMS IN CASING - DETAILS
23-0310-06	1	1	VENTILATION IN CASING - SUPPLY - MAIN GENERATOR ROOM
23-0310-07	1	2	VENTILATION - INCINERATOR ROOM
23-0310-08	2		DUCTING - SUPPLY & EXHAUST IN CASING - AUXILLARY GENERATOR ROOM
23-0310-09	1		DUCTING - COMBUSTION AIR IN CASING
23-0310-10	1		DUCTING - SUPPLY & EXHAUST IN CASING - INCINERATOR ROOM
23-0311-01 & 22-0716-01	3	1	VENTILATION - BUBBLER COMP.& AIR BUBBLER SYSTEM
23-0311-02	4		VENTILATION - HELICOPTER FUEL COFFERDAM AND PUMP ROOM
23-0600-02	6		MACHINERY ARRANGEMENT PLAN AT LOWER DECK & ELEVATION STBD SIDE

23-0600-03	5		MACHINERY ARRANGEMENT SECTIONS
23-0600-04	4		MACHINERY ARRANGEMENT CENTER LINE ELEVATION & DECK PLANS IN CASING
23-0600-05	2		MACHINERY ARRANGEMENT SECTIONS THROUGH CASING
23-0600-06	7		MACHINERY LIST
23-0601-01	2		HOLD DOWN BOLTS AND CHOKES - MAIN GENERATORS
23-0601-02	6		HOLD DOWN BOLTS AND CHOKES - PROPULSION MOTOR
23-0602-01	4		HOLD DOWN BOLTS AND CHOKES - AUXILIARY GENERATOR # 1
23-0603-01	1		SEAT - EMERGENCY GENERATOR
23-0603-02			EMERGENCY GENERATOR ROOM ARRANGEMENT
23-0603-03	4		COMPOSITE PIPING ARRANGEMENT IN EMERGENCY GENERATOR ROOM
23-0603-04	1		LOUVERS - EMERGENCY GENERATOR VENT ARRANGEMENT
23-0611-01	6		SHAFTING ARRANGEMENT AND DETAILS
23-0611-02			TAILSHAFT INSTALLATION SKID ARRANGEMENT
23-0620-02		1,21	GAUGES
23-0621-01	4		REMOTE TANK GAUGING - ARRANGEMENT
23-0625-01-02-03			EXTENDED SPINDLES - ZONE 001,002,003
23-0628-01-02-03-04	2,4,5		LIFTING GEAR -ARR. 1 & 2 : LIFTING BEAM - PROP MOTOR RM., M/G. RM.,ENG.RM. CASING
23-0629-01	7		WORKSHOP ARRANGEMENT
23-0636-01	2	1	WHEELHOUSE SLAVE RODS - ARRANGEMENT
23-0703-01	2		SEA WATER INLETS
23-0703-02	4		AFT SEA CHEST ARRANGEMENT
23-0703-03	3		OVERBOARD DISCHARGES - ARRANGEMENT
23-0703-04	7		MAIN SEA BAYS AND SEA CHESTS - ARRANGEMENT
23-0703-05	1		DISTILLER SEA CHEST - ARRANGEMENT
23-0711-01	5		FIRE-FIGHTING EQUIPMENT - ARRANGEMENT
23-0714-02	1		HOLD DOWN BOLTS AND CHOKES FOR TRIMMING PUMP
23-0716-01-02	2,3		AIR BUBBLER (DISCHARGE SIDE & AIR INLET AND BLOWOFF) ARRANGEMENT
23-0722-11-12-13	2,4,5	1,2,3	WATER TIGHT DOORS HYDRAULIC - ARRANGEMENT
23-0722-21	2		QUICK CLOSE VALVES - ARRANGEMENT
23-0722-41-42	2		REMOTE VALVES - HYDRAULICS - ARRANGEMENT
23-0735-01	1		WHISTLE - PULL WIRES
23-0741-02			AUXILIARY GENERATOR EXHAUST PIPE ARRANGEMENT
23-0741-04			INCINERATOR EXHAUST - ARRANGEMENT
23-0741-05			THERMAL FLUID HEATER EXHAUST - ZONE 008 - ARRANGEMENT
23-0761-01			INSULATION SCHEDULE
23-0800-01		5	MODULE KEY ARRANGEMENT
23-0834-01	3		BILGE HIGH LEVEL ALARMS
25-0001-01	4		TANK TO PENETRATIONS AND DOUBLE BOTTOM PIPING- ZONE 001
25-0001-02	5		COMPOSITE ARRANGEMENT - BULKHEAD 61
25-0001-03	6		COMPOSITE ARRANGEMENT - BULKHEAD 30 - PROPULSION MOTOR ROOM
25-0001-04	2		COMPOSITE - WING TANK BULKHEAD - FRAMES 30-61 PORT
25-0001-05	4		COMPOSITE ARRANGEMENT -UNDER LOWER DECK - FRAMES 30-61
25-0001-06	1		COMPOSITE - WING TANK BULKHEAD - FRAMES 30-61 STBD
25-0002-01	3		TANK TOP PENETRATIONS FRAMES 110-127
25-0002-02	6		COMPOSITE PIPING ON WING TANK BULKHEAD PORT - FRAMES 61-89, ZONE 002
25-0002-03	2		COMPOSITE PIPING ON WING TANK BULKHEAD STBD - FRAMES 61-89, ZONE 003
25-0002-04	5		COMPOSITE ARRANGEMENT BULKHEAD 89
25-0002-05	4		COMPOSITE PIPING UNDER LOWER DECK ZONE 002 - FRAMES 61-89, UNITS 304/305
25-0002-06	1		SEA CHEST HEATING COILS - ARRANGEMENT
25-0003-01	3		TANK TOP PENETRATIONS - ZONE 003 - UNIT 104, FRAMES 90.5-110.5
25-0003-02	3		HEATING COIL FOR AFT HEELING TANK
25-0003-03	6		TANK TOP PENETRATIONS FRAMES (110-127)
25-0003-04	4		HEATING COIL FOR FORWARD HEELING TANK

25-0003-05	4		COMPOSITE ARRANGEMENT OF PORT BULKHEAD 7925 OFF CENTERLINE - M/G RM.
25-0003-06	6		COMPOSITE ARRANGEMENT OF STBD BULKHEAD 7925 OFF CENTERLINE - M/G RM.
25-0003-07	2		COMPOSITE ARRANGEMENT, BULKHEAD 127 - MAIN GENERATOR RM.
25-0003-08	6		COMPOSITE ARRANGEMENT - MAIN GENERATOR DRAIN TANKS
25-0003-09	5		COMPOSITE ARRANGEMENT OF LOWER DECK IN MAIN GENERATOR COMPT.
25-0004-01	5		COMPOSITE PIPING BELOW MAIN DECK
25-0005-01	7		BULKHEAD PENETRATIONS FRAMES 78-90
25-0005-02	3		BULKHEAD & DECK PENETRATIONS FRAMES 62.5-77.5
25-0005-03	3	1	COMPOSITE PIPING UNDER MAIN DECK (PENETRATIONS)
25-0005-04	3		COMPOSITE PIPING - AUXILIARY MACHINERY ROOM. FRAMES 61-89
25-0006-01	5		DECKHEAD AND BULKHEAD PENETRATIONS - FRAMES 90.5-110.5
25-0006-02	4		BULKHEAD AND DECK PENETRATIONS UNITS 211 AND 212
25-0006-03	3	1	COMPOSITE OF PIPING BELOW MAIN DECK
25-0006-04	2		COMPOSITE BELOW MAIN DECK - GREYWATER DETAILS
25-0006-05	3		COMPOSITE ARRANGEMENT - ZONE 6 PLAN
25-0006-06	3		COMPOSITE ARRANGEMENT - ZONE 6 SECTIONS AND ELEVATIONS
25-0010-01-02	1,3		COMPOSITE ZONE 010 - UNITS 601/602 & 604/605
25-0010-03	1		AVIATION FUEL STORAGE TANK PIPING CONNECTIONS
25-0011-02			CO2 / HALON ROOM PIPING
25-0013-01	3		COMPOSITE ARRANGEMENT OF DUCT KEEL FRAMES 122-168
25-0013-02	9		COMPOSITE ARRANGEMENT FRAMES 127-165, UNITS 213, 214, 215, 216, & 317
25-0013-03	2		COMPOSITE ARNG. - PNEUMATIC LINES, SCUPPERS, DRAINS & G.WATER,FRAMES 127-165
25-0014-01			COMPOSITE ARRANGEMENT ZONE (014-016)
25-0015-03	4		PIPING ARRANGEMENT IN MAIN DECK FAN ROOM
25-0021-02			ARRANGEMENT OF FILLING STATIONS
25-0022-02			FUNNEL MODULE FRAMEWORK
25-0022-03	2,3	1,2	COMPOSITE - FUNNEL
25-0022-05	5,3	1,2	PIPING ARRANGEMENT IN BOAT DECK FAN ROOM
25-0022-06	3		PIPING ARRANGEMENT IN OFFICER'S DECK FAN ROOM
25-0022-07	1	1	PIPING FUNNEL MODULE
25-0022-08	3		HALON LINES UNDER NAVIGATION BRIDGE DECK
25-0022-09	2		HALON ROOM PIPING
25-0023-01	6		A.C. CHILLER ROOM - ARRANGEMENT
25-0024-02	2		PIPING ARRANGEMENT IN UPPER DECK FAN ROOM
25-0026-01	2		COMPOSITE - UNIT 507 - ZONE 026
25-0027-01			COMPOSITE ARRANGEMENT - ZONE 027
25-0800-01	2		PIPING DETAILS - MODULE 800- ZONE OO1
25-0800-02			ZONE 001 MODULE 800 PIPE SUPPORTS SHT 1-2
25-0801-01	2	1	PIPING DETAILS - MODULE 801- ZONE OO1
25-0801-02			ZONE 001 MODULE 801 PIPE SUPPORTS SHT 1-2
25-0802-01	3	1	PIPING DETAILS - MODULE 802 - ZONE 001
25-0802-02			ZONE 001 MODULE 802 PIPE SUPPORTS
25-0803-01	7	1	PIPING DETAILS - MODULE 803 - ZONE 001
25-0803-02			ZONE 001- MODULE 803 - PIPE SUPPORTS SHT 1-2
25-0804-01	3		PIPING DETAILS - MODULE 804 - ZONE 001
25-0804-02			ZONE 001 - MODULE 804 - PIPE SUPPORTS
25-0805-01	2		PIPING DETAILS - MODULE 805 - ZONE 001
25-0805-02			ZONE 001 - MODULE 805 - PIPE SUPPORTS
25-0810-01	1,1	2,1	PIPING DETAILS - MODULE 810 - ZONE 002
25-0810-02	3	1	ZONE 002 - MODULE 810 - PIPE SUPPORTS SHT 1-2
25-0811-01	1,1,1	1,2,3	PIPING DETAILS - MODULE 811 - ZONE 002
25-0811-02	1	2	ZONE 002 - MODULE 811 - PIPE SUPPORTS SHT 1-2
25-0812-01	5,4	1,2	PIPING DETAILS - MODULE 812 - ZONE 002

25-0812-03	1		PIPING DETAILS - MODULE 812 - ZONE 002
25-0813-01	2,2	1,2	PIPING DETAILS - MODULE 813 - ZONE 002
25-0814-01	6,3	2,1	PIPING DETAILS - MODULE 814 - ZONE 002
25-0815-01	1,1	1,2	PIPING DETAILS - MODULE 815 - ZONE 002
25-0816-01	1		PIPING DETAILS - MODULE 816 - ZONE 002
25-0818-01	1,1	1,2	PIPING DETAILS - MODULE 818 - ZONE 002
25-0819-01	3,3	1,2	PIPING DETAILS - MODULE 819 - ZONE 002
25-0820-01	2,2	1,2	PIPING DETAILS - MODULE 820 - ZONE 003
25-0821-01	4,4	1,2	PIPING DETAILS - MODULE 821 - ZONE 003
25-0822-01	3,3	1,2	PIPING DETAILS - MODULE 822 - ZONE 003
25-0823-01	2,1	1,2	PIPING DETAILS - MODULE 823 - ZONE 003
25-0824-01	3		PIPING DETAILS - MODULE 824 - ZONE 003
25-0825-01	2,2	2,2	PIPING DETAILS - MODULE 825 - ZONE 003
25-0826-01	2		PIPING DETAILS - MODULE 826 - ZONE 003
25-0827-01	3		PIPING DETAILS - MODULE 827 - ZONE 003
25-0828-01	2		PIPING DETAILS - MODULE 828 - ZONE 003
25-0829-01	3		PIPING DETAILS - MODULE 829 - ZONE 003
25-0837-03	2		PIPING DETAILS - MODULE 837 - ZONE 003
25-0837-05	1	1	COMPOSITE - EXHAUSTS & VENTILATION - MODULE 837 AFT
25-0837-05	1	2	COMPOSITE PIPING - MODULE 837 AFT
25-0837-05	1	3	THERMAL FLUID HEATERS - EXHAUSTS - MODULE 837 AFT
25-0837-05	1	4	LADDERS AND GRATINGS - MODULE 837 AFT
25-0837-06	1	2	PIPING - FWD CASING PIPE RACK

APPENDIX C INSULATION PLAN

CONSOLIDATED INSULATION PLAN

LEGEND

DECKHEADS

- DENOTES ASBESTOS FREE THERMAL INSULATION (50 TH.)
- DENOTES ASBESTOS FREE THERMAL INSULATION (80 TH.)
- DENOTES ASBESTOS COATED THERMAL INSULATION (80 TH.)
- DENOTES ASBESTOS FREE AND FIRE INSULATION (80 TH.)
- DENOTES ASBESTOS COATED FIRE INSULATION (80 TH.)
- DENOTES ASBESTOS FREE AND FIRE/THERMAL INSULATION (80 TH.)
- DENOTES ASBESTOS COATED THERMAL INSULATION (80 TH.)
- DENOTES THERMAL INSULATION 25MM THICK ON DECKHEAD AND 25MM OVER STIFFENERS
- DENOTES THERMAL INSULATION 50MM THICK ON DECKHEAD AND 25MM OVER STIFFENERS
- DENOTES THERMAL INSULATION 100MM THICK ON DECKHEAD AND 50MM OVER STIFFENERS
- DENOTES A15 FIRE INSULATION 25MM THICK ON DECKHEAD AND 25MM OVER STIFFENERS
- DENOTES A30 FIRE INSULATION 50MM THICK ON DECKHEAD AND 25MM OVER STIFFENERS
- DENOTES A60 FIRE INSULATION 47MM THICK ON DECKHEAD AND 25MM OVER STIFFENERS
- DENOTES A60 FIRE INSULATION 50MM THICK ON DECKHEAD AND 25MM OVER STIFFENERS
- DENOTES A60 FIRE / THERMAL INSULATION 100MM THICK ON DECKHEAD AND 50MM OVER STIFFENERS

BULKHEADS

- THERMAL — DENOTES ASBESTOS FREE THERMAL INSULATION (100 THICK) – SEE (B-1)
- THERMAL — DENOTES ASBESTOS FREE THERMAL INSULATION (25 THICK) – SEE (B-2)
- THERMAL — DENOTES ASBESTOS COATED THERMAL INSULATION (100 THICK U.N.O.) – SEE (B-3)
- A60 — DENOTES ASBESTOS FREE A60 FIRE INSULATION (75 THICK) – SEE (B-4)
- A60 OR A15 — DENOTES ASBESTOS COATED FIRE INSULATION (A60=75 THICK) – SEE (B-5) (A60=38 THICK) – SEE (B-6) (A15=30 THICK) – SEE (B-7)
- SOUND — DENOTES ASBESTOS COATED SOUND INSULATION (50 THICK) – SEE (B-8)
- INDICATES SIDE OF BULKHEAD TO WHICH INSULATION IS FITTED

DECKS

- DENOTES GLASS AND FLOATING FLOOR SYSTEM (75 THICK) – SEE (D-1)

SHEATHING

- INDICATES PERFORATED ALUMINUM SHEATHING FITTED OVER INSULATION IN COMPARTMENT
- INDICATES GALVANISED SHEET METAL SHEATHING FITTED OVER EXPOSED INSULATION

PRINCIPAL PARTICULARS

LENGTH O.A.	78.82 m
EXTREME BREADTH ON SUMMER LWL	14.00 m
EXTREME DEPTH ON SUMMER LWL	9.000 m
L.B.P.P.P. LENGTH	65.000 m
HEIGHT MOULDED MAIN DECK	13.038 m
DEPTH MOULDED MAIN DECK	11.675 m
DEPTH A60 UPPER DA SOLEDERRE	11.000/11.025 m
SUMMER DRAFT MOULDED	7.000 m
TRAVEL DRAFT MOULDED	7.000 m
DESIGN RANGE	0.15..30 m
NET TONNAGE	1741.25 Tonnes
COMPONENT	73
PORT OF REGISTRY	OTTAWA
OFFICIAL No.	

DESCRIPTIONS

DECKHEADS

(A) – THERMAL INSULATION

- MATERIALS, SUBJECT TO THE APPROVAL OF EQUAL DENSITY 32 KG/M³.
- MINIMUM THICKNESS 100MM ON DECKHEAD WITH 50MM OVER STIFFENERS COMPLETE WITH FOIL VAPOUR BARRIER.
- INSULATION FITTED IN TWO LAYERS 50MM THICK. LAYER JOINTS STAGGERED.
- INSULATION EXTENDS HORIZ BEYOND MOUNTED EXPOSED BULKHEADS.
- INSULATION SECURED BY MEANS OF METAL PINS AND SPEED CLIPS ON 50MM CENTRES. PINS PLACED A MAXIMUM OF 75MM FROM INSULATION EDGE AND 150MM FROM INSULATION JOINTS.
- VALID TCMC CERTIFICATE OF APPROVAL REQUIRED.

(B) – THERMAL INSULATION

- MCS (WATERCORE) RUSS BATT INSULATION CLAD WITH WHITE CHEMAC CLOTH.
- MINIMUM THICKNESS 50MM ON DECKHEAD WITH 25MM OVER STIFFENERS.

(B1) – THERMAL INSULATION

- CAPCO "SLAKEWHEEL SILTP" SPRAY ON TYPE, DENSITY 210 KG/M³.
- DEDICATED WITH ASBESTOS LADEN SPRAY OF "MANDEMENABLE".
- INSULATION APPLIED NOT LESS THAN THICKNESS SHOWN ON THIS DRAWING.
- INSULATION FITTED FOR 600MM FROM HEADER SURFACES TO PREVENT PEELING ON ALL ADJOINING TREQUATION.
- CCG CERTIFICATE NO. 1G97-133 APPLIED BY ALEXANDER INSULATION OF VANCOUVER, B.C.

(B2) – A60 FIRE INSULATION

- ROCKS FRAM 60A OR EQUAL OF EQUAL DENSITY 80 KG/M³.
- MINIMUM THICKNESS 75MM ON DECKHEAD AND 25MM OVER STIFFENERS COMPLETE WITH FOIL VAPOUR BARRIER.
- INSULATION EXTENDS BEYOND ALL DECK AND BULKHEAD BOUNDARIES BY A MINIMUM OF 300MM.
- INSULATION SECURED BY MEANS OF METAL PINS AND SPEED CLIPS ON 50MM CENTRES. PINS PLACED A MAXIMUM OF 75MM FROM INSULATION EDGE AND 150MM FROM INSULATION JOINTS.
- TCMC CERTIFICATE OF APPROVAL No. LRTC 15-60001 (E1)

(B3) – FIRE INSULATION

- CAPCO "SLAKEWHEEL SILTP" SPRAY ON TYPE, DENSITY NOT LESS THAN 210 KG/M³. DEDICATED WITH ASBESTOS LADEN SPRAY OF "MANDEMENABLE".
- INSULATION APPLIED NOT LESS THAN THICKNESS SHOWN ON THIS DRAWING.
- INSULATION EXTENDS BEYOND ALL DECK AND BULKHEAD BOUNDARIES BY A MINIMUM OF 300MM.
- CCG CERTIFICATE NO. 1G94-80 APPLIED BY ALEXANDER INSULATION OF VANCOUVER, B.C.

(B4) – THERMAL/A60 FIRE INSULATION

- ROCKS FRAM 60A OR EQUAL OF EQUAL DENSITY 80 KG/M³.
- MINIMUM THICKNESS 100MM ON DECKHEAD AND 50MM OVER STIFFENERS COMPLETE WITH FOIL VAPOUR BARRIER.
- INSULATION EXTENDS BEYOND ALL DECK AND BULKHEAD BOUNDARIES BY A MINIMUM OF 300MM.
- INSULATION FITTED IN TWO LAYERS 50MM THICK. LAYER JOINTS STAGGERED.
- INSULATION SECURED BY MEANS OF METAL PINS AND SPEED CLIPS ON 50MM CENTRES. PINS PLACED A MAXIMUM OF 75MM FROM INSULATION EDGE AND 150MM FROM INSULATION JOINTS.
- CERTIFICATE OF APPROVAL No. LRTC 15-60001 (E1)

(B5) – THERMAL/A60 FIRE INSULATION

- CAPCO "SLAKEWHEEL SILTP" SPRAY ON TYPE, DENSITY NOT LESS THAN 210 KG/M³. DEDICATED WITH ASBESTOS LADEN SPRAY OF "MANDEMENABLE".
- MINIMUM THICKNESS 100MM ON DECKHEAD AND 50MM OVER STIFFENERS.
- INSULATION EXTENDS BEYOND ALL DECK AND BULKHEAD BOUNDARIES BY A MINIMUM OF 300MM.
- CCG CERTIFICATE NO. 1G94-80 APPLIED BY ALEXANDER INSULATION OF VANCOUVER, B.C.

BULKHEADS

(B) – THERMAL INSULATION

- MATERIALS, SUBJECT TO THE APPROVAL OF EQUAL DENSITY 32 KG/M³.
- MINIMUM THICKNESS 100MM ON BULKHEAD WITH 50MM OVER STIFFENERS COMPLETE WITH FOIL VAPOUR BARRIER.
- INSULATION EXTENDS HORIZ BEYOND MOUNTED EXPOSED BULKHEADS.
- INSULATION FITTED IN TWO LAYERS 50MM THICK. LAYER JOINTS STAGGERED.
- INSULATION SECURED BY MEANS OF METAL PINS AND SPEED CLIPS ON 50MM CENTRES. PINS PLACED A MAXIMUM OF 75MM FROM INSULATION EDGE AND 150MM FROM INSULATION JOINTS.
- VALID TCMC CERTIFICATE OF APPROVAL REQUIRED.

(B1) – THERMAL INSULATION

- MCS (WATERCORE) RUSS BATT INSULATION CLAD WITH WHITE CHEMAC CLOTH.
- MINIMUM THICKNESS 25MM ON BULKHEAD WITH 25MM OVER STIFFENERS.

(B2) – THERMAL INSULATION

- CAPCO "SLAKEWHEEL SILTP" SPRAY ON TYPE, DENSITY 210 KG/M³.
- DEDICATED WITH ASBESTOS LADEN SPRAY OF "MANDEMENABLE".
- INSULATION FITTED FOR 600MM FROM HEADER SURFACES TO PREVENT PEELING ON ALL ADJOINING TREQUATION.
- CCG CERTIFICATE NO. 1G97-133 APPLIED BY ALEXANDER INSULATION OF VANCOUVER, B.C.

(B3) – A60 FIRE INSULATION

- ROCKS FRAM 60A OR EQUAL OF EQUAL DENSITY 80 KG/M³.
- MINIMUM THICKNESS 75MM ON BULKHEAD WITH 25MM OVER STIFFENERS COMPLETE WITH FOIL VAPOUR BARRIER.
- INSULATION EXTENDS BEYOND ALL DECK AND BULKHEAD BOUNDARIES BY A MINIMUM OF 300MM.
- INSULATION SECURED BY MEANS OF METAL PINS AND SPEED CLIPS ON 50MM CENTRES. PINS PLACED A MAXIMUM OF 75MM FROM INSULATION EDGE AND 150MM FROM INSULATION JOINTS.
- CCG CERTIFICATE NO. 1G94-80 APPLIED BY ALEXANDER INSULATION OF VANCOUVER, B.C.

(B4) – FIRE INSULATION

- CAPCO "SLAKEWHEEL SILTP" SPRAY ON TYPE, DENSITY NOT LESS THAN 210 KG/M³. DEDICATED WITH ASBESTOS LADEN SPRAY OF "MANDEMENABLE".
- MINIMUM THICKNESS 75MM ON BULKHEAD WITH 25MM OVER STIFFENERS.
- INSULATION EXTENDS BEYOND ALL DECK AND BULKHEAD BOUNDARIES BY A MINIMUM OF 300MM.
- CCG CERTIFICATE NO. 1G94-80 APPLIED BY ALEXANDER INSULATION OF VANCOUVER, B.C.

(B5) – A60 FIRE INSULATION

- CAPCO "SLAKEWHEEL SILTP" SPRAY ON TYPE, DENSITY NOT LESS THAN 210 KG/M³. DEDICATED WITH ASBESTOS LADEN SPRAY OF "MANDEMENABLE".
- MINIMUM THICKNESS 25MM ON BULKHEAD WITH 25MM OVER STIFFENERS.
- INSULATION EXTENDS BEYOND ALL DECK AND BULKHEAD BOUNDARIES BY A MINIMUM OF 300MM.
- CCG CERTIFICATE NO. 1G94-80 APPLIED BY ALEXANDER INSULATION OF VANCOUVER, B.C.

(B6) – A15 FIRE INSULATION

- CAPCO "SLAKEWHEEL SILTP" SPRAY ON TYPE, DENSITY NOT LESS THAN 210 KG/M³. DEDICATED WITH ASBESTOS LADEN SPRAY OF "MANDEMENABLE".
- MINIMUM THICKNESS 25MM ON BULKHEAD WITH 25MM OVER STIFFENERS.
- INSULATION EXTENDS BEYOND ALL DECK AND BULKHEAD BOUNDARIES BY A MINIMUM OF 300MM.
- CCG CERTIFICATE NO. 1G94-80 APPLIED BY ALEXANDER INSULATION OF VANCOUVER, B.C.

(B7) – SOUND INSULATION

- CAPCO "SLAKEWHEEL SILTP" SPRAY ON TYPE, DENSITY NOT LESS THAN 210 KG/M³. DEDICATED WITH ASBESTOS LADEN SPRAY OF "MANDEMENABLE".
- MINIMUM THICKNESS 50MM ON BULKHEAD SHEATHED WITH PERFORATED ALUMINUM SHEET.

DECKS

(D1) – GLASS AND FLOATING FLOOR

- MATERIALS, 50MM THICK SHEET WITH 20MM WAMPLE TOP COAT OF DEO-O-RED SEDULIT AND SYSTEM WITH NOISE INSULATING CORK OVERLAY.
- CCG CERTIFICATE NO. 1G96-44

REFERENCE PLANS:

No.	Dwg No.	DESCRIPTION
1	13-0601-01	JOINERS & INSULATION DETAILS
2	13-0601-02	INSULATION PLAN - UPPER/LOWER/BRIDGE, CAPITAL DAY, DR., WHEELS DUCS & HAND.
3	13-0601-03	INSULATION PLAN - TANK TOP, LOWER & MAIN DECKS
4	J13008-A01	ASBESTOS REMOVAL PROC. - DUCSS HABIL, HANDY DAY REMOVATION AREAS

GENERAL NOTES:

1. ALL DIMENSIONS ARE IN MILLIMETERS UNLESS NOTED OTHERWISE.
2. FRAME SPACING MEANS FROM FR.33 THRU FR.125 AND 400mm ELSEWHERE.
3. ALL DIMENSIONS ARE FOR PORT AND STARBOARD UNL.
4. INSULATION INSTALLED IN STRICT ACCORDANCE WITH TCMC APPROVED CERTIFICATE INSTRUCTIONS.
5. ALL INSULATION VAPOUR BARRIER SEAMS AND/OR JOINTS ARE SEALED WITH FOIL TAPE.
6. INFORMATION APPEARING ON THIS DRAWING DERIVED FROM REFERENCE DRAWINGS 1 THRU 4.
7. WATCHES WHERE ABOVE INSULATION AT THE DECKHEAD OPEN, AND AT BULKHEADS FORWARD THE BOUNDARIES OF THE COMPARTMENT.

No.	Date	By	Revision
1	01-10-14	BH	UPDATED DUCT TO SUIT TCMC APPROVAL

Templeton Wood Engineering

Client: CCG/DFO

Title: CCGS HENRY LARSEN
INSULATION PLAN
LEGEND, NOTES & DESCRIPTIONS

Drawn By:	BH	Date:	04-02-14
Checked By:	DC	Scale:	1:100 Rev: 1
	Approved/Rev:	JOB NO:	
Check:		J13008-A02	
Check:			
Eng:		Sht No: 1 of 1	

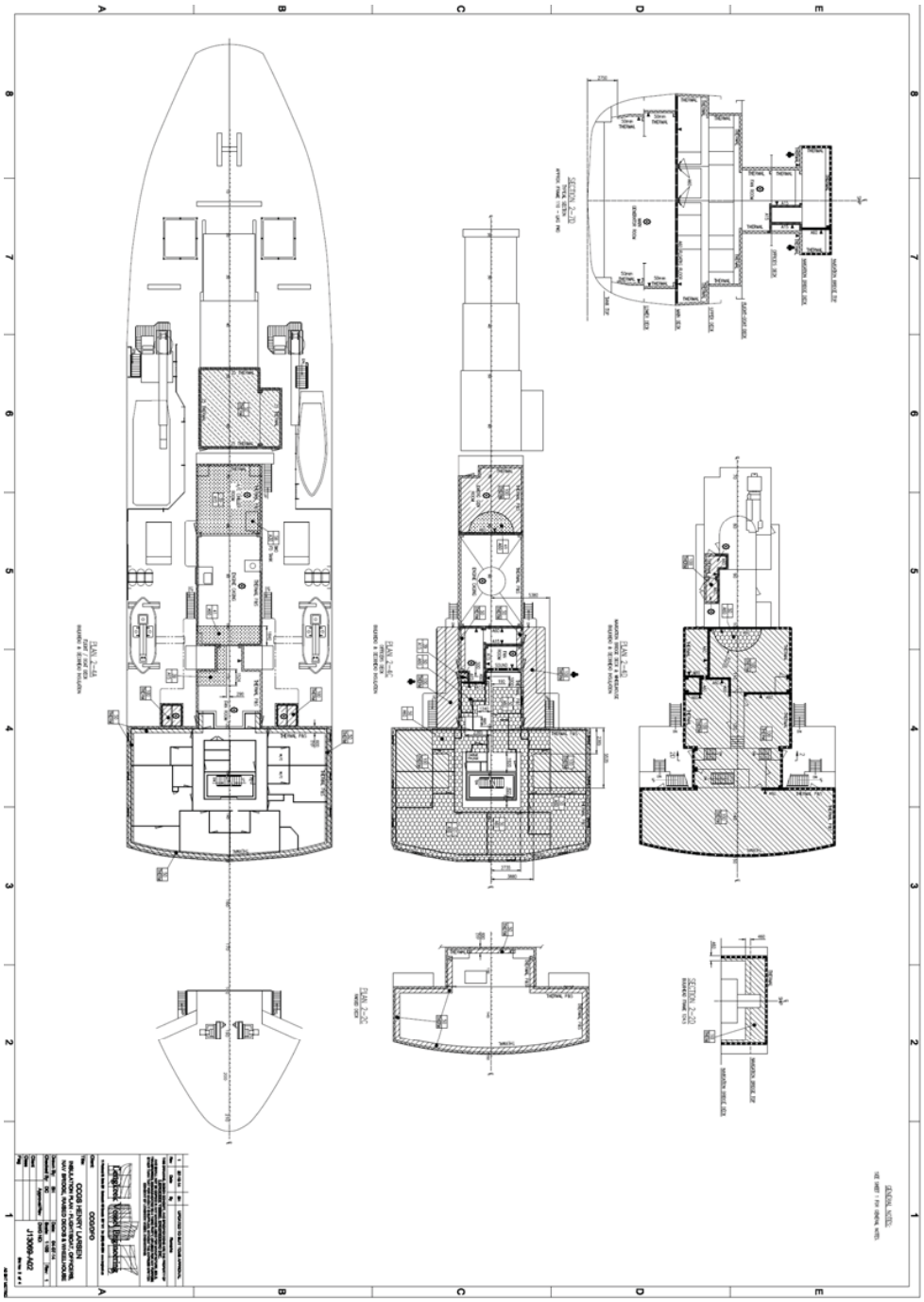

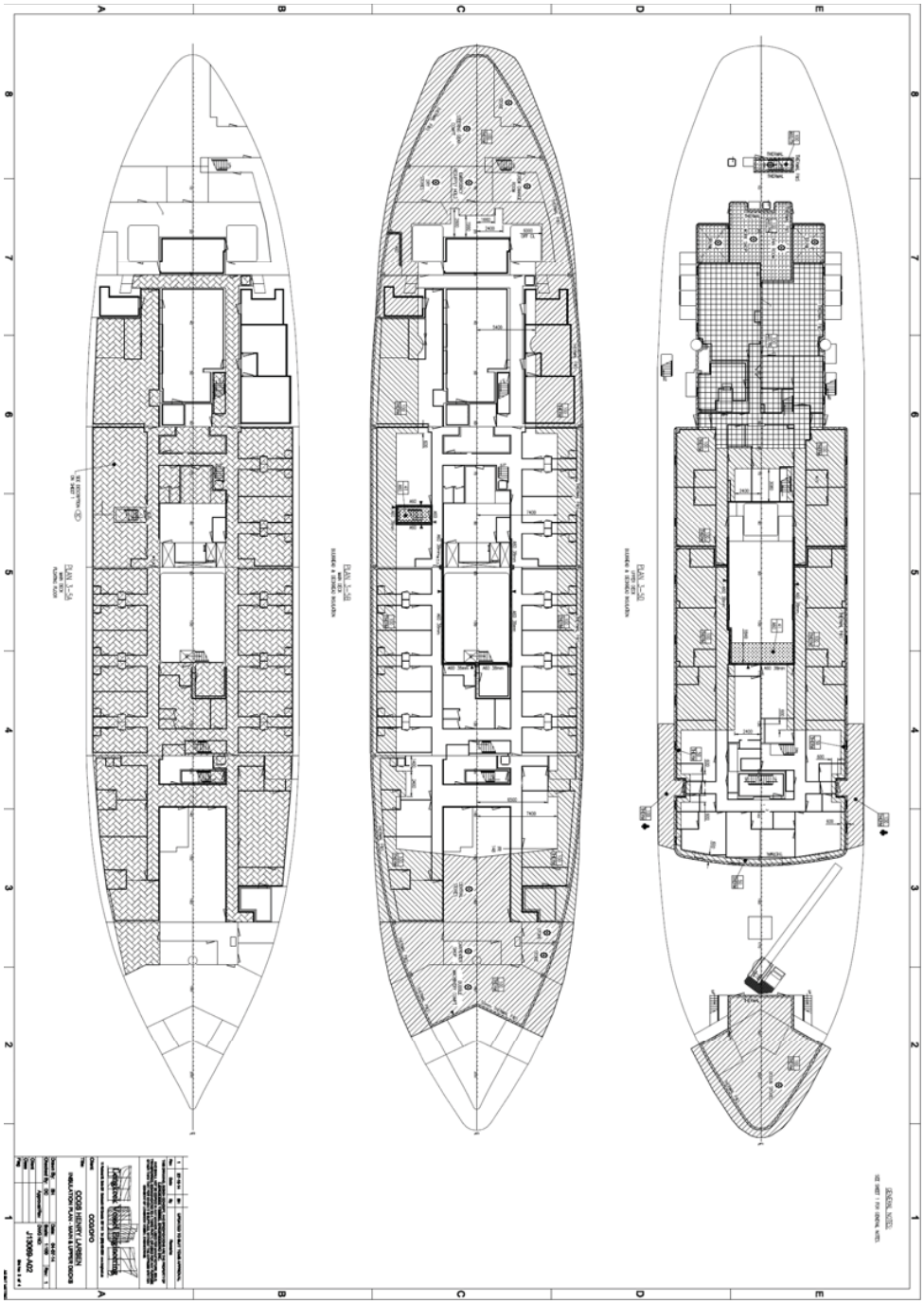

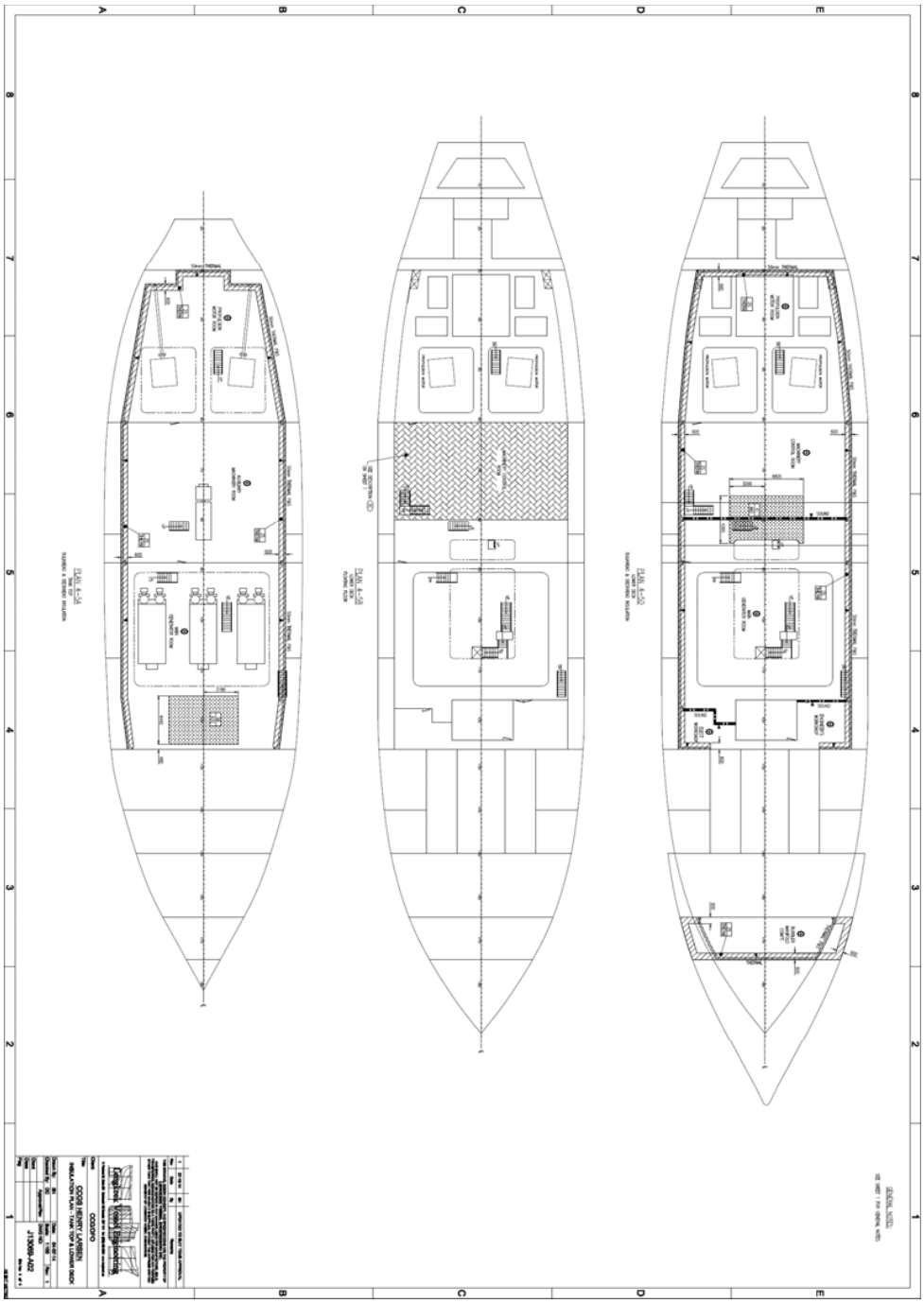

APPENDIX D GENERAL PIPING & GREY WATER

System Drawings and Details

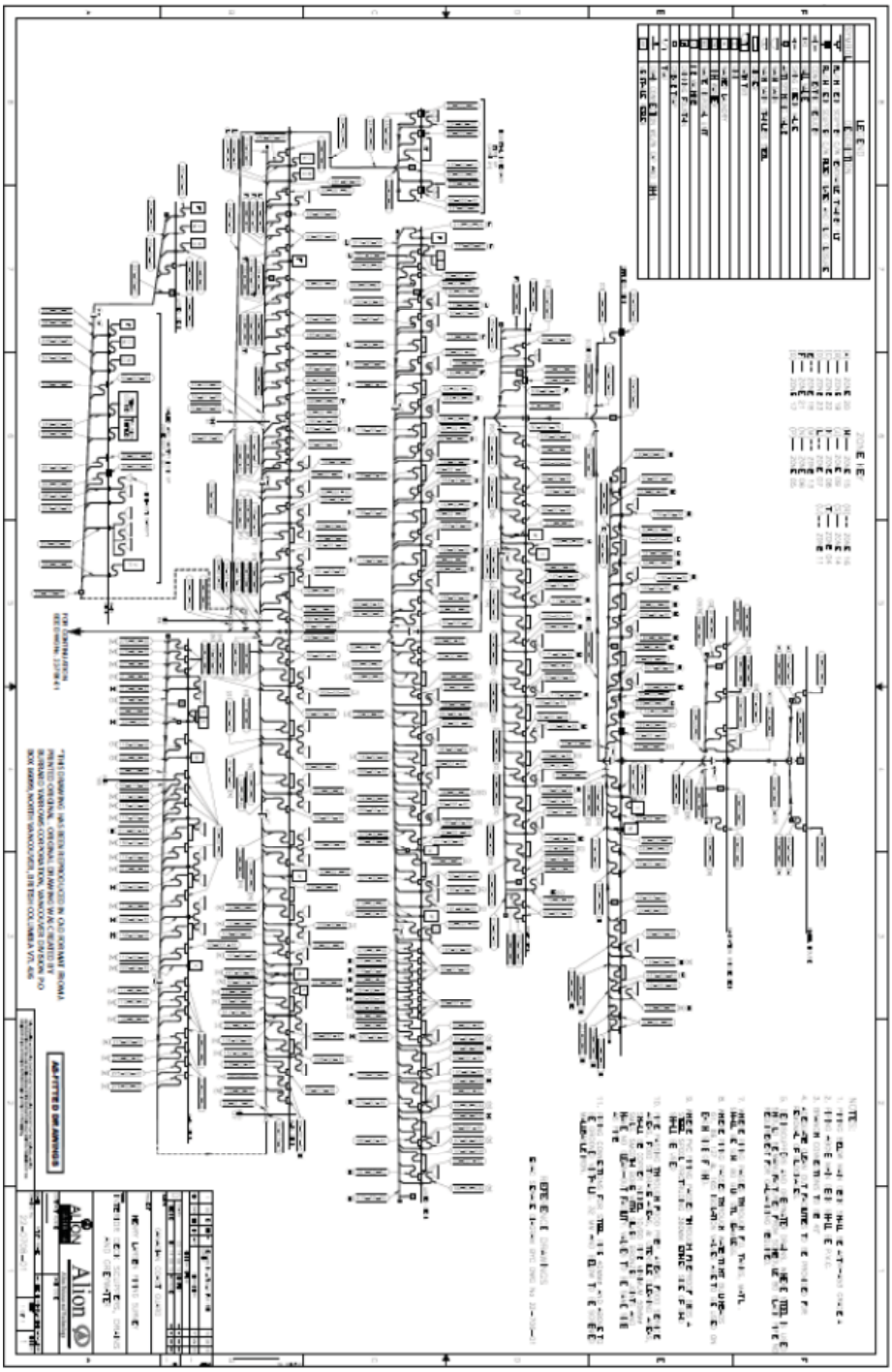

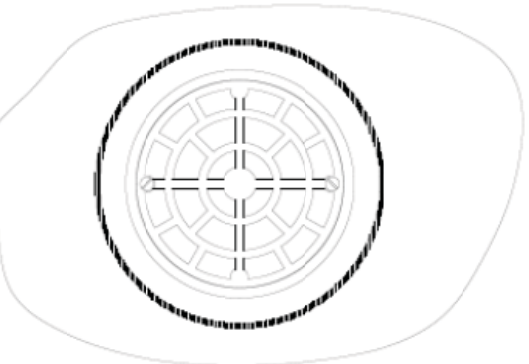

PLAN VIEW ON DECK SCUPPER

WACER DECK DRAIN SIZE CHART

WACER SIZE	DIMENSION A MAXIMUM OF WACER DECK DRAIN	DIMENSION B DEPTH OF DECK WACER DECK DRAIN	NOM DIA OF STAINLESS STEEL SCH 10 PIPE RING
1.5	4.875	3.875	6"
2	5.750	4.00	8"
2.5	6.875	4.625	8"
3	7.875	5.25	10"

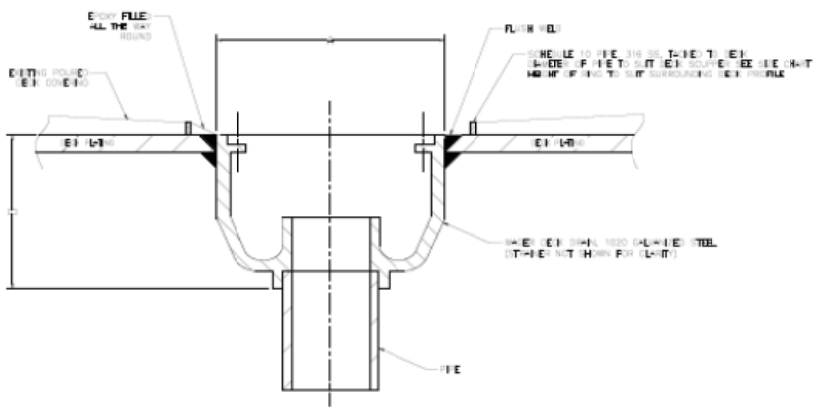

TYP. SECTION OF DECK SCUPPER

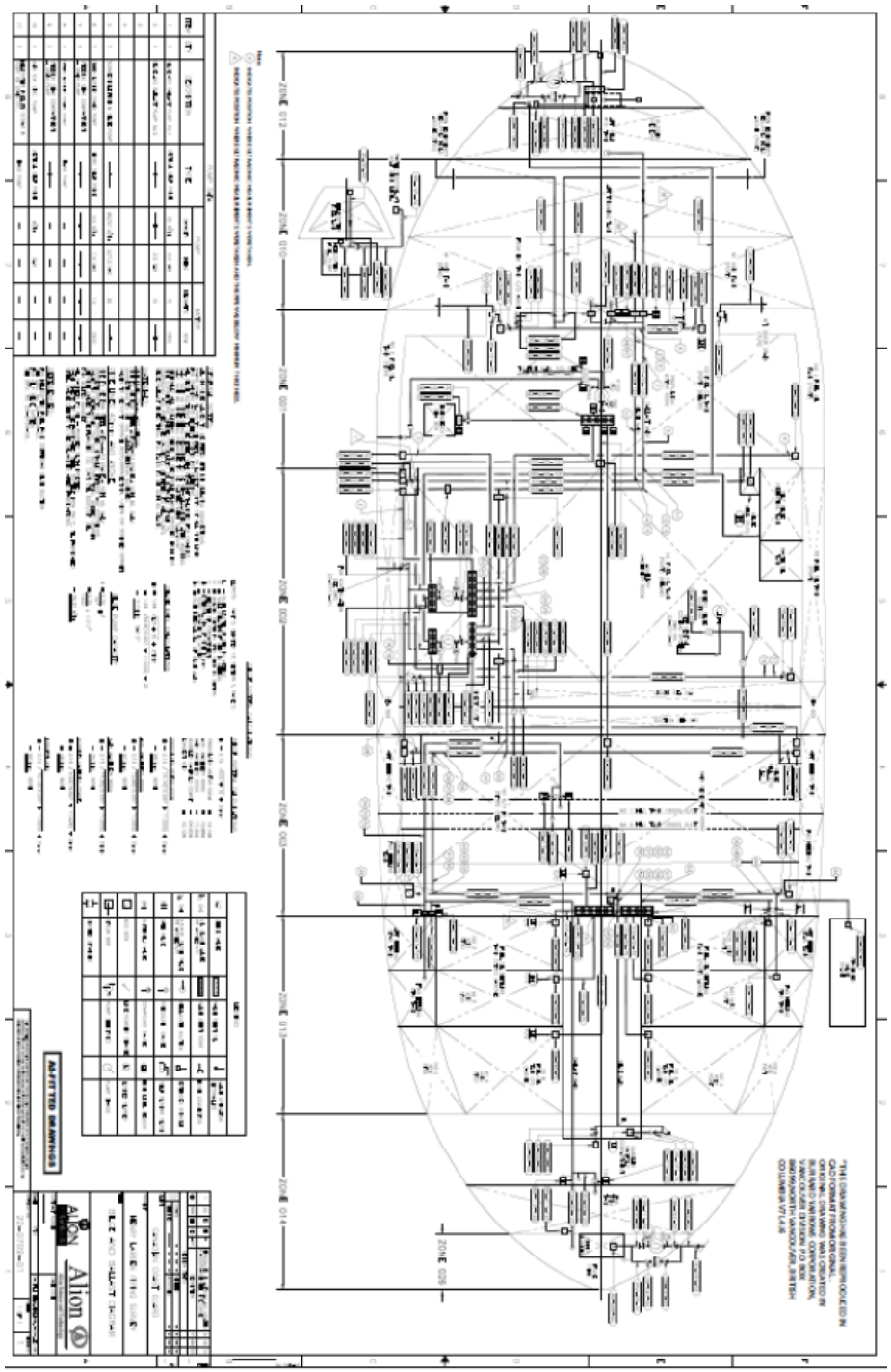

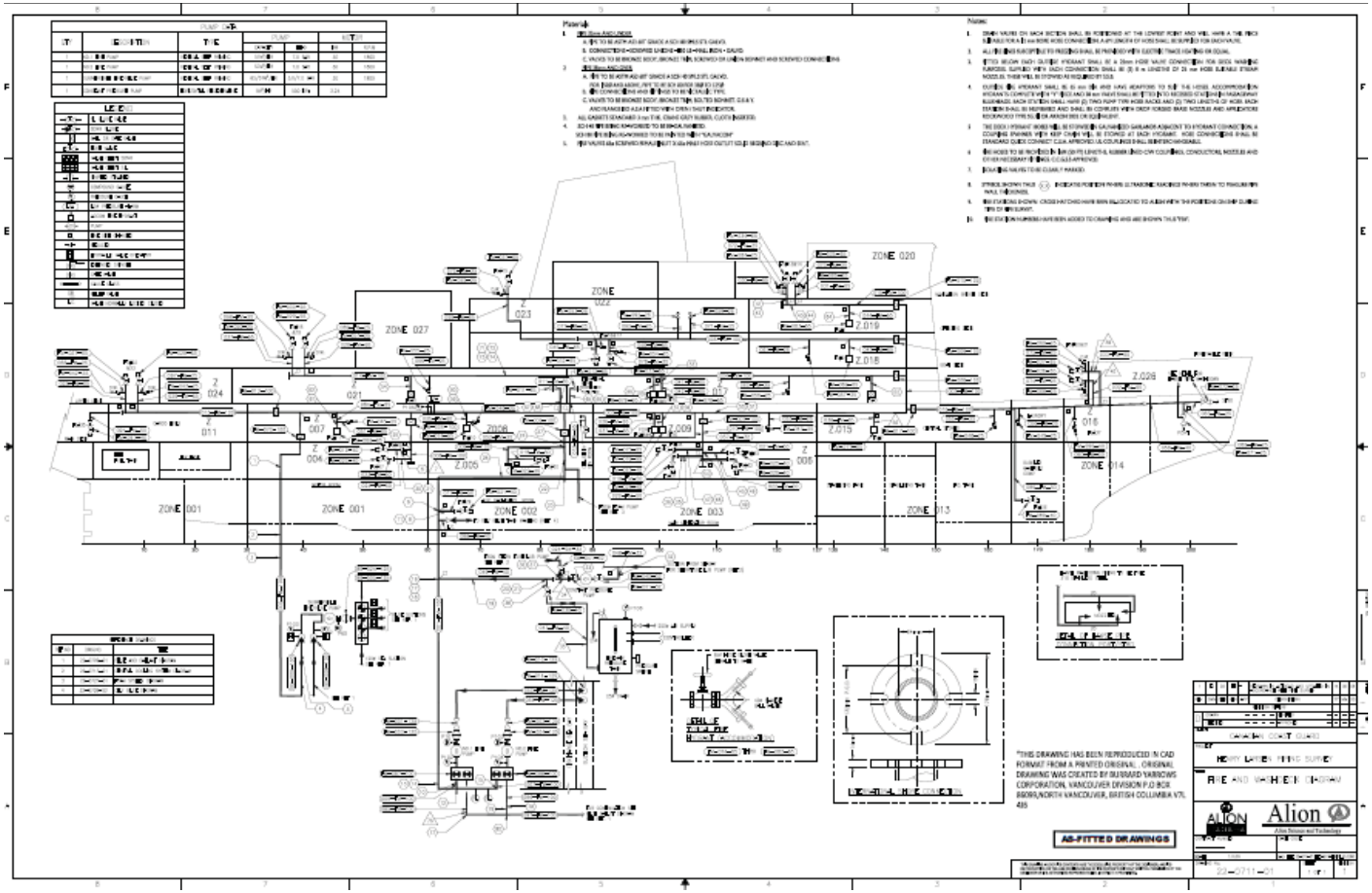
ZONE 020
ZONE 027
ZONE 022
ZONE 014
ZONE 001
ZONE 002
ZONE 003
ZONE 013
"THIS DRAWING HAS BEEN REPRODUCED IN CAD FORMAT FROM A PRINTED ORIGINAL. ORIGINAL DRAWING WAS CREATED BY BURRARD YARROWS CORPORATION, VANCOUVER DIVISION P.O BOX 86069,NORTH VANCOUVER, BRITISH COLUMBIA V7L 4J5
AS-FITTED DRAWINGS
Alion

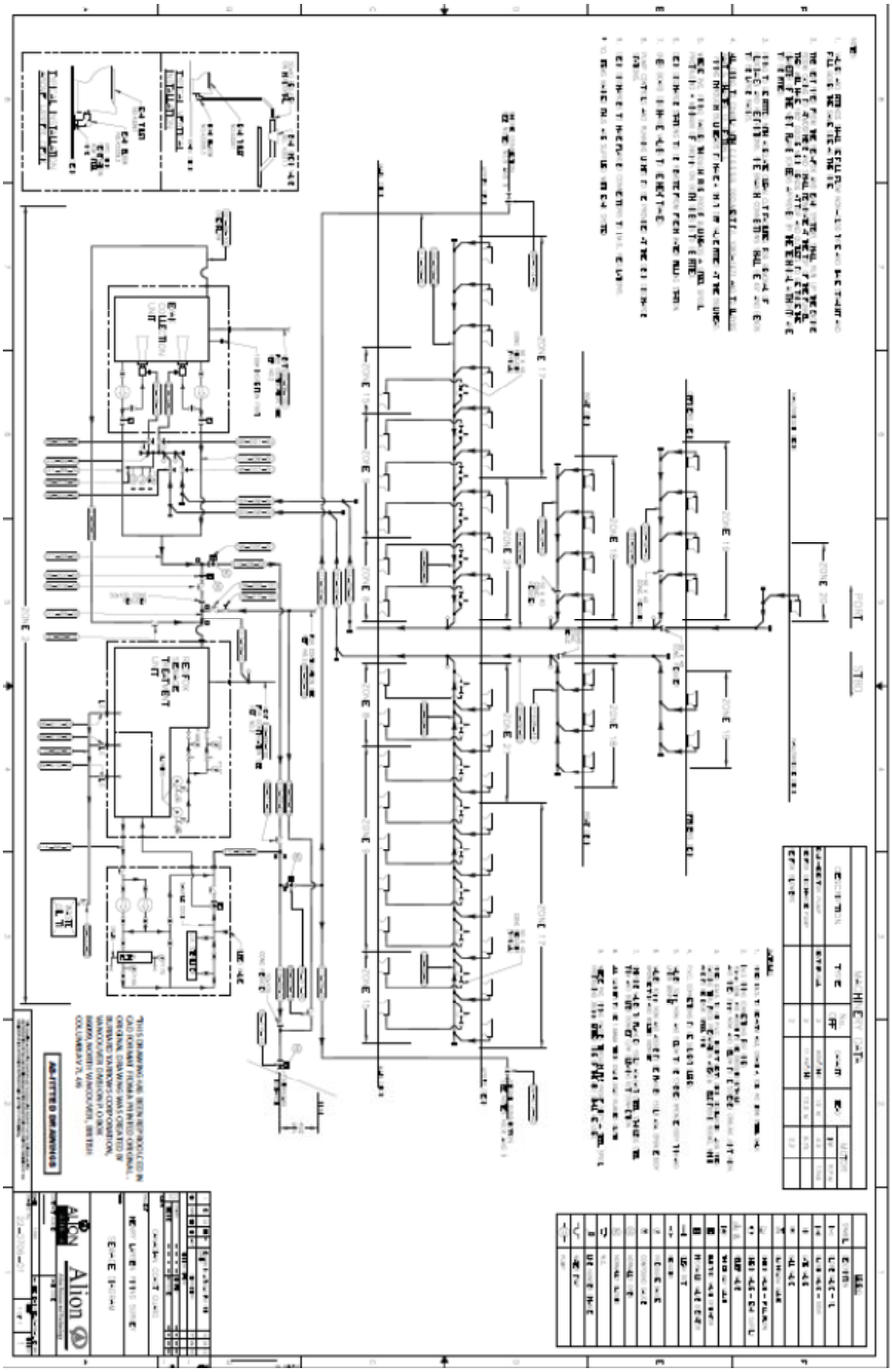

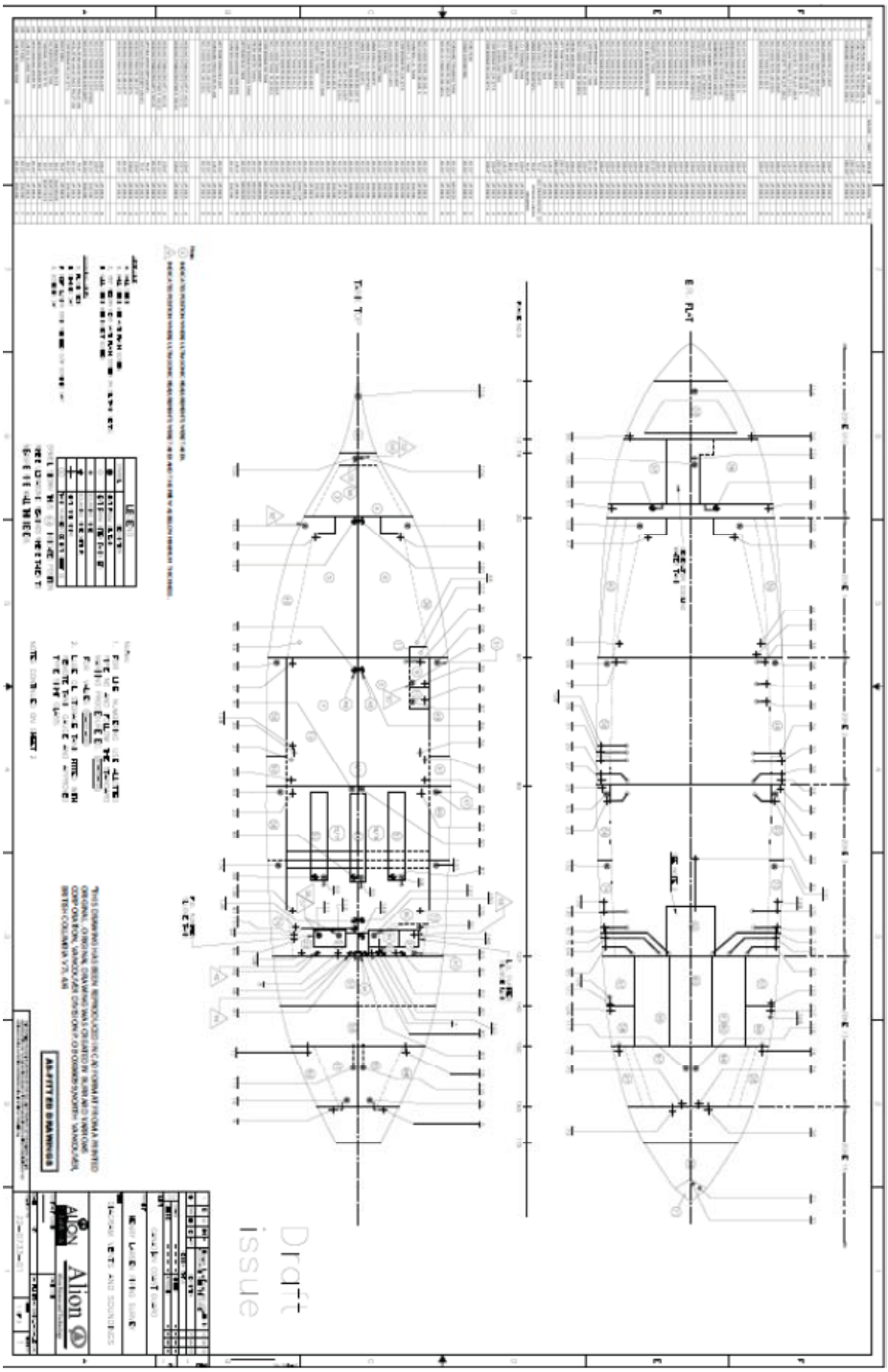
Draft
issue

Appendix E Work Breakdown

ASBESTOS REMEDIATION & RE-INSULATION

Deck/Compt. #	Compt. Name	Boundary Location	Removals	Interference Items	Remediation	Re-Insulation Type	Restoration
			(Remove & Re-Install)	(Remove & Re-Install)	(Remove and Dispose)	(See Remediation column for area)	(Misc. for Compmt.)
				Indicative List Only *	Estimated Area - m²		
Navigation Bridge Deck							
416	Wheelhouse	Deckhead	Ceiling Panels	Cable Trays, Wireways, Ventilation Ductwork, Lights	100.00	Thermal (100 thk)	Cleaning
				Deckhead Mounted Equipment, Curtains			Painting
		Fwd Bulkhead	Jnr Linings, Window Casings	Grab Rails, Helm Console, Heaters, Wipers	50.00	Thermal (100 thk)	Moulding Repair
							Flooring Repair
		Port Bulkhead	Jnr Linings, Window Casings	Grab Rails, Wipers	15.00	Thermal (100 thk)	
		Stbd Bulkhead	Jnr Linings, Window Casings	Grab Rails, Wipers	15.00	Thermal (100 thk)	
		Aft Bulkhead (Port)	Jnr Linings, Window Casings	Grab Rails, Desks, Bhd Mtd Shelves & Equip	15.00	Thermal (100 thk)	
			Joiner Linings	Furnishings, Fixtures, Wipers	6.00	A-60 (75 thk)	
		Aft Bulkhead (Stbd)	Jnr Linings, Window Casings	Grab Rails, Cabinets, Bhd Mtd Shelves, Nav Equip	18.00	Thermal (100 thk)	
				Furnishings, Fixtures, Fridge, Wipers			
405	Ice Services Specialist Office	Deckhead	Ceiling Panels	Heat Det., Smoke Det., Cable Trays, Wireways, Lights	23.00	Thermal (100 thk)	Cleaning
				Ventilation Ductwork			Painting
		Fwd Bulkhead	Joiner Linings	FM 200 Bottles & Piping	3.00	Thermal (100 thk)	Moulding Repair
							Flooring Repair
		Port Bulkhead	Joiner Linings	Filing Cabinets, Bookrack, Fixtures	17.00	Thermal (100 thk)	
		Aft Bulkhead	Joiner Linings	Desk, Bookcase	13.00	A-60 (75 thk)	
406	Electronics Room	Deckhead	Ceiling Panels	Smoke Det., Cable Trays, Wireways, Antenna Cables	29.00	Thermal (100 thk)	Cleaning
				Ventilation Ductwork, Lights			Painting
		Fwd Bulkhead	Joiner Linings	Searchlight Rectifiers, Shelves	3.00	Thermal (100 thk)	Moulding Repair
							Flooring Repair
		Inboard Bulkhead	Joiner Linings	Elect Panel, Fixtures	4.50	A-60 (75 thk)	
		Sect. of Aft Bhd	Joiner Linings	Workbench, Filing Cabinet, Shelving	6.00	A-60 (75 thk)	

		Em Coupler Compt Bhds	Joiner Linings	Locker, Filing Cabinet, Key Cabinet	9.00	A-60 (75 thk)	
		Stbd Bulkhead	Joiner Linings, Window Casing	Coms Consoles	21.00	Thermal (100 thk)	
404	Special Navigation Chart Room	Deckhead	Ceiling Panels	Heat Det., Smoke Det., Cable Trays, Wireways, Lights	35.00	Thermal(100 thk)	Cleaning
				Ventilation Ductwork	10.00	A-60 (50 thk)	Painting
		Port Bulkhead	Joiner Linings, Window Casing	Desk	18.00	Thermal (100 thk)	Moulding Repair
							Flooring Repair
		Aft Bulkhead	Joiner Linings	Filing Cabinets, Equip Racks, Desk	17.00	A-60 (75 thk)	
					6.00	Thermal (100 thk)	
403	I.C.S Room	Deckhead	Ceiling Panels	Smoke Det., Cable Trays, Wireways, Lights	11.00	Thermal (100 thk)	Cleaning
				Ventilation Ductwork			Painting
		Stbd Bulkhead	Joiner Linings	AC Unit, Telephone Comm Equip	14.00	Thermal (100 thk)	Moulding Repair
							Flooring Repair
		Fwd Bulkhead	Joiner Linings		8.00	A-60 (75 thk)	
		Inboard Bulkhead	Joiner Linings	ECP Panels	14.00	A-60 (75 thk)	
		Aft Bulkhead	Joiner Lngs, Esc Hatch Casing		8.00	Thermal (100 thk)	
407/410	Passageway	Deckhead	Ceiling Panels	Heat Det., Smoke Det., Wireways etc., Lights	20.70	Thermal (100 thk)	Cleaning
				Ventilation Ductwork			Painting
		Port Bulkhead	Joiner Linings		3.60	Thermal (100 thk)	Moulding Repair
							Flooring Repair
		Stbd Bulkhead	Joiner Linings		7.20	Thermal (100 thk)	
408	Emergency Coupler Compt	Outboard Bulkhead	Sheathing	Shelving	4.00	A-60 (75 thk)	Cleaning
		Deckhead	Sheathing	Smoke Det.	2.00	Thermal (100 thk)	Painting
409	Washroom	Deckhead	Ceiling Panels	Wireways etc., Lights	3.60	Thermal (100 thk)	Cleaning
							Painting
		Port Bulkhead	Joiner Linings		7.20	Thermal (100 thk)	Moulding Repair

414	Stair Tower	Deckhead	Ceiling Panels	Smoke Det., Wireways etc., Lights	7.70	Thermal (100 thk)	Cleaning
							Painting
		Stbd Bulkhead	Joiner Linings		3.60	Thermal (100 thk)	Moulding Repair
417	Main Coupler Compt	Outboard Bulkhead	Sheathing	Shelving	4.00	A-60 (75 thk)	Cleaning
		Deckhead	Sheathing	Smoke Det.	2.00	Thermal (100 thk)	Painting
Nav. Bridge Deck Total					**554.10**		
Officers Deck							
365	Laundry	Deckhead	Ceiling Panels	Heat Det., Light fixture, Ceiling Fan	7.00	A-60 (50 thk)	Cleaning, Painting
367	Communications Officer Cabin	Deckhead	Ceiling Panels	Smoke Det., Wireway, Fittings, Lights	9.00	A-60 (50 thk)	Cleaning
				Ventilation Ductwork			Painting
368	Washroom	Deckhead	Ceiling Panels	Smoke Det., Light Fixture, Fan	3.00	A-60 (50 thk)	Cleaning
							Painting
369	Lobby	Deckhead	Ceiling Panels	Smoke Det., Light Fixture	1.50	A-60 (50 thk)	Cleaning, Painting
370	Lobby	Deckhead	Ceiling Panels	Light Fixture	1.20	A-60 (50 thk)	Cleaning, Painting
371/372A /372B	Passageway	Deckhead	Ceiling Panels	Smoke Det., Wireways, Fixtures, Alarms etc.	16.00	A-60 (50 thk)	Cleaning
							Painting
373	Deck Office	Deckhead	Ceiling Panels	Smoke Det., Wireways , Light Fixture etc.	4.00	A-60 (50 thk)	Cleaning
				Ventilation Ductwork			Painting
374	Secure Locker	Deckhead	Ceiling Panels	Wireways, Fixtures, Alarms etc.	1.20	A-60 (50 thk)	Cleaning
							Painting
378/379	1st Officer's Cabin & WC	Deckhead	Ceiling Panels	Smoke Det., Wireways, Lights	5.50	A-60 (50 thk)	Cleaning
			Ceiling Panels	Fixtures	17.10	Thermal (100 thk)	Painting
380	Chief Officer's Bedroom	Deckhead	Ceiling Panels	Smoke Det., Wireway, Light Fixture	7.50	A-60 (50 thk)	Cleaning, Painting

381	Chief Officer's Dayroom	Deckhead	Ceiling Panels	Smoke Det., Wireway, Light Fixtures	23.00	A-60 (50 thk)	Cleaning
							Painting
382	Washroom	Deckhead	Ceiling Panels	Light Fixture, Ceiling Fan	4.00	A-60 (50 thk)	Cleaning
							Painting
383/384	Senior Scientist Cabin	Deckhead	Ceiling Panels	Smoke Det., Wireways, Fixtures	23.00	A-60 (50 thk)	Cleaning
	& Washroom			Ceiling Fan, Fixture			Painting
385/386	2nd Officer's Cabin & WC	Deckhead	Ceiling Panels	Smoke Det., Wireway, Light Fixtures, Ceiling Fan	17.10	Thermal (100 thk)	Cleaning
			Ceiling Panels		5.50	A-60 (50 thk)	Painting
387/388/389/390	Captain's Dayroom, Office	Deckhead	Ceiling Panels, Curtain & Rail	Smoke Det., Wireways, Fixtures, Ceiling Fan	50.00	A-60 (50 thk)	Cleaning
	Washroom & Bedroom				8.00	Thermal (100 thk)	Painting
Officers Deck Total					**196.60**		
Flight/Boat Deck							
332	Lobby	Deckhead	Ceiling Panel	Wireways, Light Fixtures	1.00	Thermal (100 thk)	Cleaning, Painting
333	Lobby	Deckhead	Ceiling Panels	Wireways, Light Fixtures	1.00	Thermal (100 thk)	Cleaning, Painting
339	1st Engineering	Deckhead	Ceiling Panels	Wireways, Light Fixtures	6.00	Thermal (100 thk)	Cleaning
							Painting
341	Helicopter Engineer	Deckhead	Joiner Linings, Window Casing	Wireways, Light Fixtures	2.00	Thermal (100 thk)	Cleaning, Painting
343	Helicopter Pilot	Deckhead	Ceiling Panels	Wireways, Light Fixtures	5.00	Thermal (100 thk)	Cleaning, Painting
344	Washroom	Deckhead	Ceiling Panels	Wireways, Light Fixtures	1.00	Thermal (100 thk)	Cleaning, Painting
345	2nd Engineer	Deckhead	Ceiling Panels	Wireways, Light Fixtures	6.00	Thermal (100 thk)	Cleaning, Painting
347	Chief Engineer's	Deckhead	Ceiling Panels	Wireways, Light Fixtures	3.00	Thermal (100 thk)	Cleaning, Painting

	Dayroom & Office						
349	Chief Engineer's Bedroom	Deckhead	Ceiling Panels	Wireways, Light Fixtures	2.50	Thermal (100 thk)	Cleaning, Painting
350	2 Senior Officials	Deckhead	Ceiling Panels	Wireways, Light Fixtures	1.70	Thermal (100 thk)	Cleaning, Painting
352	2 Persons	Deckhead	Ceiling Panels	Wireways, Light Fixtures	1.70	Thermal (100 thk)	Cleaning, Painting
354A	Passageway	Deckhead	Ceiling Panel	Wireways, Light Fixtures	1.00	Thermal (100 thk)	Cleaning, Painting
354B	Passageway	Deckhead	Ceiling Panel	Wireways, Light Fixtures	1.00	Thermal (100 thk)	Cleaning, Painting
Flight/Boat Deck Total					**32.90**		
Upper Deck							
274	Senior Engineer Dayroom	Deckhead	Ceiling Panels	Wireways, Light Fixtures	5.00	Thermal (100 thk)	Cleaning, Painting
276	Senior Engineer Bedroom	Deckhead	Ceiling Panels	Wireways, Light Fixtures	1.80	Thermal (100 thk)	Cleaning, Painting
293	Electrical Officer	Deckhead	Ceiling Panels	Wireways, Light Fixtures	2.00	Thermal (100 thk)	Cleaning, Painting
291	Senior Logistic Officer	Deckhead	Ceiling Panels	Wireways, Light Fixtures	4.00	Thermal (100 thk)	Cleaning, Painting
292	Senior Logistic Officer Washroom	Deckhead	Ceiling Panels	Wireways, Light Fixtures	1.00	Thermal (100 thk)	Cleaning, Painting
	Locker (Stbd)	Deckhead	Ceiling Panels	Wireways, Light Fixtures	0.90	Thermal (100 thk)	Cleaning, Painting
302	Lobby	Deckhead	Ceiling Panels	Wireways, Light Fixtures	0.90	Thermal (100 thk)	Cleaning, Painting
288	Assist. Logistic Officer Washroom	Deckhead	Ceiling Panels	Wireways, Light Fixtures	1.60	Thermal (100 thk)	Cleaning, Painting
287	Assistant Logistic Officer	Deckhead	Ceiling Panels	Wireways, Light Fixtures	1.50	Thermal (100 thk)	Cleaning, Painting
			Ceiling Panels		3.60	Thermal (100 thk)	
	Locker (Port)	Deckhead	Ceiling Panels	Wireways, Light Fixtures	0.90	Thermal (100 thk)	Cleaning, Painting

301	Lobby	Deckhead	Ceiling Panels	Wireways, Light Fixtures	0.90	Thermal (100 thk)	Cleaning, Painting
285/286	Bosun Cabin & Washroom	Deckhead	Ceiling Panels	Light Fixtures, Smoke Det., Wireways, Piping , Ductwork	19.80	Thermal (100 thk)	Cleaning, Painting
283/284	2 Cadet Cabin & Washroom	Deckhead	Ceiling Panels	Light Fixtures, Smoke Det., Wireways, Piping , Ductwork	19.80	Thermal (100 thk)	Cleaning, Painting
281/282	2 Cadet Cabin & Washroom	Deckhead	Ceiling Panels	Light Fixtures, Smoke Det., Wireways, Piping , Ductwork	18.70	Thermal (100 thk)	Cleaning, Painting
279/280	2 Cadet Cabin & Washroom	Deckhead	Ceiling Panels	Light Fixtures, Smoke Det., Wireways, Piping , Ductwork	19.80	Thermal (100 thk)	Cleaning, Painting
278	2 Cadet Cabin Washroom	Deckhead	Ceiling Panels	Light Fixtures, Wireways, Piping , Ductwork	3.20	Thermal (100 thk)	Cleaning, Painting
271	Smoking Room Washroom	Deckhead	Ceiling Panels	Light Fixtures, Wireways, Piping , Ductwork	1.60	Thermal (100 thk)	Cleaning, Painting
270	Smoking Room	Deckhead	Ceiling Panels	Light Fixtures, Wireways, Piping , Ductwork	1.50	Thermal (100 thk)	Cleaning, Painting
			Ceiling Panels		3.60	Thermal (100 thk)	
268/269	Supernumerary Cabin & Washroom	Deckhead	Ceiling Panels	Light Fixtures, Smoke Det., Wireways, Piping , Ductwork	19.80	Thermal (100 thk)	Cleaning, Painting
264/265	2nd Elect. Officer Cabin	Deckhead	Ceiling Panels	Light Fixtures, Smoke Det., Wireways, Piping , Ductwork	18.70	Thermal (100 thk)	Cleaning, Painting
	& Washroom						
299	Passageway	Deckhead	Ceiling Panels	Light Fixtures, Smoke Det., Wireways, Piping , Ductwork	18.00	Thermal (100 thk)	Cleaning, Painting
298	Passageway	Deckhead	Ceiling Panels	Light Fixtures, Smoke Det., Wireways, Piping , Ductwork	12.25	Thermal (100 thk)	Cleaning, Painting
		Deckhead	Ceiling Panels		5.25	A-60 & Thermal (100 thk)	Painting
297	Passageway	Deckhead	Ceiling Panels	Light Fixtures, Smoke Det., Wireways, Piping , Ductwork	18.00	Thermal (100 thk)	Cleaning, Painting
296	Passageway	Deckhead	Ceiling Panels	Light Fixtures, Smoke Det., Wireway	12.25	Thermal (100 thk)	Cleaning
		Deckhead	Ceiling Panels		5.25	A-60 & Thermal (100 thk)	Painting
249	Engineer's	Deckhead	Ceiling	Wireways, Piping ,	2.50	Thermal	Cleaning,

	Office		Panels	Ductwork		(100 thk)	Painting
252	Laundry	Deckhead	Ceiling Panels	Wireways, Piping , Ductwork	0.50	Thermal (100 thk)	Cleaning, Painting
250	Lobby	Deckhead	Ceiling Panels	Wireways, Piping , Ductwork	0.60	Thermal (100 thk)	Cleaning, Painting
251	Eng. Off. Change Room	Deckhead	Ceiling Panels	Wireways, Piping , Ductwork	2.40	Thermal (100 thk)	Cleaning, Painting
242/243/244	Offices & Washroom	Deckhead	Ceiling Panels	Light Fixtures, Smoke Det., Wireways, Piping , Ductwork	12.00	Thermal (100 thk)	Cleaning, Painting
			Ceiling Panels		1.50	Thermal (100 thk)	
			Ceiling Panels		6.00	A-60 & Thermal (100 thk)	
240	Lobby (Port)	Deckhead	Ceiling Panels	Light Fixtures	1.50	A-60 & Thermal (100 thk)	Cleaning, Painting
241	Lobby (Stbd)	Deckhead	Ceiling Panels	Light Fixtures	1.50	A-60 & Thermal (100 thk)	Cleaning, Painting
228	Dispensary	Deckhead	Ceiling Panels	Smoke Det., Wireways , Light Fixture etc.	15.00	A-60 & Thermal (100 thk)	Cleaning, Painting
295	Passageway	Deckhead	Ceiling Panels	Light Fixtures, Smoke Det., Wireway	6.00	A-60 & Thermal (100 thk)	Cleaning
	(over stairs fr. 56)	Deckhead	Ceiling Panels		2.20	A-60 & Thermal (100 thk)	Painting
231/232/233/234	Off's Galley/Lockers	Deckhead	Ceiling Panels	Light Fixtures, Heat Det., Smoke Det., Ductwork	20.50	A-60 & Thermal (100 thk)	Cleaning, Painting
235	Passageway	Deckhead	Ceiling Panels	Light Fixtures, Smoke Det., Wireway	7.20	A-60 & Thermal (100 thk)	Cleaning
229/230	Ward & Washroom	Deckhead	Ceiling Panels	Light Fixtures, Smoke Det.	16.00	A-60 &Thermal (100 thk)	Cleaning
225	Officer's Lounge	Deckhead	Ceiling Panels	Light Fixtures, Heat Det., Wireways	45.40	A-60 & Thermal (100 thk)	Cleaning
				Ductwork and diffusers			Painting
226	Officer's Mess	Deckhead	Ceiling Panels	Light Fixtures, Ductwork and diffusers	43.70	A-60 & Thermal (100 thk)	Cleaning
				Heat Det., Wireways			Painting

Upper Deck Total					**406.10**		
Main Deck							
117	Crew's Cafeteria	Deckhead	Ceiling Panels	Heat Det., Wireway, Light Fixtures	40.00	Thermal (100 thk)	Cleaning
							Painting
130	Chief Cook	Deckhead	Ceiling Panels	Smoke Det., Light Fixture	6.00	Thermal (100 thk)	Cleaning
							Painting
131	Second Cook	Deckhead	Ceiling Panels	Smoke Det., Light Fixture	6.00	Thermal (100 thk)	Cleaning
							Painting
132	Steward	Deckhead	Ceiling Panels	Smoke Det., Light Fixture	6.00	Thermal (100 thk)	Cleaning
							Painting
133	Steward	Deckhead	Ceiling Panels	Smoke Det., Light Fixture	6.00	Thermal (100 thk)	Cleaning
							Painting
134	Crew & P/O's Lounge	Deckhead	Ceiling Panels	Heat Det., Light Fixtures, Wireway	30.00	Thermal (100 thk)	Cleaning
							Painting
		Stairway Deckhead	Sheathing		4.00	A-60 (50 thk)	
142	Washroom	Deckhead	Ceiling Panels	Light Fixture	4.00	Thermal (100 thk)	Cleaning
							Painting
143	Washroom	Deckhead	Ceiling Panels	Light Fixture	4.00	Thermal (100 thk)	Cleaning
							Painting
157	Storekeeper	Deckhead	Ceiling Panels	Smoke Det., Light Fixture	6.00	Thermal (100 thk)	Cleaning
							Painting
158	Spare	Deckhead	Ceiling Panels	Smoke Det., Light Fixture	6.00	Thermal (100 thk)	Cleaning
							Painting
159	Leading Seaman	Deckhead	Ceiling Panels	Smoke Det., Light Fixture	6.00	Thermal (100 thk)	Cleaning
							Painting
160	Leading Seaman	Deckhead	Ceiling Panels	Smoke Det., Light Fixture	6.00	Thermal (100 thk)	Cleaning

							Painting
161	Leading Seaman	Deckhead	Ceiling Panels	Smoke Det., Light Fixture	6.00	Thermal (100 thk)	Cleaning
							Painting
162	Leading Seaman	Deckhead	Ceiling Panels	Smoke Det., Light Fixture	6.00	Thermal (100 thk)	Cleaning
							Painting
163	Seaman	Deckhead	Ceiling Panels	Smoke Det., Light Fixture	6.00	Thermal (100 thk)	Cleaning
							Painting
164	Seaman	Deckhead	Ceiling Panels	Smoke Det., Light Fixture	6.00	Thermal (100 thk)	Cleaning
							Painting
165	Seaman	Deckhead	Ceiling Panels	Smoke Det., Light Fixture	6.00	Thermal (100 thk)	Cleaning
							Painting
166	Seaman	Deckhead	Ceiling Panels	Smoke Det., Light Fixture	6.00	Thermal (100 thk)	Cleaning
							Painting
167	Oiler	Deckhead	Ceiling Panels	Smoke Det., Light Fixture	6.00	Thermal (100 thk)	Cleaning
							Painting
168	Oiler	Deckhead	Ceiling Panels	Smoke Det., Light Fixture	6.00	Thermal (100 thk)	Cleaning
							Painting
170	Washroom	Deckhead	Ceiling Panels	Light Fixture	4.00	Thermal (100 thk)	Cleaning
							Painting
171	Washroom	Deckhead	Ceiling Panels	Light Fixture	4.00	Thermal (100 thk)	Cleaning
							Painting
172	Washroom	Deckhead	Ceiling Panels	Light Fixture	4.00	Thermal (100 thk)	Cleaning
							Painting
173	Washroom	Deckhead	Ceiling Panels	Light Fixture	4.00	Thermal (100 thk)	Cleaning
							Painting
174	Washroom	Deckhead	Ceiling Panels	Light Fixture	4.00	Thermal (100 thk)	Cleaning
							Painting

175	Washroom	Deckhead	Ceiling Panels	Light Fixture	4.00	Thermal (100 thk)	Cleaning
							Painting
181	Canteen Stores	Deckhead	Ceiling Panels	Smoke Det., Light Fixture	6.00	Thermal (100 thk)	Cleaning
							Painting
182	Gymnasium Locker	Deckhead	Ceiling Panels		2.50	Thermal (100 thk)	Cleaning
							Painting
183	Gymnasium	Deckhead	Ceiling Panels	Smoke Det., Light Fixtures, Ventilation, Piping	36.00	Thermal (100 thk)	Cleaning
							Painting
184	Change Room	Deckhead	Ceiling Panels	Light Fixtures	9.00	Thermal (100 thk)	Cleaning
							Painting
185	Sauna	Deckhead	Sauna Wood Ceiling		12.00	Thermal (100 thk)	Cleaning
							Painting
190	Oiler	Deckhead	Ceiling Panels	Smoke Det., Light Fixture	9.00	Thermal (100 thk)	Cleaning
							Painting
191	E/R Technician	Deckhead	Ceiling Panels	Smoke Det., Light Fixture	5.00	Thermal (100 thk)	Cleaning
							Painting
192	E/R Technician	Deckhead	Ceiling Panels	Smoke Det., Light Fixture	17.00	Thermal (100 thk)	Cleaning
							Painting
193	E/R Technician	Deckhead	Ceiling Panels	Smoke Det., Light Fixture	21.00	Thermal (100 thk)	Cleaning
							Painting
194	Washroom	Deckhead	Ceiling Panels	Light Fixture	4.40	Thermal (100 thk)	Cleaning
							Painting
195	Washroom	Deckhead	Ceiling Panels	Light Fixture	4.40	Thermal (100 thk)	Cleaning
							Painting
196A	Passageway (P)	Deckhead	Ceiling Panels	Smoke Det., Light Fixtures	9.20	Thermal (100 thk)	Cleaning
							Painting
196B	Passageway (S)	Deckhead	Ceiling Panels	Smoke Det., Light Fixtures	3.10	Thermal (100 thk)	Cleaning

							Painting
Main Deck Total					**340.60**		
Total					**1530**		
Notes:							
* - The indicative list of Interference Items is provided only as an estimate of what items may be encountered at each boundry location.							
Some items such as cable trays, wiring and ducting can be worked around while others will need to be removed and reinstalled.							
Contractors shall determine this for themselves during pre-bidders survey.							

Appendix F Lighting List

Cabin/Space	4 foot lights	2 foot lights
Bridge	9	2
Bridge Washroom		1
Radar Space		1
Radio Room/405	2	
Chart Room/404	6	
ICS Room/403	2	
Electronic Equipment room	4	
Bridge Deck		2
Captain/389	5	1
Chief Mate/381	1	4
Senior Scientist/383	1	3
First Officer/378		4
Second Officer/385		4
Supernumerary /367		4
Laundry/365		1
Office/373	1	
Entrance stbd		1
Lockers		2
First Engineer/339	1	2
Helicopter Engineer/341	1	2
Helicopter Pilot/343	1	2
Officials/352	1	2
Senior Officials/350	1	2
Cabin/Space	4 foot lights	2 foot lights
Chief Engineer/347	2	5
Second Engineer/345	1	2
Locker/337		1
SAR Locker		1
Entrance/Port		1
Senior Engineer/274	3	1
VMM Engineer/293		3
Electronics Tech/291		3
Locker/289		1
QM/ Station 290		1
Locker/ 257		1
Logistics Officer/287	1	2
Bosun/285	1	2
Cadets/283	1	2
Cadets/281	1	2
Cadets/279	1	2
Cadets/277	1	2
Log Office/244	2	
Log Office/ 242A	3	
Locker/234		1
Officer’s Pantry/231	2	1
Officer’s Mess/226	6	

Officer's Lounge/225	5	
Cabin/Space	4 foot lights	2 foot lights
Washroom		1
Hospital/228A	4	
Medical Officer/ 260	1	2
Ice Observer/262	1	2
Junior Electrical Officer/264	1	2
Senior Electrical Officer/266	1	2
Spare Cabin/268	1	2
Smoke Room/270	1	2
QM Station/272		1
Locker/ 254		1
Laundry/ 252		2
Eng off and change room/249	2	6
Locker/ 273		1
Locker/256		1
Entrances		4
ER Tech/193	2	
ER Tech/192	2	
Er/Tech 191	2	
Oiler/190	2	
Oiler/168	1	1
Oiler/167	1	
Deck/166	1	1
Deck/165	1	
Cabin/Space	4 foot lights	2 foot lights
Deck/164	1	1
Deck/163	1	
Lounge/134B	2	
Lounge /134A	5	
Crew's Mess	8	1
Galley	7	1
Chief Cook/130	1	1
Second Cook/131	1	
Steward/132	1	1
Steward/133	1	
Storekeeper/157	1	1
Spare/158	1	
Deck/159	1	1
Deck/160	1	
Deck/161	1	1
Deck/162	1	
Canteen		2
Gym	5	2
Engineroom change room/152B	2	2
Engine Electronic WS/151	1	
Laundry/153		1

Stairs		3
Control Room	15	
Total	148	123
Alleyway Lights	1x 40W light fixtures	91

Appendix G Hanger Deck Renewal

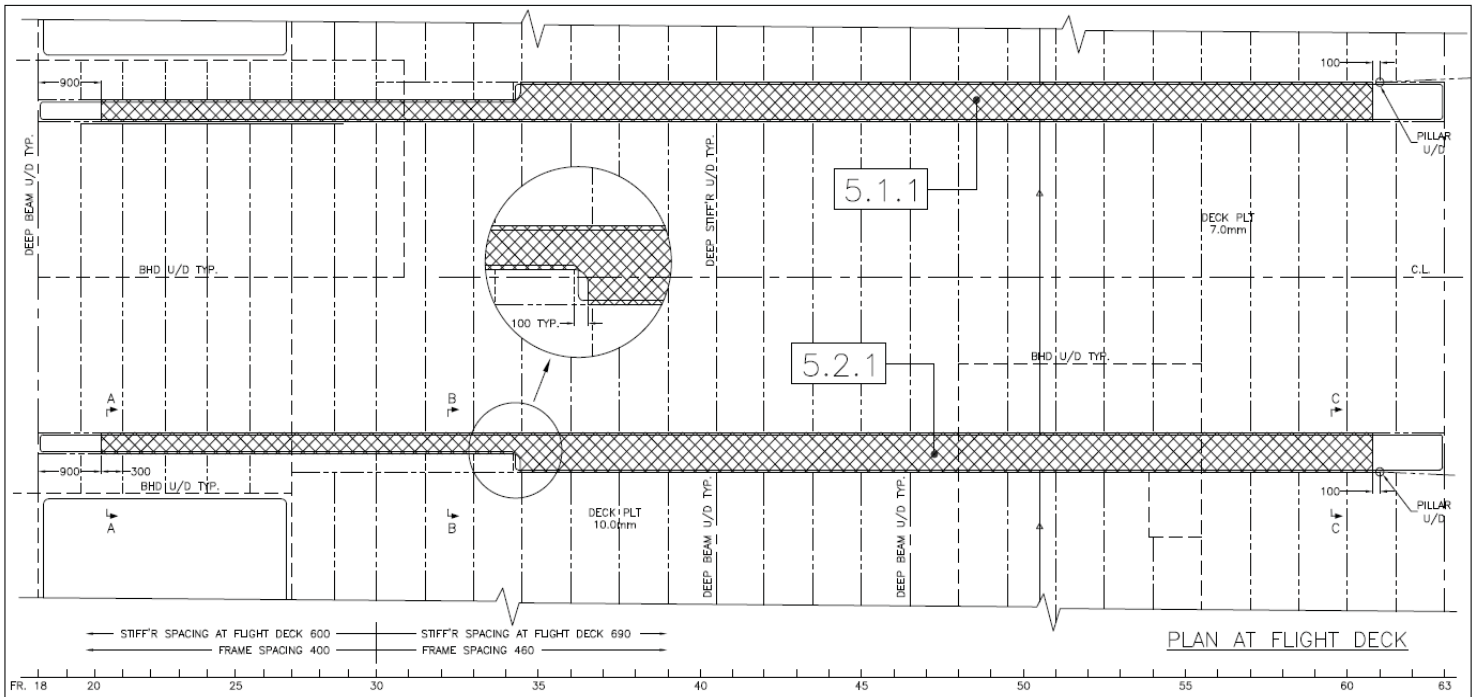

PLAN AT FLIGHT DECK

NOTES:

1. AS-FITTED MATERIALS AND WELDING TO BE COMPLETED TO THE SATISFACTION OF TCMS SURVEYORS.
2. ALL DIMENSIONS IN MILLIMETERS UNLESS NOTED OTHERWISE. ALL DIMENSIONS TO BE CHECKED AGAINST VESSEL PRIOR TO COMMENCEMENT OF WORK.
3. ALL NEW STEEL TO BE LLOYD'S REGISTER GRADE 'A' OR APPROVED EQUIVALENT BY TCMS ATTENDING SURVEYOR. NEW STEEL TO BE BLASTED AND PRIMED.
4. ALL HOT WORK TO BE EXECUTED IN ACCORDANCE WITH CSA W59 AND CSA W47.1., USING E-7018 (OR APPROVED EQUIVALENT) ELECTRODES. ALL WELDING TO BE DOUBLE CONTINUOUS, 6mm LEG LENGTH, UNLESS NOTED OTHERWISE.
5. NDT SHALL BE AS FOLLOWS, SUBJECT TO REQUIREMENTS OF ATTENDING SURVEYOR:
   - ALL WELDS 100% VISUAL EXAMINATION.
   - FILLET WELDS ABOVE DECK 100% MPI / FULL PENETRATION WELDS 100% UT.
6. ALL NEW STEEL TO BE COATED IAW OWNER'S PAINT SCHEME. AFFECTED AREAS OF EXISTING STEEL TO BE RESTORED TO ORIGINAL CONDITION.

ABBREVIATIONS:

BHD – BULKHEAD
TYP. – TYPICAL DETAIL OR DIMENSION
U/D – UNDER DECK
U.N.O – UNLESS NOTED OTHERWISE

REFERENCE SPECIFICATION:

PMC DOC. NO. 14-198-001 REV 1

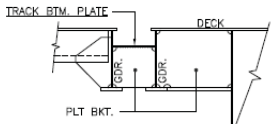

SECTION A-A
IWO FRAME 21
SCALE 1:25
P & S

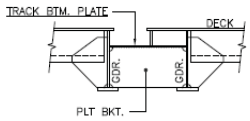

SECTION B-B
IWO FRAME 33
SCALE 1:25
P & S

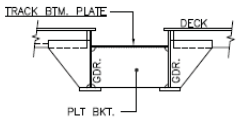

SECTION C-C
IWO FRAME 60
SCALE 1:25
P & S

Poseidon marine consultants limited

391 STAVANGER DRIVE
ST. JOHN'S, NL, CANADA
A1A 0A1

PH: (709) 739-4321
FAX: (709) 739-4421
www.poseidonmarine.nf.ca

TITLE:

CCGS HENRY LARSEN

STEEL RENEWAL IWO HELICOPTER HANGAR TRACK BOTTOM PLATING

PROJECT NO.: 14-198	REV: 1
DWG. NO.: 14-198-100	
SCALE/SIZE: 1:50 U.N.O / 11x17	
SHEET: 1 OF 1	DATE: 2014-12-19

Visual Inspections
Radiography & Ultrasonics
Mag & Penetrant Inspections
Eddy Current Testing
Structural Steel & Torque

Eastern Technical Services Ltd
PO Box 13517, St. John's, NL., A1B 4B8
709-726-4622 27 Austin St. Fax 726-4626

Technical Reports
Engineering Studies
Gas Free Testing
Destructive Testing
Insurance Reports

Ultrasonic Report

ETS No.:	14-725	Copy:	
Date:	8 December 2014	Date Received:	8 December 2014
Client:	D.F.O. Can. Coast Guard Directorate, P.O.Box 5667, St. John's, NL., A1C 5X1	Inspected by:	C. Purcell, B.Sc. Chem., C.N.S.C., C.E.D.O., ASNT TC-1A RT, UT, ET, MT, PT level II. CAN/CGSB 48.9712 MT level II, ET,UT level I.
Attn:	Mr. Dean Clarke (dean.clarke@dfo-mpo.gc.ca, DFOinvoicing-MPOfacturation@dfo-mpo.gc.ca)	Inspected by:	
P.O. No.:			
Project:	C.C.G.S. Henry Larsen	Signed:	Fred O'K[illegible]
Testing Required:	Ultrasonic Thickness Inspection		N.D.E. Supervisor

Remarks

As directed, our technicians performed ultrasonic thickness readings on the Hangar Track plating for the above noted vessel. Results are shown on the attached sketches. Original thickness for the hangar track is 9.5mm(3/8").

Equipment Used
Krautkramer DMS 2 digital thickness gauge (S/N 00MMRRF).
Krautkramer TC560 probe (S/N 00M581).
Various steel calibration blocks (0.100 to 0.500 " step wedge).
Sonotech Echogel 20 couplant.

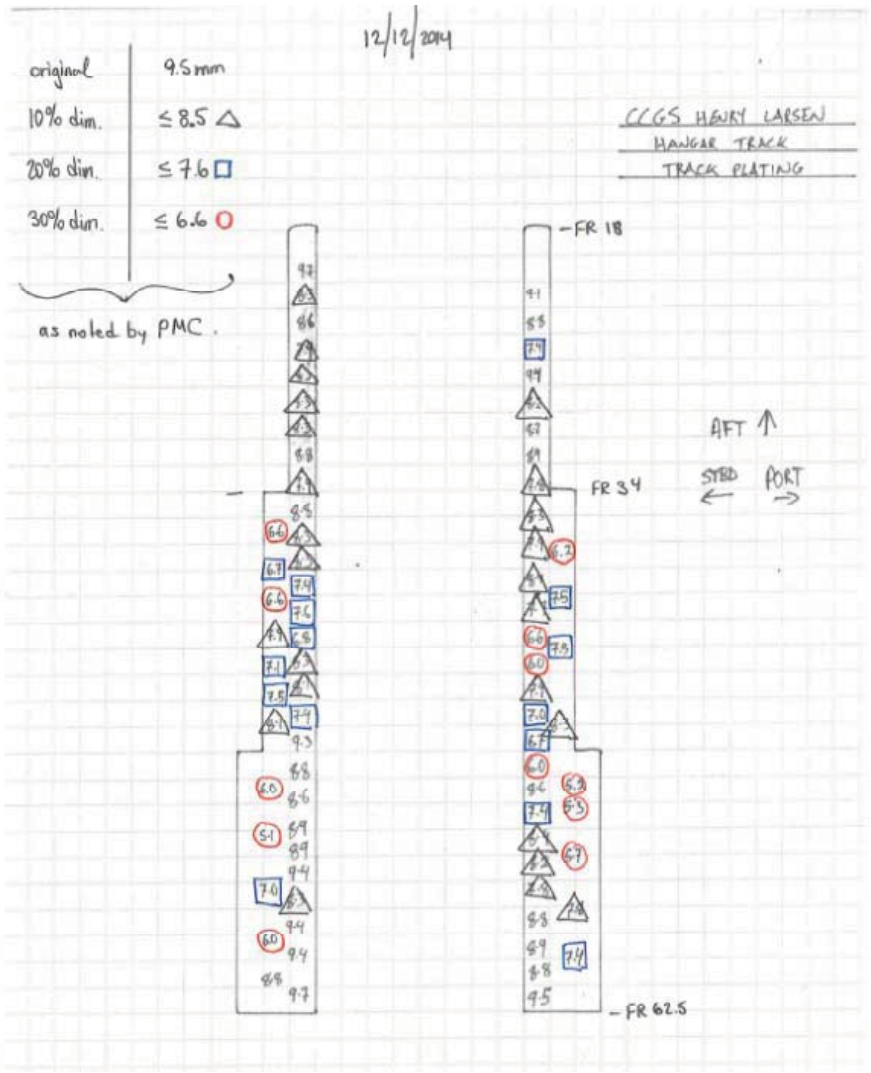
12/12/2014
original 9.5 mm
10% dim. ≤ 8.5
20% dim. ≤ 7.6
30% dim. ≤ 6.6
as noted by PMC.
CCGS HENRY LARSEN
HANGAR TRACK
TRACK PLATING
FR 18
FR 34
FR 62.5
AFT
STBD
PORT

APPENDIX J Asbestos

Contractor Notification and Acknowledgement Form

CONTRACTOR NOTIFICATION AND ACKNOWLEDGEMENT FORM

WORKING WITH ASBESTOS CAN BE DANGEROUS. INHALING ASBESTOS FIBRES CAN CAUSE VARIOUS TYPES OF LUNG DISEASE INCLUDING CANCER. SMOKING INCREASES THE RISK OF LUNG CANCER FROM ASBESTOS EXPOSURE.

CCG has identified the presence of various non-friable asbestos materials in the CCGS Henry Larsen. An asbestos inventory report showing the locations and amounts of these materials is available for viewing from the **AC OR THEIR DESIGNATE**.

The Newfoundland Asbestos Regulation 111/98 applies to all maintenance and renovation work that may disturb asbestos materials. Contractors who have received training in asbestos-related precautions shall only undertake the disturbance of asbestos vessel materials. The following activities may disturb friable asbestos materials (All classifications of work). The **AC OR THEIR DESIGNATE** must be notified prior to performing the following:

- Ceiling entry which may disturb asbestos;
- Any other operation that may generate airborne asbestos.

There are also non-friable asbestos materials in the vessels, including gaskets and packings, etc.

As a condition of our contract to provide services and materials, this company will not disturb asbestos-containing materials without prior notification to the **AC OR THEIR DESIGNATE**. This firm and its workers, will follow all procedures specified by CCG and/or the applicable provincial/federal regulation. All asbestos waste will be packaged and disposed of in accordance with Ministry of the Environment requirements.

COMPANY NAME: _____

SIGNATURE: _____ DATE: _____

NAME AND TITLE: _____

Appendix K Steering Gear Drawings

CONDITION	ISOLATION VALVE POSITIONS			
	4A	4B	5A	5B
NORMAL	OPEN	OPEN	CLOSED	CLOSED
UNIT 1 FAILURE	CLOSED	OPEN	OPEN	CLOSED
UNIT 2 FAILURE	OPEN	CLOSED	CLOSED	OPEN

	QTY.	ITEM	DESCRIPTION
E	4	1	LOW PRESSURE SHUT-OFF VALVE- 1" NOM. (BY OTHERS)
N	2	2	HYDRAULIC POWER UNIT – 7SHP
N	1	3	EMERGENCY HYDRAULIC POWER UNIT – 10HP
N	2	4A	UNIT 1 SHUT-OFF VALVE- 1-1/2" NOM. (BY OTHERS)
N	2	4B	UNIT 2 SHUT-OFF VALVE- 1-1/2" NOM. (BY OTHERS)
N	1	5A	SHUT-OFF VALVE-UNIT 1 HPU – 1-1/2" NOM. (BY OTHERS)
N	1	5B	SHUT-OFF VALVE-UNIT 1 HPU – 1-1/2" NOM. (BY OTHERS)

NOTES:

1. HELM PUMP SHOWN FROM REAR VIEW.
2. N.O. – NORMALLY OPEN
   N.C. – NORMALLY CLOSED
   HPU – HYDRAULIC POWER UNIT
   D.P. – DESIGN PRESSURE
   W.P. – WORKING PRESSURE
   DARB – DOUBLE ACTING RELIEF AND BYPASS
3. ALL PIPES, FITTINGS AND HOSES TO BE SHIPYARD SUPPLIED UNLESS OTHERWISE INDICATED.
4. SHIPYARD IS RESPONSIBLE FOR DETERMINING PIPE AND TUBING WALL THICKNESS AND HOSE CONSTRUCTION STANDARDS BASED ON MAXIMUM WORKING PRESSURES AS INDICATED. WHERE PRESSURES ARE NOT INDICATED, PIPES OR TUBES ARE SUBJECT TO LOCAL HYDROSTATIC PRESSURE ONLY. MAXIMUM PRESSURE OF HELM PUMP AUTOFILL LINE (IF SHOWN) IS 30 PSI.
5. PIPING AND TUBING SIZES SHOWN ARE SUGGESTED MINIMUM DIAMETERS. SHIPYARD IS RESPONSIBLE FOR DETERMINING PIPE AND TUBING DIAMETERS BASED ON FLOW RATES AS INDICATED AS WELL AS LENGTH OF PIPING RUN EXPECTED.
6. AVOID "GOOSENECKED" PIPING. SHIPYARD TO PROVIDE AIR BLEED FITTINGS ON PIPING AS REQ'D.
7. ALL PIPES TO BE THOROUGHLY CLEANED PRIOR TO START-UP.
8. FILL SYSTEM WITH ISO 32 HYDRAULIC FLUID.
9. SEE INDIVIDUAL COMPONENT O.A.D. DWG'S FOR LOCATIONS OF PRESSURE AND FLOW ADJUSTMENTS AS WELL AS ELECTRICAL CONNECTIONS.
10. SHIPYARD IS RESPONSIBLE FOR PLACING IDENTIFICATION LABELS ON ALL UNIT 1 AND UNIT 2 3-WAY AND DARB ISOLATION VALVES ONCE INSTALLATION IS COMPLETE.
11. RESERVOIR FILLING (OR BALANCING) PIPING BETWEEN HPU 1&2 TO BE INSTALLED THROUGHOUT ITS LENGTH BELOW CONNECTING PORTS ON RESERVOIRS.
12. HIGHEST POINT OF HEADER TANK TO BE LOCATED AT HIGHEST POINT OF STEERING SYSTEM.

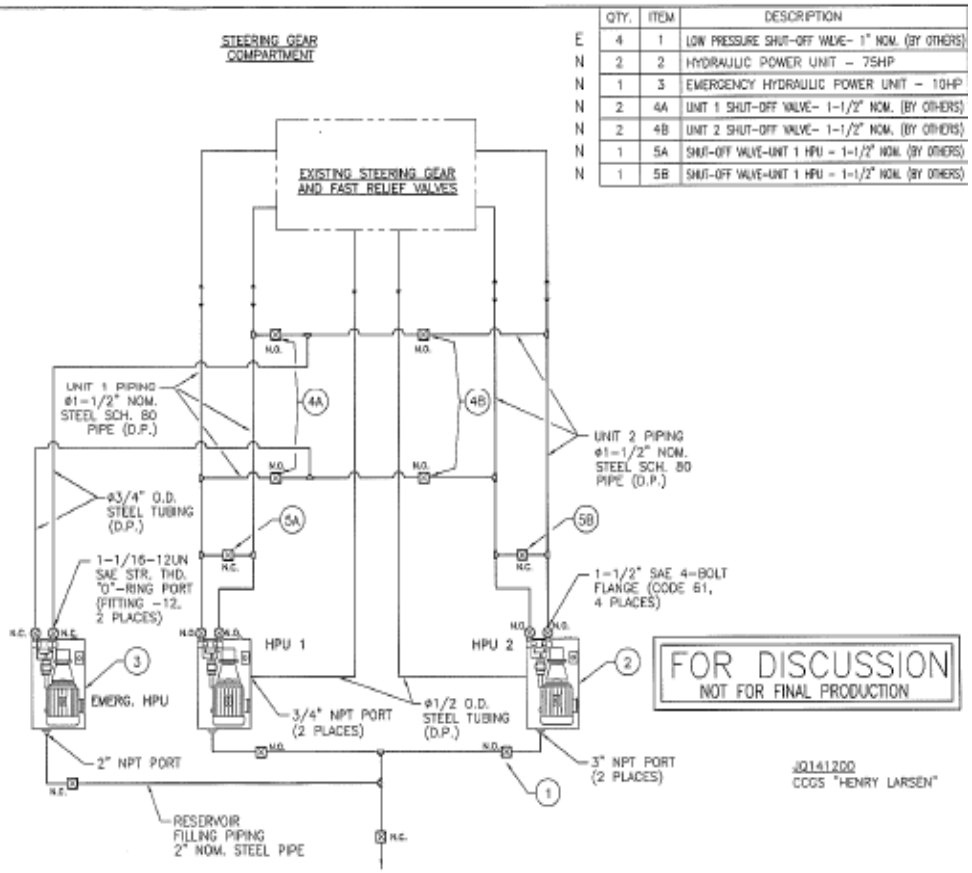

FOR DISCUSSION
NOT FOR FINAL PRODUCTION

J0141200
CCGS "HENRY LARSEN"

STEERING GEAR TORQUE: 506,310 lb.ft (70 Tm) AT ±35°
DESIGN PRESSURE: 1600 PSI (11.0 MPa) – SET AT EXISTING F.A.R.V.
MAX. WORKING PRESSURE: 1280 PSI (8.8 MPa) – SET AT ITEMS 6, HPU
SLOW FLOW RATE: 91 GPM (344 L/min) – SET THRU CONTROL SYSTEM
FAST FLOW RATE: 182 GPM (689 L/min) – SET THRU CONTROL SYSTEM

EMERGENCY STEERING GEAR TORQUE: 433,980 lb.ft (60.00 Tm) AT ±35°
EMERGENCY MAX. WORKING PRESSURE: 1110 PSI (7.7 MPa) – SET AT ITEMS 7, EMERG. HPU
EMERGENCY FLOW RATE: 13.1 GPM (49.6 L/min) – SET AT ITEMS 7, EMERG. HPU

Jastram

PIPING DIAGRAM FOR REFIT STEERING GEAR

D-601870

CONDITION	ISOLATION VALVE POSITIONS			
	4A	4B	5A	5B
NORMAL	OPEN	OPEN	CLOSED	CLOSED
UNIT 1 FAILURE	CLOSED	OPEN	OPEN	CLOSED
UNIT 2 FAILURE	OPEN	CLOSED	CLOSED	OPEN

NOTES:
1. ALL SOLENOID OPERATED VALVES ARE SHOWN IN THEIR DE-ENERGIZED STATE.
2. N.O. – NORMALLY OPEN.
   N.C. – NORMALLY CLOSED.
   HPU – HYDRAULIC POWER UNIT.
   DARB – DOUBLE ACTING RELIEF AND BYPASS.
   W.P. – WORKING PRESSURE.
3. SEE INDIVIDUAL COMPONENT O.A.D. DWG'S FOR LOCATION OF PRESSURE AND FLOW ADJUSTMENTS AS WELL AS ELECTRICAL CONNECTIONS.

FOR DISCUSSION
NOT FOR FINAL PRODUCTION

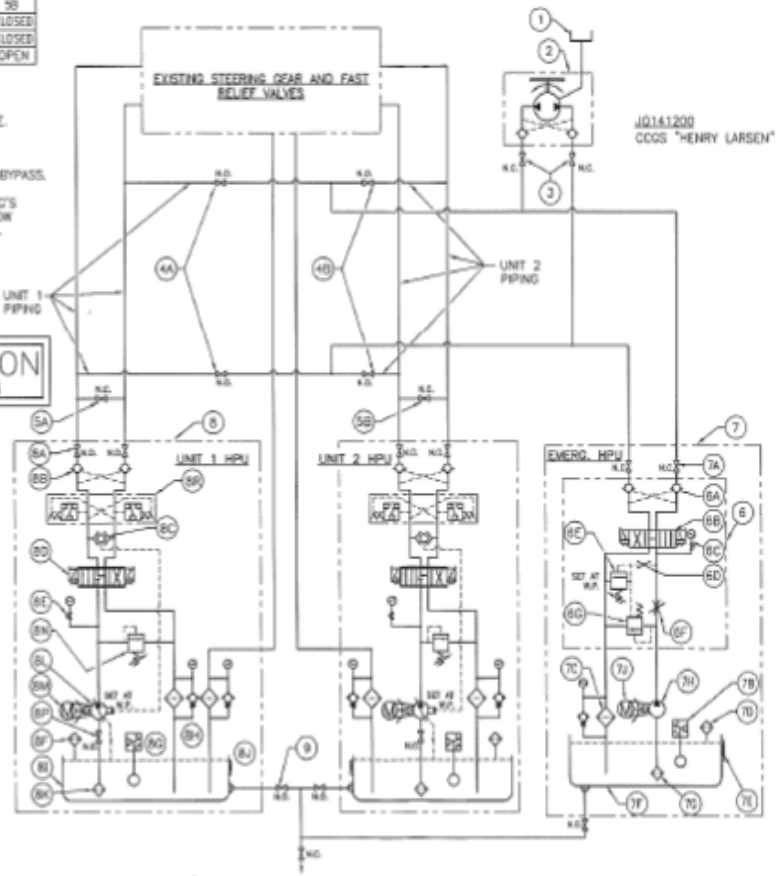

QTY.	ITEM	DESCRIPTION
1	1	HEADER TANK
1	2	HELM PUMP
2	3	HELM PUMP ISOLATION VALVE
2	4A	UNIT 1 ISOLATION VALVE – UNIT 1 PIPING
2	4B	UNIT 2 ISOLATION VALVE – UNIT 2 PIPING
1	5A	HPU BYPASS VALVE – UNIT 1 HPU
1	5B	HPU BYPASS VALVE – UNIT 2 HPU
1	6	POWER STEERING MANIFOLD
1	6A	DUAL PILOT OPERATED CHECK
1	6B	4-WAY SOLENOID
1	6C	PRESSURE GAUGE AND ISOLATOR
1	6D	ORIFICE
1	6E	RELIEF
1	6F	FLOW CONTROL ORIFICE
1	6G	PILOT OPERATED FLOW CONTROL
1	7	EMERGENCY HYDRAULIC POWER UNIT
2	7A	ISOLATION VALVE
1	7B	LOW LEVEL SENSOR AND JUNCTION BOX
1	7C	RETURN LINE FILTER w/
		FILTER BYPASS &
		DIFFERENTIAL PRESSURE GAUGE
1	7D	AIR BREATHER AND FILLER
1	7E	SIGHT & TEMPERATURE GAUGE
1	7F	RESERVOIR
1	7G	SUCTION LINE STRAINER
1	7H	PUMP
1	7J	ELECTRIC MOTOR
2	8	HYDRAULIC POWER UNIT
2	8A	ISOLATION VALVE
1	8B	DUAL PILOT OPERATED CHECK
1	8C	SHUTTLE
1	8D	PORPORTIONAL 4-WAY DIRECTIONAL SOLENOID
1	8E	PRESSURE GAUGE AND ISOLATOR
1	8F	AIR BREATHER & FILLER
1	8G	LOW LEVEL SENSOR & JUNCTION BOX
2	8H	RETURN LINE FILTER w/
		FILTER BYPASS
		DIFFERENTIAL PRESSURE GAUGE &
1	8I	RESERVOIR
1	8J	SIGHT & TEMPERATURE GAUGE
1	8K	SUCTION LINE STRAINER
1	8L	VARIABLE DISPLACEMENT PUMP
1	8M	ELECTRIC MOTOR
1	8N	BACK-UP RELIEF
1	8P	PUMP ISOLATION VALVE – LOCKABLE
1	8R	HYDRAULIC LOCK SENSOR
4	9	RESERVOIR ISOLATION VALVE

jastram

HYDRAULIC SCHEMATIC FOR REPIT STEERING GEAR

D-611656

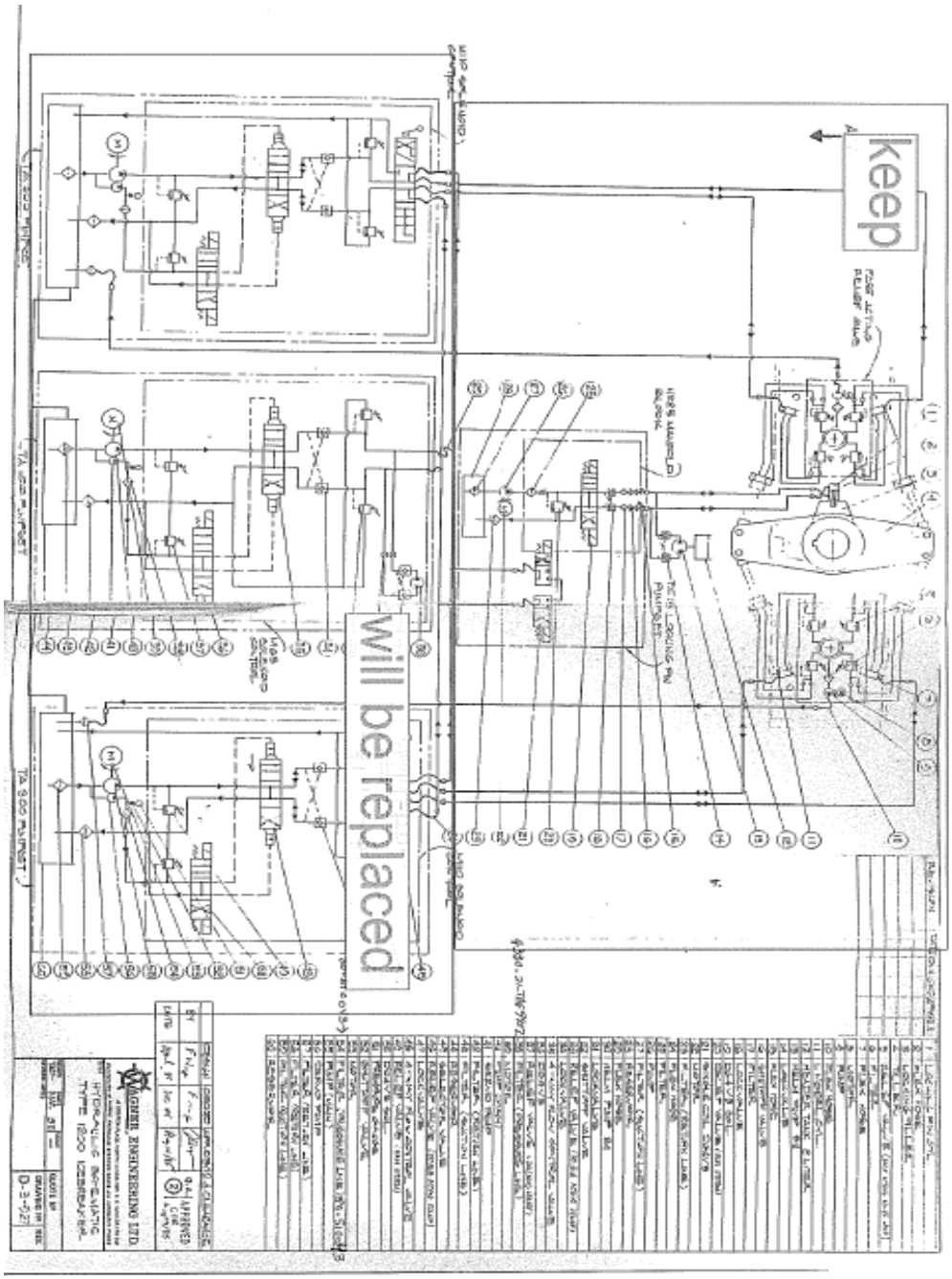
keep
Will be replaced

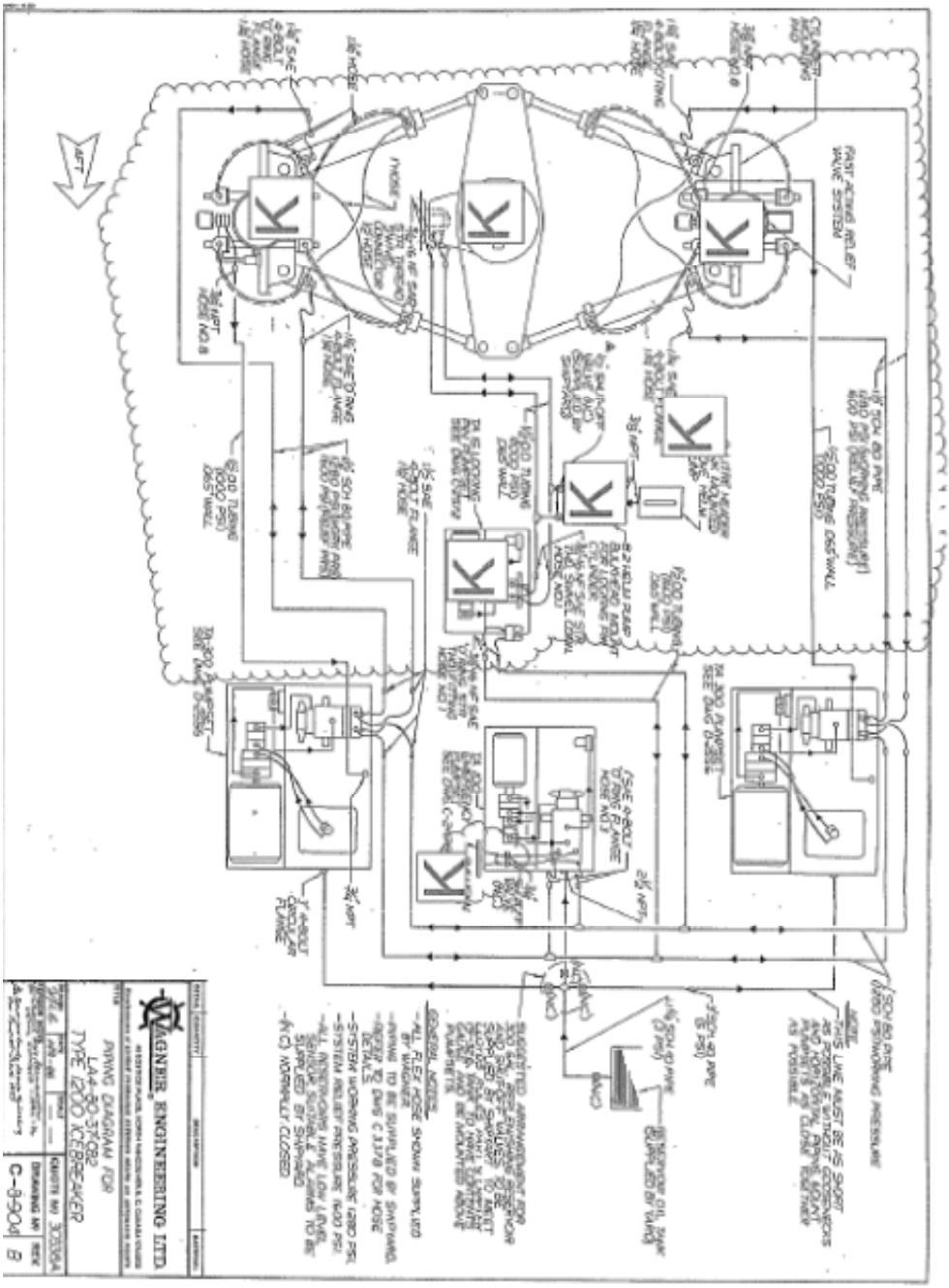

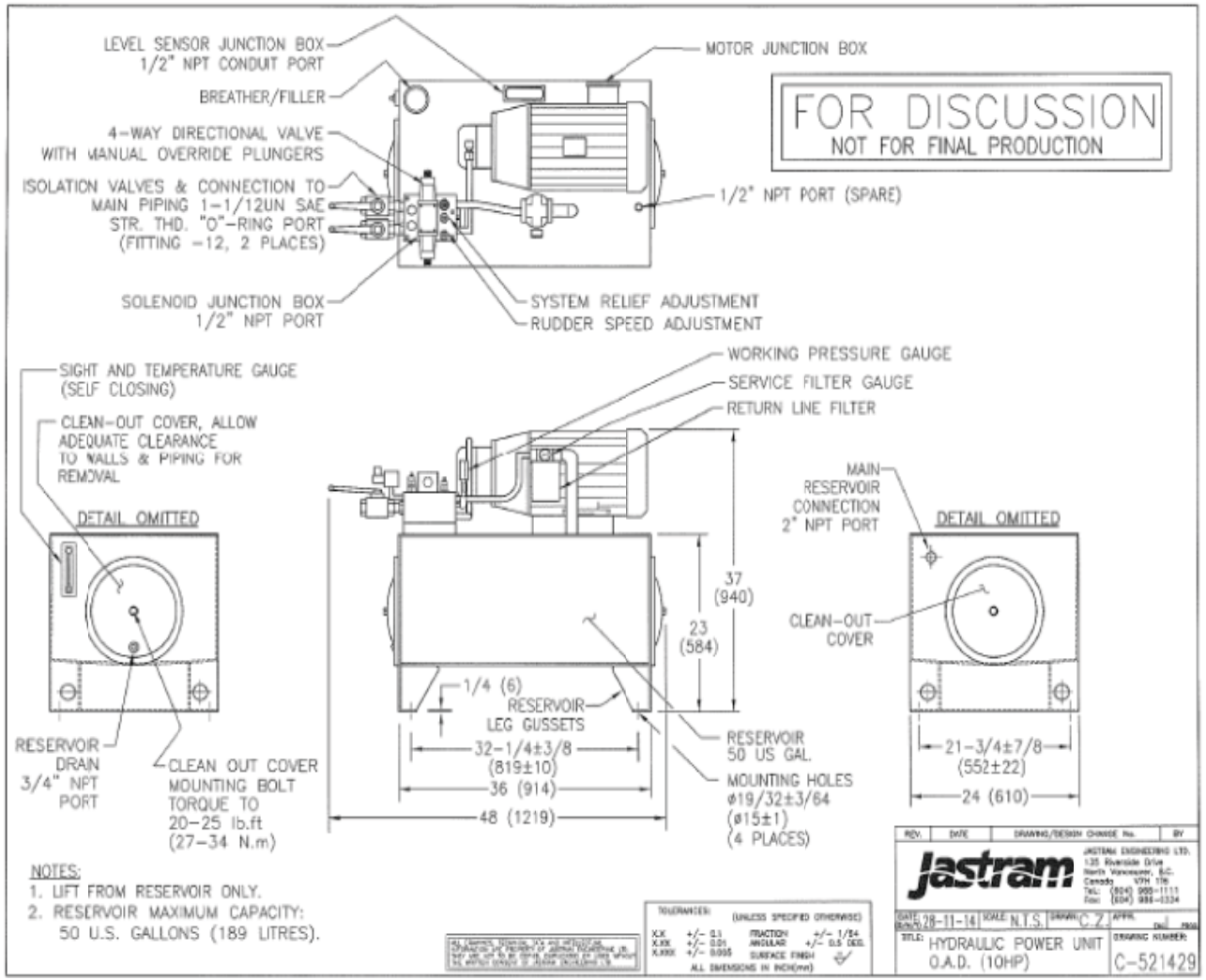
LEVEL SENSOR JUNCTION BOX
1/2" NPT CONDUIT PORT
BREATHER/FILLER
4-WAY DIRECTIONAL VALVE
WITH MANUAL OVERRIDE PLUNGERS
ISOLATION VALVES & CONNECTION TO
MAIN PIPING 1-1/12UN SAE
STR. THD. "O"-RING PORT
(FITTING -12, 2 PLACES)
SOLENOID JUNCTION BOX
1/2" NPT PORT
MOTOR JUNCTION BOX
1/2" NPT PORT (SPARE)
SYSTEM RELIEF ADJUSTMENT
RUDDER SPEED ADJUSTMENT
FOR DISCUSSION
NOT FOR FINAL PRODUCTION
SIGHT AND TEMPERATURE GAUGE
(SELF CLOSING)
CLEAN-OUT COVER, ALLOW
ADEQUATE CLEARANCE
TO WALLS & PIPING FOR
REMOVAL
DETAIL OMITTED
RESERVOIR
DRAIN
3/4" NPT
PORT
CLEAN OUT COVER
MOUNTING BOLT
TORQUE TO
20-25 lb.ft
(27-34 N.m)
WORKING PRESSURE GAUGE
SERVICE FILTER GAUGE
RETURN LINE FILTER
37
(940)
23
(584)
1/4 (6)
RESERVOIR
LEG GUSSETS
32-1/4±3/8
(819±10)
36 (914)
48 (1219)
RESERVOIR
50 US GAL.
MOUNTING HOLES
ø19/32±3/64
(ø15±1)
(4 PLACES)
MAIN
RESERVOIR
CONNECTION
2" NPT PORT
DETAIL OMITTED
CLEAN-OUT
COVER
21-3/4±7/8
(552±22)
24 (610)
NOTES:
1. LIFT FROM RESERVOIR ONLY.
2. RESERVOIR MAXIMUM CAPACITY:
50 U.S. GALLONS (189 LITRES).
TOLERANCES: (UNLESS SPECIFIED OTHERWISE)
X.X +/- 0.1
X.XX +/- 0.01
X.XXX +/- 0.005
FRACTION +/- 1/64
ANGULAR +/- 0.5 DEG.
SURFACE FINISH
ALL DIMENSIONS IN INCH(mm)
REV. DATE DRAWING/DESIGN CHANGE No. BY
jastram
JASTRAM ENGINEERING LTD.
135 Riverside Drive
North Vancouver, B.C.
Canada V7H 1T8
Tel: (604) 985-1111
Fax: (604) 986-4334
DATE 28-11-14
SCALE N.T.S.
DRAWN C. Z.
TITLE: HYDRAULIC POWER UNIT
O.A.D. (10HP)
DRAWING NUMBER
C-521429

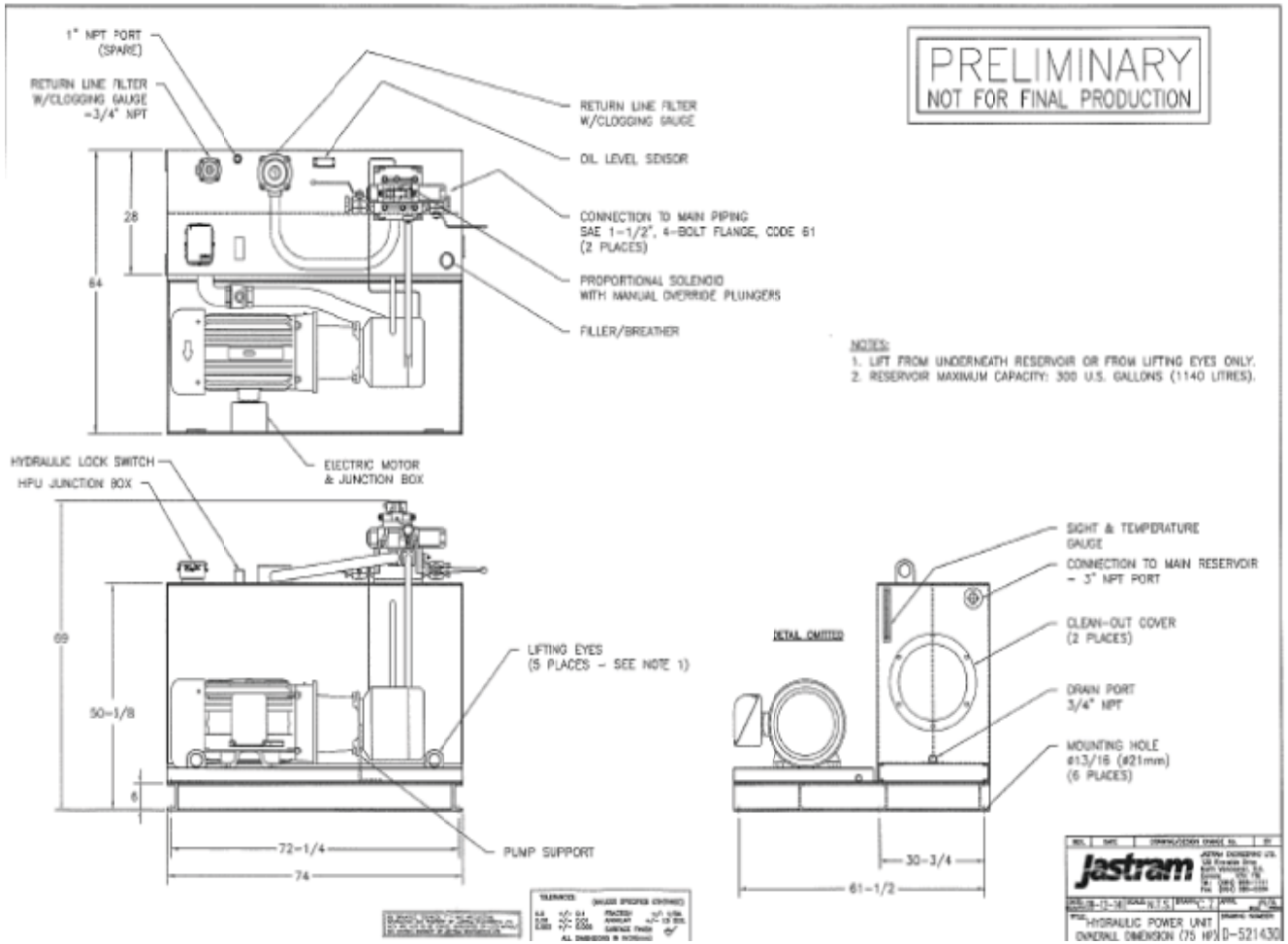
PRELIMINARY
NOT FOR FINAL PRODUCTION
1" NPT PORT (SPARE)
RETURN LINE FILTER W/CLOGGING GAUGE -3/4" NPT
RETURN LINE FILTER W/CLOGGING GAUGE
OIL LEVEL SENSOR
CONNECTION TO MAIN PIPING SAE 1-1/2", 4-BOLT FLANGE, CODE 61 (2 PLACES)
PROPORTIONAL SOLENOID WITH MANUAL OVERRIDE PLUNGERS
FILLER/BREATHER
28
64
NOTES:
1. LIFT FROM UNDERNEATH RESERVOIR OR FROM LIFTING EYES ONLY.
2. RESERVOIR MAXIMUM CAPACITY: 300 U.S. GALLONS (1140 LITRES).
HYDRAULIC LOCK SWITCH
HPU JUNCTION BOX
ELECTRIC MOTOR & JUNCTION BOX
69
50-1/8
6
LIFTING EYES (5 PLACES - SEE NOTE 1)
PUMP SUPPORT
72-1/4
74
DETAIL OMITTED
SIGHT & TEMPERATURE GAUGE
CONNECTION TO MAIN RESERVOIR - 3" NPT PORT
CLEAN-OUT COVER (2 PLACES)
DRAIN PORT 3/4" NPT
MOUNTING HOLE ø13/16 (ø21mm) (6 PLACES)
30-3/4
61-1/2
jastram
HYDRAULIC POWER UNIT
OVERALL DIMENSION (75 HP)
D-521430

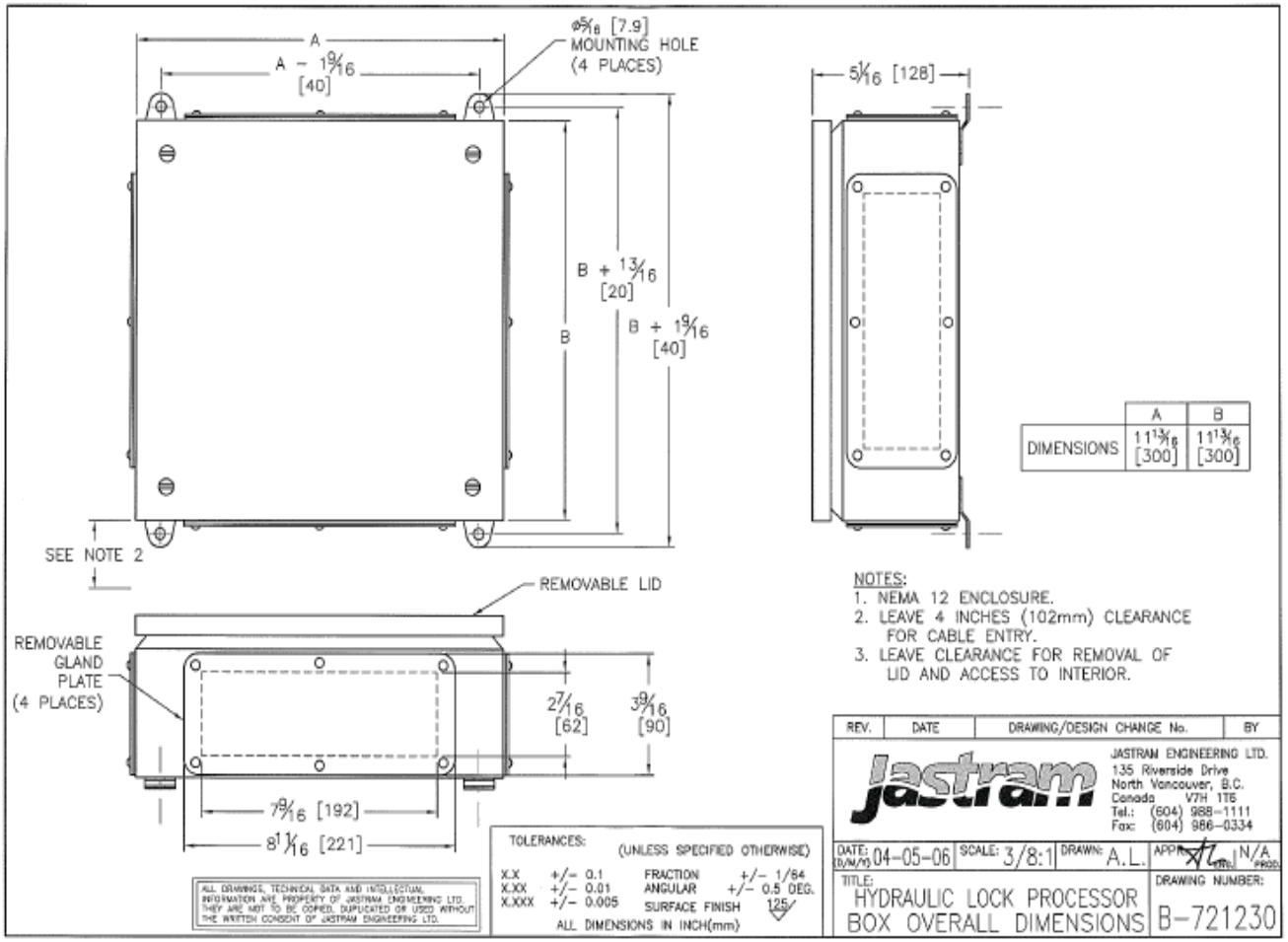
A
A − 1 9/16
[40]
ø5/16 [7.9]
MOUNTING HOLE
(4 PLACES)
B + 13/16
[20]
B
B + 1 9/16
[40]
SEE NOTE 2
5/16 [128]
REMOVABLE LID
REMOVABLE
GLAND
PLATE
(4 PLACES)
2 7/16
[62]
3 9/16
[90]
7 9/16 [192]
8 1/16 [221]
DIMENSIONS
A
B
11 13/16
[300]
11 13/16
[300]
NOTES:
1. NEMA 12 ENCLOSURE.
2. LEAVE 4 INCHES (102mm) CLEARANCE FOR CABLE ENTRY.
3. LEAVE CLEARANCE FOR REMOVAL OF LID AND ACCESS TO INTERIOR.
REV.
DATE
DRAWING/DESIGN CHANGE No.
BY
jastram
JASTRAM ENGINEERING LTD.
135 Riverside Drive
North Vancouver, B.C.
Canada V7H 1T6
Tel.: (604) 988-1111
Fax: (604) 986-0334
DATE: (D/M/Y) 04-05-06
SCALE: 3/8:1
DRAWN: A.L.
APPR. ENG. N/A PROD.
TITLE:
HYDRAULIC LOCK PROCESSOR
BOX OVERALL DIMENSIONS
DRAWING NUMBER:
B-721230
TOLERANCES: (UNLESS SPECIFIED OTHERWISE)
X.X +/- 0.1
X.XX +/- 0.01
X.XXX +/- 0.005
FRACTION +/- 1/64
ANGULAR +/- 0.5 DEG.
SURFACE FINISH 125
ALL DIMENSIONS IN INCH(mm)
ALL DRAWINGS, TECHNICAL DATA AND INTELLECTUAL INFORMATION ARE PROPERTY OF JASTRAM ENGINEERING LTD. THEY ARE NOT TO BE COPIED, DUPLICATED OR USED WITHOUT THE WRITTEN CONSENT OF JASTRAM ENGINEERING LTD.

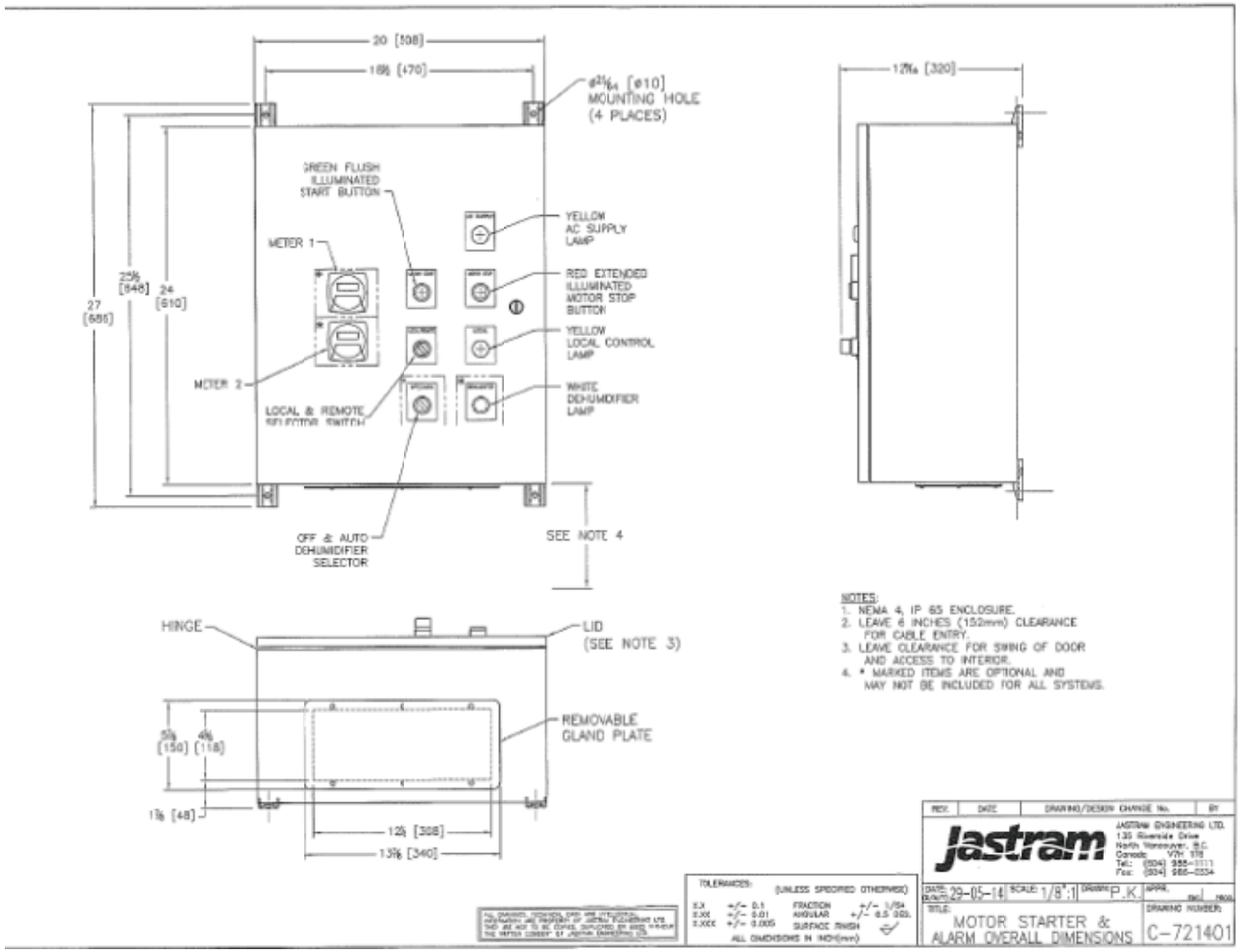
20 [508]
18½ [470]
ø21/64 [ø10]
MOUNTING HOLE
(4 PLACES)
GREEN FLUSH
ILLUMINATED
START BUTTON
METER 1
YELLOW
AC SUPPLY
LAMP
RED EXTENDED
ILLUMINATED
MOTOR STOP
BUTTON
YELLOW
LOCAL CONTROL
LAMP
WHITE
DEHUMIDIFIER
LAMP
METER 2
LOCAL & REMOTE
SELECTOR SWITCH
OFF & AUTO
DEHUMIDIFIER
SELECTOR
27
[686]
25⅛
[648]
24
[610]
SEE NOTE 4
12⅝ [320]
HINGE
LID
(SEE NOTE 3)
REMOVABLE
GLAND PLATE
5⅞ [150]
4⅝ [118]
1⅞ [48]
12½ [308]
13⅜ [340]
NOTES:
1. NEMA 4, IP 65 ENCLOSURE.
2. LEAVE 6 INCHES (152mm) CLEARANCE FOR CABLE ENTRY.
3. LEAVE CLEARANCE FOR SWING OF DOOR AND ACCESS TO INTERIOR.
4. * MARKED ITEMS ARE OPTIONAL AND MAY NOT BE INCLUDED FOR ALL SYSTEMS.
REV.
DATE
DRAWING/DESIGN CHANGE No.
BY
jastram
JASTRAM ENGINEERING LTD.
135 Riverside Drive
North Vancouver, B.C.
Canada V7H 1T8
Tel: (604) 985-3511
Fax: (604) 985-2334
DATE: 29-05-14
SCALE: 1/8":1
DRAWN: P.K.
APPR.
TITLE:
MOTOR STARTER &
ALARM OVERALL DIMENSIONS
DRAWING NUMBER:
C-721401
TOLERANCES:
(UNLESS SPECIFIED OTHERWISE)
X.X +/- 0.1
X.XX +/- 0.01
X.XXX +/- 0.005
FRACTION +/- 1/64
ANGULAR +/- 0.5 DEG.
SURFACE FINISH
ALL DIMENSIONS IN INCH(mm)

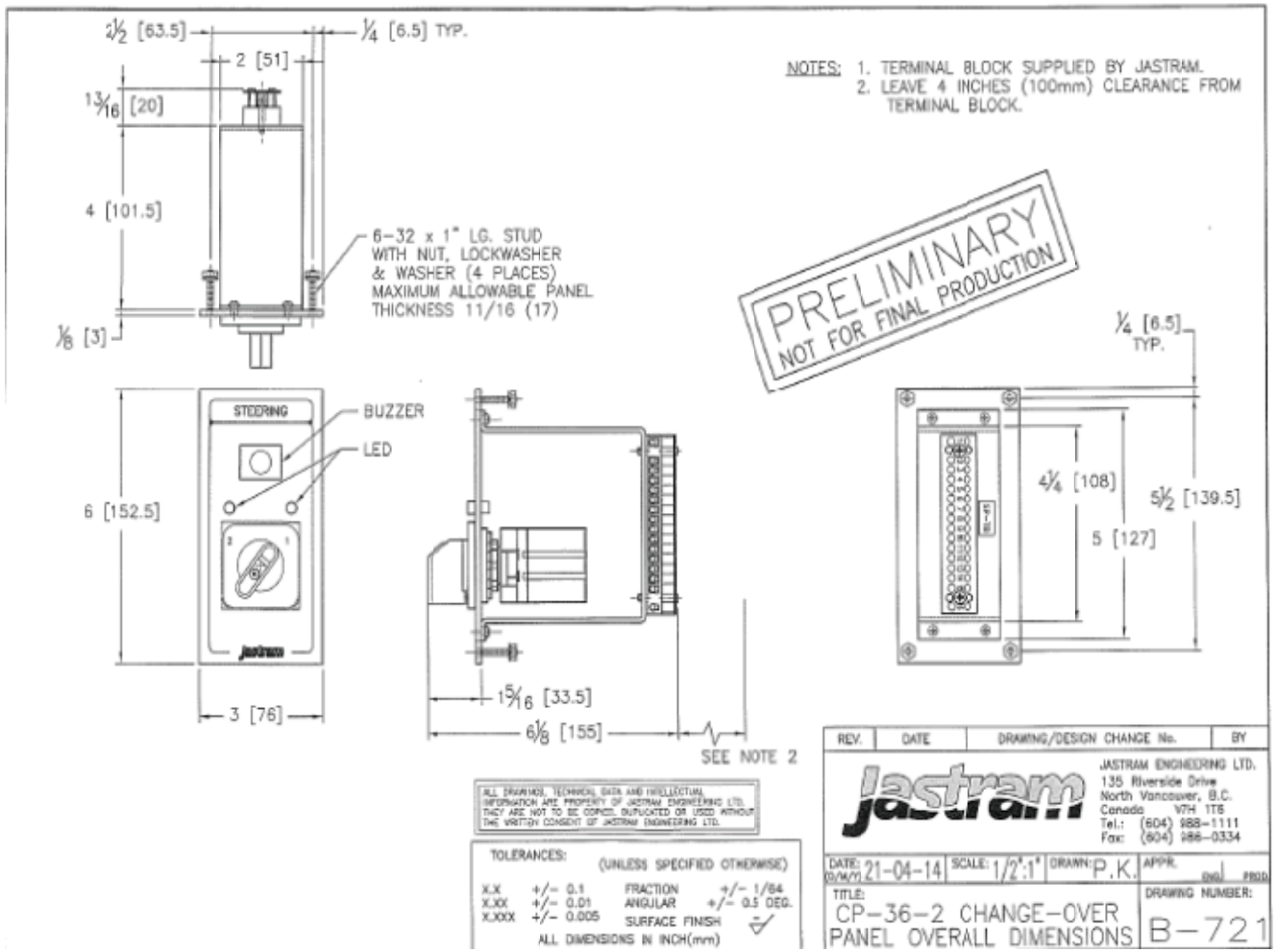
2½ [63.5]
¼ [6.5] TYP.
2 [51]
1 3/16 [20]
4 [101.5]
6-32 x 1" LG. STUD WITH NUT, LOCKWASHER & WASHER (4 PLACES) MAXIMUM ALLOWABLE PANEL THICKNESS 11/16 (17)
⅛ [3]
NOTES: 1. TERMINAL BLOCK SUPPLIED BY JASTRAM.
2. LEAVE 4 INCHES (100mm) CLEARANCE FROM TERMINAL BLOCK.
PRELIMINARY
NOT FOR FINAL PRODUCTION
STEERING
BUZZER
LED
6 [152.5]
3 [76]
1 5/16 [33.5]
6⅛ [155]
SEE NOTE 2
¼ [6.5] TYP.
4¼ [108]
5½ [139.5]
5 [127]
B-45
ALL DRAWINGS, TECHNICAL DATA AND INTELLECTUAL INFORMATION ARE PROPERTY OF JASTRAM ENGINEERING LTD. THEY ARE NOT TO BE COPIED, DUPLICATED OR USED WITHOUT THE WRITTEN CONSENT OF JASTRAM ENGINEERING LTD.
TOLERANCES: (UNLESS SPECIFIED OTHERWISE)
X.X +/- 0.1
X.XX +/- 0.01
X.XXX +/- 0.005
FRACTION +/- 1/64
ANGULAR +/- 0.5 DEG.
SURFACE FINISH
ALL DIMENSIONS IN INCH(mm)
REV. DATE DRAWING/DESIGN CHANGE No. BY
jastram
JASTRAM ENGINEERING LTD.
135 Riverside Drive
North Vancouver, B.C.
Canada V7H 1T6
Tel.: (604) 988-1111
Fax: (604) 986-0334
DATE: (D/M/Y) 21-04-14
SCALE: 1/2":1"
DRAWN: P.K.
APPR. DWG PROD
TITLE:
CP-36-2 CHANGE-OVER PANEL OVERALL DIMENSIONS
DRAWING NUMBER:
B-721

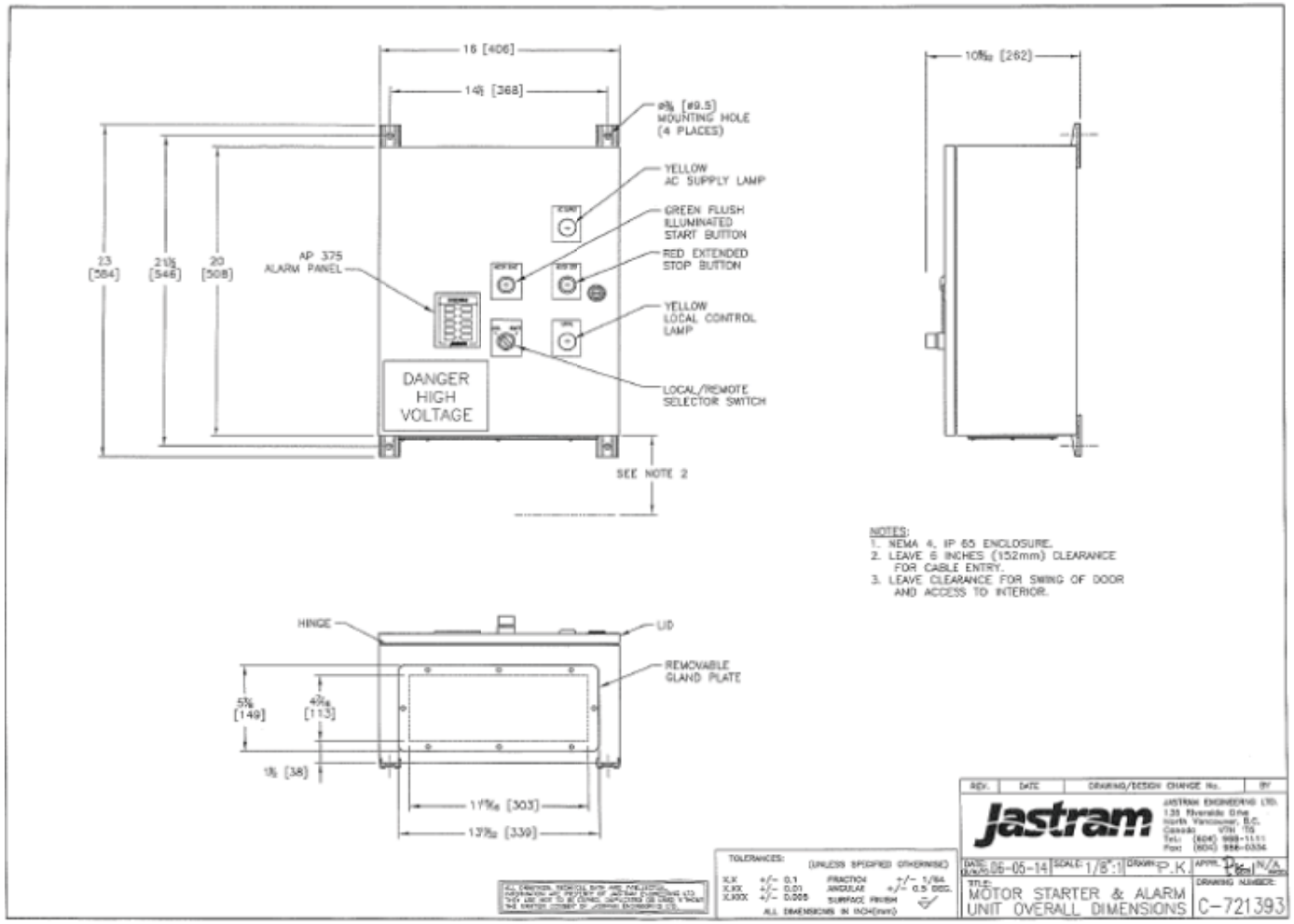
16 [406]
14½ [368]
ø⅜ [ø9.5] MOUNTING HOLE (4 PLACES)
YELLOW AC SUPPLY LAMP
GREEN FLUSH ILLUMINATED START BUTTON
RED EXTENDED STOP BUTTON
YELLOW LOCAL CONTROL LAMP
LOCAL/REMOTE SELECTOR SWITCH
AP 375 ALARM PANEL
23 [584]
21½ [546]
20 [508]
DANGER HIGH VOLTAGE
SEE NOTE 2
10⅜ [262]
NOTES:
1. NEMA 4, IP 65 ENCLOSURE.
2. LEAVE 6 INCHES (152mm) CLEARANCE FOR CABLE ENTRY.
3. LEAVE CLEARANCE FOR SWING OF DOOR AND ACCESS TO INTERIOR.
HINGE
LID
REMOVABLE GLAND PLATE
5⅞ [149]
4⅜ [113]
1½ [38]
11⅞ [303]
13⅜ [339]
REV. DATE DRAWING/DESIGN CHANGE No. BY
jastram
JASTRAM ENGINEERING LTD.
DATE 06-05-14
SCALE 1/8":1
DRAWN P.K.
TOLERANCES: (UNLESS SPECIFIED OTHERWISE)
X.X +/- 0.1
X.XX +/- 0.01
X.XXX +/- 0.005
FRACTION +/- 1/64
ANGULAR +/- 0.5 DEG.
SURFACE FINISH
ALL DIMENSIONS IN INCH(mm)
TITLE: MOTOR STARTER & ALARM UNIT OVERALL DIMENSIONS
DRAWING NUMBER: C-721393

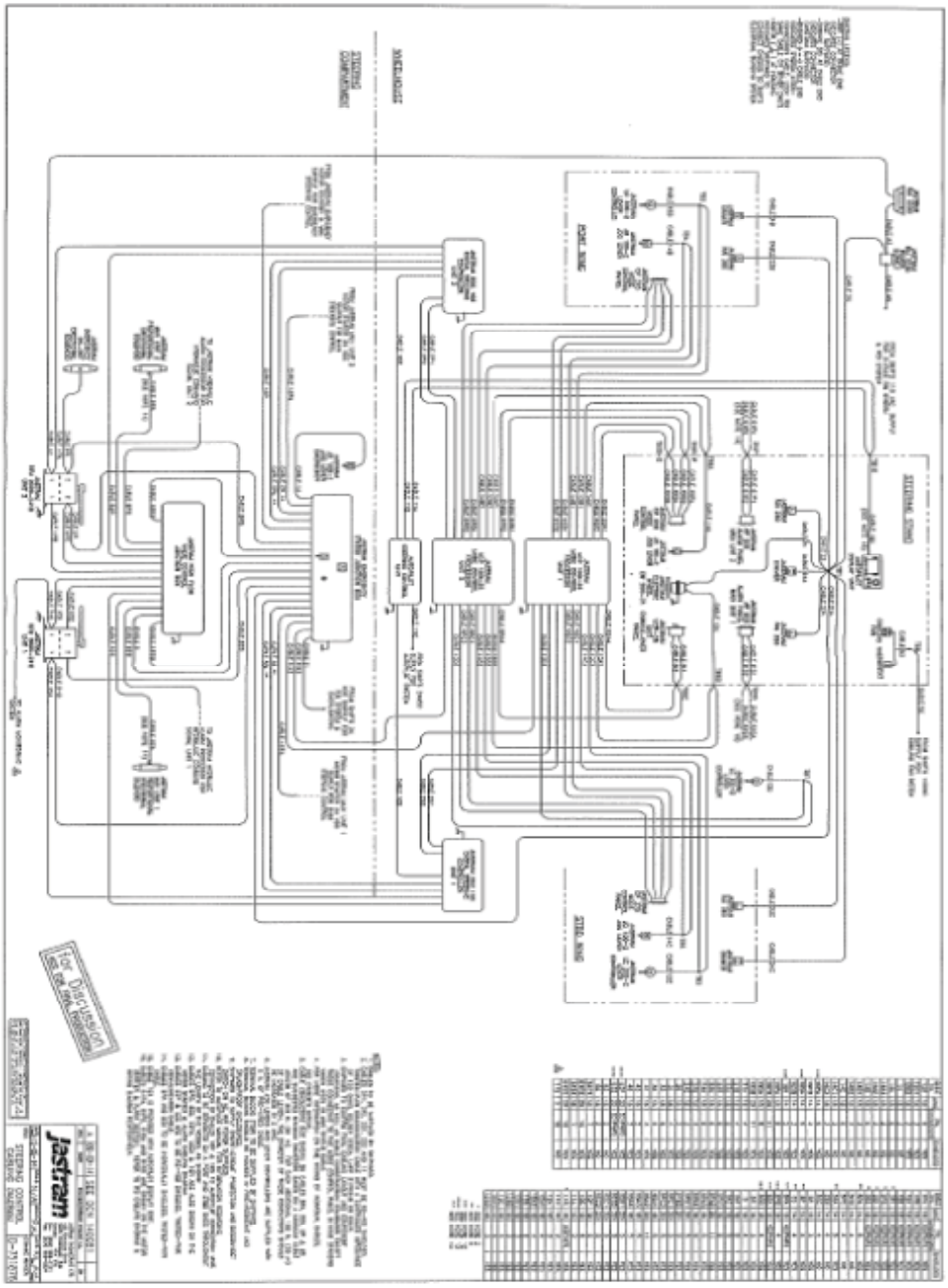

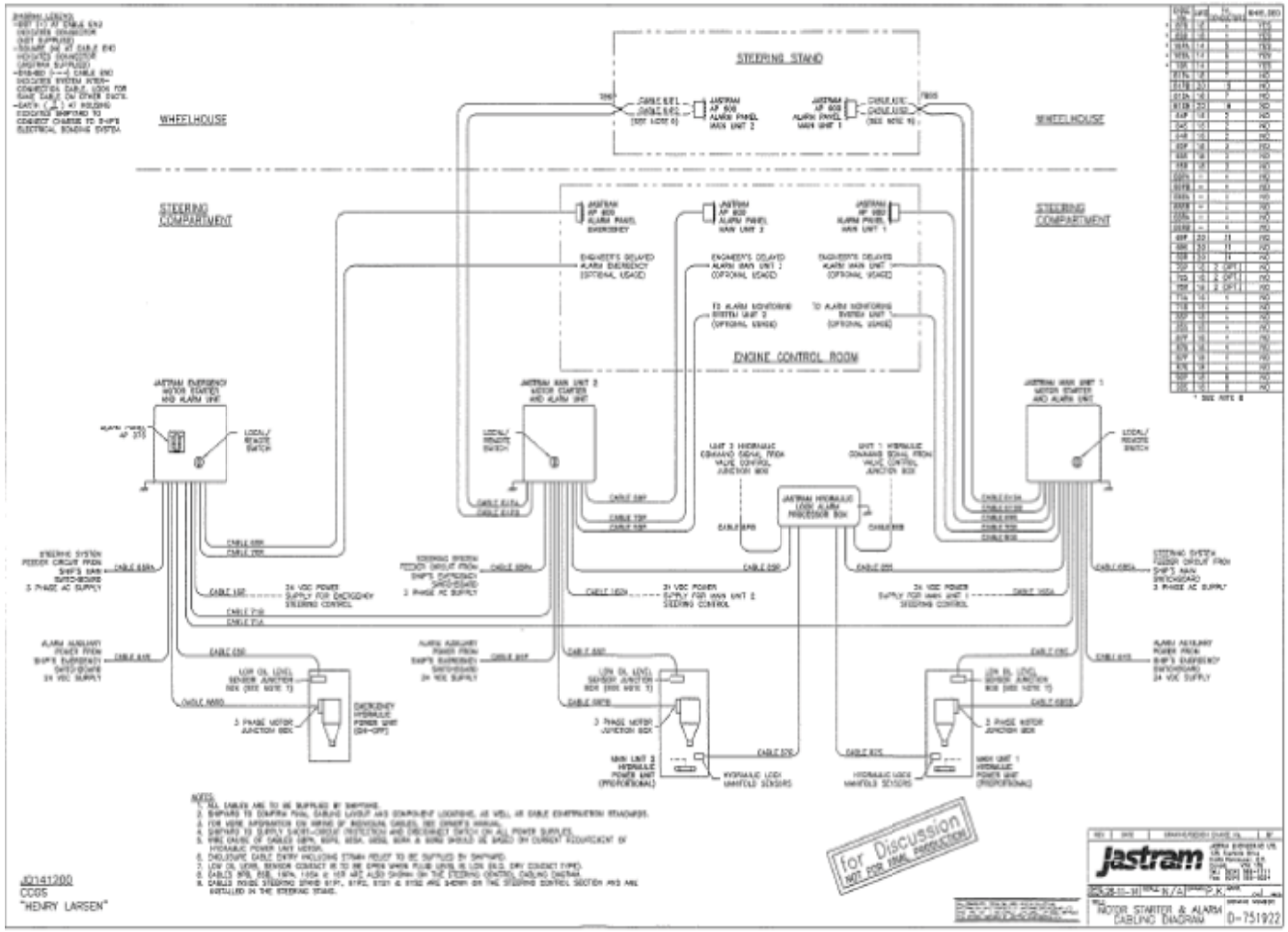
STEERING STAND
WHEELHOUSE
WHEELHOUSE
STEERING COMPARTMENT
STEERING COMPARTMENT
ENGINE CONTROL ROOM
for Discussion
NOT FOR FINAL PRODUCTION
jastram
MOTOR STARTER & ALARM CABLING DIAGRAM
D-751922
JD141200
CCDS
"HENRY LARSEN"

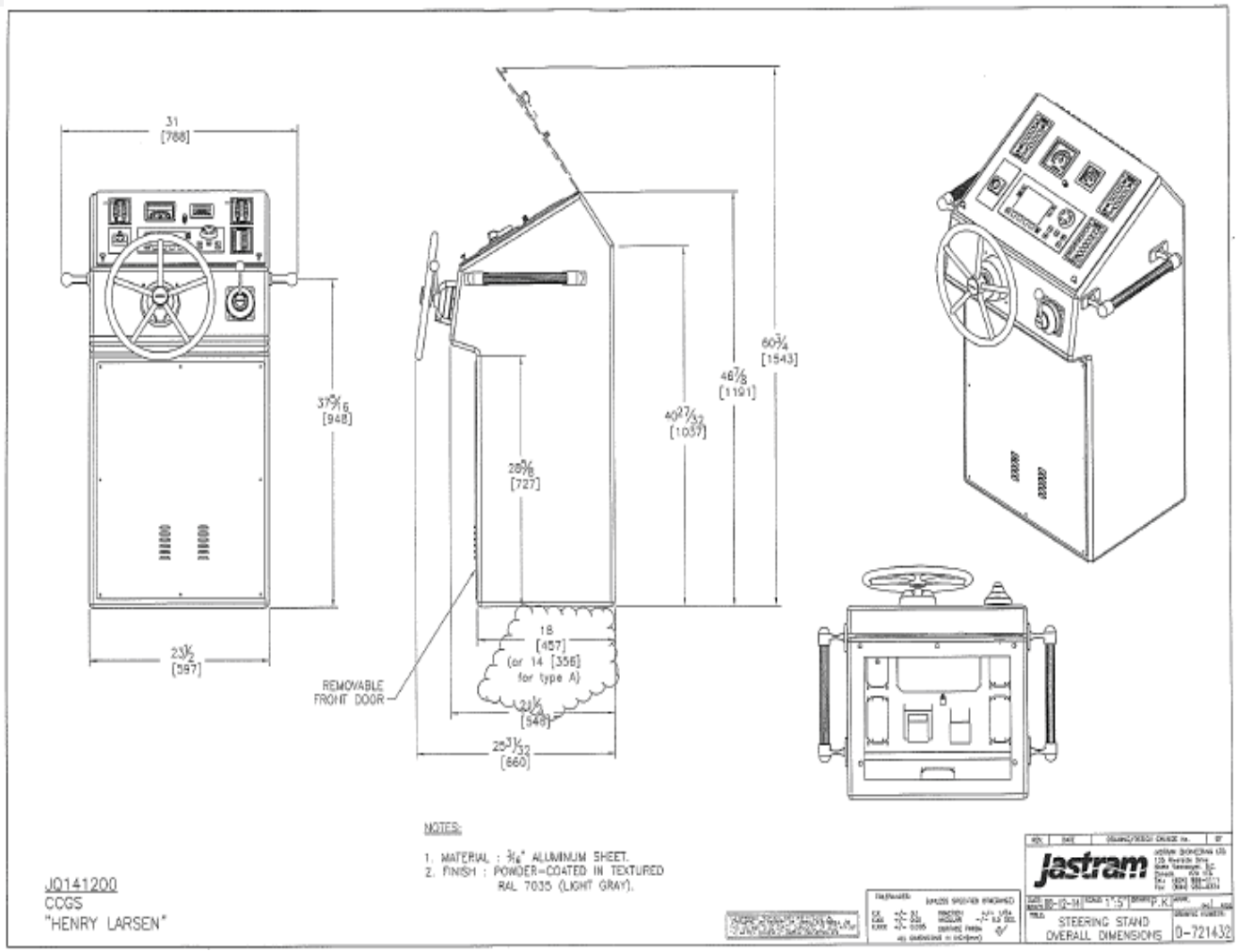
31
[788]
37 9/16
[948]
23 1/2
[597]
REMOVABLE
FRONT DOOR
60 3/4
[1543]
46 7/8
[1191]
40 27/32
[1037]
28 5/8
[727]
18
[457]
(or 14 [356]
for type A)
37 1/8
[943]
26 3/32
[660]
NOTES:
1. MATERIAL : 3/16" ALUMINUM SHEET.
2. FINISH : POWDER-COATED IN TEXTURED
RAL 7035 (LIGHT GRAY).
JO141200
CCGS
"HENRY LARSEN"
Jastram
STEERING STAND
OVERALL DIMENSIONS
0-721432

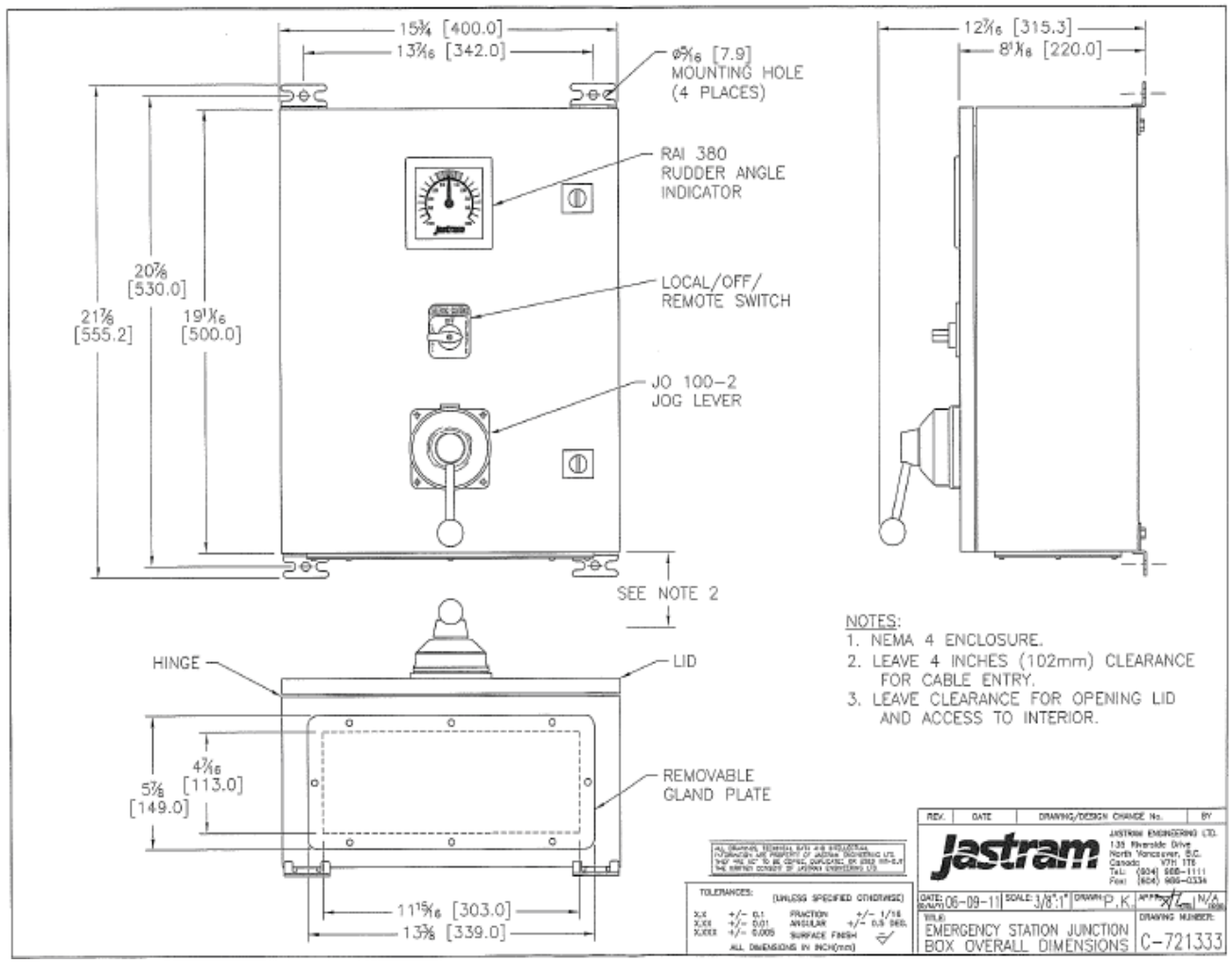
15¾ [400.0]
13⅜ [342.0]
ø5/16 [7.9]
MOUNTING HOLE
(4 PLACES)
RAI 380
RUDDER ANGLE
INDICATOR
LOCAL/OFF/
REMOTE SWITCH
JO 100-2
JOG LEVER
20⅞
[530.0]
21⅞
[555.2]
19 11/16
[500.0]
SEE NOTE 2
12 7/16 [315.3]
8 11/16 [220.0]
HINGE
LID
4 7/16
[113.0]
5⅞
[149.0]
REMOVABLE
GLAND PLATE
11 15/16 [303.0]
13⅜ [339.0]
NOTES:
1. NEMA 4 ENCLOSURE.
2. LEAVE 4 INCHES (102mm) CLEARANCE FOR CABLE ENTRY.
3. LEAVE CLEARANCE FOR OPENING LID AND ACCESS TO INTERIOR.
TOLERANCES: (UNLESS SPECIFIED OTHERWISE)
X.X +/- 0.1
X.XX +/- 0.01
X.XXX +/- 0.005
FRACTION +/- 1/16
ANGULAR +/- 0.5 DEG.
SURFACE FINISH
ALL DIMENSIONS IN INCH(mm)
REV. | DATE | DRAWING/DESIGN CHANGE No. | BY
jastram
JASTRAM ENGINEERING LTD.
135 Riverside Drive
North Vancouver, B.C.
Canada V7H 1T6
Tel: (604) 986-1111
Fax: (604) 986-0334
DATE: 06-09-11
SCALE: 3/8":1"
DRAWN: P.K.
N/A
TITLE:
EMERGENCY STATION JUNCTION BOX OVERALL DIMENSIONS
DRAWING NUMBER:
C-721333

579

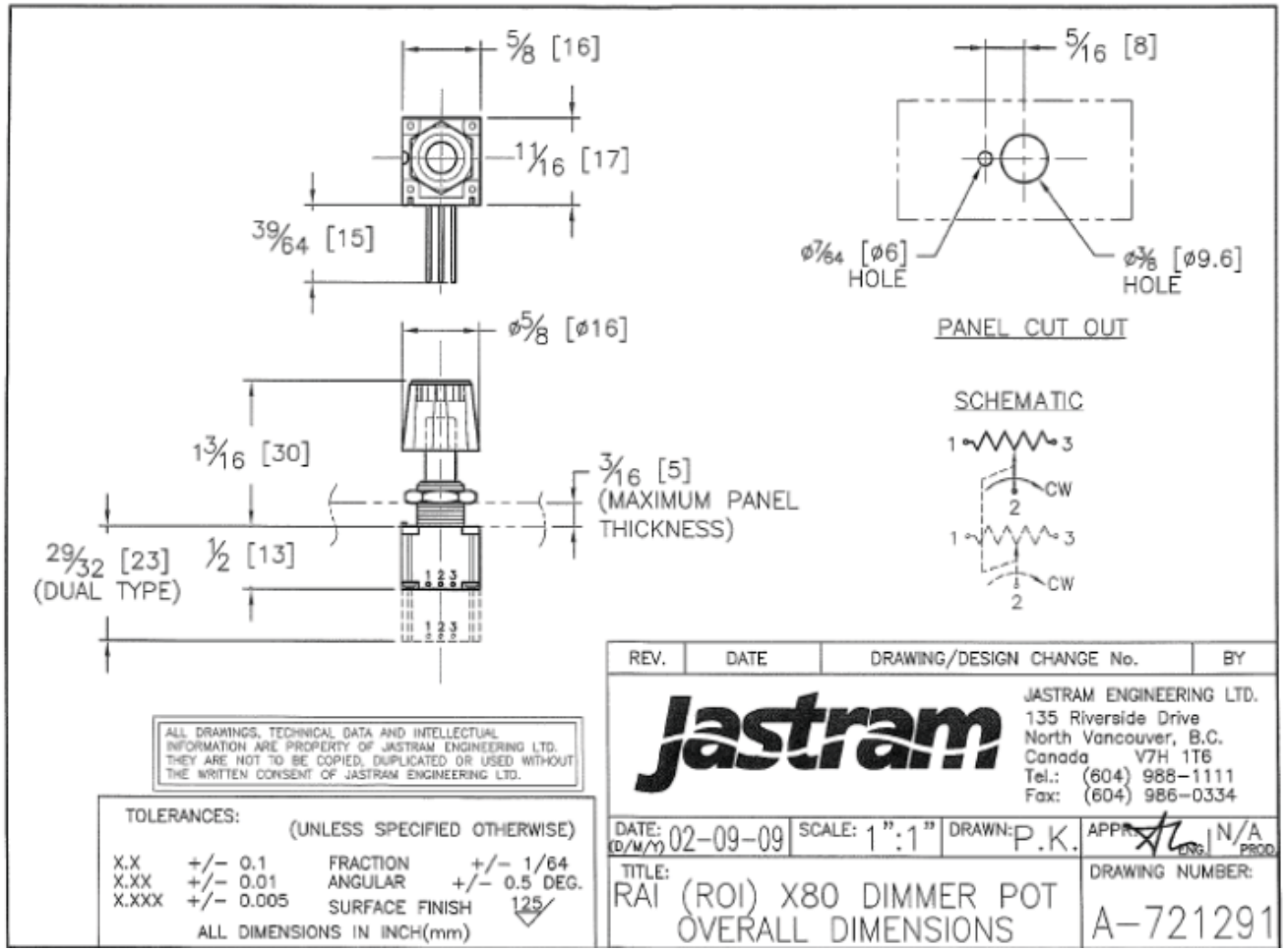
5/8 [16]
11/16 [17]
39/64 [15]
ø5/8 [ø16]
1 3/16 [30]
29/32 [23]
(DUAL TYPE)
1/2 [13]
3/16 [5]
(MAXIMUM PANEL
THICKNESS)
1 2 3
1 2 3
5/16 [8]
ø7/64 [ø6]
HOLE
ø3/8 [ø9.6]
HOLE
PANEL CUT OUT
SCHEMATIC
1
3
CW
2
1
3
CW
2
REV.
DATE
DRAWING/DESIGN CHANGE No.
BY
jastram
JASTRAM ENGINEERING LTD.
135 Riverside Drive
North Vancouver, B.C.
Canada V7H 1T6
Tel.: (604) 988-1111
Fax: (604) 986-0334
ALL DRAWINGS, TECHNICAL DATA AND INTELLECTUAL INFORMATION ARE PROPERTY OF JASTRAM ENGINEERING LTD. THEY ARE NOT TO BE COPIED, DUPLICATED OR USED WITHOUT THE WRITTEN CONSENT OF JASTRAM ENGINEERING LTD.
TOLERANCES:
(UNLESS SPECIFIED OTHERWISE)
X.X +/- 0.1
X.XX +/- 0.01
X.XXX +/- 0.005
FRACTION +/- 1/64
ANGULAR +/- 0.5 DEG.
SURFACE FINISH 125
ALL DIMENSIONS IN INCH(mm)
DATE: (D/M/Y) 02-09-09
SCALE: 1":1"
DRAWN: P.K.
APPR. ENG. N/A PROD.
TITLE:
RAI (ROI) X80 DIMMER POT
OVERALL DIMENSIONS
DRAWING NUMBER:
A-721291

580

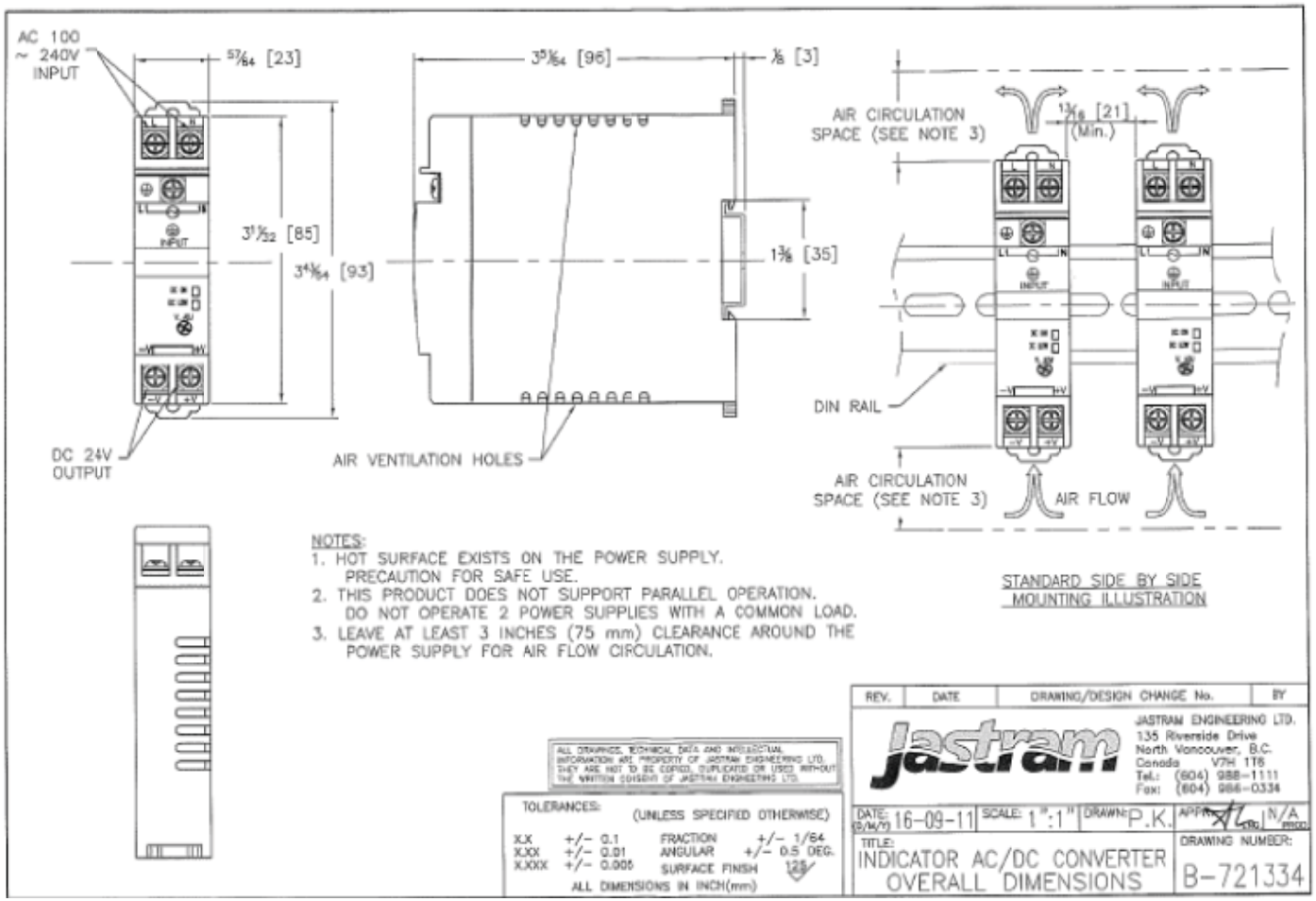
AC 100 ~ 240V INPUT
5/64 [23]
3 5/64 [96]
1/8 [3]
3 1/32 [85]
3 4/64 [93]
1 3/8 [35]
DC 24V OUTPUT
AIR VENTILATION HOLES
AIR CIRCULATION SPACE (SEE NOTE 3)
13/16 [21] (Min.)
DIN RAIL
AIR CIRCULATION SPACE (SEE NOTE 3)
AIR FLOW
NOTES:
1. HOT SURFACE EXISTS ON THE POWER SUPPLY. PRECAUTION FOR SAFE USE.
2. THIS PRODUCT DOES NOT SUPPORT PARALLEL OPERATION. DO NOT OPERATE 2 POWER SUPPLIES WITH A COMMON LOAD.
3. LEAVE AT LEAST 3 INCHES (75 mm) CLEARANCE AROUND THE POWER SUPPLY FOR AIR FLOW CIRCULATION.
STANDARD SIDE BY SIDE MOUNTING ILLUSTRATION
REV. | DATE | DRAWING/DESIGN CHANGE No. | BY
jastram
JASTRAM ENGINEERING LTD.
135 Riverside Drive
North Vancouver, B.C.
Canada V7H 1T6
Tel.: (604) 988-1111
Fax: (604) 986-0334
TOLERANCES: (UNLESS SPECIFIED OTHERWISE)
X.X +/- 0.1
X.XX +/- 0.01
X.XXX +/- 0.005
FRACTION +/- 1/64
ANGULAR +/- 0.5 DEG.
SURFACE FINISH 125
ALL DIMENSIONS IN INCH(mm)
DATE: (D/M/Y) 16-09-11
SCALE: 1":1"
DRAWN: P.K.
N/A
TITLE:
INDICATOR AC/DC CONVERTER OVERALL DIMENSIONS
DRAWING NUMBER:
B-721334

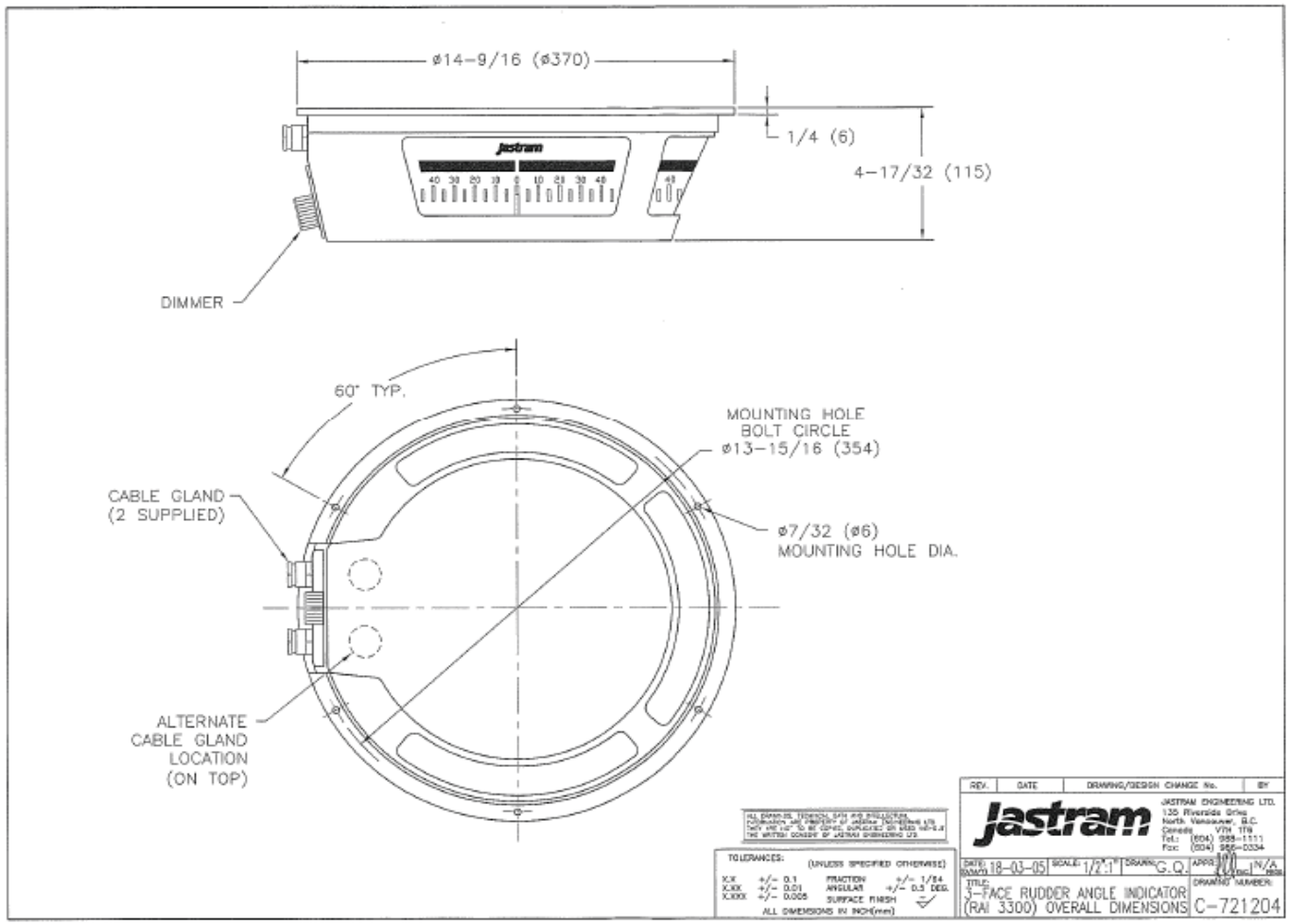
ø14–9/16 (ø370)
1/4 (6)
4–17/32 (115)
jastram
DIMMER
60° TYP.
MOUNTING HOLE
BOLT CIRCLE
ø13–15/16 (354)
CABLE GLAND
(2 SUPPLIED)
ø7/32 (ø6)
MOUNTING HOLE DIA.
ALTERNATE
CABLE GLAND
LOCATION
(ON TOP)
TOLERANCES:
(UNLESS SPECIFIED OTHERWISE)
X.X +/- 0.1
X.XX +/- 0.01
X.XXX +/- 0.005
FRACTION +/- 1/64
ANGULAR +/- 0.5 DEG.
SURFACE FINISH
ALL DIMENSIONS IN INCH(mm)
REV.
DATE
DRAWING/DESIGN CHANGE No.
BY
jastram
JASTRAM ENGINEERING LTD.
135 Riverside Drive
North Vancouver, B.C.
Canada V7H 1T9
Tel.: (604) 988-1111
Fax: (604) 985-0334
DATE: 18-03-05
SCALE: 1/2 : 1
DRAWN: G.Q.
APPROVED: N/A
TITLE:
3-FACE RUDDER ANGLE INDICATOR
(RAI 3300) OVERALL DIMENSIONS
DRAWING NUMBER:
C-721204

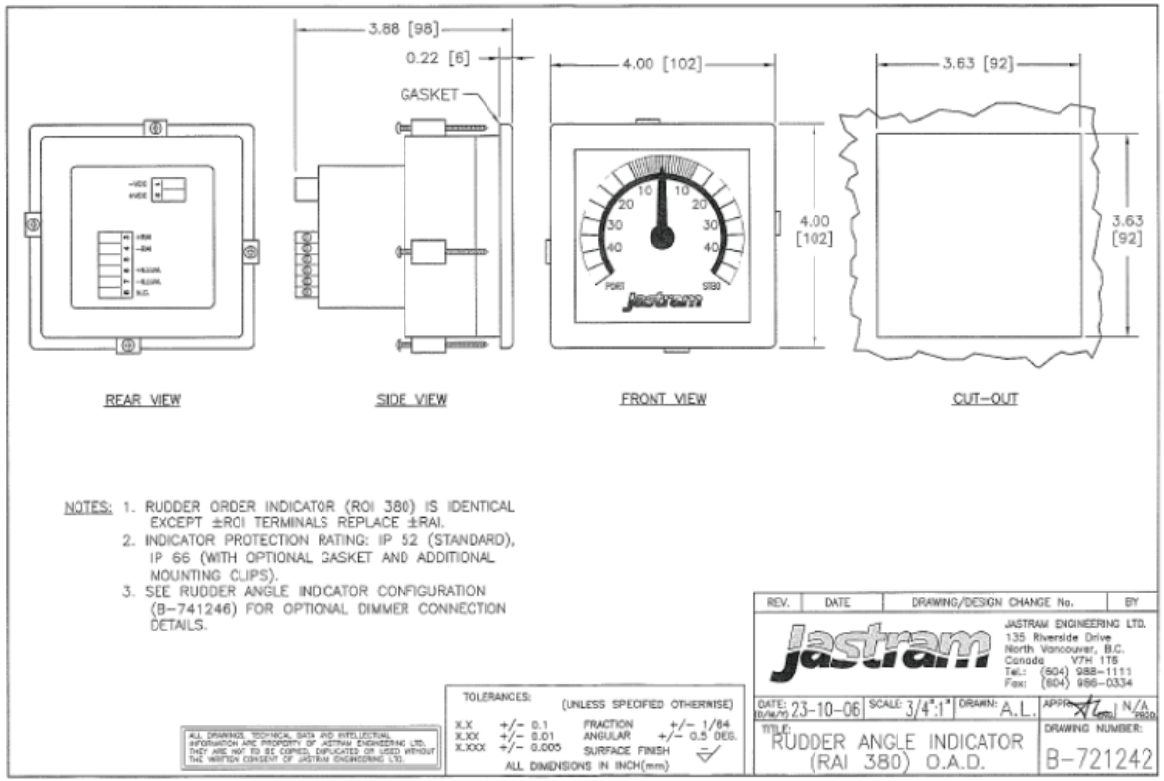
3.88 [98]
0.22 [6]
GASKET
4.00 [102]
3.63 [92]
4.00 [102]
3.63 [92]
REAR VIEW
SIDE VIEW
FRONT VIEW
CUT-OUT
NOTES: 1. RUDDER ORDER INDICATOR (ROI 380) IS IDENTICAL EXCEPT ±ROI TERMINALS REPLACE ±RAI.
2. INDICATOR PROTECTION RATING: IP 52 (STANDARD), IP 66 (WITH OPTIONAL GASKET AND ADDITIONAL MOUNTING CLIPS).
3. SEE RUDDER ANGLE INDCATOR CONFIGURATION (B-741246) FOR OPTIONAL DIMMER CONNECTION DETAILS.
REV. DATE DRAWING/DESIGN CHANGE No. BY
JASTRAM ENGINEERING LTD.
135 Riverside Drive
North Vancouver, B.C.
Canada V7H 1T6
Tel.: (604) 988-1111
Fax: (604) 986-0334
DATE: 23-10-06
SCALE: 3/4":1"
DRAWN: A.L.
N/A
TITLE: RUDDER ANGLE INDICATOR (RAI 380) O.A.D.
DRAWING NUMBER: B-721242
TOLERANCES: (UNLESS SPECIFIED OTHERWISE)
X.X +/- 0.1
X.XX +/- 0.01
X.XXX +/- 0.005
FRACTION +/- 1/64
ANGULAR +/- 0.5 DEG.
SURFACE FINISH
ALL DIMENSIONS IN INCH(mm)
ALL DRAWINGS, TECHNICAL DATA AND INTELLECTUAL INFORMATION ARE PROPERTY OF JASTRAM ENGINEERING LTD. THEY ARE NOT TO BE COPIED, DUPLICATED OR USED WITHOUT THE WRITTEN CONSENT OF JASTRAM ENGINEERING LTD.

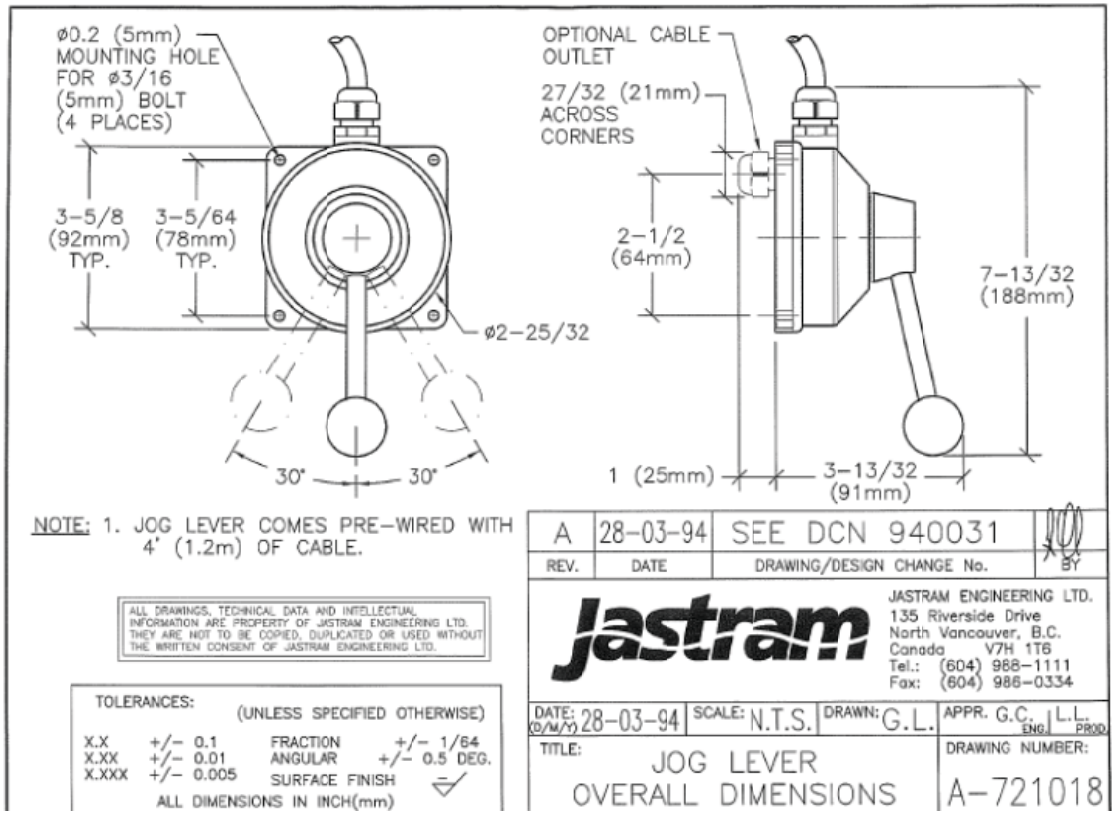
ø0.2 (5mm) MOUNTING HOLE FOR ø3/16 (5mm) BOLT (4 PLACES)
3-5/8 (92mm) TYP.
3-5/64 (78mm) TYP.
ø2-25/32
30°
30°
OPTIONAL CABLE OUTLET
27/32 (21mm) ACROSS CORNERS
2-1/2 (64mm)
7-13/32 (188mm)
1 (25mm)
3-13/32 (91mm)
NOTE: 1. JOG LEVER COMES PRE-WIRED WITH 4' (1.2m) OF CABLE.
A 28-03-94 SEE DCN 940031
REV. DATE DRAWING/DESIGN CHANGE No. BY
ALL DRAWINGS, TECHNICAL DATA AND INTELLECTUAL INFORMATION ARE PROPERTY OF JASTRAM ENGINEERING LTD. THEY ARE NOT TO BE COPIED, DUPLICATED OR USED WITHOUT THE WRITTEN CONSENT OF JASTRAM ENGINEERING LTD.
jastram
JASTRAM ENGINEERING LTD.
135 Riverside Drive
North Vancouver, B.C.
Canada V7H 1T6
Tel.: (604) 988-1111
Fax: (604) 986-0334
TOLERANCES: (UNLESS SPECIFIED OTHERWISE)
X.X +/- 0.1
X.XX +/- 0.01
X.XXX +/- 0.005
FRACTION +/- 1/64
ANGULAR +/- 0.5 DEG.
SURFACE FINISH
ALL DIMENSIONS IN INCH(mm)
DATE: (D/M/Y) 28-03-94
SCALE: N.T.S.
DRAWN: G.L.
APPR. G.C. ENG. L.L. PROD.
TITLE: JOG LEVER OVERALL DIMENSIONS
DRAWING NUMBER: A-721018

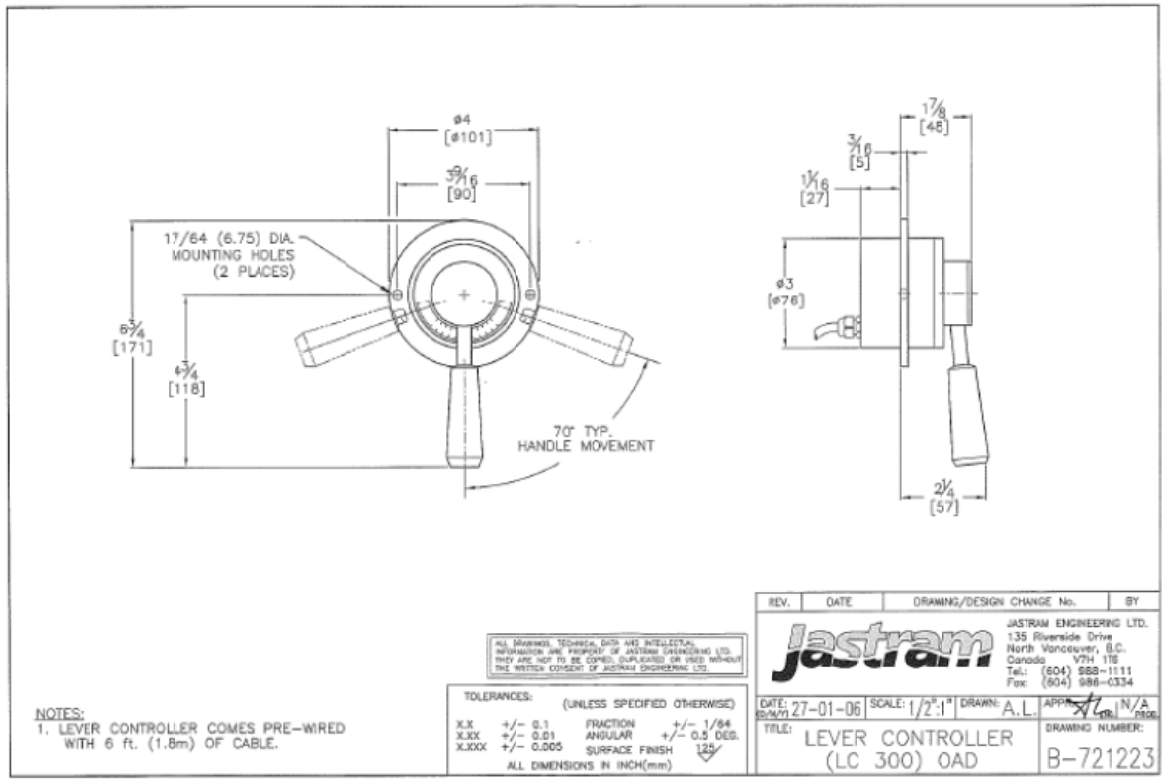

NOTES:
1. LEVER CONTROLLER COMES PRE-WIRED WITH 6 ft. (1.8m) OF CABLE.

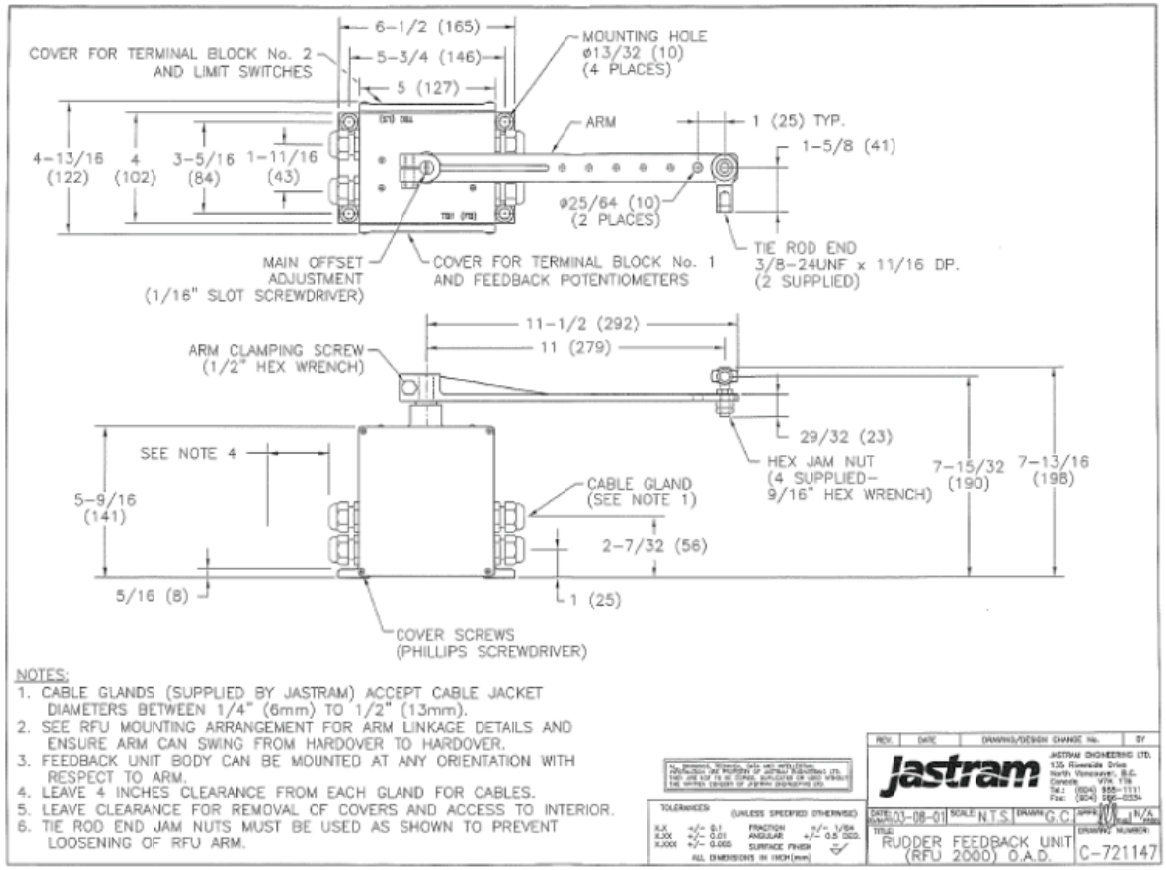
6-1/2 (165)
5-3/4 (146)
5 (127)
COVER FOR TERMINAL BLOCK No. 2 AND LIMIT SWITCHES
MOUNTING HOLE ø13/32 (10) (4 PLACES)
ARM
1 (25) TYP.
1-5/8 (41)
4-13/16 (122)
4 (102)
3-5/16 (84)
1-11/16 (43)
ø25/64 (10) (2 PLACES)
MAIN OFFSET ADJUSTMENT (1/16" SLOT SCREWDRIVER)
COVER FOR TERMINAL BLOCK No. 1 AND FEEDBACK POTENTIOMETERS
TIE ROD END 3/8-24UNF x 11/16 DP. (2 SUPPLIED)
11-1/2 (292)
11 (279)
ARM CLAMPING SCREW (1/2" HEX WRENCH)
29/32 (23)
HEX JAM NUT (4 SUPPLIED- 9/16" HEX WRENCH)
7-15/32 (190)
7-13/16 (198)
SEE NOTE 4
5-9/16 (141)
CABLE GLAND (SEE NOTE 1)
2-7/32 (56)
5/16 (8)
1 (25)
COVER SCREWS (PHILLIPS SCREWDRIVER)
NOTES:
1. CABLE GLANDS (SUPPLIED BY JASTRAM) ACCEPT CABLE JACKET DIAMETERS BETWEEN 1/4" (6mm) TO 1/2" (13mm).
2. SEE RFU MOUNTING ARRANGEMENT FOR ARM LINKAGE DETAILS AND ENSURE ARM CAN SWING FROM HARDOVER TO HARDOVER.
3. FEEDBACK UNIT BODY CAN BE MOUNTED AT ANY ORIENTATION WITH RESPECT TO ARM.
4. LEAVE 4 INCHES CLEARANCE FROM EACH GLAND FOR CABLES.
5. LEAVE CLEARANCE FOR REMOVAL OF COVERS AND ACCESS TO INTERIOR.
6. TIE ROD END JAM NUTS MUST BE USED AS SHOWN TO PREVENT LOOSENING OF RFU ARM.
REV. DATE DRAWING/DESIGN CHANGE No. BY
jastram
JASTRAM ENGINEERING LTD.
135 Riverside Drive
North Vancouver, B.C.
Canada V7H 1T8
Tel: (604) 985-1111
Fax: (604) 986-0334
TOLERANCES (UNLESS SPECIFIED OTHERWISE)
X.X +/- 0.1 FRACTION +/- 1/64
X.XX +/- 0.01 ANGULAR +/- 0.5 DEG.
X.XXX +/- 0.005 SURFACE FINISH
ALL DIMENSIONS IN INCH [mm]
DATE 03-08-01 SCALE N.T.S. DRAWN G.C. APPR. N/A
TITLE RUDDER FEEDBACK UNIT (RFU 2000) O.A.D.
DRAWING NUMBER C-721147

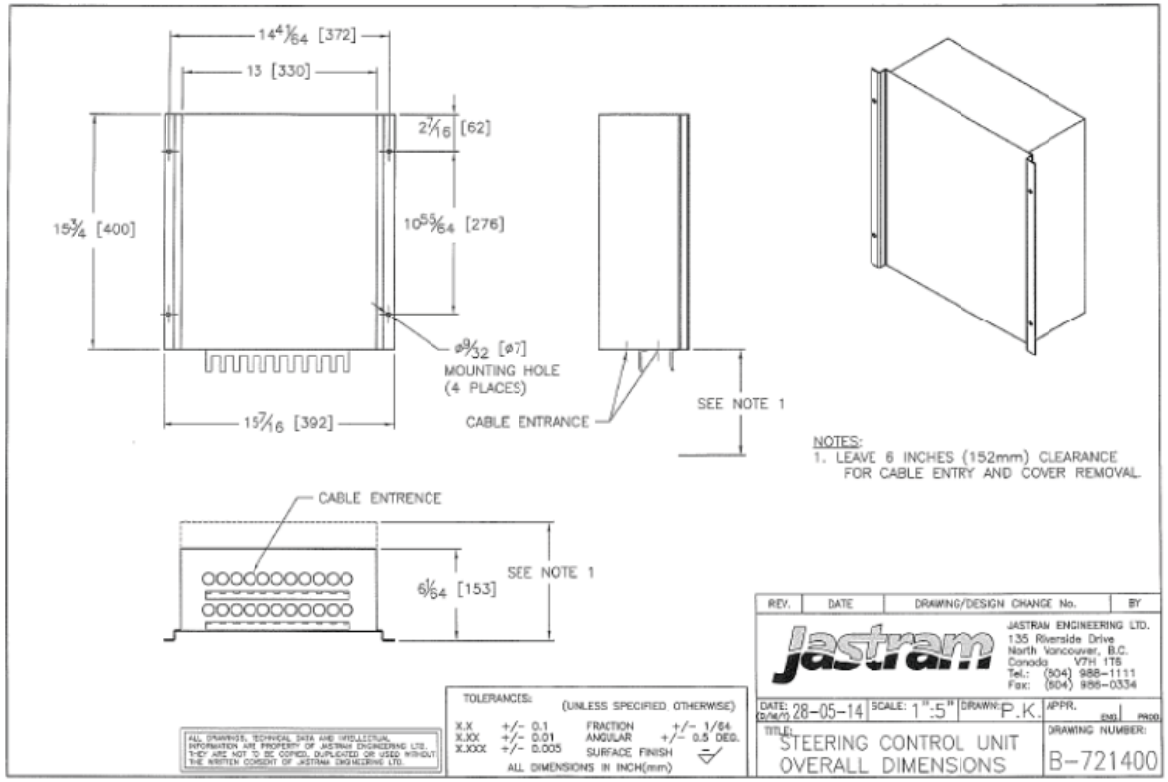
14 41/64 [372]
13 [330]
2 7/16 [62]
15 3/4 [400]
10 55/64 [276]
ø9/32 [ø7]
MOUNTING HOLE
(4 PLACES)
15 7/16 [392]
CABLE ENTRANCE
SEE NOTE 1
NOTES:
1. LEAVE 6 INCHES (152mm) CLEARANCE FOR CABLE ENTRY AND COVER REMOVAL.
CABLE ENTRENCE
6 1/64 [153]
SEE NOTE 1
REV.
DATE
DRAWING/DESIGN CHANGE No.
BY
jastram
JASTRAN ENGINEERING LTD.
135 Riverside Drive
North Vancouver, B.C.
Canada V7H 1T6
Tel.: (604) 988-1111
Fax: (604) 986-0334
DATE: (D/M/Y) 28-05-14
SCALE: 1":5"
DRAWN: P.K.
APPR.
ENG
PROD
TITLE:
STEERING CONTROL UNIT
OVERALL DIMENSIONS
DRAWING NUMBER:
B-721400
TOLERANCES:
(UNLESS SPECIFIED OTHERWISE)
X.X +/- 0.1
X.XX +/- 0.01
X.XXX +/- 0.005
FRACTION +/- 1/64
ANGULAR +/- 0.5 DEG.
SURFACE FINISH
ALL DIMENSIONS IN INCH(mm)
ALL DRAWINGS, TECHNICAL DATA AND INTELLECTUAL INFORMATION ARE PROPERTY OF JASTRAN ENGINEERING LTD. THEY ARE NOT TO BE COPIED, DUPLICATED OR USED WITHOUT THE WRITTEN CONSENT OF JASTRAN ENGINEERING LTD.

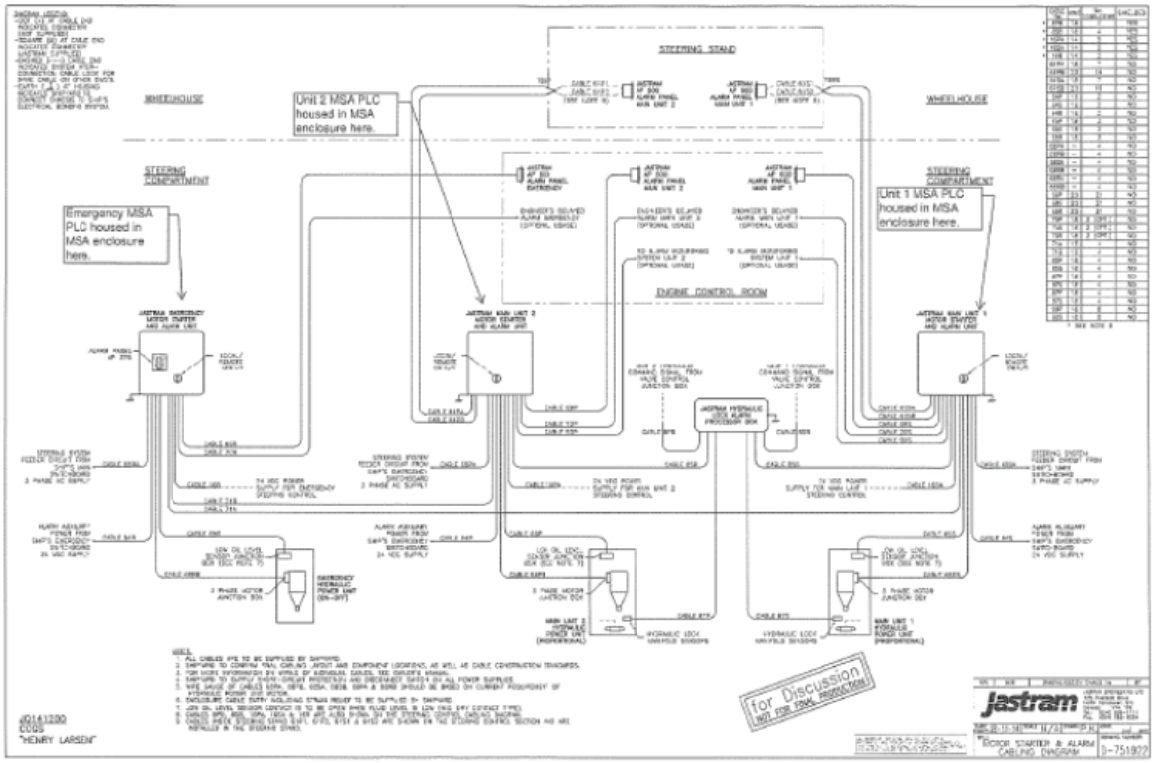
STEERING STAND
WHEELHOUSE
WHEELHOUSE
Unit 2 MSA PLC housed in MSA enclosure here.
STEERING COMPARTMENT
STEERING COMPARTMENT
Emergency MSA PLC housed in MSA enclosure here.
Unit 1 MSA PLC housed in MSA enclosure here.
ENGINE CONTROL ROOM
for Discussion
NOT FOR ISSUE PURPOSES
jastram
MOTOR STARTER & ALARM CABLING DIAGRAM
D-751972
"HENRY LARSEN"

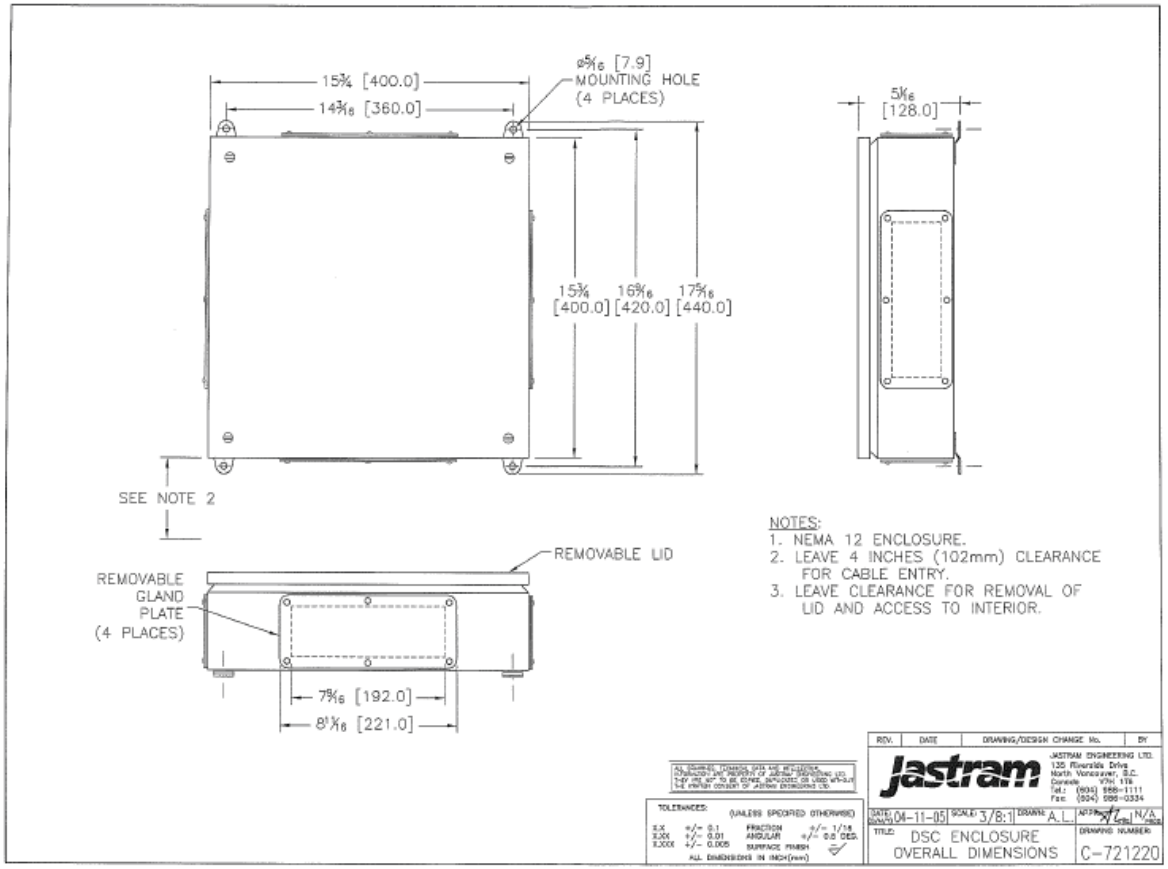
15¾ [400.0]
14⅜ [360.0]
ø5/16 [7.9]
MOUNTING HOLE
(4 PLACES)
15¾ [400.0]
16 5/16 [420.0]
17 5/16 [440.0]
5 1/16 [128.0]
SEE NOTE 2
REMOVABLE LID
REMOVABLE GLAND PLATE (4 PLACES)
7 5/16 [192.0]
8 1/16 [221.0]
NOTES:
1. NEMA 12 ENCLOSURE.
2. LEAVE 4 INCHES (102mm) CLEARANCE FOR CABLE ENTRY.
3. LEAVE CLEARANCE FOR REMOVAL OF LID AND ACCESS TO INTERIOR.
TOLERANCES: (UNLESS SPECIFIED OTHERWISE)
X.X +/- 0.1
X.XX +/- 0.01
X.XXX +/- 0.005
FRACTION +/- 1/16
ANGULAR +/- 0.5 DEG.
SURFACE FINISH
ALL DIMENSIONS IN INCH(mm)
REV. DATE DRAWING/DESIGN CHANGE No. BY
jastram
JASTRAM ENGINEERING LTD.
135 Riverside Drive
North Vancouver, B.C.
Canada V7H 1T8
Tel: (604) 986-1111
Fax: (604) 986-0334
DATE: 04-11-05
SCALE: 3/8:1
DRAWN: A.L.
N/A
TITLE: DSC ENCLOSURE OVERALL DIMENSIONS
DRAWING NUMBER: C-721220

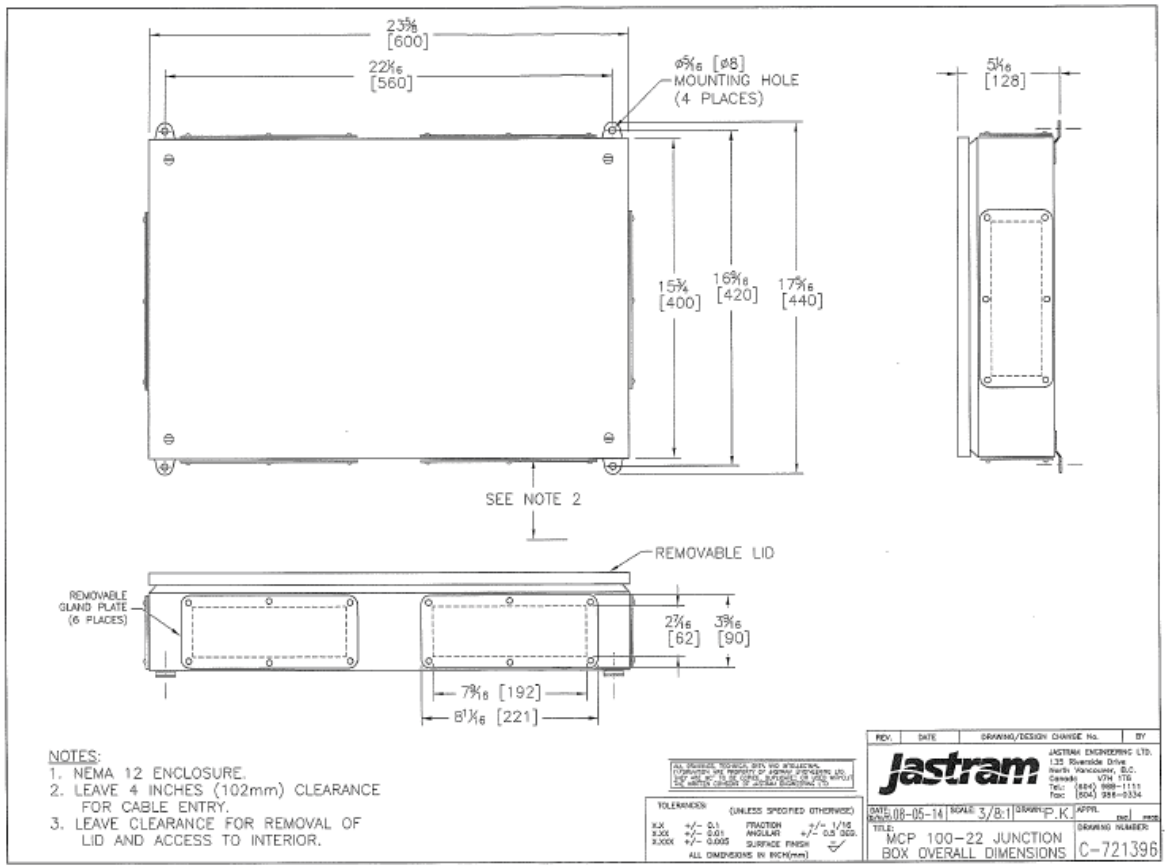
23 3/8 [600]
22 1/16 [560]
ø5/16 [ø8] MOUNTING HOLE (4 PLACES)
5 1/16 [128]
15 3/4 [400]
16 9/16 [420]
17 5/16 [440]
SEE NOTE 2
REMOVABLE LID
REMOVABLE GLAND PLATE (6 PLACES)
2 7/16 [62]
3 5/16 [90]
7 9/16 [192]
8 11/16 [221]
NOTES:
1. NEMA 12 ENCLOSURE.
2. LEAVE 4 INCHES (102mm) CLEARANCE FOR CABLE ENTRY.
3. LEAVE CLEARANCE FOR REMOVAL OF LID AND ACCESS TO INTERIOR.
REV. | DATE | DRAWING/DESIGN CHANGE No. | BY
jastram
JASTRAM ENGINEERING LTD.
1.35 Riverside Drive
North Vancouver, B.C.
Canada V7H 1T6
Tel: (604) 988-1111
Fax: (604) 988-0334
TOLERANCES (UNLESS SPECIFIED OTHERWISE)
X.X +/- 0.1 FRACTION +/- 1/16
X.XX +/- 0.01 ANGULAR +/- 0.5 DEG.
X.XXX +/- 0.005 SURFACE FINISH
ALL DIMENSIONS IN INCH(mm)
DATE 08-05-14
SCALE 3/8:1
DRAWN P.K.
APPR.
TITLE: MCP 100-22 JUNCTION BOX OVERALL DIMENSIONS
DRAWING NUMBER: C-721396

Appendix L GPS/DGPS

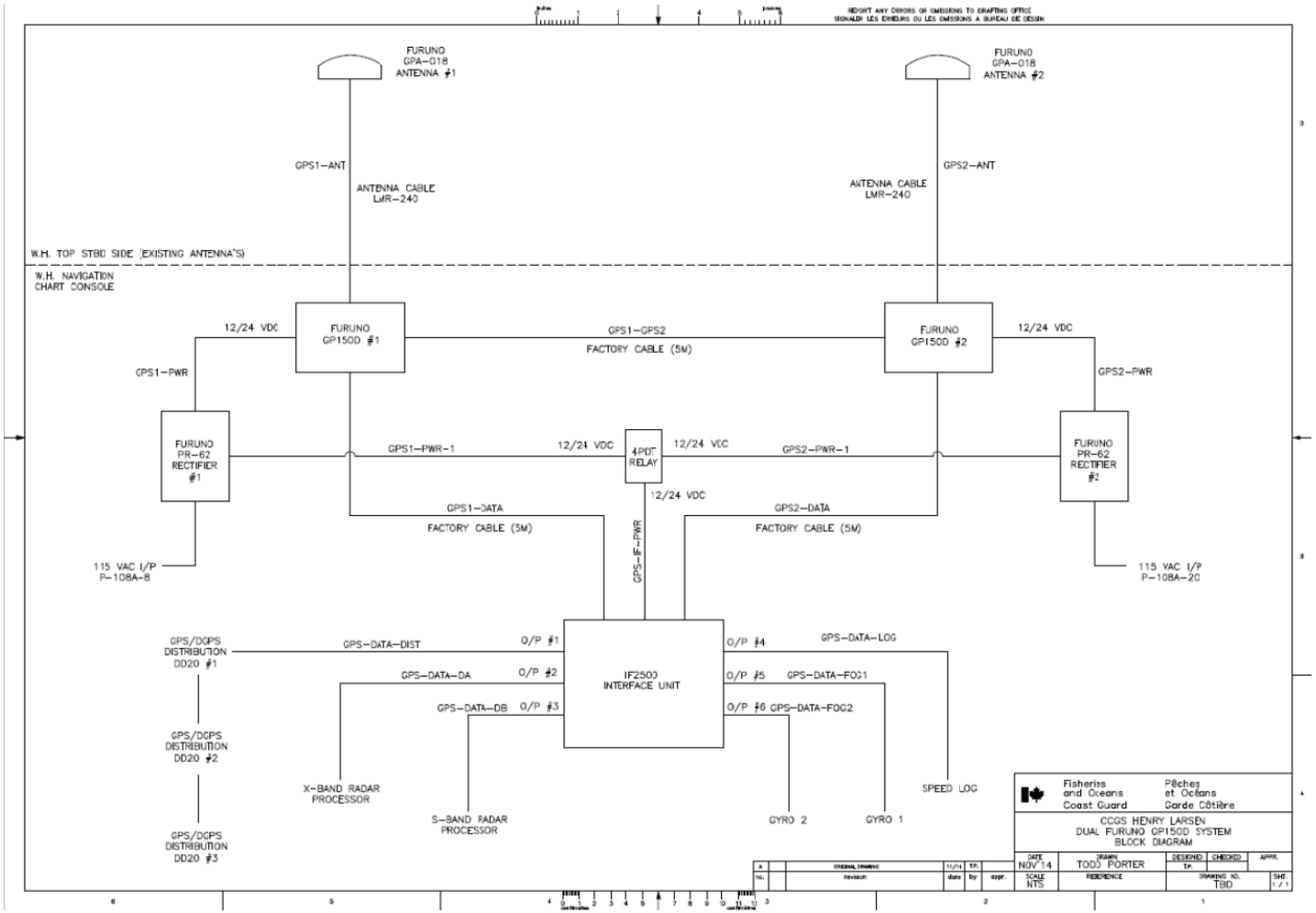
REPORT ANY ERRORS OR OMISSIONS TO DRAFTING OFFICE
SIGNALER LES ERREURS OU LES OMISSIONS A BUREAU DE DESIGN
FURUNO GPA-018 ANTENNA #1
FURUNO GPA-018 ANTENNA #2
GPS1-ANT
ANTENNA CABLE LMR-240
GPS2-ANT
ANTENNA CABLE LMR-240
W.H. TOP STBD SIDE (EXISTING ANTENNA'S)
W.H. NAVIGATION CHART CONSOLE
12/24 VDC
FURUNO GP150D #1
GPS1-GPS2
FACTORY CABLE (5M)
FURUNO GP150D #2
12/24 VDC
GPS1-PWR
GPS2-PWR
FURUNO PR-62 RECTIFIER #1
GPS1-PWR-1
12/24 VDC
4PDT RELAY
12/24 VDC
GPS2-PWR-1
FURUNO PR-62 RECTIFIER #2
12/24 VDC
GPS1-DATA
FACTORY CABLE (5M)
GPS-IF-PWR
GPS2-DATA
FACTORY CABLE (5M)
115 VAC I/P P-108A-8
115 VAC I/P P-108A-20
GPS/DGPS DISTRIBUTION DD20 #1
GPS-DATA-DIST
O/P #1
O/P #4
GPS-DATA-LOG
GPS-DATA-DA
O/P #2
IF2500 INTERFACE UNIT
O/P #5
GPS-DATA-FOG1
GPS-DATA-DB
O/P #3
O/P #6
GPS-DATA-FOG2
GPS/DGPS DISTRIBUTION DD20 #2
X-BAND RADAR PROCESSOR
S-BAND RADAR PROCESSOR
GYRO 2
GYRO 1
SPEED LOG
GPS/DGPS DISTRIBUTION DD20 #3
Fisheries and Oceans Coast Guard
Pêches et Océans Garde Côtière
CCGS HENRY LARSEN
DUAL FURUNO GP150D SYSTEM
BLOCK DIAGRAM
DATE NOV'14
DRAWN TODD PORTER
DESIGNED T.P.
CHECKED
APPR.
SCALE NTS
REFERENCE
DRAWING NO. TBD
SHT. 1 / 1
ORIGINAL DRAWING
11/14
T.P.
revision
date
by
appr.

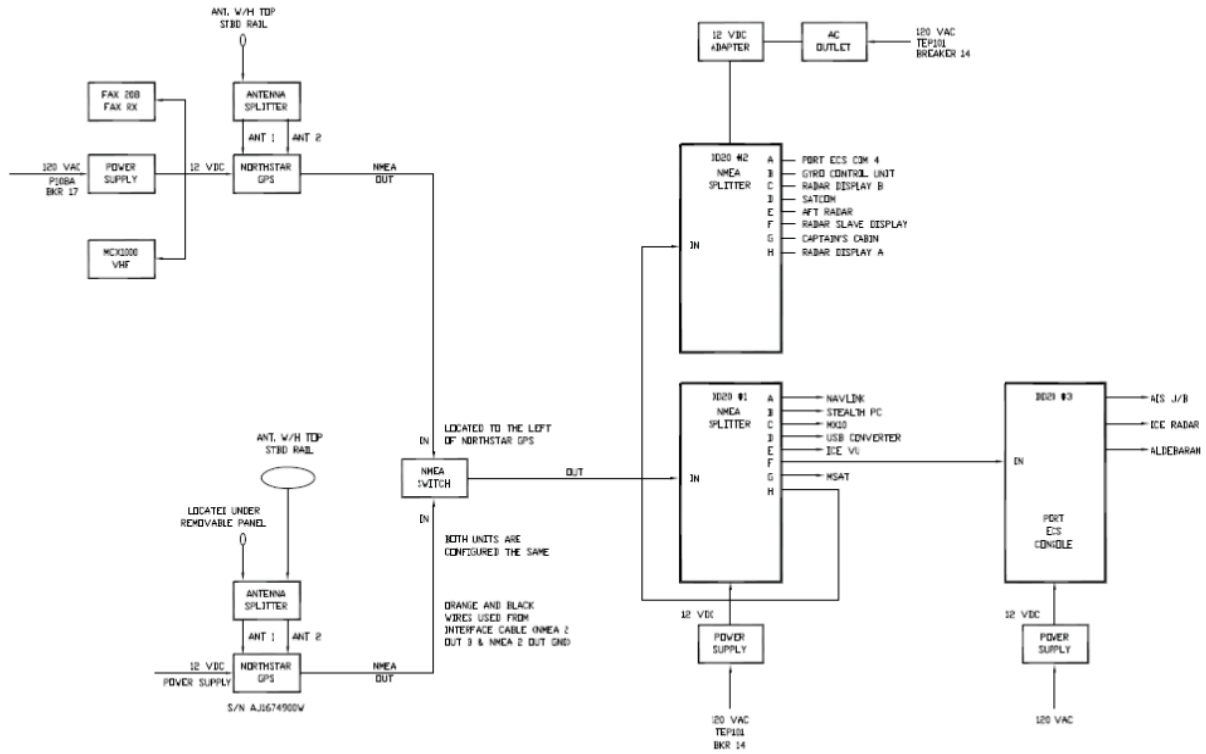

Fisheries and Oceans Coast Guard — Pêches et Océans Garde côtière

drawing title—dessin titre: GPS SYSTEMS BLOCK DIAGRAM

drawn—dessiné: E. CARROLL
designed — dessiné par: TONY MORRISSEY
approved—approuvé:

no.	revision	date	by	appr.
C	DRAWING REVISED	10/06	EC	
B	DRAWING REVISED	04/05	EC	
A	ORIGINAL ISSUE			

site: C.C.G.S. HENRY LARSEN

scale—échelle: N.T.S.
date—date: JULY/3/01
project no.
drawing no.—no du dessin: 65410601
sheet — feuille: 1/1

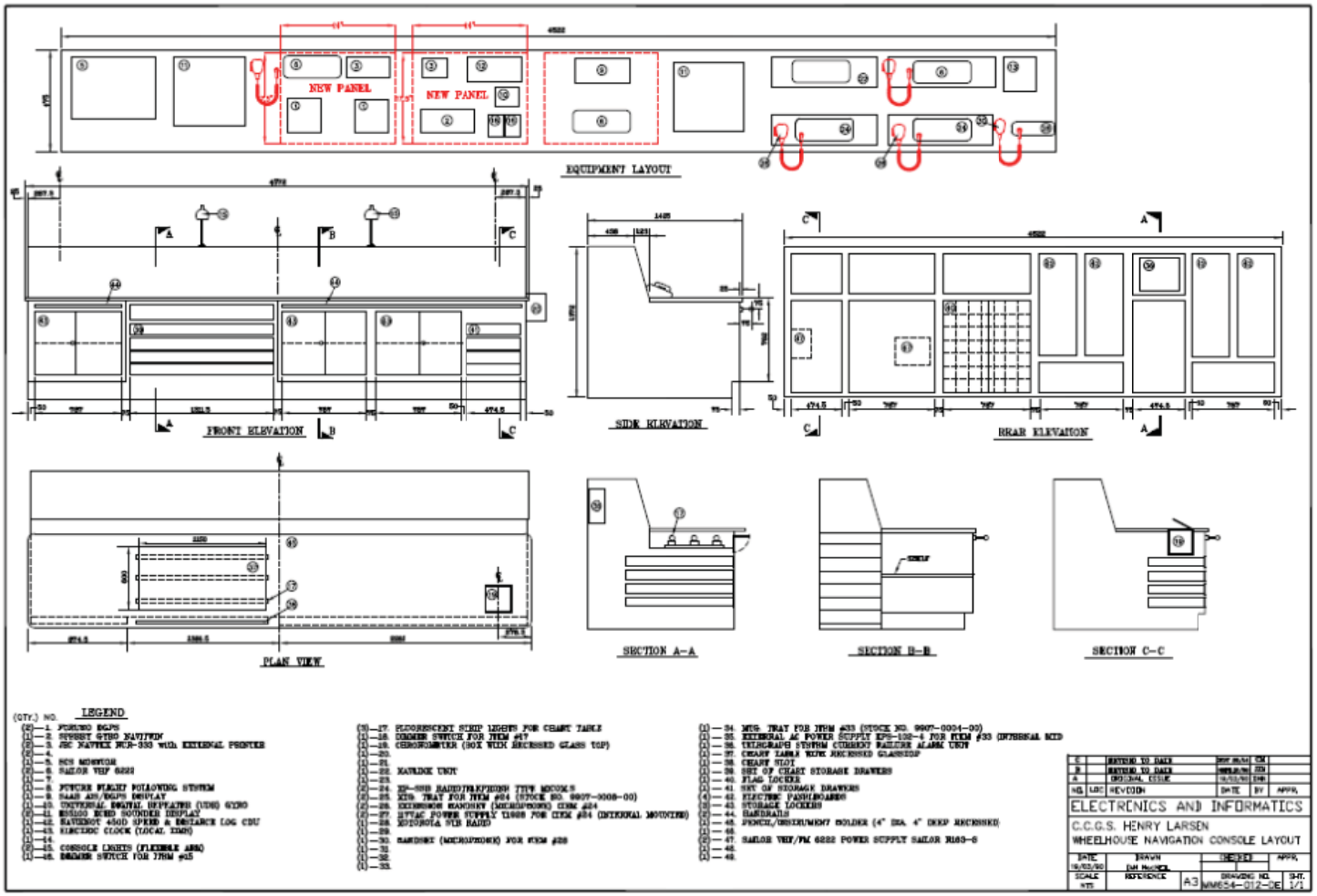
NEW PANEL
NEW PANEL
EQUIPMENT LAYOUT
FRONT ELEVATION
SIDE ELEVATION
REAR ELEVATION
PLAN VIEW
SECTION A–A
SECTION B–B
SECTION C–C
LEGEND
ELECTRONICS AND INFORMATICS
C.C.G.S. HENRY LARSEN
WHEELHOUSE NAVIGATION CONSOLE LAYOUT

TWO PANELS TO BE 24" WIDE x 17.5" HIGH ALUMINUM PANELS 1/8" THICK. CONTRACTOR SHALL CUT THESE PANELS AND FIT THE EQUIPMENT ABOVE. OVERALL CONSOLE WILL HAVE TO BE CUT TO FIT INDIVIDUAL PANELS IN THE SPACE. PANELS SHALL BE PRIMED AND PAINTED TO MATCH EXISTING. THIS DRAWING IS ONLY TO BE USED AS A GUIDE TO SHOW EQUIPMENT LAYOUT. FINAL FITTING TO BE DETERMINED ONSITE WITH TECHNICAL REPRESENTATIVE