GENERAL NOTES:

1. ALL DIMENSIONS IN MILLIMETRES.
2. ALL SOUNDINGS & ELEVATIONS IN METRES.

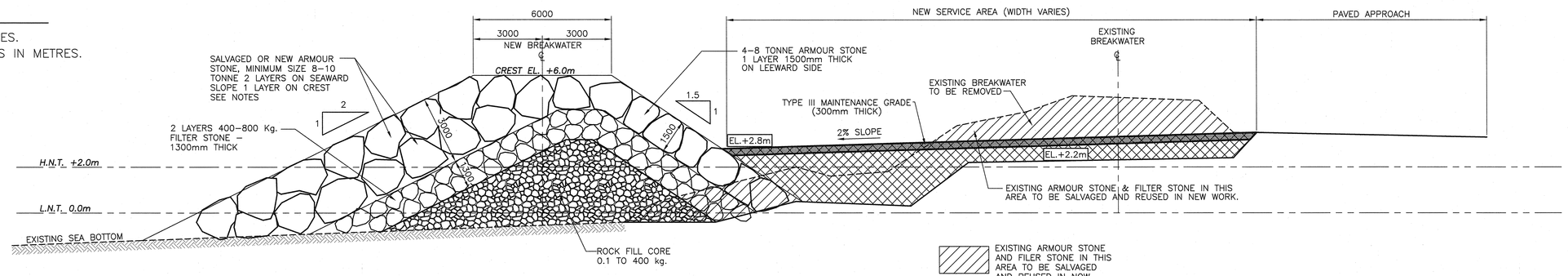

NEW SECTION A 2|3

SCALE : 1:100

0m 1m 2m 3m 4m 5m 6m 7m 8m 9m 10m

EXISTING ARMOUR STONE AND FILER STONE IN THIS AREA TO BE SALVAGED AND REUSED IN NOW WORK

ROCK AND GRAVEL FILL AS REQUIRED TO BRING THIS AREA TO THE SPECIFIED GRADE

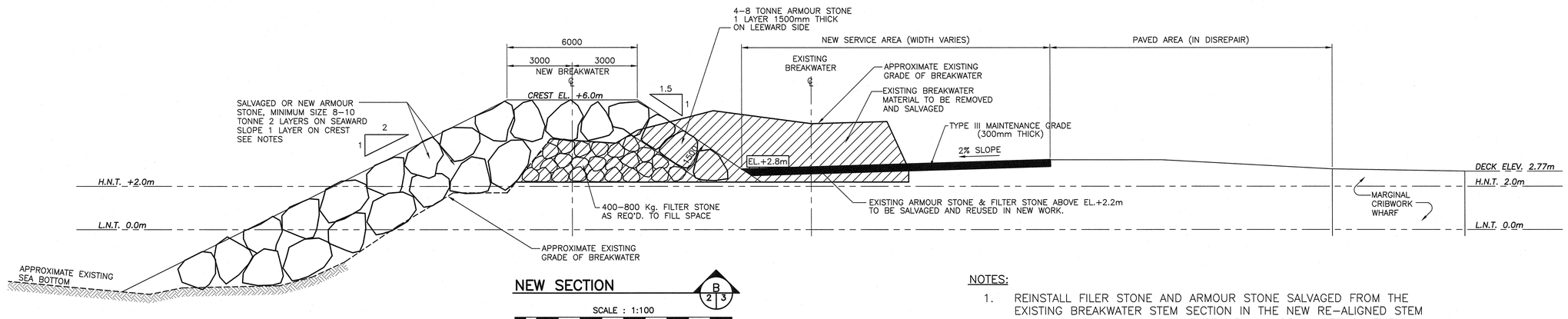

NEW SECTION B 2|3

SCALE : 1:100

0m 1m 2m 3m 4m 5m 6m 7m 8m 9m 10m

NOTES:

1. REINSTALL FILER STONE AND ARMOUR STONE SALVAGED FROM THE EXISTING BREAKWATER STEM SECTION IN THE NEW RE–ALIGNED STEM SECTION. THE LARGER ARMOUR STONE WILL BE PLACED ON THE SEAWARD SLOPE OF THE NEW STRUCTURES. START MATERIAL PLACEMENT FROM THE SOUTHWEST AND PROCEED NORTHEASTWARD UNTIL ALL SALVAGED MATERIAL IS USED
2. EXACT LAYER THICKNESS OF SALVAGED ROCK MAY VARY FROM THAT SHOWN.
3. RELOCATE AND ADJUST EXISTING ARMOUR STONE AND FILTER STONE ON EXISTING STRUCTURE AS REQUIRED TO ENSURE THE NEW MATERIAL IN INCORPORATED INTO THE WORK SUCH THAT THE ENTIRE STRUCTURE IS BONDED TOGETHER AND CONSOLIDATED AS MUCH AS POSSIBLE
4. INSTALL 150mm THICK MAINTENANCE MATERIAL OVER NEW SERVICE AREA TO FINISH GRADE.

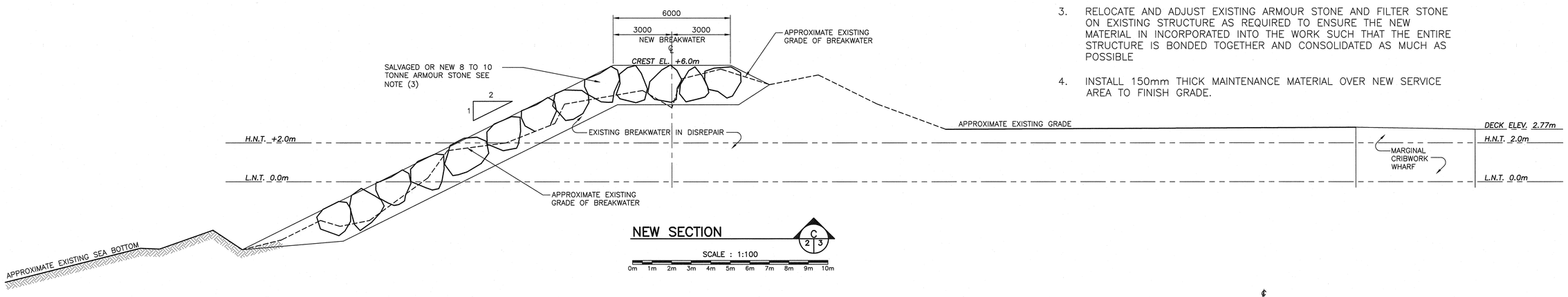

NEW SECTION C 2|3

SCALE : 1:100

0m 1m 2m 3m 4m 5m 6m 7m 8m 9m 10m

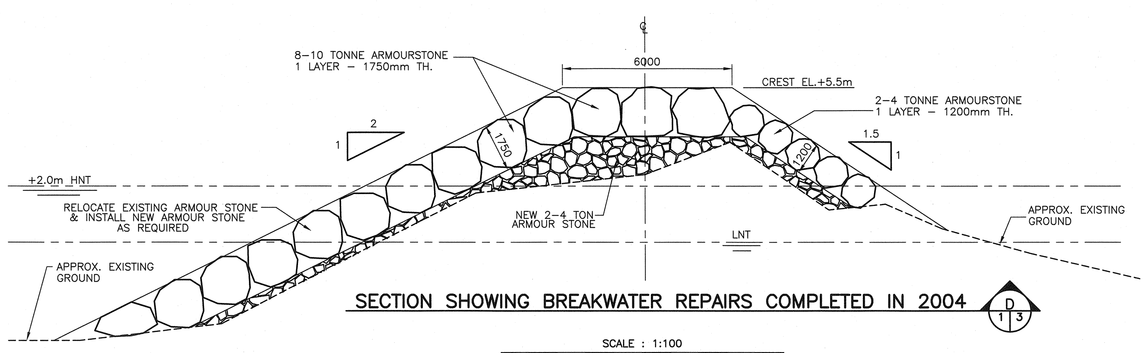

SECTION SHOWING BREAKWATER REPAIRS COMPLETED IN 2004 D 1|3

SCALE : 1:100

0m 1m 2m 3m 4m 5m 6m 7m 8m 9m 10m

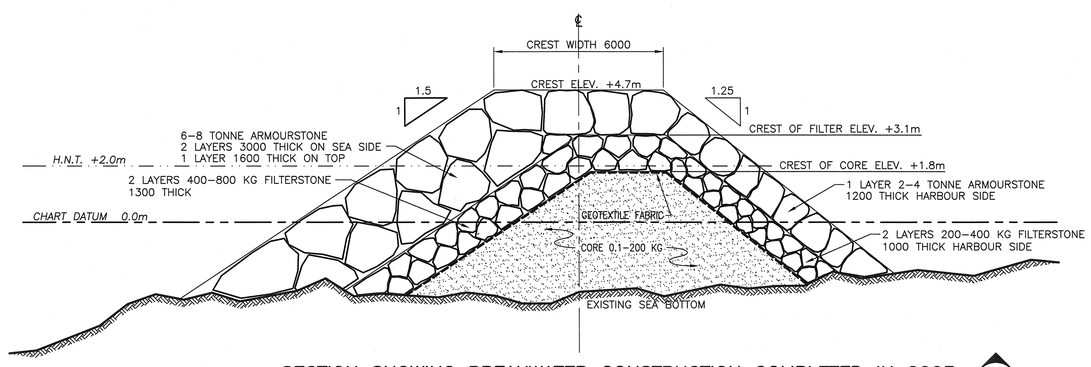

SECTION SHOWING BREAKWATER CONSTRUCTION COMPLETED IN 2003 E 1|3

SCALE : 1:100

0m 1m 2m 3m 4m 5m 6m 7m 8m 9m 10m

Public Works and Government Services Canada / Travaux Publics et Services gouvernementaux Canada

revisions		date

project / projet

BREAKWATER REALIGNMENT

RIVER OF PONDS, NL

drawing / dessin

SECTIONS

designed / conçu: P. D.
date: JUNE 2013
drawn / dessiné: ED. BEARNS
date: MARCH 2015
approved / approuvé: Ed. Bearns
date: 16 April 2015
Tender / Soumission
PWGSC Project Manager / Administrateur de projets TPSGC

project number / no. du projet: R.076510.001

drawing no. / no. du dessin: 3 OF 3