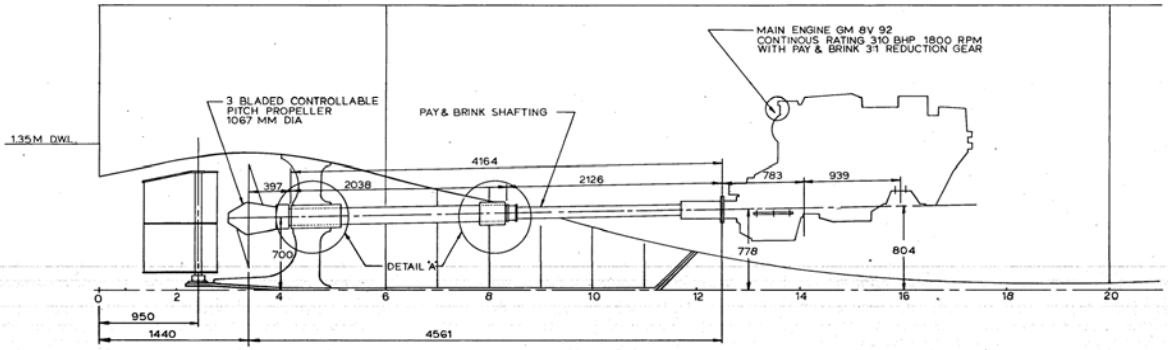

SCALE-1:20

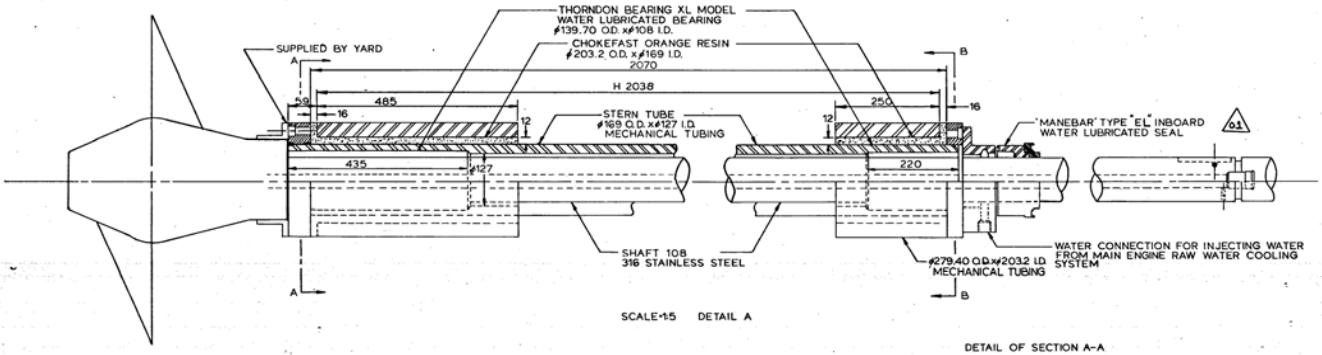

SCALE-1:5 DETAIL A

NOTES: 1) ALL MATERIAL EXCEPT NOTED WILL BE MILD STEEL.

2) GEARBOX, COUPLING, SHAFTING & C.P PROPELLER ARE PROVIDED BY PAY & BRINK. RELATED DRAWING WILL BE SUBMITTED BY THE MANUFACTURER

SECTION A-A

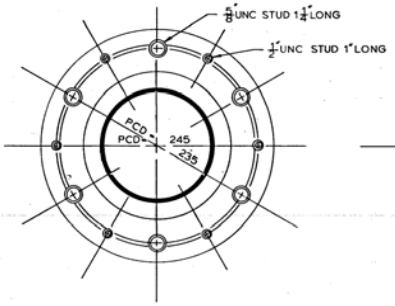

SECTION B-B

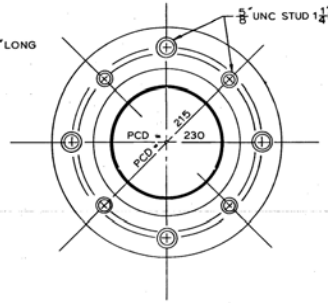

DETAIL OF SECTION A-A

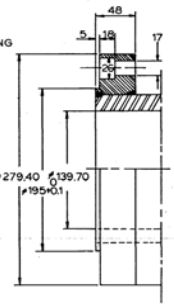

DETAIL OF SECTION B-B

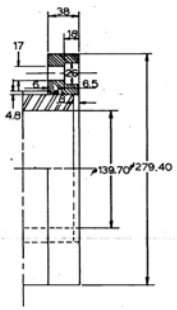

SCALE-1:25

Rev. No.	Révisions	Date
02	MANEBAR TYPE "E.S" TO BE REPLACED BY MANEBAR TYPE "EL"	90-02
App'd/App'n Date		

Contractor Entrepreneur: **BRETON INDUSTRIAL & MARINE LTD.**
PORT HAWKESBURY NOVA SCOTIA

Canadian Coast Guard / Garde côtière canadienne

Vessel Navire: 300 NAV. AIDS & 'F' UTILITIES

Drg. Title Desig. titre: ILE SAINT OURS

SHAFTING ARRANGEMENT

Date: 85/11 | Scale/Echelle: AS SHOWN | Rev. 1

Contractor Drg. No. Entrepreneur Dess. N°: 42-83-505

CCG Dwg. No. N° dess. 300-83-505

THIS DRAWING REMAINS THE PROPERTY OF BRETON INDUSTRIAL & MARINE LTD. AND IT SHALL NOT BE COPIED, DUPLICATED, G VEN OUT OR SENT WITHOUT THEIR PRIOR CONSENT.